TECHNICAL MANUAL

FOR

CESIUM BEAM TUBE FREQUENCY STANDARD

FEI MODEL FE-5440A

(MASTER REGULATING CLOCK TD-1251/U)

FREQUENCY ELECTRONICS

TECHNICAL MANUAL

FOR

CESIUM BEAM TUBE FREQUENCY STANDARD

FEI MODEL FE-5440A

(MASTER REGULATING CLOCK TD-1251/U)

FREQUENCY ELECTRONICS, INC.

NEW HYDE PARK, NEW YORK, 11040

Printed in U.S.A.

A7903-FOR (6/69)

TECHNICAL MANUAL

SERVICE, CIRCUIT DIAGRAMS
AND ILLUSTRATED PARTS BREAKDOWN

MASTER REGULATING CLOCK TD-1251/U

PN 583R784H01 NSN 5820-01-063-0399ZX

WESTINGHOUSE ELECTRIC CORPORATION
F19628-76-C-0117

PUBLISHED UNDER AUTHORITY OF THE SECRETARY OF THE AIR FORCE

AIR FORCE (3) JULY 18, 1979--300--ORIGINAL

1 DECEMBER 1978

LIST OF EFFECTIVE PAGES

INSERT LATEST CHANGED PAGES. DESTROY SUPERSEDED PAGES.

NOTE: The portion of the text affected by the changes is indicated by a vertical line in the outer margins of the page. Changes to illustrations are indicated by miniature pointing hands. Changes to wiring diagrams are indicated by shaded areas.

Dates of issue for original and changed pages are: Original ... 0 ... 1 Dec 78

TOTAL NUMBER OF PAGES IN THIS PUBLICATION IS 366, CONSISTING OF THE FOLLOWING:

Page No.	* Change No.	Page No.	Change No.	Page No.	Change No.
Title	0	8-3	0	8-36 Blank	0
A - B	0	8-4 Blank	0	8-37	0
C Blank	0	8-5	0	8-38 Blank	0
i - vii	0	8-6 Blank	0	8-39	0
viii Blank	0	8-7	0	8-40 Blank	0
ix	0	8-8 Blank	0	8-41	0
x Blank	0	8-9	0	8-42 Blank	0
xi	0	8-10 Blank	0	8-43	0
1-0 - 1-15	0	8-11	0	8-44 Blank	0
1-16 Blank	0	8-12 Blank	0	8-45	0
2-1 - 2-6	0	8-13	0	8-46 Blank	0
3-1 - 3-6	0	8-14 Blank	0	8-47	0
4-1 - 4-8	0	8-15	0	8-48 Blank	0
5-1 - 5-23	0	8-16 Blank	0	8-49	0
5-24 Blank	0	8-17	0	8-50 Blank	0
6-1 - 6-60	0	8-18 Blank	0	8-51	0
7-1 - 7-25	0	8-19	0	8-52 Blank	0
7-26 Blank	0	8-20 Blank	0	8-53	0
7-27 - 7-45	0	8-21	0	8-54 Blank	0
7-46 Blank	0	8-22 Blank	0	8-55	0
7-47 - 7-49	0	8-23	0	8-56 Blank	0
7-50 Blank	0	8-24 Blank	0	8-57	0
7-51 - 7-53	0	8-25	0	8-58 Blank	0
7-54 Blank	0	8-26 Blank	0	8-59	0
7-55 - 7-59	0	8-27	0	8-60 Blank	0
7-60 Blank	0	8-28 Blank	0	8-61	0
7-61 - 7-65	0	8-29	0	8-62 Blank	0
7-66 Blank	0	8-30 Blank	0	8-63	0
7-67 - 7-87	0	8-31	0	8-64 Blank	0
7-88 Blank	0	8-32 Blank	0	8-65	0
7-89 - 7-99	0	8-33	0	8-66 Blank	0
7-100 Blank	0	8-34 Blank	0	8-67	0
7-101 - 7-110	0	8-35	0	8-68 Blank	0
8-1	0				
8-2 Blank	0				

* Zero in this column indicates an original page.

USAF

LIST OF EFFECTIVE PAGES (Continued)

INSERT LATEST CHANGED PAGES. DESTROY SUPERSEDED PAGES.

NOTE: The portion of the text affected by the changes is indicated by a vertical line in the outer margins of the page. Changes to illustrations are indicated by miniature pointing hands. Changes to wiring diagrams are indicated by shaded areas.

Page No.	* Change No.	Page No.	* Change No.	Page No.	* Change No.
8-69	0				
8-70 Blank	0				
8-71	0				
8-72 Blank	0				
8-73	0				
8-74 Blank	0				
8-75	0				
8-76 Blank	0				
8-77	0				
8-78 Blank	0				
8-79 - 8-105	0				
8-106 Blank	0				
Index 1 - Index 13	0				
Index 14 Blank	0				

* Zero in this column indicates an original page.

USAF

TABLE OF CONTENTS

NOTE

An alphabetical index is located at the back of this manual. The introduction (preceding Section I) explains the material covered in each section.

TABLE OF CONTENTS - Continued

TABLE OF CONTENTS - Continued

LIST OF ILLUSTRATIONS

LIST OF ILLUSTRATIONS-Continued

LIST OF ILLUSTRATIONS-Continued

LIST OF TABLES

INTRODUCTION

This manual provides service instructions, circuit diagrams and an illustrated parts breakdown for the Master Regulating Clock TD-1251/U (MRC) and is arranged as follows. Chapter 1 gives general information about the MRC. The equipment is illustrated and described, and leading particulars, capabilities, limitations, and special tools and test equipment are listed. Chapter 2 covers installation followed by preparation for use and reshipment instructions in Chapter 3. Operation is the subject of Chapter 4 which covers controls and indicators and normal and emergency operating instructions. Chapter 5 covers theory of operation at the system functional level and at the functional circuit level. Maintenance instructions are provided in Chapter 6 organized under three section headings: organizational and intermediate maintenance, special maintenance, and performance test checks. Chapter 7 contains the illustrated parts breakdown. Circuit diagrams are included in Chapter 8 and consist of functional block diagrams, unit schematic diagrams, and an interconnecting wire run list. The manual ends with an alphabetical index.

PRECAUTIONARY NOTES

REPAIR PROCEDURE PRECAUTIONS. The following precautions must be observed during repair.

a. Replace faulty components with exact duplicates as identified in the appropriate Illustrated Parts Breakdown (IPB).

b. Do not change the location or manner of termination of grounds, and do not alter the layout of wiring, cables, or harnesses.

c. After any repair action involving grounds or shields, test by continuity check for proper isolation between the ground involved and other equipment grounds.

REASSEMBLY PROCEDURE PRECAUTIONS. During reassembly of the following, precautions must be taken.

a. Shields. Inspect as follows and replace if faulty.

(1) RF gaskets. All closures with rf gaskets must have continuous contact with the gasket along the contact surface. These gaskets are made of a conductive rubber compound and must be checked for resiliency, freedom from dirt, a uniformly smooth surface, and lack of other deterioration. Metal surfaces that mate with the gaskets should not be deformed, dirty, corroded, or scratched.

(2) Finger stock. No spring fingers should be missing, cracked, or corroded.

b. Structural Integrity. The following drawer components must be securely and properly fastened to their respective chassis in accordance with T.O. 31-1-75.

(1) Covers.

(2) Front panels.

(3) Large subassemblies, such as the power supply modules.

(4) Gaskets.

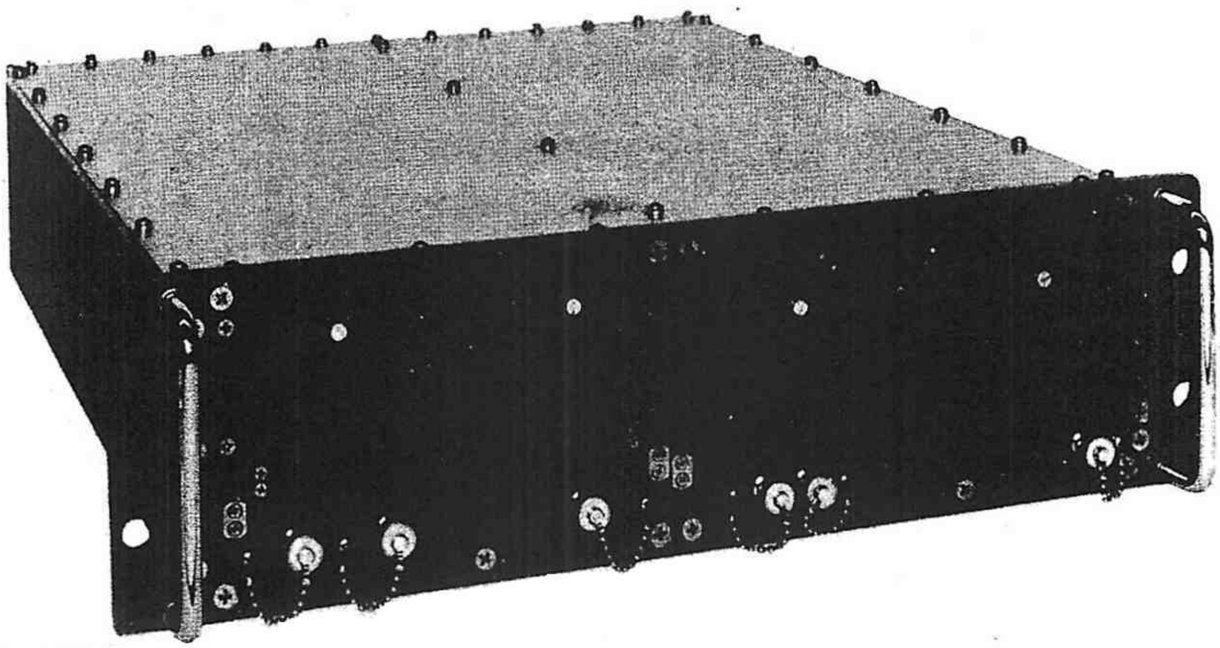

4458-PF-001A

Figure 1-1. Master Regulating Clock, TD-1251/U

CHAPTER 1

GENERAL INFORMATION

1-1. INTRODUCTION. This chapter provides general information about the MRC of interest to operation and maintenance activities. The equipment is illustrated and described and various informative tables and data lists are given.

1-2. DESCRIPTION AND PURPOSE. The MRC, shown in figure 1-1, is a portable equipment that combines an atomic frequency standard and a real time-of-day clock in a single self-contained instrument. The MRC finds application in the 487L system as part of Radio Receiver Transmitter Set AN/FRC-117 equipment and as part of Airborne Communications System AN/ARC-96 equipment. The atomic frequency standard part of the MRC outputs reference frequencies at 5 MHz, and 1 MHz which are available through front and rear panel connectors, and 3 MHz available through the rear panel. The real time-of-day clock includes a front panel LED time display in hours, minutes, and seconds. In addition, the real time-of-day clock provides timing information in the form of 1 PPS and 1 PPM outputs which are available through front panel connectors. Real-time data are available through rear panel connector P1. All outputs are referenced to an atomic clock primary frequency standard built into the MRC. The atomic clock as a standard is based on the constancy of one of the several natural resonant frequencies of one isotope of the Cesium atom, (Specifically the frequency is 9,192,631,771.39 Hz for Cesium 133.)

NOTE

Throughout this manual, this frequency will be abbreviated as 9.19 + GHz.

a. In the MRC, a frequency of 14,591,479.0022 Hz (abbreviated 14.59 + MHz) is generated by an oven-controlled, voltage-controlled, crystal oscillator in a primary closed-loop control circuit (primary loop). A Cesium beam resonator (atomic standard) is used to stabilize the 14.59 + MHz primary loop frequency. The 14.59 + MHz primary loop output is then synthesized in a secondary loop which is phase-locked to the primary loop. All MRC outputs are then derived from the secondary loop. The result is that all outputs generated retain the accuracy and stability factors inherent in the primary loop frequency which is locked to the atomic standard. In the MRC, the output frequencies are accurate to ±3 pp10^{11} with a long-term stability of ±1 pp10^{11}.

b. The MRC can operate from a 115 V ac or 230 V ac (47 to 460 Hz), single phase power source; from an external 22 to 30 V dc power source; or from an internal battery. Simultaneous connection to both ac and external dc power sources may be made. In this case, operation is from the ac source as first priority, the external dc source as second priority, with last priorty being the internal battery. Front panel indicators advise of input power availability, power source in use, and charging status of the internal battery.

c. When the two front panel cover doors of the MRC are unfastened and opened, access is provided to two groups of auxiliary controls and indicators. (See figure 4-1.) The controls and indicators under the right door are for the atomic frequency standard. The controls and indicators under the left door are for the real time-of-day clock. The rear panel (figure 1-2) contains the ac and dc power connector (P1), a signal connector (P2), fuses and spares, and thumbwheel frequency control switches (A7S1) under a hinged cover door.

d. On removing the top and bottom cover plates as shown in figures 1-3 and 1-4, easy access is afforded to all modules and components.

1-3. LEADING PARTICULARS. Leading particulars for the MRC are compiled in table 1-1.

Table 1-1. Leading Particulars

Nomenclature	Master Regulating Clock TD-1251/U	
Common Name	MRC	
System Application	487L; P/O Radio Receiver Transmitter Set AN/FRC-117 P/O Airborne Communications System AN/ARC-96, and Electronic Systems Test Set AN/URM-202.	
Primary Power Requirements	115 or 230 V ac (±10%, 47 to 460 Hz, single phase power at 185 watts maximum, 22 to 30 V dc at 63 watts maximum (external power source), or internal standby battery power supply	
Power Priority (when connected simultaneously to ac, external dc and internal battery) . .	First priority - ac power Second priority - external dc power Third priority - internal battery power	
Power Consumption:		
	115 V ac	24 V dc
During Warmup Only	75 W	15 W
Frequency Time Standard Only . .	60 W	45 W
Standby Battery Only (Trickle Charge) .	6 W	3 W
Standby Battery Only (Normal Charge) .	50 W	3 W

Table 1-1. Leading Particulars-Continued

Standby Battery:	
Battery Capacity	1 hour/25°C (77°F)
	1/2 hour/-28°C, +55°C (-17.6°F, +131°F)
Charging Rate	16 hours
Battery Switchover	Automatic
Dimensional Data:	
Width	19 inches (nominal)
Height	5-1/4 inches (nominal)
Depth	22-3/4 inches (nominal)
Weight	60 pounds
Transportability	Portable
Type of Mounting	Bench or 19-inch rack mount (requires 22-inch depth behind panel)
Storage Temperature Conditions	-62°C to +75°C (-79.6°F to +167°F) without batteries
	-40°C to +65°C (-40°F to +149°F) with batteries

CAUTION

To store MRC with batteries at +35°C (+95°F) or higher, VAC-ION pump must be energized either by energizing complete MRC normally or in STORAGE mode.

MRC should never be left de-energized when storing at temperatures above 35°C (95°F).

Table 1-1. Leading Particulars-Continued

Setup Time	No special preparation required if stored for less than 4 months. If stored for 4 months or more, unit must be operated for at least 6 hours before specifications can be met.
Storage Period	After each 4 months of storage, remove from storage and operate for 6 hours minimum. Requires 20 minutes warmup time at -28°C (-17.6°F) ambient and above.

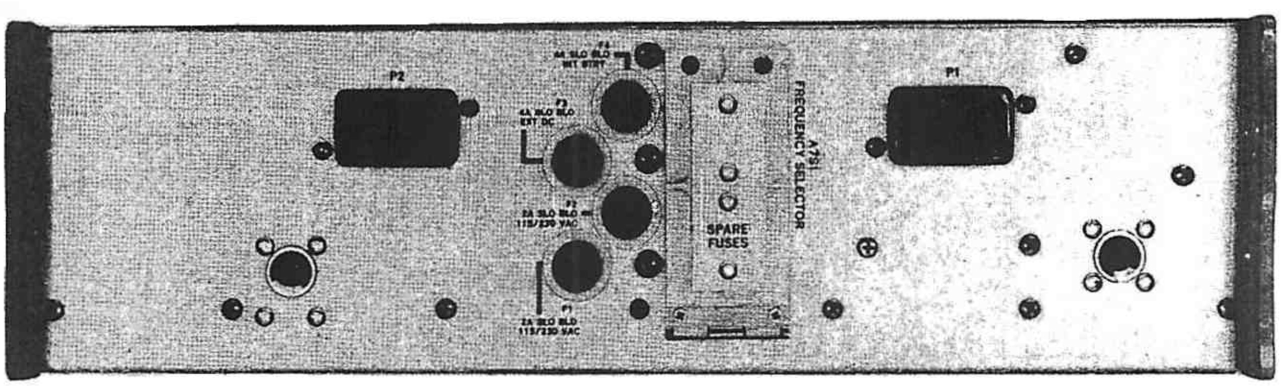

4458-PF-002A

Figure 1-2. MRC, Rear Panel View

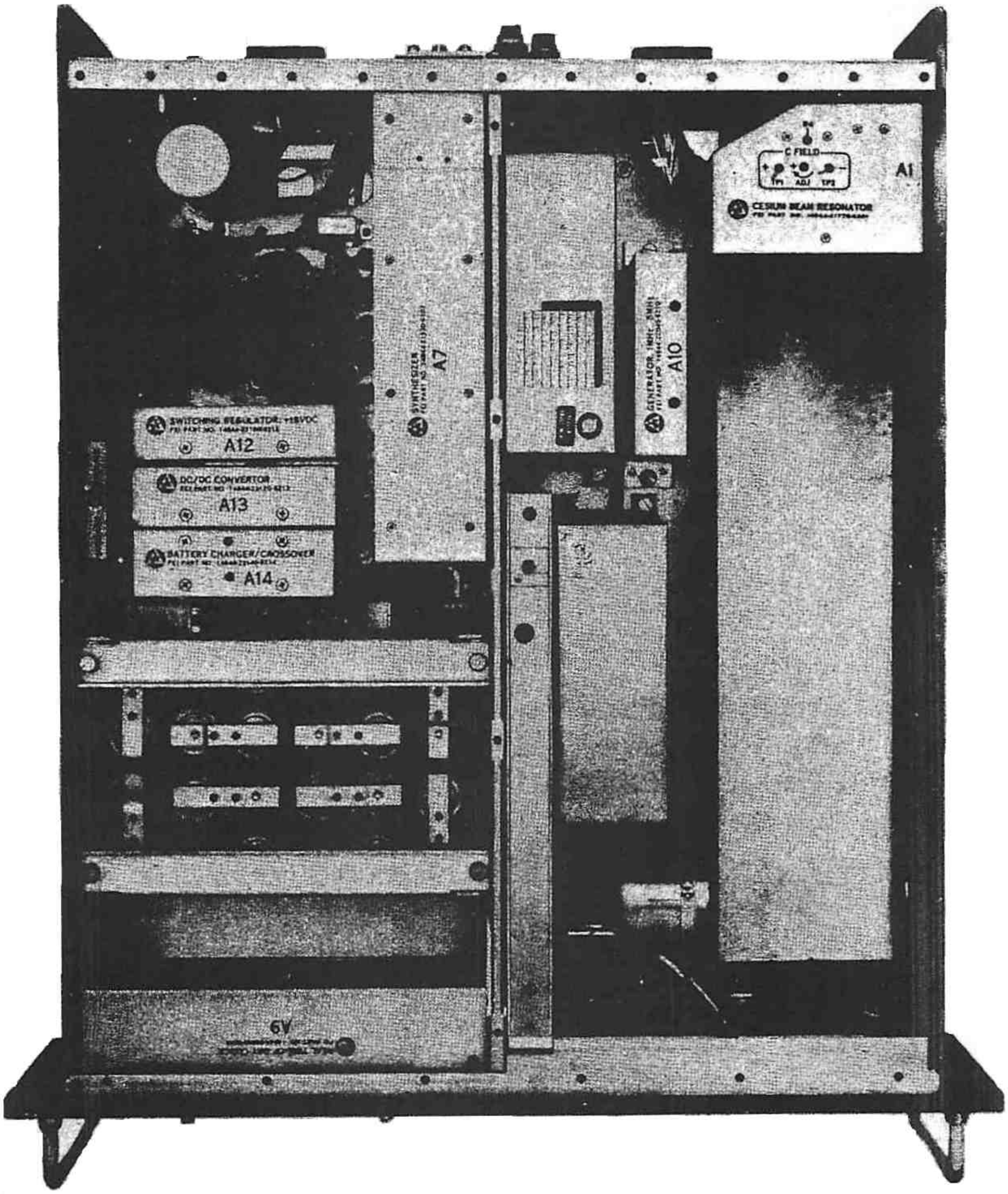

4458-PF-003A

Figure 1-3. MRC, Top View with Cover Plate Removed

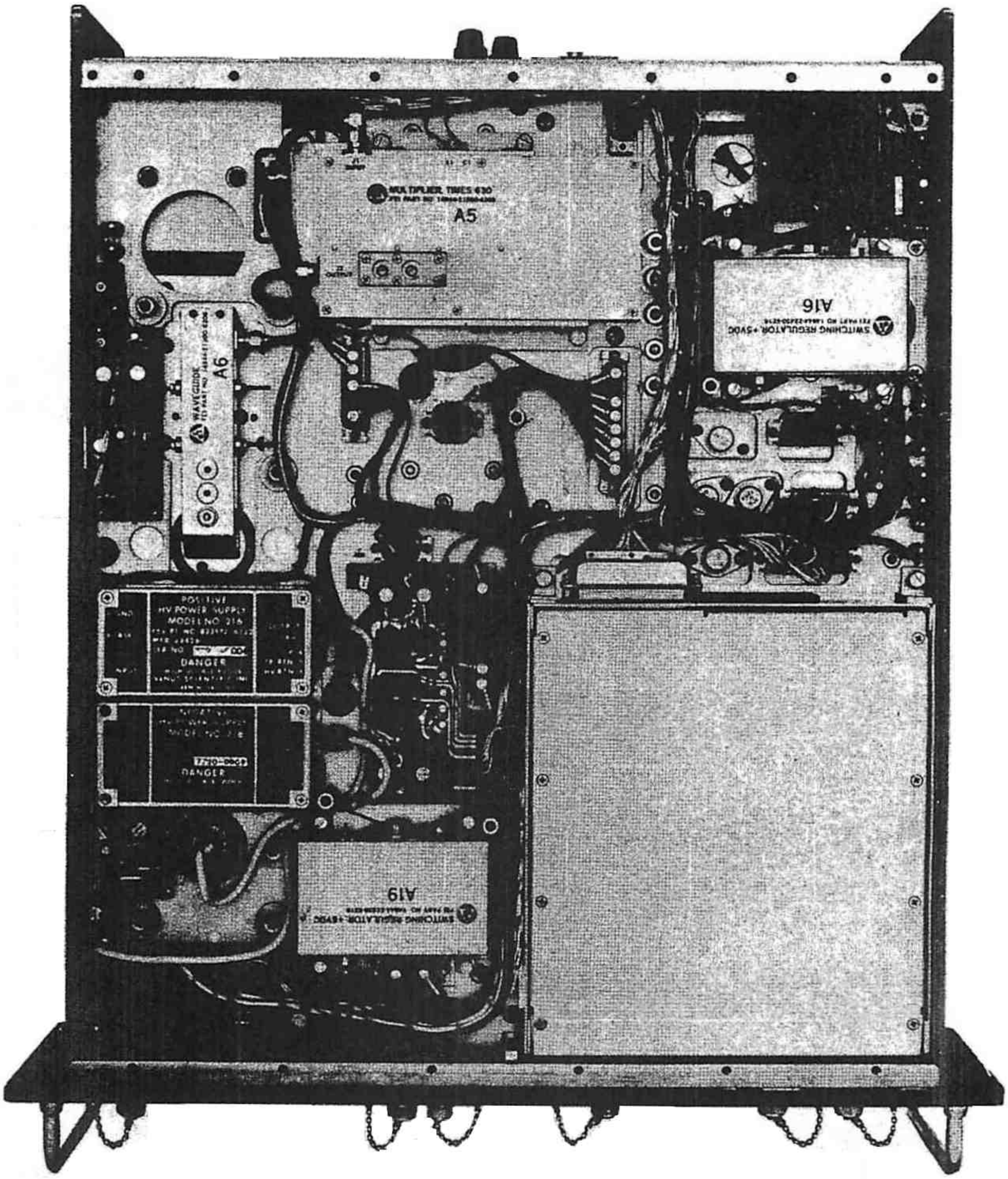

4458-PF-004A

Figure 1-4. MRC, Bottom View with Cover Plate Removed

1-4. CAPABILITIES AND LIMITATIONS. Capabilities and limitations for the MRC are compiled in table 1-2.

Table 1-2. Capabilities and Limitations

Parameter	Specification
Output Signals (Sinusoidal):	
Frequencies	5 MHz, 1 MHz
Amplitude	1 to 1.5 V rms into 50 ohms
Harmonic Distortion	-40 dB
Non-Harmonic Distortion	-80 dB (except -60 dB at extreme magnetic or vibratory fields)
Signal to Noise Ratio	-80 dB (in 30-kHz bandwidth, excluding bandwidth of ±1 Hz from f_o; except -60 dB at extreme magnetic or vibratory fields)
Accuracy	$\pm 3 \times 10^{-11}$
Reproducibility	$\pm 1 \times 10^{-11}$
Settability	Within $\pm 2 \times 10^{-12}$ of reference standard (6×10^{-11} total range)
Range	6×10^{-11}
Stability:	
Long Term	$\pm 1 \times 10^{-11}$ for life of Cesium beam tube
Short Term	Standard Deviation:
	$\sigma \leq 8 \times 10^{-9}$ for 100-microsecond sample intervals
	$\sigma \leq 7 \times 10^{-11}$ for 1-second sample interval
	$\sigma \leq \frac{7 \times 10^{-11}}{\sqrt{t}}$ / t for sample intervals > 1 second and < than 1 day
Stability vs Operating Temperature	-28°C to +65°C (-17.6°F to +149°F) $< 2 \times 10^{-11}$
Stability vs Humidity	50°C/95°C (122°F/203°F) humidity $< \pm 1 \times 10^{-11}$

Table 1-2. Capabilities and Limitations-Continued

Parameter	Specification
Stability vs Magnetic Field	$<\pm 2 \times 10^{-12}$/2 gauss dc
Time-of-Day Clock:	
Manual Clock Controls	UT SET, ADD, and SUB time
Time-of-Day Outputs	TIME DISPLAY in HOURS, MINUTES, and SECONDS
Second Mark	±6 V, 10 microseconds wide
Real-Time Data	±6 V serial output
Real-Time Data Transfer Clock	±6 V, 100 kHz, sync square wave
Real-Time Transfer Gate	±6 V, 200 microseconds wide
3 MHz	3 V into 50-ohm square wave
Clock and 1 PPM Coincidence	Seconds read (00) at 1 PPM
Time Scale Adjustment	Universal time (UT) + time adjust
1 PPS Pulse Width; 1 PPS Output	1 PPS at +10 V ±1 V into 50 ohms (20 microseconds +50% -20% into 50 ohms); rise time ≤50 nanoseconds (from 90% to 10% value); fall time ≤1.0 microsecond
1 PPM Pulse Width; 1 PPM Output	1 PPM at +4 V ±1 V dc ("1" state); 0 V ±0.5 V ("0" state) into 50 ohms; rise time ≤1.0 microsecond; fall time ≤ 0.9 microsecond, pulse width 10 ±1.0 microseconds
1 PPS/1 PPM Isolation	40 dB (10 lHz to 10 MHz)
1 PPS/1 PPM Jitter (Leading Edge)	10 microseconds (≤ 5 nanoseconds rms referenced to 5 MHz output, averaged over 10,000 pulses)
Time Scale:	
Time Scale	1 PPS and 1 PPM adjustable with thumbwheel switches over range of 1 second in discrete steps of 100, 10, and 1 milliseconds; and 100, 10, and 1 microseconds
Coincidence (1 PPS/1 PPM)	1 PPS lead edge, 1 PPM trail edge; and second mark trail edge coincident within 100 nanoseconds

Table 1-2. Capabilities and Limitations-Continued

Parameter	Specification
Synchronization (1 PPM/1 PPS)	Automatic with preset advance to leading edge of external sync pulse
Sync Error	$\leq \pm 1.0$ microsecond
Timing Pulse:	
Amplitude	1 PPS: +10 V into 50 ohms 1 PPM: +4 V into 50 ohms
Width	1 PPS: 20 microseconds 1 PPM: 10 microseconds
Rise Time	1 PPS: 50 nanoseconds
Fall Time	1 microsecond
Jitter	5 nanoseconds rms
Noise Immunity	200 V/1 microsecond/50 ohms
Temperature Stability	5 nanoseconds per °C
Pulse Advance	100 nanoseconds steps 1 second maximum
Auto Sync	±0.5 nanosecond
1 PPM Reset	100 nanoseconds maximum delay
Timing Fault Output	Normal: 3 to 5.5 V Fault: 0 to 0.5 V
Open Loop Oscillator Performance:	
Short Term Stability	$\leq \pm 1 \times 10^{-11}$/1 and 10 seconds
Orientation	$\leq 4 \times 10^{-9}$
Frequency Adjustment:	
Frequency Stability vs Power Supply	$\leq \pm 2 \times 10^{-10}$/ac operation $\leq \pm 4 \times 10^{-10}$/dc operation
Frequency Stability vs Temperature	$\leq \pm 5 \times 10^{-9}$
Frequency Stability vs Load	$\leq \pm 2 \times 10^{-11}$

Table 1-2. Capabilities and Limitations-Continued

Parameter	Specification
Signal to Noise Ratio	-87 dB -60 dB/vibratory and magnetic condition
Beam Tube Characteristics:	
Line Width	<1500 Hz
Signal to Background Ratio	>0.5
Signal to Noise Ratio	≥ 800
Figure of Merit	≥ 1
Life	3 years minimum
Controls and Indicators:	
Alarm Indicators	Primary and secondary loop
Continuous Operation Indicators	Primary and secondary loop
Oscillator Frequency Controls	Resolution $\geq 3 \times 10^{10}$
C-Field Control	$\geq \pm 2 \times 10^{-12}$ resolution
Environmental:	
Operating Temperature	Over -28°C to +65°C (-17.6°F to +149°F)
Non-Operating Temperature	-62°C to +75°C (-79.6°F to +167°F)
Humidity	95%
Temperature and Humidity	-28°C to +65°C (-17.6°F to +149°F)/95% humidity
Magnetic	$\pm 1 \times 10^{-11}$, 2 gauss field, and orientation
Vibration	MIL-STD-167
Shock, Vibration, and Inclination	2×10^{-11}

1-5. SPECIAL TOOLS AND TEST EQUIPMENT. There are no special tools required for maintaining the MRC. Test equipment required for maintaining the MRC is compiled in table 1-3. Table 1-4 lists test equipment that is required but not supplied.

Table 1-3. Test Equipment List

Nomenclature	Name	Use
Model 454 (80009) (or equivalent)	Oscilloscope	Observe waveform/pulse characteristics
		Timing pulse and dc outputs test for amplitude, pulse width, rise time/fall time, short circuit protection, timing fault operation
		Timing pulse and dc outputs test for pulse advance, synchronization, 1 PPM reset
		Manual clock control/time-of-day information tests for second mark, real-time data, real-time data transfer clock, real-time data transfer gate
		Manual clock control/time-of-day information test for 3 MHz output
		Clock indication/1 PPM test

Table 1-3. Test Equipment List-Continued

Nomenclature	Name	Use
		Supply line voltage and frequency test
Model 91CA (04901) (or equivalent)	RF voltmeter	Sinusoidal output test for amplitude
		Sinusoidal output test for short circuit protection
		Supply line voltage and frequency test
Model 651B (50435) (or equivalent)	Signal source	Sinusoidal output tests for isolation, harmonic distortion, and non-harmonic distortion
		Manual clock control/time-of-day information test for 3 MHz output
Model 209A (50435) (or equivalent)	Square wave generator	Timing pulse and dc outputs test for pulse advance, synchronization, 1 PPM reset
Model FE-40 ( ) (14844)	Phase comparator	Accuracy test
		Standby battery test
		Reproducibility test

Table 1-3. Test Equipment List-Continued

Nomenclature	Name	Use
		Supply line voltage and frequency test II
Model 3702 (14844)	Reference Cs beam tube standard	Accuracy test
		Standby battery test
		Reproducibility test
		Supply line voltage and frequency test
Model 141S/ 8552B/ 8553B (50434) (or equivalent)	Spectrum analyzer	Sinusoidal output tests for isolation, harmonic distortion, nonharmonic distortion
		Timing pulse and dc outputs test for isolation
		Manual clock control/time-of-day information test for 3 MHz output
		Beam tube characteristics test for beam tube signal to noise ratio
Model 5345A (or equivalent)	Frequency counter	Measure high frequencies

Table 1-3. Test Equipment List-Continued

Nomenclature	Name	Use
Model S109 (or equivalent)	Pulse generator	Clock indication/ 1 PPM test for automatic synchronization
Model 010-128 (or equivalent)	High impedance probe	Oscilloscope input impedance match
Model 432A (or equivalent)	Power meter	Measure multiplier power level
Model 260 (or equivalent)	Multimeter	Voltage and resistance measurements

Table 1-4. Test Equipment Required But Not Supplied

Part Number	Nomenclature	Use
636A630G01	Extender Cable	Extend module A3
636A631G01	Extender Cable	Extend module A7
636A632G01	Extender Cable	Extend module A7
636A633G01	Extender Cable	Extend module A10
636A634G01	Extender Cable	Extend modules A12, A13, and A17
636A635G01	Extender Cable	Extend module A14
636A636G01	Extender Cable	Extend modules A4, A8
636A637G01	Extender Cable	Extend module A9
636A638G01	Power Cable	Provide AC power
636A638G02	Power Cable	Provide AC and DC power
636A638G02	Power Cable	Provide DC power

1-6. RELATED TECHNICAL MANUALS. Technical manuals of interest to users of the MRC operation and maintenance manuals are compiled in table 1-5.

Table 1-5. Related Technical Manuals

Publication no.	Title
T.O. 31Z3-628-2	Radio Receiver Transmitter Set AN/FRC-117
T.O. 12R2-2ARC96-32	Airborne Communications System AN/ARC-96

CHAPTER 2

INSTALLATION

2-1. INTRODUCTION. This chapter consists of two sections covering installation requirements. Section I deals with installation logistics, while Section II presents installation procedures.

Section I. INSTALLATION LOGISTICS

WARNING

Because of this unit's weight, it has a two-person lift requirement.

2-2. SCOPE. This section provides unloading, unpacking, housing, and storage data for the equipment pertinent to installation.

2-3. UNLOADING AND UNPACKING. Before attempting to unload the MRC shipping container, examine exterior carefully to ensure that there are no obvious signs of damage. If damage is noted, request the shipping carrier's agent be present when the container is opened for inspection. At least two persons shall unload each shipping container. The package and contents should always be handled with the care normally accorded a delicate electronic instrument. No other special instructions are required for unloading or unpacking the equipment. After unpacking, perform a thorough visual inspection for any obvious damage that might have been caused in transit. Report damages to the carrier in accordance with standard operating procedure.

2-4. HOUSING. No special storage container is required to house the equipment before installation. However, the temperature in the storage area shall be limited to from -62°C to +75°C (-79.6°F to +167°F) for newly shipped units without internal batteries installed; -40°C to +65°C (-40°F to +149°F) for newly shipped units with internal batteries installed.

2-5. RECEIVING DATA. Receiving data are compiled in table 2-1.

Table 2-1. Receiving Data

Uncrated dimensions (MRC, less cables, nominal):	
Width	19 inches
Height	5-1/4 inches
Depth	22-3/4 inches
Uncrated weight	60 pounds
Crated dimensions (nominal):	
Width	23 inches
Height	24 inches
Depth	28 inches
Crated weight	100 pounds

2-6. MATERIAL HANDLING. Two persons are required to transport and handle the MRC. The crated MRC can be moved from place to place with the aid of a dolly or cart. One person shall pull the dolly or push the cart while the other steadies the crate. The uncrated MRC can be carried from place to place by two persons.

2-7. BUILDINGS AND OTHER SUPPORTING STRUCTURES. Data relative to buildings in which the MRC is installed are compiled in table 2-2.

Table 2-2. Installation Data

Maintenance floor space	Requires approximately 24 inches access space at front and rear of installed unit.
Floor loading	MRC weighs 60 pounds. No special loading problems should be encountered in either building or aircraft installations.
Heating, ventilating and miscellaneous criteria:	
Winter and summer design temperatures . . .	-28°C to +65°C (-17.6°F to +149°F) (independent of season)
Maximum allowable humidity . .	95% relative humidity
Minimum cubic feet of air for ventilating .	6
Magnetic field environment . .	MRC should be installed in area that is relatively free of strong magnetic fields. Tolerable ambient steady-state magnetic field intensity: 0 to 25 oersteds; tolerable sinusoidal variation of 0 to 25 oersted field: 1 Hz
Explosive atmosphere	MRC can operate in explosive atmosphere as defined by MIL-STD-810C, Method 511.1, Procedure I
Altitude	Accurate within design specifications for all altitudes up to 50,000 feet
Inclination	Meets requirements of MIL-E-16400

Table 2-2. Installation Data-Continued

Shock.	Meets requirements of MIL-E-5400
Vibration.	Meets requirements of MIL-STD-810
Crash safety	Meets requirements of MIL-E-5400 paragraph 3.4.24.6.2
Air conditioning and heat. . . . . . dissipation	Not applicable

Section II. INSTALLATION PROCEDURES

2-8. SCOPE. This section provides instructions for assembly, installation, and interconnection required at time of installation to ensure normal operational performance.

2-9. INSTALLATION SEQUENCE. Install the MRC in accordance with the following guidelines and procedures.

a. Site Selection. The MRC is a portable unit that may be set up on a bench or that may be permanently installed in a cabinet as part of Radio Receiver Transmitter Set AN/FRC-117; or aboard an aircraft as part of Airborne Communications System AN/ARC-96.

b. Installation. The MRC is installed in its designated cabinet assembly as determined by the facility cabinet configurations. The cabinet assembly recess contains two stationary slides on which two nylon buttons located on the bottom of the drawer are placed. The unit is installed in the cabinet using the following procedure.

(1) Set internal battery switch S1 at ON.

(2) Place drawer on cabinet slides and carefully push drawer part way into cabinet assembly recess.

(3) Carefully, continue to push drawer until connectors on rear of drawer are firmly seated with mating connectors of cabinet.

(4) Insert four screws in front panel and tighten with a screwdriver until drawer is firmly secured in cabinet.

c. Primary Power Connections. The MRC is operated from 115 V ac or 230 V ac (47 to 63 Hz or 360 to 460 Hz), or 22 to 30 V dc power. The MRC requires 185 watts of primary power at 115 V ac or 63 watts of primary power at 26 V dc for normal operation. Connect the MRC to power as follows:

NOTE

For 115 V ac operation, P1-4 and P1-5 are jumpered and P1-6 and P1-7 are jumpered. To operate the MRC from 230 V ac, the connector P1 jumpers used for 115 V ac should be removed and a new jumper should be installed between P1-5 and P1-6. Refer to tables 2-3, 2-4, and 2-5 for details of the following connections.

(1) Connect primary power to MRC through power cables to connector P1 on rear panel.

(2) Connect signal cables to connector P2 on rear panel and signal connections on front panel.

d. Internal Battery Operation. An internal battery provides power to operate the MRC for 1 hour at +25°C (77°F) at fully charged capacity; and 30 minutes at +55°C and -28°C (+131°F and -17.6°F).

NOTE

If both ac and external dc primary voltages are connected, the MRC will normally operate on the ac voltage and will use the optional dc sources for emergency standby power in the event of an ac power loss. Switchover to dc operation is automatic. During the absence of ac and dc power, the MRC will switch over to internal battery pack operation.

Table 2-3. Connector P1 Power Connections on MRC Rear Panel
DPGM-12-33S-B

Pin	Function
1	AC
2	Neutral
3	Safety ground
4,5	115 V external jumper
6,7 (5,6)	115 V external jumper (230 V external jumper)
8,9,10	Unused
11	+22 to +30 V dc
12	Return for pin 11

Table 2-4. Connector P2 Signal Connections on MRC Rear Panel

Pin	Function
1	3 MHz square wave
2	Unused
3	3 MHz square wave
4	Unused
5	Real-time data
6	Real-time data transfer clock
7	Real-time data transfer gate
8	Second mark
9	Minute mark (1 PPM)
10	Signal ground
11	Timing fault output
12	Return for pins 5 through 9
13	Real-time data
14	Real-time data transfer clock
15	Real-time data transfer gate
16	Second mark
17	Minute mark (1 PPM)
18	Return for pin 11 (chassis ground)
19	Unused
20	Return for pins 13 through 17

Table 2-5. Connectors on MRC Front Panel

Quantity	Function	Connector type (or equivalents)	Mating connectors
1 each	5 MHz output	UG-625B/U	CW-123A/U
1 each	1 MHz output	UG-625B/U	CW-123A/U
1 each	1 PPS output	Bendix Microwave 33062-1	CW-123A/U
1 each	Sync output	Bendix Microwave 33062-1	CW-123A/U
1 each	1 PPM output	Bendix Microwave 33062-1	CW-123A/U
1 each	Zeeman input	UG-625B/U	CW-123A/U

CHAPTER 3

PREPARATION FOR USE AND RESHIPMENT

3-1. INTRODUCTION. This chapter consists of two sections; Section I covers preparation for use, and Section II covers preparation for reshipment.

Section I. PREPARATION FOR USE

3-2. PREPARATION FOR USE. To prepare the MRC for use, proceed as follows:

NOTE

Before performing any checks, be sure to open the front panel hinged doors so that all controls, indicators, and connectors are available for observation and use.

a. Remove top cover and ensure STORAGE/OPERATE switch is set at OPERATE.

b. Set internal battery S1 ON/OFF switch at ON position (located at rear top side of battery pack). Reinstall top cover.

c. On rear panel, check that fuses F1 through F4 are present and in position. Apply AC power. (Spare fuses have been provided and located in fuseholders marked SPARE FUSES.) Set battery charge switch at AUTO.

NOTE

Allow 20 minutes warmup time for Cesium beam resonator signal level and crystal oscillator frequency to stabilize.

d. Check that the following indicators are lit.

(1) <u>POWER SOURCE/IN USE</u>

AC DC BAT	Only one lights.

(2) <u>POWER SOURCE/AVAILABLE</u>

DC BAT	If external dc is applied, and internal batteries are suitable for operation, these indicators light.

(3) PRIMARY LOOP and SECONDARY LOOP

OPERATE ALARM	Both OPERATE lamps light. If one of the alarms is lit, it is an indication that fault exists or existed. Push RESET switch. If ALARM lamp does not go out, further checking is required.

(4) BATTERY CHARGE

TRICKLE HIGH	One indicator lights, depending on battery charging state.

e. Assuming that all ac and dc input voltages are correctly applied, check for proper indications, using CIRCUIT CHECK meter and switch positions of table 3-1. Proceed through all 12 steps of switch and note that CIRCUIT CHECK meter indications fall within range of readings indicated.

f. With CIRCUIT CHECK switch set at position 4, 5, or 6, MRC must be warmed up for CIRCUIT CHECK meter to read within indicated range. At turn-on, or if MRC is not fully warmed up, meter may read above required ranges. Oven temperatures may be above or below normal readings depending on ambient temperature.

g. Set CIRCUIT CHECK switch at position 8 (Cesium ion current). Observe PRIMARY LOOP OPERATE and ALARM indicators. If PRIMARY LOOP OPERATE lamp is not lit, set PRIMARY LOOP MOD OFF/OPR switch at OFF position.

h. Momentarily actuate PRIMARY LOOP SLEW INCR/DECR switch toward INCR or DECR position until indication of ion current appears on meter. Meter indication will trace out dc resonance characteristics of Cesium beam tube (A1) frequency (Ramsey curve) as 14.59 + MHz oscillator frequency is varied by SLEW control. Characteristics of Ramsey curve are shown in figure 3-1.

i. Continue operating PRIMARY LOOP SLEW INCR/DECR switch until minima, maximum, and minima indications have been traced out on meter.

j. Actuate PRIMARY LOOP SLEW INCR/DECR switch in direction required to obtain maximum indication of trace centered on meter. If Ramsey curve trace is off meter, adjust DC OFFSET to bring it back within meter range.

NOTE

If Ramsey curve does not trace out on meter, reset CIRCUIT CHECK switch at position 9 (primary oscillator control voltage) and activate PRIMARY LOOP SLEW switch to INCR or DECR positions until meter nulls at zero. This sets 14.59 + MHz oscillator of primary loop to approximate frequency for achieving 9.19 + MHz transition frequency necessary to lock primary loop and achieve Ramsey curve. Then repeat steps g through i.

k. Release PRIMARY LOOP SLEW switch where main peak of Ramsey curve is achieved.

Table 3-1. Circuit Check Functions

Switch position	Function		CIRCUIT CHECK meter reading range
1	DC supply voltage		+40 to +80
2	Battery voltage		+40 to +80
3	Battery current	High charge	+40 to +80
		Trickle charge	0 to +20
		Discharge	-40 to -80
4	Cesium oven temperature		+40 to +80
5	Primary oscillator oven temperature		+40 to +80
6	Secondary oscillator oven temperature		+40 to +80
7	VAC-ion current		0 to +20
8	Cesium ion current		Set to 0 with OFFSET
9	Primary oscillator control voltage		0 $\pm$ 40
10	Secondary oscillator control voltage		0 $\pm$ 40
11	Secondary phase detector voltage		0 to +20
12	3 MHz signal level		+40 to +80

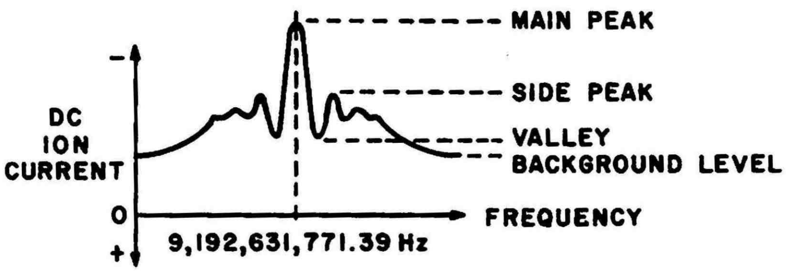

(CRYSTAL OSCILLATOR FREQUENCY X630)

Figure 3-1. Cesium Beam Tube DC Response Characteristic (Ramsey Curve)

l. Reset PRIMARY LOOP MOD OFF/OPR switch at OPR position, and primary loop will automatically be locked. This condition will be indicated by green PRIMARY LOOP OPERATE lamp. It is advisable to sweep through curve once so that main peak is selected and unit does not lock on side peak. Depressing RESET pushbutton will extinguish ALARM lamp.

m. Connect all MRC signal outputs via front panel coaxial connectors and rear panel connector P2.

n. Refer to paragraph 4-7 for instructions on setting 24-hour real time-of-day clock to internal time base and/or to external sync pulse.

Section II. PREPARATION FOR RESHIPMENT

3-3. SCOPE. The task of preparing the MRC for reshipment is described in the following steps.

a. Cleaning. Before packaging, clean MRC in accordance with the steps below.

WARNING

Wear goggles when using compressed air in procedure below. Warn other persons to keep away from the hazardous work area.

(1) Remove dust and loose dirt using vacuum or compressed air (pressure not to exceed 15 lbf/in^2 (pound-force per square inch)).

WARNING

Tetrachloroethylene is caustic and toxic. When using tetrachloroethylene, wear neoprene gloves to prevent prolonged contact with skin. Use only in a well-ventilated area.

(2) Remove stubborn dirt using a brush moistened with tetrachloroethylene.

WARNING

1,1,1-trichloroethane is caustic and toxic. When using 1,1,1-trichloroethane in procedure below, wear neoprene gloves to prevent prolonged contact with skin. Use only in a well-ventilated area.

(3) Remove corrosion from connector pins using a soft, clean cloth moistened with 1,1,1-trichloroethane.

(4) Clean external surfaces using a soft, clean cloth moistened with tetrachloroethylene.

WARNING

Wear goggles when using compressed air in procedure below. Warn other persons to keep away from the hazardous work area.

(5) Dry surfaces and connectors of unit using compressed air (pressure not to exceed 15 lbf/in^2).

b. Packaging MRC. Package the MRC in accordance with the steps below.

(1) Refer to table 3-2 and ensure that required packaging materials are present.

Table 3-2. Packing Materials, Standards, and Specification for MRC

Item	Standard/specification
Identification markings	MIL-STD-129
Plastic film	L-P-378
Cushioning material	MIL-P-26514, Type 1, Class 2
Fiberboard box	PPP-B-636, Style Fol-L, Type CF, Class-Weather Resistance
Sealing tape	PPP-T-97

(2) Inspect packing materials for cleanliness and good condition. Clean, repair, or replace as necessary.

(3) Remove MRC top cover. Set battery S1 ON/OFF switch to OFF. Replace top cover.

(4) Wrap MRC with plastic film. Heat seal plastic film.

(5) Wrap MRC in cushioning material. Secure cushioning material with sealing tape.

(6) Position wrapped MRC in fiberboard box.

(7) Close box and seal with sealing tape.

(8) Identify and label box in accordance with Military Standard MIL-STD-129.

CHAPTER 4

OPERATION

4-1. INTRODUCTION. This chapter consists of three sections covering operation. Section I presents controls and indicators information. Section II provides operating instructions, and Section III covers emergency operation.

Section I. CONTROLS AND INDICATORS

4-2. SCOPE. Operating controls and indicators for the MRC are located on the front panel of the instrument as shown in figure 4-1. Table 4-1 lists all operating controls and indicators by name and reference designation and describes the function of each listed item.

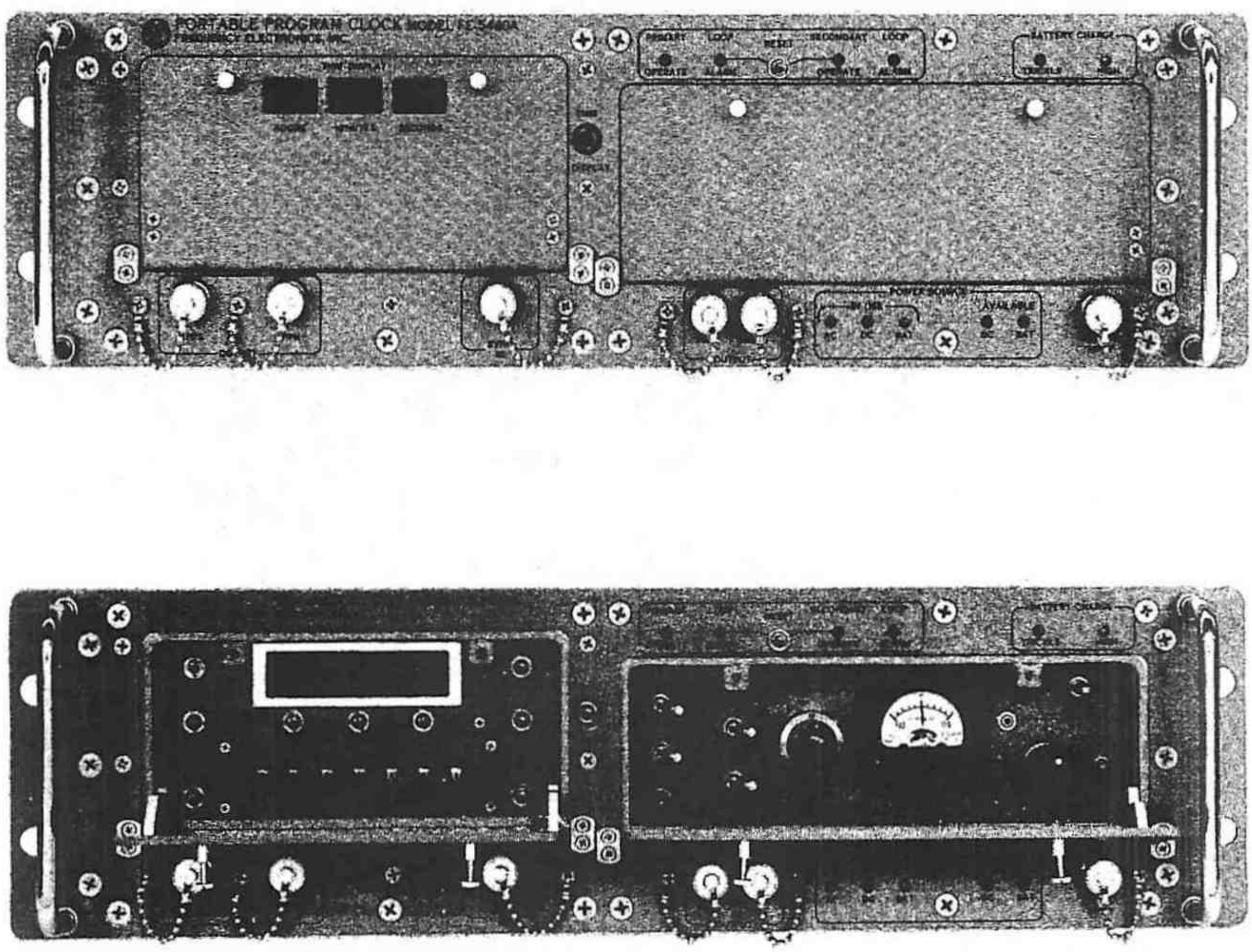

4458-PF-006A

Figure 4-1. MRC Front Panel Controls and Indicators

Table 4-1. MRC Controls and Indicators

Name	Ref des	Function
		Atomic frequency standard
PRIMARY LOOP OPERATE (indicator)	A0CR1	Advises whether primary loop is operating or inoperative.
PRIMARY LOOP ALARM (indicator)	A0CR2	Alerts that an alarm condition exists in primary loop.
RESET (switch)	A0S4	Resets alarm circuits after they have been activated and MRC has been returned to operation.
SECONDARY LOOP OPERATE (indicator)	A0CR3	Advises whether secondary loop is operating or inoperative.
SECONDARY LOOP ALARM (indicator)	A0CR4	Alerts that an alarm condition exists in secondary loop.
BATTERY CHARGE TRICKLE (indicator)	A0CR5	Indicates battery charge circuit is operating at trickle charge rate.
BATTERY CHARGE HIGH (indicator)	A0CR6	Indicates battery charge circuit is operating at high charge rate.
ZEEMAN INPUT (jack)	A0J10	Provides input for Zeeman frequency during calibration or test of Cesium beam tube.
POWER SOURCE AVAILABLE DC (indicator)	A0CR10	Indicates a dc power line is connected, is on, and is ready to power MRC.
POWER SOURCE AVAILABLE BAT (indicator)	A0CR11	Indicates battery power source is connected, charged, and ready to power MRC.
POWER SOURCE IN USE AC (indicator)	A0CR7	Indicates MRC is operating from ac power line.
POWER SOURCE IN USE DC (indicator)	A0CR8	Indicates MRC is operating from dc power line due to ac line failure or an ac unavailable condition.

Table 4-1. MRC Controls and Indicators-Continued

Name	Ref des	Function
POWER SOURCE IN USE BAT (indicator	A0CR9	Indicates MRC is operating from internal battery power due to ac and dc line failure or an unavailable condition.
1MHz OUTPUT (jack)	A0J9	Provides coaxial front panel connection for 1 MHz standard output signals.
5MHz OUTPUT (jack)	A0J8	Provides coaxial front panel connection for 5 MHz standard output signals.
PRIMARY LOOP MOD OFF/OPR (switch)	A3S1	Removes or applies 83.3 Hz modulation input to 14.59 + MHz primary oven-controlled, voltage-controlled crystal oscillator. Used for test or adjustment purposes only.
PRIMARY LOOP LOOP OPEN/OPR (switch)	A3S2	Opens or closes primary loop. Used for adjustment or maintenance purposes only.
PRIMARY LOOP SLEW INCR/DECR (switch)	A3S3	Used to adjust Ramsey curve by adjusting control signal to 14.59 + MHz oven-controlled, voltage-controlled crystal oscillator.
SECONDARY LOOP TIME CONST FAST/NORM (switch)	A0S3	In fast mode of the secondary loop, sets time constant at approximately 1 second; in the normal mode of secondary loop, sets time constant at approximately 70 seconds.
SECONDARY LOOP LOOP OPEN/OPR (switch)	A0S2	Opens or closes secondary loop. Used for adjustment or maintenance only.
SECONDARY LOOP OSCILLATOR ADJUST INCR ⟶ /LOCK ⟶ (control)	A8-	Adjusts 5 MHz oven-controlled, voltage-controlled crystal oscillator output frequency to correct for 5 MHz crystal aging.
CIRCUIT CHECK (meter)	A0M1	Monitors values selected by CIRCUIT CHECK switch (A0S8) for test purposes.

Table 4-1. MRC Controls and Indicators-Continued

Name	Ref des	Function
EXTR MTR (jack)	A0J11	Provides output jack for connection of external meter for test purposes. Connected via A0S8.
DC OFFSET (control)	A3R68	Provides off-scale reading capability when adjusting for Ramsey curve.
BAT CHG AUTO/TRKL/HIGH (switch)	A0S6	Places battery charge circuits into constant current or constant voltage trickle/fast charge modes.
CIRCUIT CHECK 1...12 (switch)	A0S8	Selects circuits for test purposes; pertinent values displayed by meter A0M1.
	Real time-of-day clock	
CLOCK OPER/ TIME HOLD (switch)	A9S2	Provides capability for clock operation and holding of time for setting of clock.
1 PPM RESET (switch)	A9S3	Resets 1 PPM to external sync pulse and returns seconds to 00.
SYNC ARM (switch and indicator)	A9S4, A9CR2	When SYNC ARM pushbutton switch is depressed, SYNC ARM indicator lights; when external sync pulse syncs, clock indicator goes out.
TIME DISPLAY HOURS/MINUTES/ SECONDS (indicators)	A9U1 thru A9U6	Provide tens and units time-of-day LED readout in hours, minutes, and seconds.
HOURS/MINUTES/ SECONDS (switches)	A9S5 thru A9S7	Three pushbutton controls located below hours, minutes, seconds LED display which allows display to be reset in conjunction with ADD, SUB, and TIME HOLD switches.
ADD (switch)	A9S9	Adds to time-of-day display, when used in conjunction with HOURS, MINUTES, and SECONDS switches A9S5 thru A9S7.

Table 4-1. MRC Controls and Indicators-Continued

Name	Ref des	Function
SUB (switch)	A9S10	Subtracts from time-of-day display, when used in conjunction with HOURS, MINUTES, and SECONDS switches A9S5 thru A9S7.
PULSE ADVANCE MICROSEC (thumbwheel switch)	A9S1	Provides capability of advancing or delaying the second mark, and 1 PPS and 1 PPM outputs over a range of 1 second in discrete steps of 100, 10, and 1 millisecond, and 100, 10, and 1 microsecond.
UT SET (switch and indicator)	A9S11, A9CR1	Switch subtracts 1 second from time-of-day seconds display and real-time seconds output to universal time. Indicator lights when switch is operated.
TIME DISPLAY (switch)	A9S8	Illuminates clock LED numerical readout on command when MRC is in battery operation.
SYNC IN (jack)	A9J4	Provides connection for external source of sync signals for synchronization of time-of-day clock.
1PPM OUTPUT (jack)	A9J3	Provides front panel coaxial connection for time-of-day real data 1 PPM information.
1PPS OUTPUT (jack)	A9J2	Provides front panel coaxial connection for time-of-day real data 1 PPS information.

Section II. OPERATING INSTRUCTIONS

4-3. GENERAL. Pre-operation procedures for the MRC are the same as the preparation for use included under paragraph 3-2.

4-4. START-UP. To start the MRC, refer to paragraph 3-2.

4-5. MODES OF OPERATION. The MRC is operated as an atomic frequency standard and as a real time-of-day clock.

4-6. ATOMIC FREQUENCY STANDARD OPERATING PROCEDURE. As an atomic frequency standard, the MRC provides outputs of 5 MHz, 1 MHz, and 3 MHz. The 5 MHz and 1 MHz signals are sinusoidal outputs available via BNC type connectors on the front panel. The 3 MHz signals are square wave outputs and are available through connector P2 on the rear panel.

A guide to the operation of the MRC as an atomic frequency standard is presented in table 4-2.

4-7. REAL TIME-OF-DAY CLOCK OPERATING PROCEDURE. As a real time-of-day clock, the MRC provides the user with a front panel digital readout LED display of real time in hours, minutes, and seconds. In addition, the clock function provides outputs of 1 PPS and 1 PPM at the front panel; real-time data, and a 3 MHz square wave at output connector P2 on the rear panel.

a. Operating Clock. To operate the real time-of-day clock, set the CLOCK OPER/TIME HOLD switch at CLOCK OPER. The real time-of-day display will run and show the time in hours, minutes, and seconds on the front panel numeric LED display and readout.

NOTE

Under internal battery operation, push TIME DISPLAY switch to light LED numerical clock display.

b. Setting Time-of-Day Clock. To set the clock, proceed as follows:

(1) Set CLOCK OPER/TIME HOLD switch at TIME HOLD.

(2) Check reference time and push ADD or SUB switch to add or subtract, while simultaneously depressing HOURS, MINUTES, and/or SECONDS pushbutton, to reference time setting seconds to 2 seconds later than true reference time.

(3) When true reference time reaches MRC time, set the CLOCK OPER/TIME HOLD switch at CLOCK OPER.

c. 1 PPM Reset. To reset the 1 PPM pulse to 100 nanoseconds or less delay from time coincidence with any selected 1 PPS output over a 1 minute period, activate the 1 PPM RESET switch and note that:

(1) The SECONDS count goes to 00.

(2) The MINUTES count advances to the next minute.

d. UT (Universal Time) SET Switch. The UT SET switch allows for correction of the seconds timing to WWV/WWVH corrections issued periodically for variances in standard time. Each actuation of the UT SET switch will subtract 1 second from the real time. (Delay the seconds count by 1 second.)

e. External Synchronization. To synchronize the clock 1 PPS, 1 PPM, and second mark to the leading edge of an external sync pulse automatically with a preset advance, proceed as follows:

(1) Apply synchronizing pulse to SYNC IN connector on front panel.

Table 4-2. Operation of the MRC as an Atomic Frequency Standard

Function	Nomenclature	Comments
Outputs:	5 MHz, 1 MHz, 3 MHz	Connect as required.
Indicators:		
POWER SOURCE	IN USE, AC/DC/BAT	Indicators light as connected, and upon setting of applicable switches.
AVAILABLE	DC/BAT	
BATTERY CHARGE	TRICKLE/HIGH	
Indicator lamps:		
PRIMARY LOOP	OPERATE and/or ALARM	Indicator lamps light, depending on operational status of MRC.
SECONDARY LOOP	OPERATE and/or ALARM	
Switches:		
PRIMARY LOOP:		
MOD	OPR	Set switches, as required, for system operational requirement.
LOOP	OPR	
SLEW	Center position	
SECONDARY LOOP:		
LOOP	OPR	Set switches, as required, for system operational requirement.
TIME CONST	NORMAL	
BATTERY CHARGE	AUTO/TRKL/HIGH	

(2) Depress SYNC ARM pushbutton and observe that SYNC ARM indicator lights.

(3) When clock synchronizes to external sync pulse, SYNC ARM light is extinguished.

f. PULSE ADVANCE MICROSEC Thumbwheel Switch Operation. The timing of the pulses is adjusted via the PULSE ADVANCE MICROSEC thumbwheel switches on the front panel in seven discrete steps of 100, 10, and 1 milliseconds; and 100, 10, 1, and 0.1 microseconds, over a range of 1 second. The switches advance the time of the output pulses.

4-8. STOPPING THE MRC. The MRC is turned off by removing both the ac and dc power inputs applied through connector P2, and setting internal battery switch S1 at OFF.

Section III. EMERGENCY OPERATION

4-9. NO-BREAK OPERATION. The MRC is capable of being connected to both an external ac and a dc source of power, and contains an integral backup battery. This setup is the basis of a no-break in-service operational capability designed into the MRC. With all three power sources connected and power available from all three sources, the MRC is powered from the ac supply. If ac suddenly becomes unavailable, an automatic no-break switchover to the external dc power source occurs. Further, if the external dc supply is suddenly interrupted, an automatic no-break switchover takes place and the internal battery becomes the source of power for the MRC. At this time, to conserve power, the LED display for the real time-of-day clock is extinguished and can only be illuminated on command by pressing the TIME DISPLAY switch on the MRC front panel.

RADC-TR-84-102
Final Technical Report
May 1984

PORTABLE REAL-TIME CLOCK

Frequency Electronics, Inc.

Marvin Meirs

APPROVED FOR PUBLIC RELEASE; DISTRIBUTION UNLIMITED

ROME AIR DEVELOPMENT CENTER
Air Force Systems Command
Griffiss Air Force Base, NY 13441

This report has been reviewed by the RADC Public Affairs Office (PA) and is releasable to the National Technical Information Service (NTIS). At NTIS it will be releasable to the general public, including foreign nations.

RADC-TR-84-102 has been reviewed and is approved for publication.

APPROVED:

NICHOLAS F. YANNONI
Project Engineer

APPROVED:

HAROLD ROTH, Director
Solid State Sciences Division

FOR THE COMMANDER:

JOHN A. RITZ
Acting Chief, Plans Office

If your address has changed or if you wish to be removed from the RADC mailing list, or if the addressee is no longer employed by your organization, please notify RADC (ESES), Hanscom AFB MA 01731. This will assist us in maintaining a current mailing list.

Do not return copies of this report unless contractual obligations or notices on a specific document requires that it be returned.

UNCLASSIFIED
SECURITY CLASSIFICATION OF THIS PAGE

REPORT DOCUMENTATION PAGE

1a. REPORT SECURITY CLASSIFICATION: UNCLASSIFIED

1b. RESTRICTIVE MARKINGS:

2a. SECURITY CLASSIFICATION AUTHORITY: N/A

2b. DECLASSIFICATION/DOWNGRADING SCHEDULE: N/A

3. DISTRIBUTION/AVAILABILITY OF REPORT: Approved for public release; distribution unlimited.

4. PERFORMING ORGANIZATION REPORT NUMBER(S): N/A

5. MONITORING ORGANIZATION REPORT NUMBER(S): RADC-TR-84-102

6a. NAME OF PERFORMING ORGANIZATION: Frequency Electronics, Inc.

6b. OFFICE SYMBOL (If applicable):

7a. NAME OF MONITORING ORGANIZATION: Rome Air Development Center (ESES)

6c. ADDRESS (City, State and ZIP Code): 55 Charles Lindbergh Blvd, Mitchell Field NY 11553

7b. ADDRESS (City, State and ZIP Code): Hanscom AFB MA 01731

8a. NAME OF FUNDING/SPONSORING ORGANIZATION: Rome Air Development Center

8b. OFFICE SYMBOL (If applicable): ESES

9. PROCUREMENT INSTRUMENT IDENTIFICATION NUMBER: F19628-78-C-0094

8c. ADDRESS (City, State and ZIP Code): Hanscom AFB MA 01731

10. SOURCE OF FUNDING NOS.

PROGRAM ELEMENT NO.	PROJECT NO.	TASK NO.	WORK UNIT NO.
63733F	616A	00	02

11. TITLE (Include Security Classification): PORTABLE REAL-TIME CLOCK

12. PERSONAL AUTHOR(S): Marvin Meirs

13a. TYPE OF REPORT: Final

13b. TIME COVERED: FROM Jun 78 TO Jan 81

14. DATE OF REPORT (Yr., Mo., Day): May 1984

15. PAGE COUNT: 44

16. SUPPLEMENTARY NOTATION: N/A

17. COSATI CODES

FIELD	GROUP	SUB. GR.
09	03	
23	06	

18. SUBJECT TERMS (Continue on reverse if necessary and identify by block number):
Portable Real-Time Clock
Cesium Beam Tube Resonator
Voltage Controlled, Oven Controlled Crystal Oscillator

19. ABSTRACT (Continue on reverse if necessary and identify by block number)

Report defines program objectives and technical problems. Report describes technical approach and specifies the final results and conclusions.

20. DISTRIBUTION/AVAILABILITY OF ABSTRACT: UNCLASSIFIED/UNLIMITED ☒ SAME AS RPT. ☐ DTIC USERS ☐

21. ABSTRACT SECURITY CLASSIFICATION: UNCLASSIFIED

22a. NAME OF RESPONSIBLE INDIVIDUAL: Nicholas F. Yannoni

22b. TELEPHONE NUMBER (Include Area Code): (617) 861-2206

22c. OFFICE SYMBOL: RADC (ESES)

DD FORM 1473, 83 APR — EDITION OF 1 JAN 73 IS OBSOLETE.

UNCLASSIFIED
SECURITY CLASSIFICATION OF THIS PAGE

Item # 17 Continued

Field	Group
09	01

Item # 18 Continued

(XCOCXO)
Time-Delay Signal Output, Synthesizer

TABLE OF CONTENTS

TABLE OF CONTENTS (CONTINUED)

ILLUSTRATIONS

SECTION I

PROGRAM DESCRIPTION

1.1 Background

In June of 1978, Frequency Electronics was awarded a contract to perform the necessary research and development to advance the state of the art in Cesium beam tube technology and applications to a point that would make it feasible to design and fabricate a portable Cesium Beam Frequency Standard having performance characteristics equivalent to that of the existing non-portable units.

The current production model of the Cesium Beam Standard is Model FE-5440A which is presently used in the 616A program and other airborne, shipboard, and ground support systems. The frequency and time signals produced by the Cesium Standard are extremely accurate with tolerances for accuracy and stability being on the order of several parts per 10^{-11}

1.2 Program Objectives

A summary of the objectives set forth for the design of the Portable Real Time Clock is given below. These objectives cover only broad functional areas of the design and development program.

1) Develop a light weight Cesium Beam Tube that would make it feasible to design a Portable Real Time Clock having the specified capabilities and accuracies.

2) Investigate and complete the redesign of the electronic control loops associated with the Cesium Beam Tube. This was a necessary goal if the required weight reduction of the unit were to be realized and the final unit be a truly portable unit.

3) Design, fabricate and evaluate the various electronic assemblies and the Cesium Beam Tube and Resonator.

4) Design, develop, fabricate and test two (2) Portable Real-Time Clock (PRTC) feasibility models based on Cesium Beam Tube technology which will provide clock-drive and time-of-day signal outputs.

5) The Time Scale of the feasibility models shall be on Universal Coordinated Time. They shall be capable of accepting information from external sources, and will be capable of synchronization upon operator command. The PRTC shall be capable of being powered by ac, dc, external or internal power source.

1.3 Summary

Frequency Electronics has successfully completed the program with the design, fabrication, and testing of two portable units. The new portable unit is known as the Portable Real Time Clock (PRTC) and its electrical characteristics have been proven to be equal to or better than those of the existing non-portable standards.

The PRTC measures 5-7/32 inches high by 13-1/4 inches wide by 19-1/4 inches deep and weighs 39 pounds. The total weight of the PRTC including the internal battery exceed the design goal of 30 pounds by 9 pounds. The unit occupies approximately 1330 cubic inches of space which is a 40 percent reduction in space requirements when compared to a typical non-portable cesium standard.

SECTION II

TECHNICAL DESCRIPTION

2.1 PRTC Functional Description

A functional block diagram of the Portable Real Time Clock is shown in Figure 1. The block illustrates the new single loop system concept implemented in the PRTC. A functional description of the PRTC us | the block diagram shown in Figure 3 is given in paragraphs that follow.

The Cesium Beam Resonator, A1, provides the primary frequency reference. The Cesium Beam Resonator is an atom-microwave device that as a resonant frequency of the (4,0) --> (3,0) hyperfine energy-level transition of Cesium 133 in a weak magnetic field (C-field).

The resonant frequency of the resonator is 9,192,631,771.59 Hz (9.192^+ GHz) and with the single exception of magnetic fields, the transition frequency is completely independent of all environmental conditions. The resonator receives excitation energy of 9.192^+ GHz from modulator and multiplier assembly A5. The resonator assembly acts as a detector to

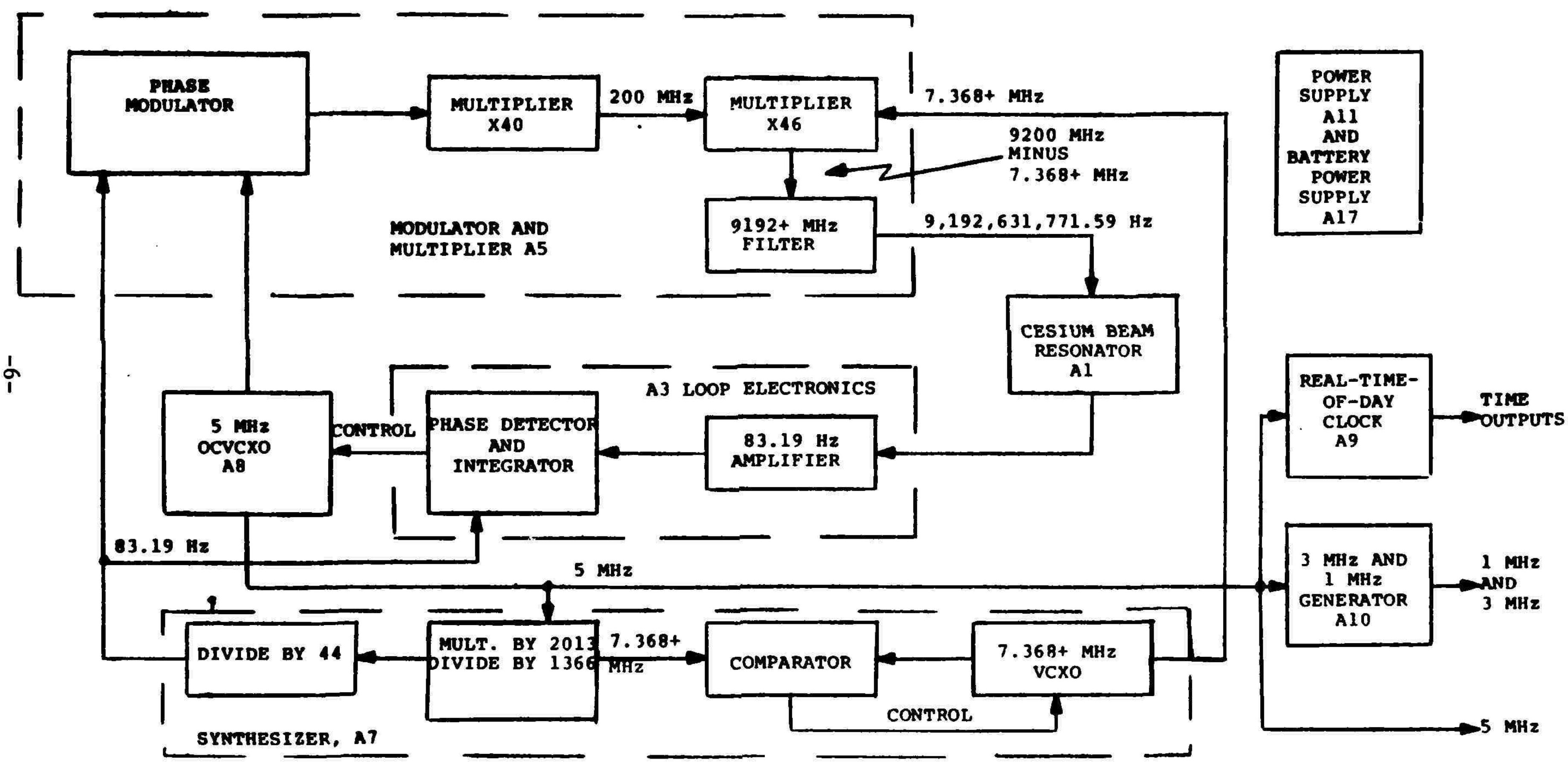

FIGURE 1. PRTC BLOCK DIAGRAM

detect the 83 Hz that is used by the A3 electronics to synchronize the 5 MHz oven controlled, voltage controlled, crystal oscillator (OCVCXO), assembly A8. Four assemblies, A1, A3, A8 and A5, form a phase locked loop that maintains the accuracy of the output of the 5 MHz oscillator.

2.1.1 A1 Cesium Beam Resonator

Significant parameters of the new light weight resonator that was developed for the PRTC program are:

A. Line width < 800 Hz

B. Signal to noise > 58 dB/Hz

C. Signal to background > 6

D. Short-Term stability $< 3 \times 10^{-11}$

2.1.1.1 Improved Cesium Beam Tube Technology

The largest single item contributing the most size and weight to Cesium Beam standard is the Cesium Beam Resonator. This item weighs 20 pounds in non-portable standard models. It was decided at the outset of the PRTC program that a major redesign of this item could yield a weight saving of almost 50 percent. Also, a careful redesign of the resonator housing could result in a 50% reduction in the volume of the unit.

The Cesium Beam resonator "A" and "B" magnets were redesigned to reduce their weight from 3.5 pounds to 1.0 pound. This weight reduction was accomplished without any degradation in the magnetic field supplied by these magnets. A magnetic field in excess of 9,000 gauss was obtained.

The Cesium Beam Resonator A1 assembly was redesigned to reduce its size by 40 percent. This was done without sacrificing performance or changing the basic design. To attain this reduction, the height and width were shortenend while the 16.5-inch length was maintained. In addition, the VAC-ION pump was placed on the outside of the Cesium Beam Tube.

The new Cesium Beam Resonator, developed for the PRTC, weighs 11 pounds and occupies a space of 129 cubic inches. Thus, the redesign effort resulted in a new smaller Cesium Beam Resonator for the portable unit that has all the performance characteristics of its larger non-portable unit counterpart but is 40 percent smaller in volume and 45 percent lighter.

2.1.2 A3 Loop Electronics

The A3 loop electronics provide the phase detection and integration that is required in the phase lock loop to process the detected 83 Hz error signal and develop the d-c control signal that is used to correct the 5 MHz oscillator. The A3 loop electronics provide a 83 Hz gain of 2000 and a 3 dB bandwidth of 10 Hz.

2.1.3 A5 Modulator and Multiplier

The A5 assembly receives the 5 MHz output of the 5 MHz OCVCXO and the 83 Hz output of the A7 Synthesizer. The input 5 MHz signal is phase modulated at an 83 Hz rate. This signal is then multiplied by 40 to 200 MHz in a transistor multiplier. The 200 MHz signal drives a step recovery diode which multiplies it by a factor of 46 to 9.2 GHz. This signal is then mixed with the 7.368^{+} MHz signal from the A7 synthesizer to obtain the 9.192^{+} GHz signal for the Cesium Beam Tube.

2.1.4 A7 Synthesizer

The synthesizer receives the 5 MHz signal from the 5 MHz oscillator, A8, and uses it to synthesize the 7.368^+ MHz reference signal that is supplied to the A5 module. This is accomplished by using a 7.368^+ MHz voltage controlled crystal oscillator (VCXO) in a phase locked loop configuration. The 5 MHz crystal oscillator output is multiplied by a factor of 2013/1366 to obtain the 7.368^+ MHz reference signal required to control the output of the 7.368^+ MHz VCXO. The output of the VCXO and the synthesized 7.368^+ reference signal are compared by a phase comparator which, in turn, issues the necessary error-correcting frequency control signal to the VCXO. The range of control of the 7.368^+ MHz VCXO is 250 Hz and its output is +6 dBm. The synthesizer also divides the 5 MHz signal by a factor 60,104 to develop the 83 Hz signal that is used by the A5 module to phase-modulate the 5 MHz crystal oscillator signal.

2.1.5 A9 Real Time Clock

The real time clock module uses the output of the 5 MHz crystal oscilaltor to develop real time data and associated mark, timing and data transfer signals.

2.1.6 A10 Generator

The A10 generator module uses the output of the 5 MHz crystal oscillator to develop the 1 MHz sinusoidal output and the 3 MHz squarewave output.

2.1.7 A11 Power Supply

The A11 power supply module uses state of the art power supplies equipped with phase modulated switching regulators. The supply has been designed for minimum ripple and switching spikes. The switching frequency is 27 kHz with a ripple amplitude of less than 20 millivolts. The amplitudes of the high frequency spikes are less than 40 millivolts. The efficiency of a switching regulator is 65 percent. The overall efficiency of the A11 power supply, including linear regulators, is 53 percent.

2.2 Technical Specifications

Electrical and Environmental Specifications of the PRTC are presented in Table 1, PRTC Technical Specifications and in Figure 2, Short-Term Stability and Figure 3, Phase Noise Spectrum.

TABLE 1

PORTABLE REAL TIME CLOCK

TECHNICAL SPECIFICATIONS

ELECTRICAL

ACCURACY:	$\pm 1 \times 10^{-11}$ @ room temperature $\pm 3 \times 10^{-11}$, maintained over a temperature range of −40°C to +65° C and magnetic fields up to 0.2 millitesla (2 gauss) peak.
REPRODUCIBILITY:	$\pm 1 \times 10^{-11}$
SETTABILITY (Frequency:)	$\pm 3 \times 10^{-13}$ Potentiometer adjustable "C" Field.
LONG-TERM STABILITY:	$\pm 1 \times 10^{-11}$
SHORT-TERM STABILITY (5 MHz):	See Figure 1
AVERAGING TIME (SEC.):	$\Delta f/f$
.0001	8×10^{-9}
.001	1×10^{-9}
.01	2×10^{-10}
.1	3×10^{-11}
1	5×10^{-12}
10	1×10^{-11}
100	3×10^{-12}
1,000	1×10^{-12}
10,000	3×10^{-13}
SSB PHASE NOISE (5 MHz):	See Figure 2
OFFSET FROM SIGNAL:	Phase Noise (1 Hz BW)
Hz	dB
10^1	120
10^2	130
10^3	150
10^4	155
10^5	155
WARM-UP TIME:	20 minutes from −28° C
SINUSOIDAL OUTPUTS:	5 MHz, 1 MHz, via front panel outputs.
OUTPUT VOLTAGE:	0.9 to 1.5 Vrms into 50 ohms.
HARMONIC DISTORTION:	Down more than 40 dB from rated output.
NON-HARMONICALLY RELATED OUTPUT:	Down more than 80 dB from rated output.
LOOP TIME CONSTANT:	1 second and 20 seconds.
SQUARE WAVE OUTPUT 3 MHz:	2.5 VP-P minimum into 75 ohms, rear panel only.

TABLE 1

PORTABLE REAL TIME CLOCK

TECHNICAL SPECIFICATIONS (CONT'D)

ENVIRONMENTAL

TEMPERATURE,	
Operating:	−40°C to +65°C. Frequency change $<2\times10^{-11}$ with respect to frequency at 25° C.
Non-Operating:	−62° C to +75° C. The ion pump must be operated continuously for extended storage above 35° C, or periodically at lower storage temperatures.
HUMIDITY:	Operating range: 95% humidity, from −28° C to +65° C. Frequency change $<1\times10^{-11}$ from −28° C to +50° C with respect to frequency at 25° C, 50% humidity.
ALTITUDE:	Frequency change 0 to 15.2 km (50,000 ft.), $<2\times10^{-12}$.
MAGNETIC FIELD:	0 to 0.2 millitesla (0 to 2 gauss) dc or peak ac at 50, 60 and 400 Hz; frequency change less than $\pm 2\times10^{-12}$. No permanent damage while operating in magnetizing field of 2000 ampere-turns/meter (25 oersteds) dc to 1 Hz.
VIBRATION:	MIL-E-16400 MIL-E-5400 frequency shift $<2\times10^{-11}$.
SHOCK:	MIL-E-5400
CRASH SAFETY:	MIL-E-5400
EMC:	MIL-STD-461 and MIL-STD-462
VOLTAGE REQUIRED:	22 to 30 Vdc.
POWER CONSUMPTION:	
During Warm-up:	75 watts max.
After Warm-up:	48 watts max.
STANDBY BATTERY:	
Battery Capacity:	1 hour @ 25° C ½ hour @ −28° C and +65° C
Charging Rate:	16 hours
Battery Switch-over:	Automatic

TABLE 1

PORTABLE REAL TIME CLOCK

TECHNICAL SPECIFICATIONS (CONT'D)

TIME-OF-DAY CLOCK

Manual Clock Controls:	Set and Add/Subtract
TIME-OF-DAY OUTPUTS:	
Second Mark:	± 6V, 10 microseconds wide. Rear panel (2 each) individually buffered.
Real-Time Data:	± 6V, 20-bit serial output (hours, minutes, seconds BCD). Rear panel (2 each) individually buffered.
REAL-TIME DATA TRANSFER CLOCK:	± 6V, 100kHz, synchronized square wave. Rear panel (2 each) individually buffered.
REAL-TIME TRANSFER GATE:	± 6V, 200 microseconds wide. Rear panel (2 each) individually buffered.
TIME SCALE ADJUSTMENT:	UT + Time Adjust.
1 PPS:	+ 10V ± 1V into 50 ohms (20 microseconds wide; rise time 50 nanoseconds) front panel only.
1 PPM:	+ 4V ± 1Vdc into 50 ohms (10 microseconds wide). 2 rear panel outputs, individually buffered.
1 PPS/1 PPM Isolation:	40 dB (10 kHz to 10 MHz).
1 PPS/1 PPM Jitter (Leading Edge):	5 nanoseconds rms referenced to 5 MHz output.
TIME SCALE:	1 PPS and 1 PPM adjustable with thumbwheel switches over a range of 1 second in discrete steps of 100, 10, and 1 millisecond; and 100, 10, 1 and 0.1 microsecond.
COINCIDENCE (1 PPS/1 PPM):	1 PPS leadedge, 1 PPM trailedge; and second mark trailedge coincident within 100 nanoseconds.
SYNCHRONIZATION (1 PPM/1 PPS):	Automatic with Preset Advance to the leading edge of an external sync pulse.
SYNC ERROR:	± 1.0 microseconds.
TIMING FAULT OUTPUT:	Normal: 3 to 5.5V. Fault: 0 to 0.5V.

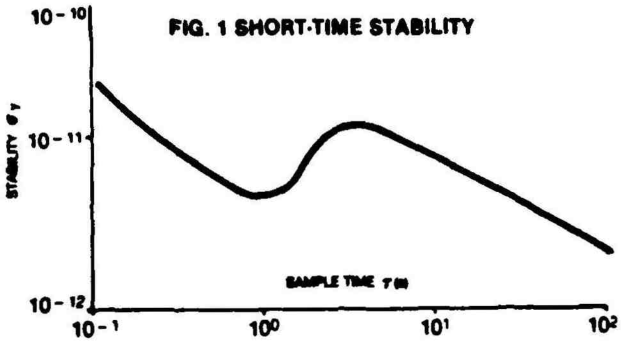

FIGURE 2. SHORT-TERM STABILITY

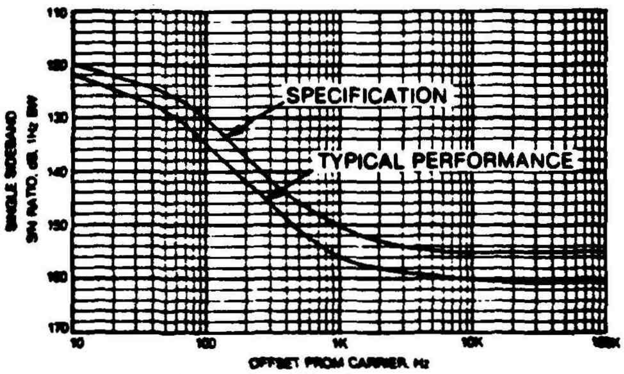

FIG. 2 PHASE NOISE SPECTRUM

FIGURE 3. PHASE NOISE SPECTRUM

2.3 Mechanical Design

The mechanical specifications for the Portable Real Time Clock are as follows:

A. Size - 5-7/32" high, 13-1/4" wide, 19-1/4" deep.

B. Weight - 39 pounds, including 1-hour battery pack.

C. Tube Life - Cesium Beam Tube life is 3 years minimum.

Figure 4 shows the mechanical layout of the major assemblies in the PRTC. The following lists the major assemblies of the PRTC:

	MODULE
A1	CESIUM BEAM TUBE
A3	ERROR SIGNAL CONTROLLER
A5	MULTIPLIER
A7	SYNTHESIZER
A8	5 MHZ OCVCXO
A9	CLOCK
A10	1 MHZ/3 MHZ DIVIDER
A11	POWER SUPPLY
A17	BATTERY PACK

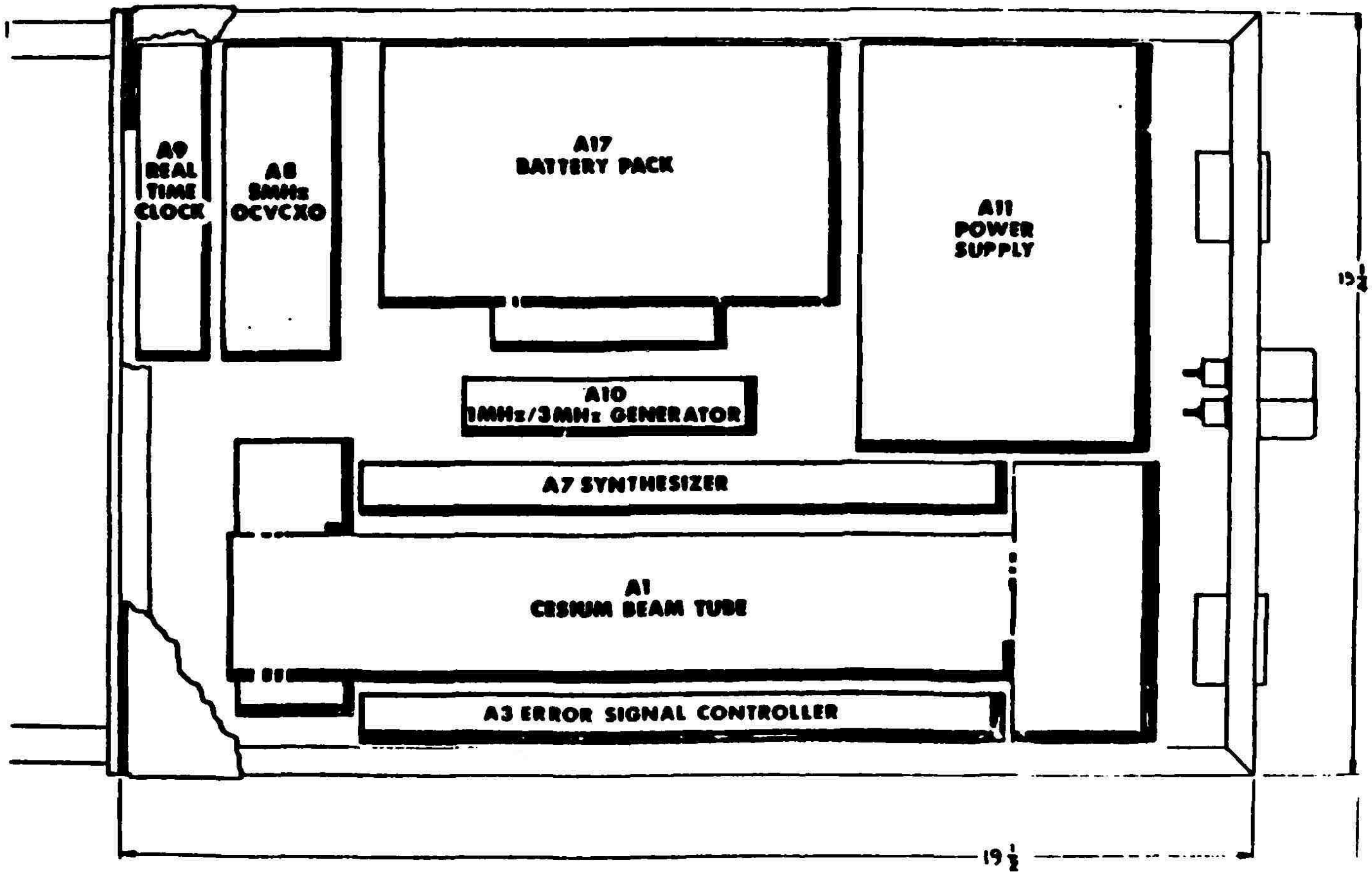

PORTABLE REAL TIME CLOCK
(PRTC)
MODEL FE-5450A

Figure 4

2.4 Environmental Characteristics

The Portable Real Time Clock has been designed to meet the environmental requirements set forth in Table 1. The PRTC was subjected to environmental testing including electromagnetic interference and radiation testing, as a part of the research, design and development program. The PRTC has passed all of the environmental tests.

The environmental tests were conducted by independent environmental testing laboratories. Their test reports along with the associated test data are available for inspection at FEI's facility in Mitchel Field, N.Y. Table 2 lists all of the first article tests performed and data submitted.

2.5 Operator Controls, Indicators and Input/Output Receptacles

The operator controls, indicators and input and output electrical receptacles on the Portable Real Time Clock are shown and identified in Figure 5.

TABLE 2 LIST OF FIRST ARTICLE TESTS AND TEST DATA

- o Pre-Environmental-Production
  Inspection Test Data
- o Environmental Test Report
  (East/West Technology Laboratory)
- o Environmental Test Data:
  - Pre-Altitude Test Data
  - Altitude Test Data
  - Humidity Test Data
  - Humidity (2nd Cycle) Test Data
  - Humidity (5th Cycle) Test Data
  - Post Humidity Test Data
  - Post Vibration Test Data
  - Post Shock and Crash Safety Test Data
  - Post Explosion Test Data
  - Post Inclination Test Data
  - Post Magnetic Environment Test Data
  - Temperature Test Data (-40°C)
  - Temperature Test Data (+65°C)

TABLE 2 LIST OF FIRST ARTICLE TESTS AND TEST DATA (CONT'D)

- Pre-Environmental Production Inspection Data
- Pre EMI, Radiation, and Temperature-
  Production Inspection Test Data
- EMI Test Report (All-Tronics Laboratory)
- Radiation Test Report (Jaycor Laboratory)
- EMI, Radiation, and Temperature Test Data:
    - Pre-Radiation Test Data
    - Post Radiation Test Data
    - Post EMI Test Data
    - Temperature (-40°C) Test Data
    - Temperature (+65°C) Test Data
- Post EMI, Radiation, and Temperature-
  Production Inspection Test Data

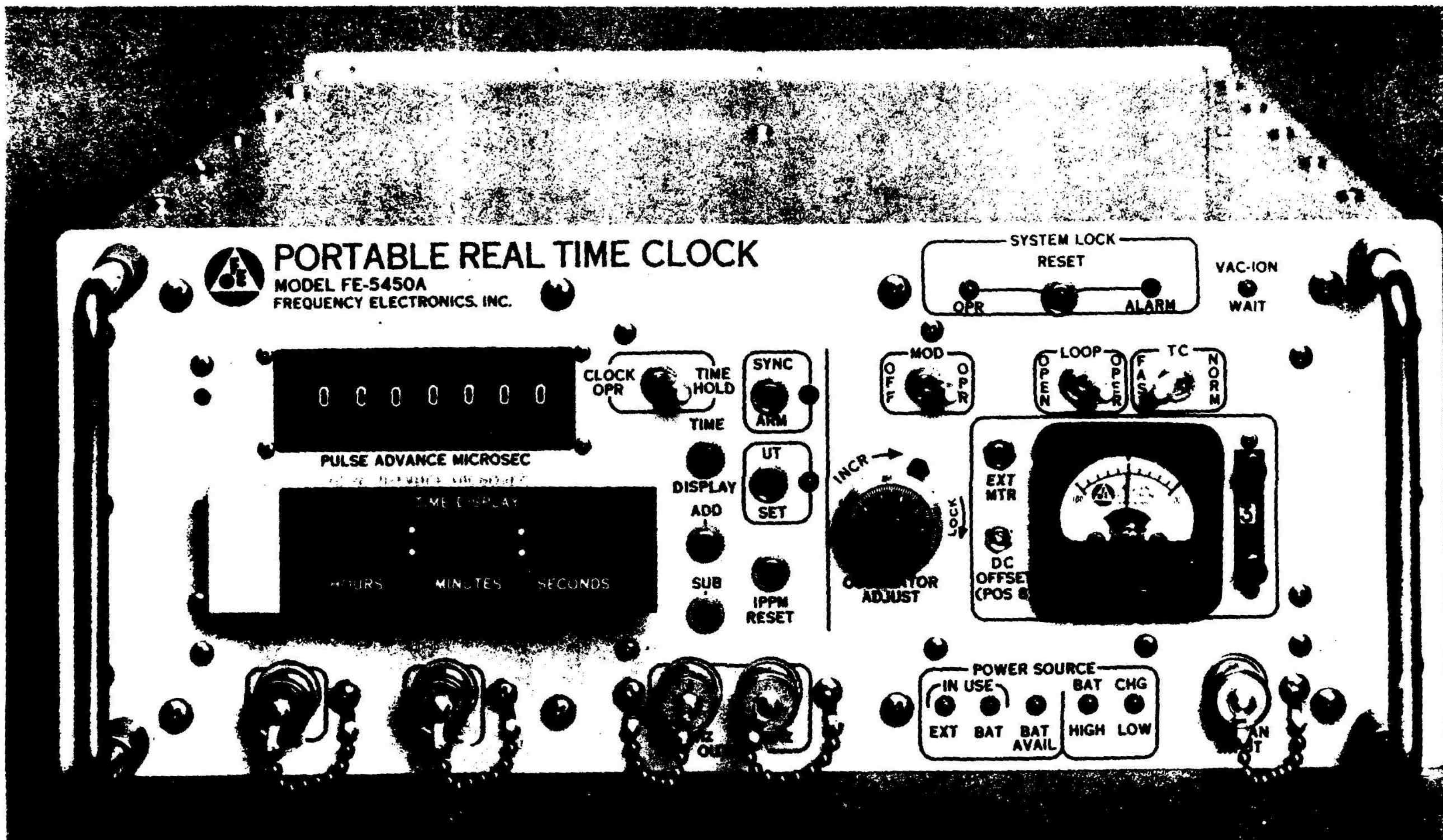

FIGURE 5 PORTABLE REAL TIME CLOCK CONTROLS, INDICATORS AND CONNECTORS, SHEET 1 OF 2

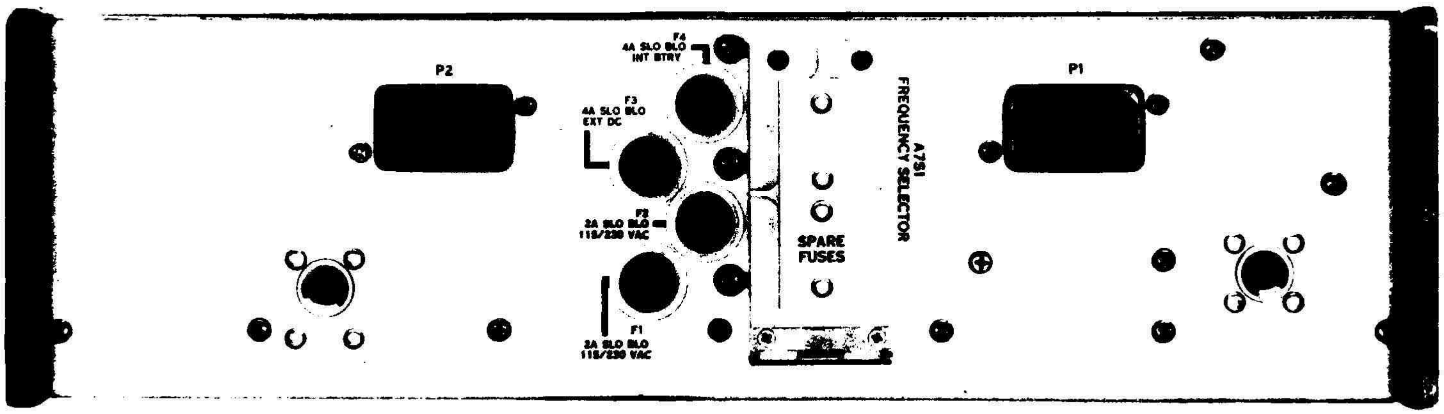

FIGURE 5 PORTABLE REAL TIME CLOCK CONTROLS,INDICATORS AND CONNECTORS, SHEET 2 OF 2

APPENDIX A

SET-UP AND OPERATING INSTRUCTIONS

A 1.0 PREPARATION FOR USE:

A 1.1 Remove top cover, set internal battery switch S1 to "ON" position.

A 1.2 Apply DC power.

NOTE:

ALLOW 20 MINUTES WARM-UP TIME FOR CESIUM BEAM RESONATOR SIGNAL LEVEL AND CRYSTAL OSCILLATOR FREQUENCY TO STABILIZE. CHECK ALL METER POSITIONS BEFORE STARTING ALIGNMENT PROCEDURE.

A 2.0 ALIGNMENT PROCEDURE:

A 2.1

A) Set the LOOP switch to "OPEN" position.

B) Set the MODULATION switch to "OFF" position.

C) Set the TIME CONSTANT switch to "FAST" position.

D) Set the METER function to Position "8".

E) Adjust DC offset for minimum meter reading.

F) Adjust "Oscillator Adjust" control to obtain maximum indication on meter and lock control.

G) Set MODULATION switch to "OPER" position.

H) Set LOOP switch to "OPER" position. After approximately 15 seconds, the operate light (green) should come on, then press reset button. The system is now operating in normal condition.

A 3.0 PHASE LOCKING AND FREQUENCY OFFSET

A 3.1 A front panel ZEEMAN INPUT connector is provided to enable the Cesium Beam Tube to be calibrated against a known ZEEMAN INPUT.

A 4.0 TIME-OF-DAY CLOCK OPERATING PROCEDURE

A 4.1 The Real Time-Of-Day Clock provides the user with a digital readout display of real-time in hours, minutes, and seconds. It provides outputs of 1 PPS at the front panel; and real- time data, and a 3 MHz squarewave at output connector P2 on the rear panel.

A 5.0 TO OPERATE CLOCK

A 5.1 To operate the Real Time-Of-Day Clock, set the CLOCK OPER/TIME-HOLD switch to CLOCK OPER. The Real Time-Of-Day display will run and show the time in hours, minutes, and seconds on the front panel numeric LED display and readout.

NOTE

UNDER INTERNAL BATTERY OPERATION, ACTIVATE PUSH TIME DISPLAY SWITCH TO ILLUMINATE LED NUMERICAL CLOCK DISPLAY.

A 6.0 SETTING TIME-OF-DAY CLOCK

A 6.1 Set CLOCK OPER/TIME HOLD switch to TIME HOLD. Check reference time and push ADD/SUB switch to add or subtract, while simultaneously depressing the HOURS, MINUTES, and/or SECONDS button, to reference time setting seconds to two (2) seconds later than true reference time. When true reference time reaches Portable Real-Time Clock time, set the CLOCK OPER/TIME HOLD switch to CLOCK OPER.

A 7.0 1 PPM RESET

A 7.1 To reset the 1 PPM pulse to within $\leq$ 100 nanoseconds delay from time coincidence with any selected 1 PPS output over a one (1) minute period, activate the 1 PPM RESET button and note that:

(a) The SECONDS count goes to 00, and

(b) The MINUTES count advances to the next minute.

A 8.0 UNIVERSAL TIME (UT) SET

A 8.1 The Universal Time (UT) SET control allows for correction of the SECONDS TIMING to National Bureau of Standards corrections issued periodically for variances in standard time. Each actuation of the UT SET button will subtract one (1) second from the real-time. (Delay the seconds count by one (1) second).

A 9.0 SYNCHRONIZATION

A 9.1 To synchronize the clock 1 PPS, 1 PPM and second mark to the leading edge of an external sync pulse automatically with a preset advance, proceed as follows:

(a) Apply synchronizing pulse to SYNC IN connector on the front panel.

(b) Depress SYNC ARM pushbutton.

(c) SYNC ARM indicator will light.

(d) Upon occurrence of clock synchronization to the external sync pulse, the SYNC ARM light will be extinguished.

A 10.0 CLOCK DISPLAY ILLUMINATION (BATTERY OPERATION)

A 10.1 During internal battery operation, the clock display is not lit in order to conserve battery power. To illuminate the clock display in this mode, actuate the TIME DISPLAY pushbutton.

A 11.0 PULSE ADVANCE MICROSEC

A 11.1 The timing of the pulses is adjusted via the PULSE ADVANCE MICROSEC thumbwheel switches on the front panel in seven (7) discrete steps of 100, 10, and 1 millisecond; and 100, 10, 1, and 0.1 microseconds, over a range of 1 second. This allows the 1 PPS lead edge, 1 PPM trailedge, and second mark trailedge to be coincident with each other within 1.0 microsecond.

A 12.0 TIMING FAULT OUTPUTS

A 12.1 Timing fault outputs are automatically available at the rear connector (P2), on the occurrence of a fault. During no-fault operation, the output level is in the range of 3.0 Vdc to 5.5 Vdc. During abnormal operation, the timing fault output level is in the range of 0 Vdc to 0.5 Vdc.

APPENDIX B

LINE POWER CONVERTER DATA

SPECIFICATIONS AND FEATURES

D.C. OUTPUT - Voltage regulated for line and load. See Table 1 for voltage and current ratings.

TABLE 1

MODELS	VOLTAGE RANGE	MAXIMUM CURRENT (AMPS)* AT AMBIENT TEMPERATURE				INPUT POWER (WATTS)**
		40°C	50°C	60°C	71°C	
LNS-W-5-OV	5±5%	14.0	12.2	10.0	7.5	220
LNS-W-6	6±5%	13.0	11.1	9.3	6.8	220
LNS-W-12	12±5%	8.5	7.2	5.9	4.2	255
LNS-W-15	15±5%	7.7	6.7	5.5	3.8	255
LNS-W-20	20±5%	6.1	5.2	4.2	3.0	255
LNS-W-24	24±5%	5.4	4.6	3.7	2.5	255
LNS-W-28	28±5%	4.7	4.0	3.2	2.2	255

Current range must be chosen to suit the appropriate maximum ambient temperture. Current ratings apply for entire voltage range.

*Ratings apply for use with cover removed. Derate current 15% for each ambient temperature if cover is used. Refer to Figure 11 for cover removal.

**With output loaded to full current rating and input voltage 127 volts AC, 60 Hz.

REGULATED VOLTAGE OUTPUT

Regulation (line)..........0.1% for input variations from 105-127, 127-105, 210-254, or 254-210 volts AC.

Regulation (load)..........0.1% for load variations from no load to full load or full load to no load.

Ripple and Noise...........1.5m V rms, 5m V peak to peak with either positive or negative terminal grounded.

Temperature Coefficient....Output change in voltage 0.03%/°C.

Remote Programming

External Resistor........Nominal 200 ohms/volt output.

Programming Voltage......One-to-one voltage change.

Remote Sensing.............Provision is made for remote sensing to eliminate effect of power output lead resistance on DC regulation.

OVERSHOOT - No overshoot under conditions of power turn-on, turn-off, or power failure.

AC INPUT - 105-127 or 210-254† volts AC at 47-440 Hz. Standard LNS-W power supplies are factory wired for 105-127 volt input, but can be rewired for 210-254 volt input. For input power see Table I. Ratings apply for 57-63 Hz input. For 47-53 Hz or 63-440 Hz input consult factory.

†Certified by Canadian Standards Association for 210-250 volt input.

OUTPUT PROTECTION

Thermal.....................Thermostat, resets automtically when over temperature condition is eliminated.

Electrical..................Automatic electronic current limiting circuit, limits output current to a safe value. Automatic current limiting protects the load and power supply when external overloads and direct shorts occur.

INPUT AND OUTPUT CONNECTIONS

AC input....................Screw terminals on printed circuit board

Ground......................Terminal on transformer

DC output...................Screw terminals on printed circuit board

Sensing....................Screw terminals on printed circuit board

Overvoltage Protection.....Quick disconnect terminals on printed circuit board with mating connectors attached.

OPERATING AMBIENT TEMPERATURE RANGE AND DUTY CYCLE - Continuous duty from 0°C to 71°C ambient with corresponding load current ratings for all modes of operation.

STORAGE TEMPERATURE (non operating) - -55°C +85°C

FUNGUS - All LNS-W power supplies are fungus inert.

DC OUTPUT CONTROL - Screwdriver voltage adjust control permits adjustment of DC output voltage. Refer to Figure 11 for location of control.

PHYSICAL DATA

Size......................	9" x 5" x 2-7/8" with cover in place 9" x 4-7/8" x 2-3/4" with cover removed
Weight....................	9 lbs. net; 9-1/2 lbs. shipping
Finish....................	Gray, FED. STD. 595 No. 26081

MOUNTING - Three surfaces, two with tapped mounting holes and one with clearance mounting holes, can be utilized for mounting this unit. Air circulation is required when unit is mounted in confined areas.

"J" OPTION - All LNS-W power supplies can be obtained for 90-110 VAC, 47-440 Hz input. Ratings apply for 57-63 Hz input. For 47-53 Hz or 63-440 Hz input consult factory.

ACCESSORIES

Overvoltage Protector......	Internally mounted L-20-OV series Overvoltage Protectors are available.

MISSION
of
Rome Air Development Center

RADC plans and executes research, development, test and selected acquisition programs in support of Command, Control Communications and Intelligence (C^3I) activities. Technical and engineering support within areas of technical competence is provided to ESD Program Offices (POs) and other ESD elements. The principal technical mission areas are communications, electromagnetic guidance and control, surveillance of ground and aerospace objects, intelligence data collection and handling, information system technology, ionospheric propagation, solid state sciences, microwave physics and electronic reliability, maintainability and compatibility.

Printed by
United States Air Force
Hanscom AFB, Mass. 01731

AD-A146 218 PORTABLE REAL-TIME CLOCK(U) FREQUENCY ELECTRONICS INC MITCHEL FIELD NY M MEIRS MAY 84 RADC-TR-84-102 F19628-78-C-0094 1/1

UNCLASSIFIED F/G 14/2 NL

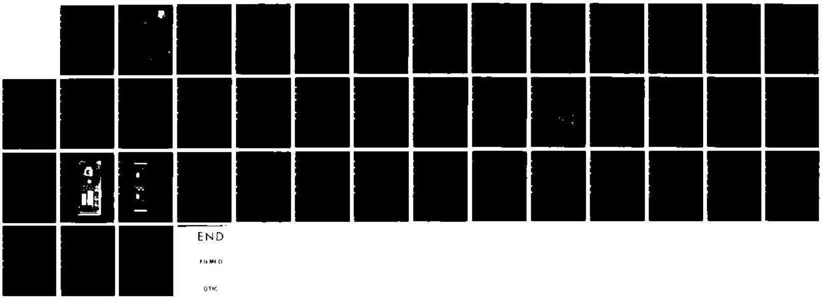

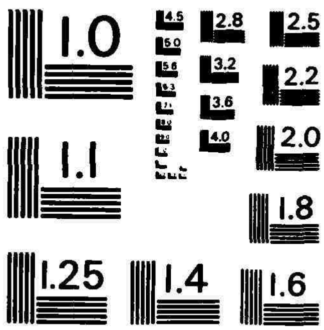
1.0
1.1
1.25
1.4
1.6
1.8
2.0
2.2
2.5
2.8
3.2
3.6
4.0
4.5
5.0
5.6

CHAPTER 5

THEORY OF OPERATION

5-1. SCOPE. This chapter presents theory of operation for the MRC. A system level block diagram discussion is given in Section I. Section II provides block diagram discussions for the subsystems of the MRC.

Section I. FUNCTIONAL SYSTEM OPERATION

5-2. OVERALL DISCUSSION. The MRC includes an atomic frequency standard and a real time-of-day clock that are referenced to an integral atomic clock primary frequency standard. A functional system block diagram of the MRC is shown in figure 8-1. The atomic clock primary frequency standard includes the primary loop subsystem (modules A1, A3, A4, A5, and A6), and the secondary loop subsystem (modules A7 and A8). The real time-of-day clock (module A9) and the atomic frequency standard (module A10 and an output of module A8) form the output subsystem of the MRC. A low voltage power supply subsystem furnishes the required operating power. A monitoring (metering) and alarm subsystem is distributed throughout the other subsystems to support built-in testing and operator warning functions should the system fail. Cesium beam power supplies are covered with module A1 under the primary loop subsystem.

a. The primary loop subsystem generates a frequency of 14.59 + MHz in primary 14.59 + MHz oven-controlled, voltage controlled, crystal oscillator (OCVCXO) module A4. Cesium beam resonator assembly A1 serves to atomically stabilize the 14.59 + MHz primary loop frequency using as a standard the constant resonant frequency (9.19 + GHz) of the $(4,0) \rightarrow (3,0)$ hyperfine energy-level transition of the Cesium 133 atom.

b. The secondary loop subsystem synthesizes a signal which is phase locked to the primary loop frequency standard. The output of the secondary loop subsystem is then used to drive the functions in the output subsystem of the MRC.

c. The output subsystem provides for operation of the MRC as an atomic frequency standard and as a real time-of-day clock. As an atomic frequency standard, the output of the MRC is from 1 MHz, 3 MHz generator module A10 which provides a 1 MHz sinusoidal output and a 3 MHz square wave output. An additional output at 5 MHz is also available from module A8. As a real time-of-day clock, the output of the MRC is from module A9 which provides a front panel LED time display in hours, minutes, and seconds, and additional timing information in the form of real-time data and 1 PPS and 1 PPM outputs.

d. A low voltage power supply subsystem provides operating dc voltages for the electronic circuits of the MRC. The supply operates the MRC from external 115 V ac power, automatically switches to external 20 to 30 V dc power if ac fails, then automatically switches to internal battery power if external dc fails. A charging system to maintain battery condition also is provided.

Section II. FUNCTIONAL OPERATION OF ELECTRONIC CIRCUITS

5-3. INTRODUCTION. Detailed block diagram discussions are presented in the paragraphs that follow for the primary loop, secondary loop, output, and low voltage power supply subsystems of the MRC. The monitoring (metering) and alarm subsystem is shown in the block diagrams and is discussed where applicable in the course of covering the functional subsystems.

5-4. PRIMARY LOOP SUBSYSTEM. The primary loop subsystem generates the atomically stabilized primary frequency standard basic to MRC operation. A functional block diagram of the primary loop subsystem is shown in figure 8-2. The primary loop subsystem consists of primary 14.59 + MHz OCVCXO module A4, X630 multiplier module A5, waveguide A6, Cesium beam resonator assembly A1, and primary loop module A3.

a. Primary 14.59 + MHz OCVCXO Module A4. Primary 14.59 + MHz OCVCXO module A4 operates at a crystal controlled frequency of 14,591,479.0022 Hz. This is 1/630 of the resonant frequency of the Cesium 133 atomic reference (9,192,631,771.39 Hz). The output signal of this oscillator is the control for the exciting energy initiating the Cesium energy level transitions.

(1) Oven. The 14.59 + MHz oscillator is a sealed unit contained within an integral oven assuring isolation from environmental temperature variations. Oven temperature is monitored by the MRC front panel CIRCUIT CHECK meter.

(2) DC control voltage. A front panel PRIMARY LOOP SLEW switch is used to set the nominal operating frequency of the OCVCXO oscillator near the locked 14.59 + MHz frequency when performing routine adjustments.

(3) VCO control signal. The VCO control signal is derived from the Cesium resonator output and is the primary frequency stabilizing input to the OCVCXO oscillator.

(4) 14.59 + MHz outputs. Two stabilized outputs are derived from the OCVCXO oscillator, one going to X630 multiplier module A5 and from there to Cesium beam resonator assembly A1 completing the primary loop; the second going to synthesizer module A7 in the secondary loop, part of the primary-secondary loop linkage.

(5) FM modulation. The 14.59 + MHz output of the OCVCXO oscillator is frequency modulated by a square wave at an 83.3 Hz rate; the modulating signal derived from primary loop module A3. The FM deviation about the voltage controlled center frequency provides the necessary error sense signal required for servo feedback.

b. X630 Multiplier Module A5. The frequency modulated 14.59 + MHz output of the OCVCXO oscillator is multiplied by 630 in X630 multiplier module A5. The output of X630 multiplier module A5 is 9.19 + GHz.

(1) X18 multiplier. The 14.59 + MHz signal is multiplied by 18 to 262 + MHz in X18 multiplier (A5) A1Q1,Q2,Q3,A1U1, and A1CR2.

(2) Tuned filter. Harmonics other than 262 + MHz are removed by tuned filter (A5) L1-L4 and C2-C8.

(3) 262 MHz amplifier. Gain and isolation are supplied by 262 + MHz amplifier A5A2.

(4) X35 multiplier. The 262 + MHz from the 262 MHz amplifier is multiplied by X35 multiplier A5AT1 to 9.19 + GHz plus harmonics.

(5) Microwave filter. Harmonics of the 262 + MHz frequency other than 9.19 + GHz are filtered by the microwave filter.

(6) Ferrite circulator. Coupling into waveguide A6 and the 9.19 + GHz level control is accomplished by ferrite circulator A5HY1.

(7) Dual compensator. Bias levels for the multiplier components and temperature variation compensation are provided by dual compensator A5A3.

c. Waveguide A6. Waveguide A6 is a mechanically tuned cavity designed to accept and be optimally tuned to the 9.192 + MHz frequency output of X630 multiplier module A5. The input signal level is set by the ferrite circulator on module A5. The waveguide 9.19 GHz output is directly connected to the input port of Cesium beam resonator assembly A1.

d. Cesium Beam Resonator Assembly A1.

(1) General. Cesium beam resonator assembly A1 is an atom-microwave interaction device. It employs the resonant frequency (9,192,631,771.39 Hz) of the (4,0)→(3,0) hyperfine energy-level transition of Cesium 133 in a C-field (weak dc magnetic field) of 57.1 millioersteds as a primary frequency reference. With the single exception of magnetic field, the transition frequency is completely independent of all environmental conditions. For the Atomic Time (AT) scale, the resonant frequency (f_o) of the (4,0)→(3,0) hyperfine energy-level transition of Cesium 133 under zero-magnetic-field conditions is defined to be exactly 9,192,631,770 Hz. The weak dc magnetic field, known as the C-field, is used to orient the Cesium atoms with respect to the ac magnetic component of the linearly polarized microwave field.

(2) Cesium beam tube. The Cesium beam tube contains the reservoir of liquid Cesium, the vaporizing mechanism, beam forming elements, an atom-microwave interaction region, and the means for detecting energy transitions.

(3) Oven. In the beam tube within the oven, liquid Cesium is heated to 85°C to 90°C (194°F to 203°F) causing vaporization. The Cesium vapor is the source of Cesium atoms for excitation.

(4) VAC-ION pump. As the entire process of vaporizing, exciting, and detecting excited Cesium atoms must occur in a high vacuum, a VAC-ION pump is used. The VAC-ION pump is integrally a part of the input selector magnet B. In the pump, electrons are emitted from a cold cathode and travel in spiral paths toward an anode maintained at a nominal potential of +3000 V dc. These electrons ionize stray particles within the vacuum envelope. The negatively ionized particles are attracted to the highly positive anode of the pump. Spiral electron paths are produced by application of a dc magnetic field provided by the associated selector magnet. Use of spiral paths greatly increases the probability that electrons ionize stray particles, and thus improves pumping efficiency.

(5) Interlock. The +3000 V dc input to the VAC-ION pump is also applied to a resistive voltage divider within the resonator. This divider also provides the VAC-ION pump interlock signal that enables VAC-ION supply A24. Power can be supplied to the Cesium oven, the hot wire ionizer, and the electron multiplier only when the high voltage input to the VAC-ION pump is greater than approximately +2000 V dc. This protects the resonator against the damage or destruction that might result from operation in the absence of adequate vacuum pumping.

(6) Input selector magnet A. The collimated beam of Cesium atoms escaping from the Cesium vapor pool contains both desired ($f = 4$, $m_f \neq -4$) atoms and undesired ($f = 3$ and $f = 4$, $m_f = -4$) atoms. Magnet A deflects all ($f = 4$, $m_f \neq -4$) atoms toward the atom-microwave interaction region and diverts ($f = 4$, $m_f = -4$) and all ($f = 3$) atoms away from the interaction region.

(7) C-field coil. A weak dc magnetic field is required to orient the Cesium atoms entering the interaction region with respect to the ac component of the linearly polarized microwave energy emanating from waveguide A6. This is known as the C-field and is induced by the C-field coil when C-field current from C-field supply A1A3 is on. It is necessary to measure and adjust the C-field with great accuracy. For this purpose, the resonant Zeeman frequency (f_z) of the $(4, -3) \rightarrow (4, -4)$ hyperfine energy-level transition of Cesium 133 is employed, via the Zeeman frequency flop coil.

(8) Atom-microwave interaction region. The atom-microwave interaction region is where the Cesium 133 hyperfine energy transitions take place.

(a) The 9.192 + GHz excitation energy entering through waveguide A6 is linearly polarized by the mechanical coupling into the microwave cavity.

(b) Cesium atoms in this same region are oriented parallel to the microwave energy by the C-field magnetic lines of force. When the microwave excitation energy is near the natural resonant frequency of Cesium 133 hyperfine energy transition, transitions occur.

(c) The hyperfine energy-level transitions of an atom are specified by the initial and final values of two quantum numbers (f, m_f). Quantum number f determines the magnitude of the grand total angular momentum vector associated with the atom. Quantum number m_f determines the projection of this vector on a preferred direction in space, and thus specifies the orientation of the vector with respect to the preferred direction. The parallel orientation of the C-field versus microwave energy polarization has established the preferred direction (m_f).

(d) As the injected microwave energy nears the hyperfine transition frequency, the number of transitions occurring increases. When the two frequencies coincide, the number of $(4,0) \rightarrow (3,0)$ transitions is at a maximum, and the output of the beam tube peaks. This provides the control indication which allows the Cesium beam tube to act as a frequency standard.

(e) To ensure an error signal suitable to operate the primary loop as a servo system, an 83.3 Hz square wave is used to frequency modulate the microwave signal, providing a known constant variation about the center resonant frequency.

(9) Output selector magnet B. The output selector magnet B directs the desired Cesium atoms that have undergone the $(4,0) \rightarrow (3,0)$ energy level transition toward the hot wire ionizer, and diverts any undesired Cesium atoms that have not undergone transitions.

(10) Hot wire ionizer. The Cesium atoms from which the resonator output signal is obtained impinge upon the hot wire ionizer. This ionizer converts the atomic beam to an ionic beam. Positively charged Cesium ions are attracted by the electron multiplier.

(11) Electron multiplier. The positively charged Cesium ions emanating from the hot wire ionizer are attracted to the dynode of the electron multiplier, which is maintained at a potential of approximately -1.5 KV dc. This dynode converts the ionic beam to an electron beam, which is multiplied to a usable intensity by a chain of secondary-emission stages. Decreasingly negative voltage inputs for the successive secondary-emission stages are obtained from a resistive voltage divider chain, which is connected between the dynode and ground. The output from the electron multiplier drives preamplifier assembly A1A2.

(12) Preamplifier A1A2. The beam tube output signal is amplified by low-noise current preamplifier A1A2 prior to application to the oscillator control circuit. The preamplifier matches the relatively high output impedance of the electron multiplier to the relatively low input impedance of the voltage preamplifier in primary loop module A3.

(13) Cesium beam power supplies. The Cesium beam power supplies supply operating voltages for the electron multiplier, hot wire ionizer, VAC-ION pump, C-field coil, and the Cesium oven.

(a) VAC-ION supply A24. The VAC-ION supply provides a +18 V dc controlled voltage to the -HV power supply and regulator A23, +6 V dc regulator hot wire power supply A19, Cesium oven control A1A4, C-field supply A1A3, and high voltage supply A22. Input to the VAC-ION supply is from +18 V regulator A12. A monitor signal from high voltage power supply A22 holds relay K1, contained in A24, on. Should high voltage fail, relay A24K1 opens disabling the +18 V dc output.

(b) High voltage power supply A22. High voltage power supply A22 provides approximately +3000 V dc to operate the VAC-ION pump. In addition, a monitor voltage is supplied to relay K1 in VAC-ION supply A24. Should the output of module A22 fail, damage to the Cesium beam tube would result as it would operate without the necessary high vacuum. Protection from this possibility is provided by relay A24K1.

(c) -HV power supply A21 and regulator A23. Approximately -2.6 KV dc is supplied to operate the electron multiplier by A21 and its associated regulator A23. The successive stage operating voltages for the electron multiplier are provided by resistive voltages dividers from the -2.6 KV output.

(d) +6 V regulator hot-wire power supply A19. The current required to operate the hot wire ionizer is provided by module A19.

(e) Oven control and C-field. The +18 V dc from module A24 is supplied directly to oven control A1A4 and the C-field coil via relay A24K1.

(14) VAC-ION and Cesium ion metering. Monitoring of VAC-ION and Cesium ion currents is accomplished by the CIRCUIT CHECK meter with the appropriate setting of the MRC front panel CIRCUIT CHECK switch.

(15) Oven control metering. Monitoring of the oven control circuit is accomplished by the CIRCUIT CHECK meter with the appropriate setting of the MRC front panel CIRCUIT CHECK switch.

e. Primary Loop Module A3. Primary loop module A3 supplies the 83.3 Hz modulating signal for the 14.59 + MHz oscillator and senses the 83.3 Hz error signal from the Cesium beam resonator. These two signals are detected by a synchronous detector to produce the dc control voltage for the primary 14.59 + MHz OCVXCO oscillator. The 83.3 Hz input from the Cesium beam resonator assembly preamplifier is fed to an 83.3 Hz error amplifier whose output is fed to a synchronous detector. Simultaneously, an 833.3 Hz input is fed to a ÷5 circuit A3U15, whose output of 166.6 Hz is fed to a variable delay circuit, which serves to retard this signal (2 milli seconds) to compensate for the delay experienced in the electron flow through the Cesium beam resonator assembly. The 166.6 Hz signal is fed to ÷2 circuit A3U4B, and the resultant 83.3 Hz is fed to the 83.3 Hz delay input, where it is fed to synchronous detector A3U7 along with the 83.3 Hz signal derived from the resonator assembly. These two inputs form the loop and they are detected by stage A3U7. If they are in synchronism, there is no change in the output level of integrator circuit A3A1. If there is a difference in frequency, it is detected, and the change in dc control voltage to OCVCXO module A4 corrects the 14.59 + MHz OCVCXO output frequency accordingly so that the loop is locked.

f. Primary VCO Metering. The dc control voltage generated by primary loop module A3 is monitored by the CIRCUIT CHECK meter with the appropriate setting of the MRC front panel CIRCUIT CHECK switch.

g. Primary VCO Logic and Excess AC and Distortion Logic Alarms. The primary loop module also provides excess ac error and second harmonic level outputs to logic alarm (A26) U4, U5 which provides visual warning on the MRC front panel should the primary loop become unlocked or be operating beyond specified tolerances.

5-5. SECONDARY LOOP SUBSYSTEM. The secondary loop subsystem, shown in the functional block diagram of figure 8-3, consists of synthesizer module A7 and secondary 5 MHz OCVCXO module A8.

a. Secondary Loop Phase Lock. The secondary loop is phased-locked to the primary loop, and therefore, retains the accuracy and stability factors of the 14.59 + MHz frequency. The 14.59 + MHz input to synthesizer module A7 is referenced to the resonant frequency (9,192,631,771.39 Hz) of the (4,0)→(3,0) hyperfine energy-level transition of Cesium 133 in the C-field. Synthesizer module A7 performs the conversions required to maintain the accuracy of outputs referenced to the Cesium beam tube.

b. Synthesizer Module A7. Synthesizer module A7 receives a stabilized 14.59 + MHz OCVCXO signal from module A4 and the 5 MHz OCVCXO signal from module A8. The synthesizer generates an 833.3 Hz signal which is fed to primary loop module A3 in the primary loop; and 5 MHz signals which provide a secondary loop alarm signal and feed real time-of-day clock A9. A dc control voltage controls secondary 5 MHz OCVCXO module A8 to provide the input signal to 1 MHz, 3 MHz generator module A10.

(1) 14.59 + MHz input. The frequency modulated 14.59 + MHz output of primary OCVCXO module A4 is applied directly into synthesizer module A7.

(2) 5 MHz input. The 5 MHz output of secondary OCVCXO module A8 is inputted directly into synthesizer module A7. The 5 MHz signal is multiplied and processed within the synthesizer and locked to the 14.59 + MHz signal via an internal phase locked loop.

(3) 5 MHz control voltage output. The processed 5 MHz signal is detected in a synchronous detector with the 14.59 + MHz signal in a phase detector whose output level is determined by the difference in phase between the two signals. This output signal is processed and becomes the 5 MHz OCVCXO oscillator control voltage.

(4) 833.3 Hz output. The 5 MHz output from OCVCXO module A8 is processed in synthesizer module A7 and mixed with the modulated 14.59 + MHz output from OCVCXO module A4 to derive a stabilized 833.3 Hz signal. This signal is returned to the primary loop subsystem via

primary loop module A3 where it is divided by 10 to become the 83.3 Hz modulating square wave for primary 14.59 + MHz oscillator A4. This completes the loop locking the secondary loop subsystem to the primary loop subsystem.

(5) 5 MHz outputs. Two 5 MHz square wave outputs are derived in synthesizer module A7 to drive real time-of-day clock A9 and 1 MHz, 3 MHz generator module A10.

(6) Loop lock and secondary VCO. Visual alarms indicating the operating status of the secondary loop subsystem are driven by the loop lock and secondary VCO outputs of synthesizer module A7.

(7) Secondary phase detector output. Front panel visual warning of secondary loop out of lock condition is obtained from the secondary phase detector output.

c. Secondary 5 MHz OCVCXO Module A8. The 5 MHz sinusoidal output required to drive synthesizer module A7 waveshaping circuits is generated in secondary 5 MHz OCVCXO module A8. The 5 MHz output is locked to the 14.59 + MHz primary OCVCXO output via circuitry within synthesizer module A7. Accuracy is maintained via a control voltage generated by synthesizer module A7 from the comparison of the processed 5 MHz signal with the 14.59 + MHz signal.

(1) Oven. The 5 MHz secondary OCVCXO module A8 is contained within an integral oven to assure isolation from environmental temperature variations.

(2) 5 MHz oven sensor. Secondary OCVCXO oscillator oven temperature is monitored by the CIRCUIT CHECK meter with the appropriate setting of the MRC front panel CIRCUIT CHECK switch.

5-6. OUTPUT SUBSYSTEM. The output subsystem includes the real time-of-day clock module A9 and the 1 MHz, 3 MHz generator module A10. (Module A8 provides a 5 MHz front panel output signal for the output subsystem.)

a. Real Time-of-Day Clock. Real time-of-day clock module A9 provides real time-of-day information via direct readout LED numerical indicators on the front panel, front and rear panel 1 PPS and 1 PPM outputs, and real-time data timing information via rear panel connectors. This information is derived from the 5 MHz output of synthesizer module A7. A functional block diagram of the real time-of-day clock is shown in figure 8-4. The real-time-of-day clock is a removable module, designated A9, located on the left front panel of the MRC. A hinged cover prevents inadvertent operation of controls but presents the LED numerical time display visibly. Cable connections are accessible on the front panel and outputs (described in table 2-5) are available through connector P2 on the rear panel. The clock module receives as an input the 5 MHz input time base signal applied from synthesizer module A7.

(1) External sync. Should the clock be operated in the external synchronization mode, a 1 PPS synchronizing input is received via SYNC IN jack A9J4 on the front panel.

(2) Outputs. 1 PPS and 1 PPM outputs are available on the front panel via 1PPS OUTPUT jack A9J2 and 1PPM OUTPUT jack A9J3, as well as via connector P2 on the rear panel. Additional BCD real-time data also are available via rear panel connector P2. (Refer to table 2-5.)

(3) Input. The 5 MHz driving input signal from synthesizer module A7 enters the time-of-day clock through A9J1 in the panel interface circuit.

(4) X2 multiplier. The 5 MHz input is multiplied by an X2 multiplier (A9) U1A, U4A, U5A to 10 MHz, which is then fed to a series of logic circuits on the main counter.

(5) Main counter. The main counter logic processes the 10 MHz input and generates 100 kHz, 1 PPS, and 1 PPM signals. These signals are used as time bases to actuate the preset advance counter, seconds, minutes, hours counter, and synchronizes the real-time data outputs. The main counter also accepts UT set, and 1 PPM reset inputs to provide 1 PPS and 1 PPM time base information. The timing diagram shown in figure 5-1 illustrates the timing relationship between the various pulse trains.

(6) Preset advance counter. The time base information generated in the main counter is inputted to the preset advance counter, which provides a delay of 0.1 microsecond to 1 second, via front panel thumbwheel switches so that the time of the second mark, and the 1 PPS and 1 PPM outputs are adjustable over a range of 1 second in discrete steps of 100, 10, 1, and 0.1 microseconds. The 1 PPS lead edge, 1 PPM trail edge, and second mark trail edge are coincident with each other within 1.0 microsecond. The timing sequence for the preset advance counter is shown in figure 5-1.

(7) Seconds, minutes, hours counters. The seconds, minutes, hours counters generate time signals coincident with the passage of time units from the delayed pulse inputs provided by the preset advance counter. The seconds and minutes counters count from 0 to 59, and the hours from 0 to 24. See figure 5-1 for the seconds, minutes, and hours timing operations. The interrelationships of various control functions of the clock are shown in the timing diagram, such as external sync set and arm, add, and subtract, 1 PPS advance, time hold, clock operate, as well as transfer signals to the real-time outputs. Figure 5-1 also shows the 1 PPS advance timing, the sync arm synchronization sequence for external sync operation of the clock, the pulse advance, the UT set timing, and the 1 PPM reset timing, in addition to other timing information required for understanding the clock operation. The outputs of the seconds, minutes, and hours circuits are used to provide the direct numerical clock front panel readout and the real-time data information available at the rear panel connectors.

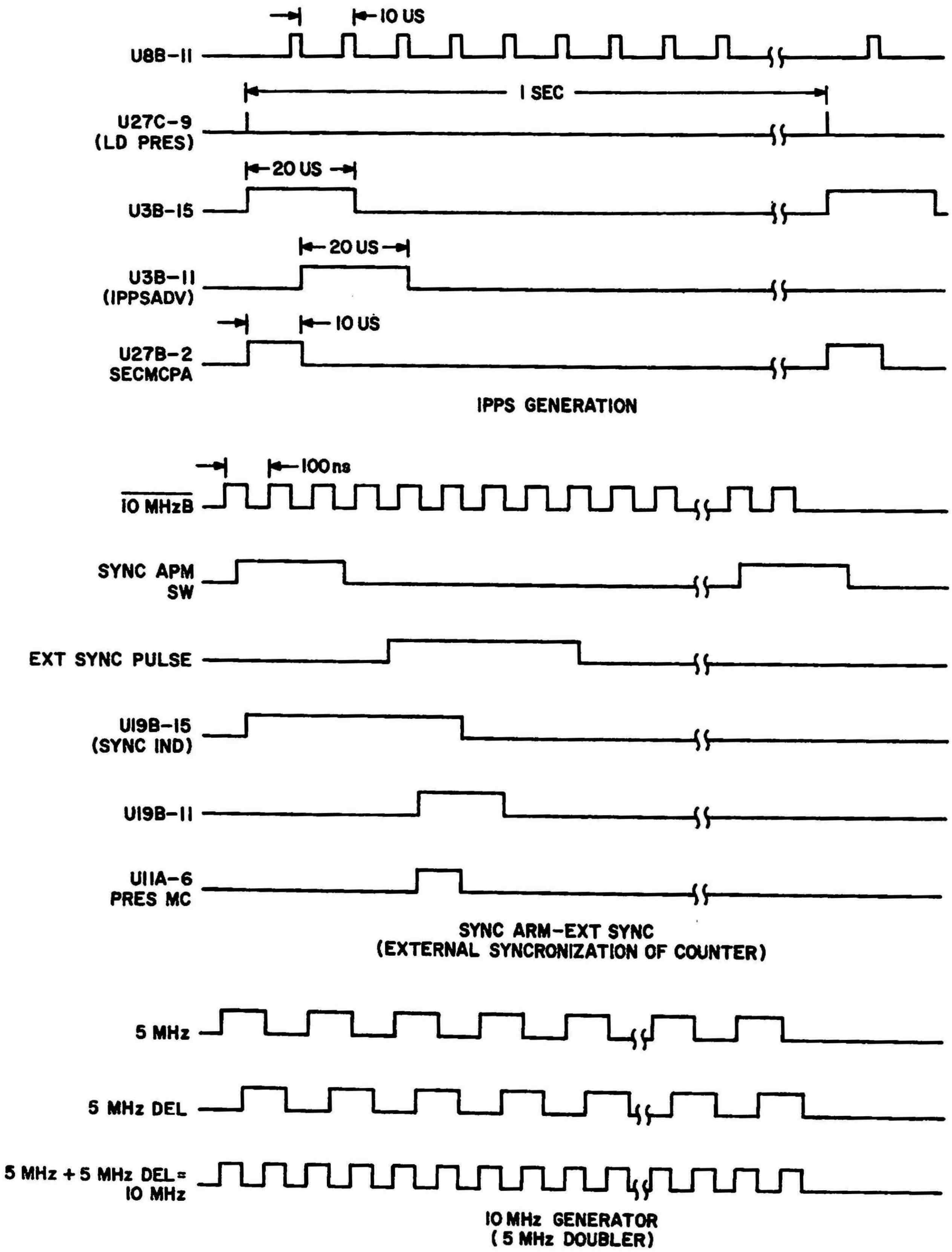

Figure 5-1. Real Time-of-Day Clock Module A9, Timing Diagram
(Sheet 1 of 5)

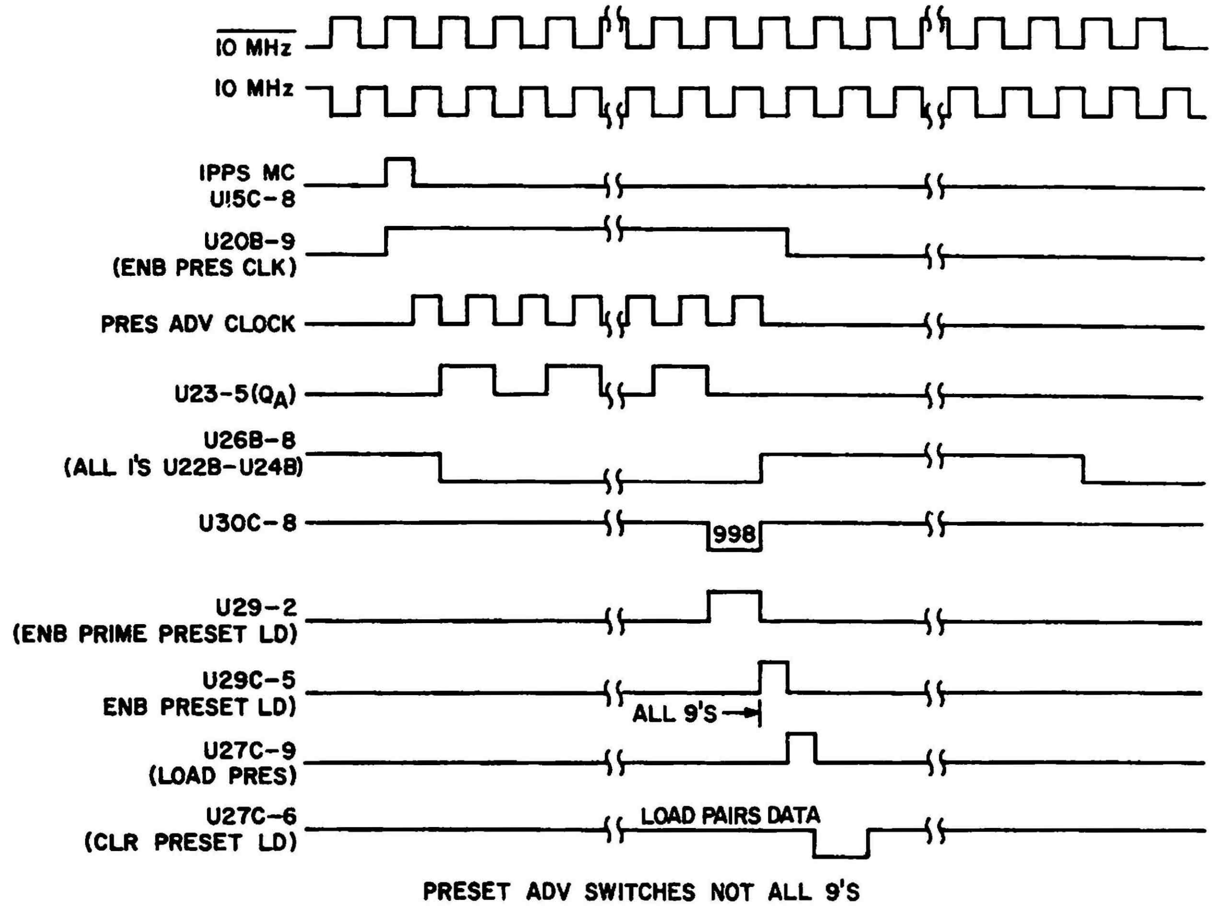

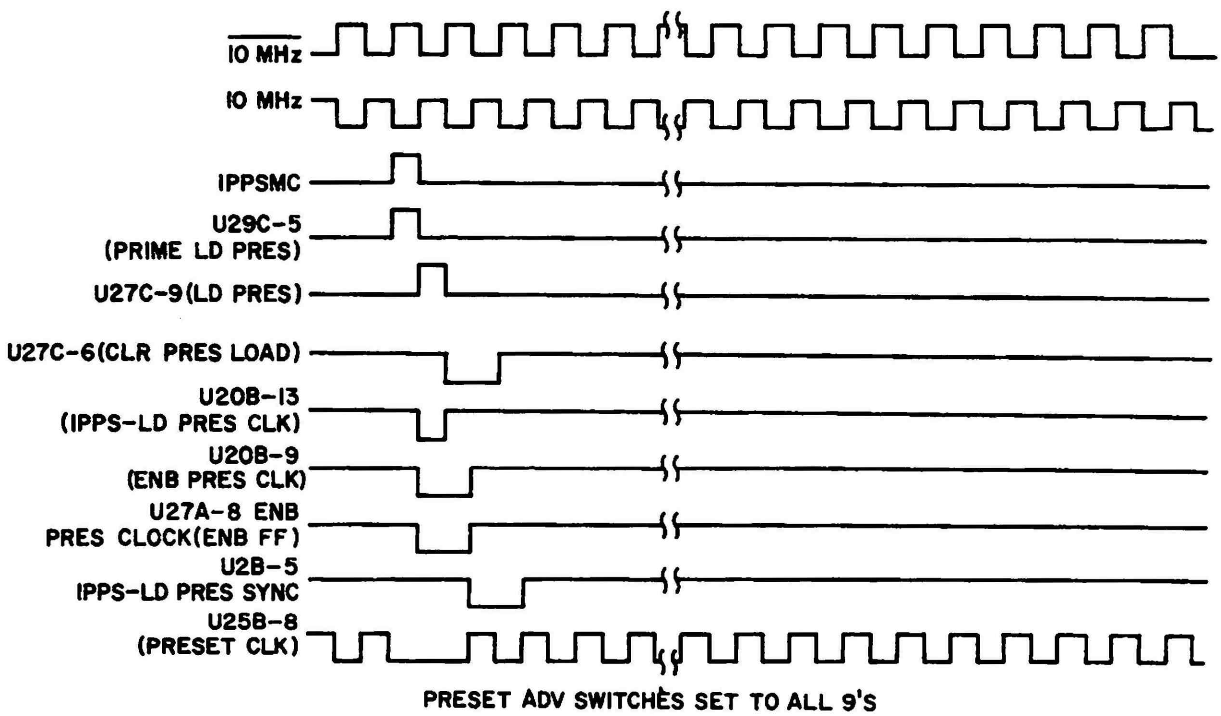

Figure 5-1. Real Time-of-Day Clock Module A9, Timing Diagram
(Sheet 2 of 5)

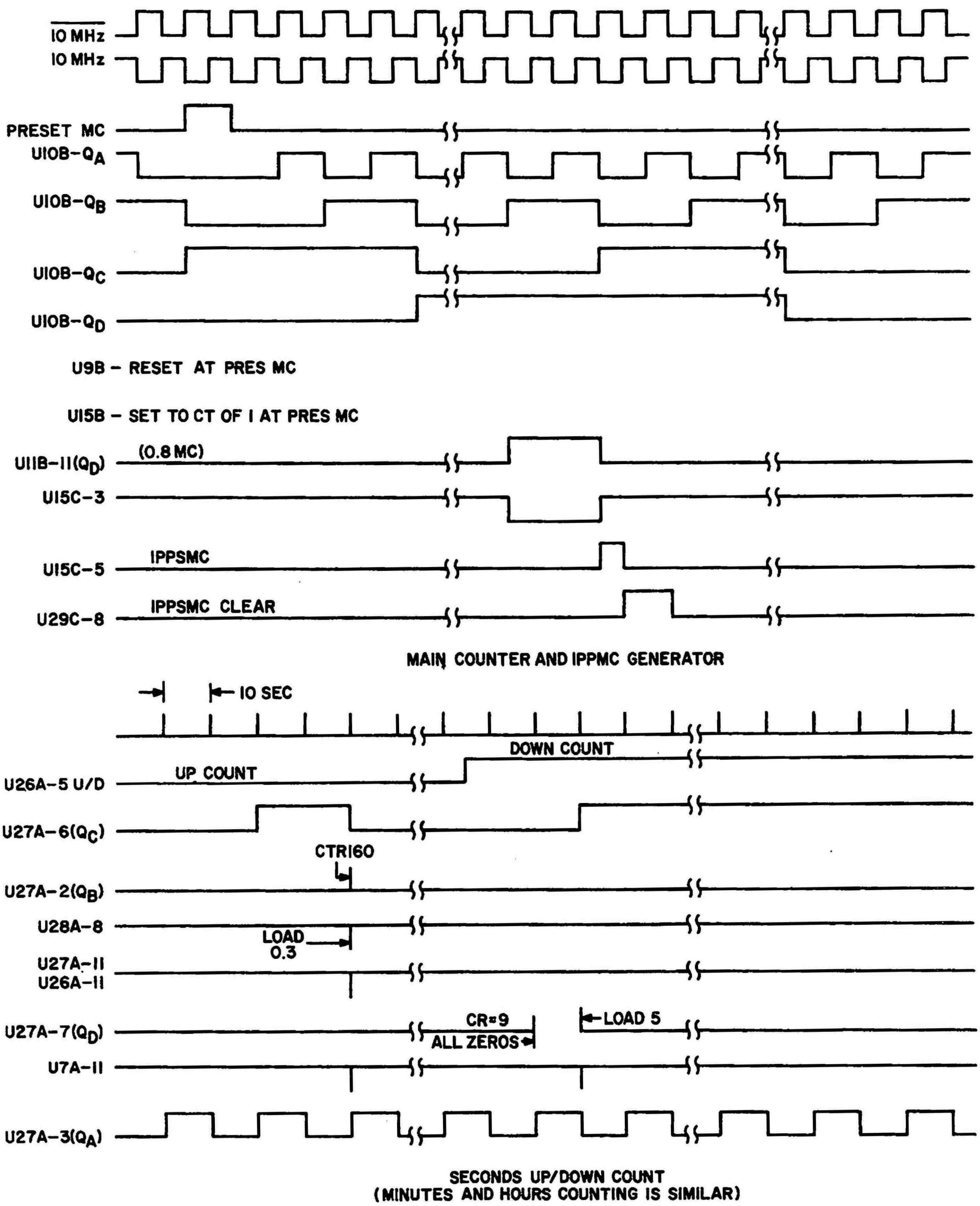

Figure 5-1. Real Time-of-Day Clock Module A9, Timing Diagram
(Sheet 3 of 5)

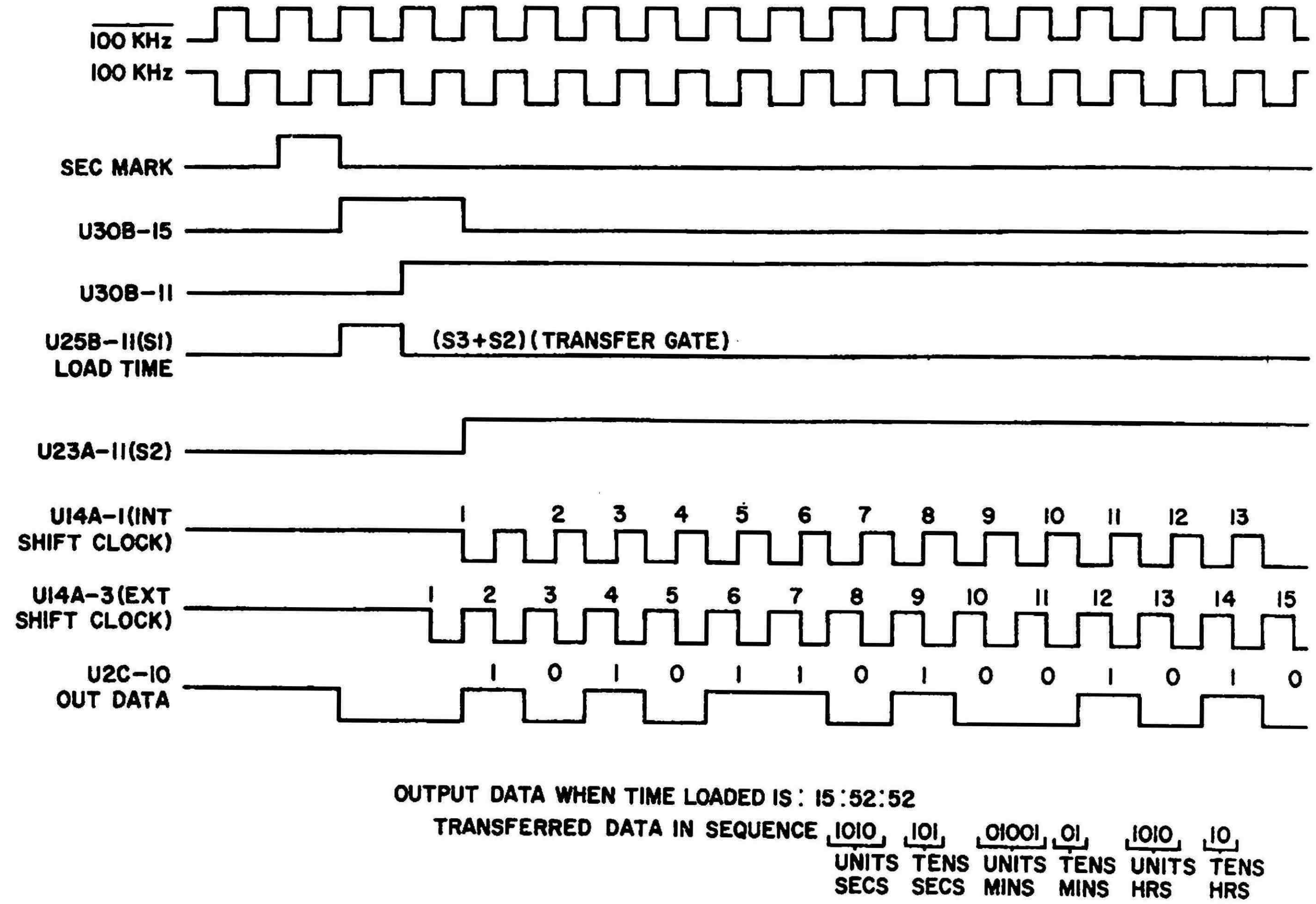

OUTPUT TRANSFERRED DATA, GATE AND CLOCK

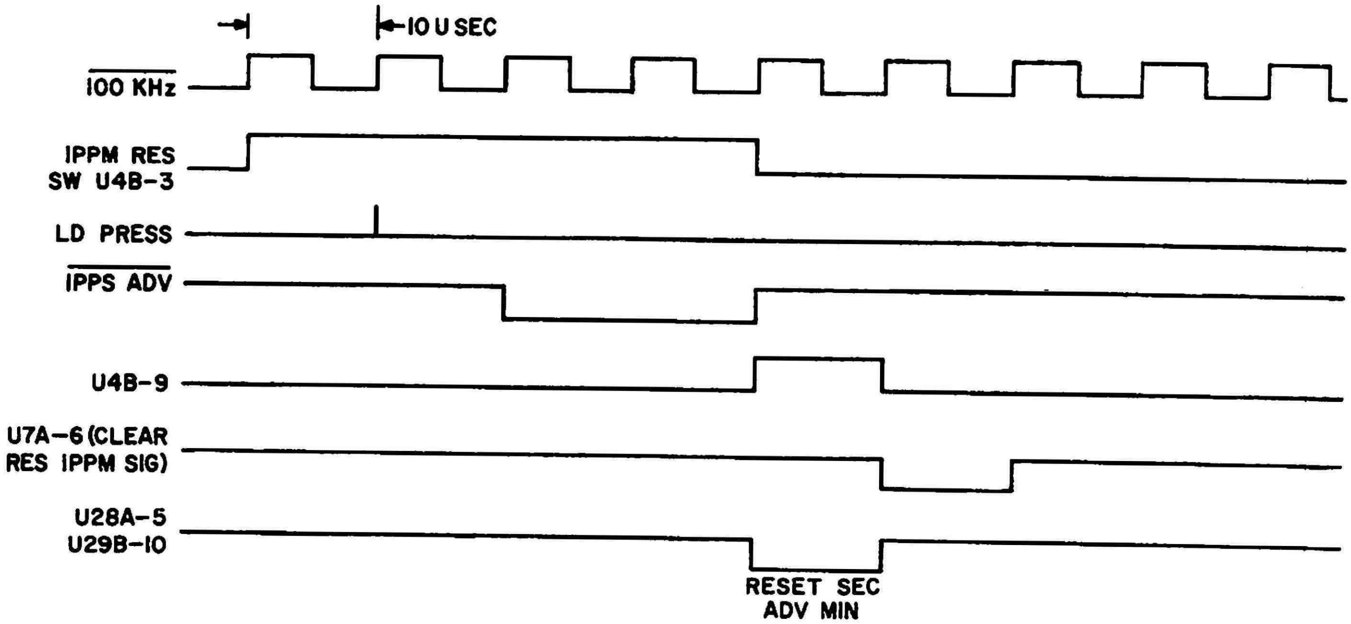

1PPM RESET OPERATION
(OPERATION CLEARS SEC AND ADVANCES MIN)

Figure 5-1. Real Time-of-Day Clock Module A9, Timing Diagram
(Sheet 4 of 5)

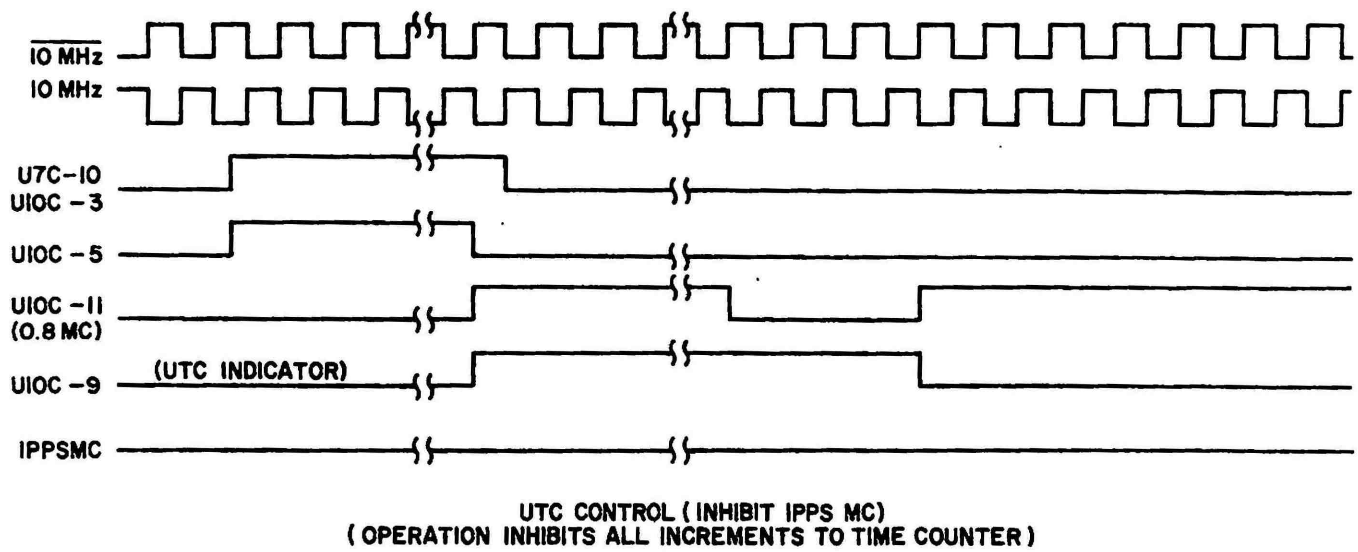

Figure 5-1. Real Time-of-Day Clock Module A9, Timing Diagram (Sheet 5 of 5)

(8) Real-time data circuits and output circuits. Real-time data inputs are received from the seconds, minutes, and hours counter and are fed into an output shift register, which feeds the data via drivers to the rear panel connectors. The real-time data signature is controlled by the 100 kHz real-time transfer pulse-train (transmit control circuits), which assures that the real-time data output is in the proper sequence. The real-time data are a binary coded decimal word framed by a real-time data transfer gate.

(9) 1 PPM output. The 1 PPM outputs are obtained via the 1 PPS and 1 PPM drivers (A9) Q1 and U9C. The 1 PPM input signal to the driver is obtained from the seconds, minutes, hours counter as a 1PPM pulse. Inversion and impedance matching are accomplished within the driver circuits.

(10) 1 PPS output. The 1 PPS outputs are obtained via the 1 PPS and 1 PPM drivers. The 1 PPS input signal to the driver is obtained from the preset advance counter as a 1PPS ADV pulse. Inversion and impedance matching are accomplished within the driver circuits.

(11) Clock display. The clock display A1 provides an illuminated direct numerical front panel readout of the time in seconds, minutes and hours. The display is tens and units, such as 23, 11, 01, etc.

(a) The clock display is controlled by the seconds, minutes, hours counter output, which is in binary coded decimal form. Display drivers convert the BCD input to a numerical readout.

(b) If the MRC is operating from internal battery power, the clock display is inhibited to conserve energy. When this condition exists, a front panel pushbutton switch is used to command the clock display on.

(12) Panel interface. The manual clock control circuits governing operation of the real time-of-day clock are found in the panel interface. These controls consist of the 1 PPM RESET switch; the UT SET switch and indicator; the SYNC ARM switch indicator; the HOURS/MINUTES/SECONDS switches and indicators; the CLOCK OPER/TIME HOLD switch; and the ADD and SUB switches. The functions of these controls are listed in table 4-1.

b. 1 MHz, 3 MHz Generator Module A10. The 1 MHz, 3 MHz generator module A10 provides a 1 MHz sinusoidal output and a 3 MHz square wave output derived from the 5 MHz square wave output of synthesizer module A7. A functional block diagram of 1 MHz, 3 MHz generator module A10 is shown in figure 8-5.

(1) Input. The 5 MHz output of synthesizer module A7 provides the drive signal for 1 MHz, 3 MHz generator module A10.

(2) Outputs. The outputs of 1MHz, 3MHz generator module A10 are available on front and rear panels. The 1 MHz sinusoidal output is available at A0J9 on the front panel while the 3 MHz square wave is available at connector P2 on the rear panel.

(3) X2 multiplier. The 5 MHz square wave inputted through A4J1 is multiplied by the X2 multiplier (A10) U1, U2 circuit to create a 10 MHz signal. The 5 MHz square wave signal is also routed to mixer circuit A10U2D.

(4) ÷10 circuit. The 10 MHz square wave output from the X2 multiplier circuit is divided by ÷10 circuit A10U3 to provide a 1 MHz square wave output to the mixer circuit and to the 1 MHz amplifier chain (A10) Q1-Q3.

(5) 1 MHz amplifier chain. The 1 MHz output of the ÷10 circuit is coupled to the front panel connector A0J9 via waveshaping amplifiers of 1 MHz amplifier chain (A10) Q1-Q3, which provide a filtered sine wave output at a level of 1 to 1.5 V rms.

(6) Mixer. The 1 MHz square wave output from the ÷10 circuit and the 5 MHz square wave output from the X2 multiplier are combined in mixer A10U2D. The 6 MHz square wave sum signal is the mixer output.

(7) 6 MHz Amplifier. The 6 MHz amplifier (A10) Q4, Q5 provides gain and is a buffer between the mixer circuit and ÷2 circuit A10U4.

(8) <u>÷2 circuit.</u> The 6 MHz square wave output from 6 MHz amplifier (A10) Q4, Q5 is divided by ÷2 circuit A10U4 to produce a 3 MHz square wave output, which is inputted to driver A10U5.

(9) <u>Driver.</u> The 3 MHz square wave output of ÷2 circuit A10U4 is coupled to the rear panel 3 MHz outputs of connector P2 via driver A10U5 which provides impedance matching and isolation. The 3 MHz square wave output level can be monitored by 3 MHz level meter A25 at this point.

5-7. LOW VOLTAGE POWER SUPPLY SUBSYSTEM. The discussion covering the low voltage power supply subsystem begins with an overall description tied in to a simplified block diagram shown in figure 8-6 that provides an overview of power generation and distribution within the MRC. The block diagram of figure 8-6 then serves as a key to the considerably expanded low voltage power supply subsystem functional block diagram of figure 8-7. The detailed analysis of the functional block diagram concludes the discussion of the low voltage power supply subsystem.

a. <u>Overall Description.</u> The power required to operate the MRC is provided by the low voltage power supply subsystem shown in the block diagram of figure 8-6. External operating voltages of 115/230 V ac and/or 26 ± 4 V dc enter the low voltage power supply subsystem through power supply regulator assembly A11, and part of main assembly A0. (An integral +28 V dc battery power supply A17 is also included in the MRC.) Automatic switching enables system operation on either external input, or on the internal battery supply contingent upon availability, with external ac ranking first priority, external dc ranking second priority, and internal battery ranking third priority. This enables the MRC to operate without interruption should the ac power input or the ac and dc power input both fail.

(1) Both external dc power at 26 ± 4 volts and/or internal dc power at greater than 21 volts, derived from rectified external ac power, are supplied to battery charger assembly A14A1. The rectified ac power can supply current to charge and maintain the charge of the internal battery power supply A17. External dc power can supply current to maintain the charge of the A17 cells. Automatic switching contained within battery crossover assembly A14A2 enables system operation on internal battery power contingent upon failure of both external ac and external dc line power. This enables the MRC to operate without interruption should both ac and dc line power fail. Operating power status and battery mode status are continuously monitored and announced by front panel LED indicators.

(2) The resulting dc voltage derived from any of the possible functional modes is applied to +18 V dc switching regulator module A12 to establish the +18 V dc operating supply voltage for modules A3, A4, A5, A7, A8, A13, A14, A24, and A25. The +18 V dc switching regulator A12 is operated in synchronism with dc/dc converter A13.

(3) The +18 V dc output of module A12 is monitored via the CIRCUIT CHECK meter on the MRC front panel.

(4) Power at +18 V dc distributed to the MRC circuits is via storage switch A0S5 and warmup relay A0K1.

(5) When open, storage switch A0S5 allows the VAC-ION pump to be operated independently of the remaining circuits of the MRC in order to maintain the high vacuum required in Cesium beam resonator assembly A1.

(6) Warmup relay A0K1 inhibits MRC operation if oscillator oven temperature is subnormal by interrupting the +18 V dc supply voltage line.

(7) Power at +18 V dc will be available for the MRC circuits if and only if storage switch A0S5 is closed (the MRC is not in special high temperature storage), and the contacts of warmup relay A0K1 are closed (oscillator oven temperature is within operation specifications).

(8) The voltages required to operate the Cesium beam resonator circuitry are generated by six modules identified as the Cesium beam power supplies. They include facilities for generating voltages to operate the Cesium oven, the hot wire detector, the C-field magnet, the electron multiplier, and the VAC-ION pump, from an input from switching regulator A12.

(a) To avoid damage it is critically important to maintain a high vacuum within the Cesium resonator at all times, but especially so when the resonator is operating. Maintaining this vacuum is the purpose of the VAC-ION pump.

(b) To ascertain the resonator will not operate without vacuum pumping, an interlock system has been incorporated to disable the source voltage to the other five Cesium beam power supplies in the event of pump failure.

(c) This interlock operates by sensing the high voltage ionizing potential generated by the VAC-ION supply and enabling relay A24K1 in the source voltage line if and only if the ionizing potential is above the specified level (+3000 V dc).

(9) The +18 V dc regulated output from +18 V dc switching regulator A12 is distributed to subordinate regulator circuits contained within their respective modules and to dc/dc converter A13.

(10) Supply voltages ranging from -18 to +40 V dc are derived within the dc/dc converter to power circuits requiring these operating levels.

(11) Power at +18 V dc coming directly from +18 V dc switching regulator A12 is distributed to the Cesium beam power supplies and to the X630 multiplier A5 series regulator.

(12) Power at +18 V dc from +18 V dc switching regulator A12 is also routed to the 1 MHz, 3 MHz generator module A10 series regulator, primary loop module A3, synthesizer module A7, and meter driver

amplifier A25 in addition to voltages from dc/dc converter A13. The 1 MHz, 3 MHz generator module A10 series regulator receives +5 V dc from module A13, primary loop module A3 receives -18 V dc from module A13, and synthesizer module A7 and meter driver amplifier A25 both receive +5 and -18 V dc from module A13.

(13) Those circuits which receive power from module A13 alone include +5 V dc switching regulator module A16 which receives +18 volts (used to power module A9), real time-of-day clock A9 which receives ±12 volts, the alarms logic module A26 which receives +5 and -18 volts, and the control portion of battery crossover assembly A14A2 which receives +5 and +40 V dc.

(14) A detailed description of each function of the low voltage power supply subsystem with reference to the functional block diagram of figure 8-7 is presented in the paragraphs which follow.

b. Power Supply A0. The power supply portion of A0 contains the facilities for handling 115/230 V ac and +22 to +30 V dc power inputs. Selection of either ac input voltage is accomplished by jumpering primary windings of the power transformer. Jumpering pin 5 to pin 6 enables 230 V ac operation, while jumpering pins 4 to 5, and 6 to 7 enables 115 V ac operation. Direct current connections are via pins 11 (+) and 12 (-).

(1) Line fusing and filtering. Overcurrent protection for the primary windings of power transformer A0T1 is accomplished by fuses A0F1 and A0F2, which limit continuous primary current to 2 amperes. Protection from radio frequency interference is by filters A0FL1 and A0FL2, which isolate power transformer A0T1 from external rf inputs and suppress high voltage transients.

(2) Power transformer. Power transformer A0T1 provides stepped down ac voltages for rectification in the two following power supply rectifier circuits (A11CR1 and A11CR2, A0CR12,13,14,15).

(3) Full-wave rectifier and LC filter. Diodes A0CR12, A0CR13, A0CR14, and A0CR15 are a full-wave rectifier bridge which provides pulsating dc from the ac input from A0T1. This pulsating dc is filtered by the standard pi filter of A0L1, A0C1, and A0C2.

(4) A11Q1 diode resistance network. The diode resistance network contained within this circuit (part of A11) provides, via a second full-wave rectifier and transistor switch, both automatic switching from external ac to external dc operation, and an indication of which mode of operation the MRC is utilizing at all times (except during battery operation).

(5) DC fusing and filtering. Protection from overcurrent in the external dc operation circuits is provided by fuse A0F3 which limits external dc input current to 4 amperes. This current is filtered by filter A0L2 and the circuit is protected from switching transients by diode A0CR17.

c. +18 V dc Switching Regulator A12. Module A12 provides basic dc operating current for the entire MRC system. Inputs are accepted from the A11 module, including both external dc power and rectified, filtered external ac power, and from battery charger and crossover module A14 when the MRC is operating on battery pack power.

(1) Fuse. DC input current to switching regulator A12 is limited to 3 amperes by fuse A12F1.

(2) Control regulator. Regulation of dc voltage is achieved by control regulator A12U1 which is a dc coupled series pass element.

(3) Feedback loop. Control of series pass elements contained within control regulator A12U1 is through frequency compensated operational amplifier A12U2 and drivers A12Q2 and A12Q6. Input to operational amplifier A12U1 is via current sensing transistors A12Q3 and A12Q4. These elements complete the feedback circuit required to operate series control regulator A12U1.

(4) Zener diode clamping. DC output of switching regulator A12 is clamped to a maximum of +22 V dc to protect the MRC system in the event of overvoltage malfunction. Zener diode A12CR6 across the output of A12 will shunt to ground all excess current resulting from an overvoltage condition.

(5) Transistor switch. To assure maximum sensitivity to power demand variations, and consequently most accurate possible regulation of output voltage, the A12 regulator is synchronized to dc/dc converter A13. When the chopper multivibrator in A13 is in one of its maximum conduction states, transistor A12Q5 is keyed on, which, in turn, keys on operational amplifier A12U2. This assures best regulation will occur simultaneously with maximum current demand.

d. Storage Switch. With most operation of the MRC, storage switch A0S5 is always closed. If however the MRC is to be stored for a long period of time or at unusually high temperatures, storage switch A0S5 will be opened. This removes dc power connection from all MRC circuitry except the Cesium beam power supplies. This function provides a means to operate the electronic vacuum pump (VAC-ION pump) located within the Cesium beam resonator assembly independently of the MRC system to maintain the high vacuum required in the Cesium reservoir.

e. Warmup Relay. Sensing the oven temperature of the secondary OCVCXO 5 MHz oscillator is warmup relay A0K1. When initial power is applied to the MRC, relay A0K1 opens the +18 V dc output circuit from switching regulator A12 to the remainder of the MRC. When correct operating temperature is achieved relay A0K1 enables the remainder of the MRC by closing the +18 V dc circuit.

f. DC/DC Converter A13. Various operating voltages required by MRC circuits and subordinate regulator modules are suppled from the basic +18 V dc supply output by dc/dc converter A13. Via electronic switching and regulation, output voltages of ±18, ±12, +5, and +40 volts are generated.

(1) DC chopper circuit. The +18 V dc output of A12 is inputted to dc/dc converter A13 via a dc chopper. This is a free-running multivibrator operating at 20 to 25 kHz. The primary of power transformer A13T1 and transistor A13Q8 provide feedback triggering of multivibrator A13Q1-Q2. Alternate conduction and nonconduction of transistors A13Q1 and A13Q2 allow current pulses to flow in the primary windings of A13T1 which inductively are coupled to the secondary winding, in an action similar to the more usual ac powered power transformer.

(2) Transformer. The chopped dc input to transformer A13T1 from multivibrator A13Q1-Q2 is transformed to 5,21,18, and 40 volts nominal ac at the multivibrator frequency rate by transformer A13T1. These voltages supply the rectifiers and regulators in A13 to produce the six dc output voltages.

(3) ±12 volt supply. Rectifiers A13CR1, A13CR2, A13CR3, and A13CR4 provide full-wave rectification of the 18 volt nominal ac output of A13T1 to power transistors A13Q3, A13Q4, A13Q5, and A13Q6. These four series pass transistors are controlled by two emitter coupled zener diodes A13CR13 and A13CR14 to provide a balanced ±12 volt dc regulated output.

(4) +18 volt supply. The dc output from A13CR1-4 is tapped before regulators A13Q3-Q6 to provide an unregulated +18 V dc output.

(5) -18 volt supply. Full-wave rectifiers A13CR5 and A13CR6 produce 21 volts nominal ac to power transistor A13Q7 to provide an 18 volt regulated output. Zener diode A13CR15 and operational amplifier A13U1 are the control elements for A13Q7.

(6) +5 volt supply. Full-wave rectifiers A13CR7 and A13CR8 operate regulator A13U2 to provide a +5 V dc regulated output.

(7) +40 volt supply. Bridge rectifiers A13CR9,10,11, and 12 and capacitor filter A13C19 provide an unregulated +40 V dc output.

(8) Sync. The synchronizing signal to switching regulator A12 is provided by dc/dc converter multivibrator transistor A13Q1 collector circuit via a voltage divider.

g. OCVCXO Modules A4 and A8. Power to the two sealed crystal controlled oscillators is from switching regulator A12. Additional regulation or other processing of the dc input is integral to these modules. Warmup relay A0K1 is triggered by an output from OCVCXO module A8.

h. Internal Battery System. Battery charger and crossover module A14 and battery pack A17 comprise the internal battery system. This circuitry provides four distinct means of charging the battery pack, a means for switching the MRC over to battery operation, and battery protection.

(1) Battery pack A17. The MRC internal battery consists of 24 rechargable C cells in series. Overcurrent protection is provided by fuse A0F4, located outside the battery module. Overtemperature protection is provided by thermal switch A17S2, located within the battery module. Storage switch A17S1 is provided to isolate the battery pack for storage or should the operator wish to disable the batteries. Nominal battery voltage is + 28 V dc.

(2) Battery charger A14A1. The battery charge circuit controls all of the four means of charging the battery pack: high charge, trickle charge, automatic charge, and external trickle charge.

(a) External trickle charge. When it is desired to charge the battery pack externally, the external trickle charge circuit is used. Transistors A14A1Q8,Q9, and A14A1Q10 regulate the current flow from an external charging input. This external charging current is added to the normal internal charge circuit at the input of series pass regulator A14A1Q1.

(b) Series pass regulator. All charging currents, external and internal, are passed through transistor series pass regulator A14A1Q1 which limits the current magnitude by changing its series resistance in accordance with its control circuits.

(c) Internal charging. All internal charge energy enters the battery charging circuit via series pass transistor A14A1Q1. Each mode of internal charging is enabled by control circuits which drive the transistor.

(3) Charge sensing and control. The automatic charge circuit is composed of automatic voltage sense amplifier A14A1U4 and its related sensing elements. The manual high and low charge circuits are composed of resistive and zener diode sensing elements selected by operating front panel switches. In each case the amount of charging current and its characteristics are a function of the balance obtained between the two inputs of voltage comparator A14A1U1. One input of A14A1U1 is the output of current sensing amplifier A14A1U2 and the other is the reference voltage selected by the selection of a particular charging mode. The output of comparator A14A1U1 drives series pass transistor A14A1Q1 through driver A14A1Q5, determining the charge current.

(4) Battery crossover A14A2. The A14A2 circuitry is the sensing mechanism by which +18 V dc system B+ power is maintained through switching regulator A12 and hence the remainder of the MRC if external ac and dc prime power fails. The sequence of logic for this is, when ac power is present, either external dc or battery power will not be used. Secondly, in the event of ac power loss, if external dc power is available to the system, the external dc power takes preference over the battery power. The logic also is such, that when ac power is resumed, it will supply power as a prime source. In the event both ac and external dc power are not available, the battery power will be capable of powering the system for 1 hour.

(a) External power present. With the presence of dc power from A0, power supply, and/or external dc power through power supply A11, the ac and external dc power monitoring circuit, consisting of A14A2U4, CR5, CR6, and associated circuitry, is normally cut off. This prevents A14A2Q3 and A14A2Q6 from turning on, which prevents relay A14A2K1 from energizing. This effectively prevents battery power from entering the system.

(b) External power, fails. The other situation which can exist is the absence of both ac and external dc power. As can be seen from the block diagram (figure 8-7) both +44 V dc (from ac power source) and external dc power are monitored by A14A2U4. The operation involved in supplying battery power to the system is as follows:

1. When both ac and dc power are absent at the input of monitor circuit A14A2U4, A14A2U4 turns on. This, in turn, turns on A14A2Q3 and A14A2Q6 to energize relay A14A2K1, which supplies battery power through series transistor A14A2Q5 back through the +44 V dc input supply line to A14A2U4, as well as supplying the rest of the system with battery power.

2. In addition, to protect battery cells from discharging to a minimum voltage level, when battery voltage drops to approximately +26 V dc, amplifier A14A2U3 and transistor A14A2Q2 bias A14A2Q3 to off, shutting off the battery supply by disabling relay A14A2K1.

3. Front panel LED indicators monitor and announce the presence of battery voltage and that the battery is being used to power the system.

i. +5 V dc Switching Regulator A16. Switching regulator module A16 provides +5 V dc for the display circuitry on real time-of-day clock A9. The +18 V dc is inputted from dc/dc converter A13. Regulation is provided by switching regulator circuit A16U1, A16Q1, and A16U2.

(1) Control. Control amplifier A16U2 is synchronized by a sync input from the control multivibrator in dc/dc converter A13.

(2) Filter. Filtering of the regulated dc output is accomplished by capacitor A16C6.

j. Subordinate DC Circuits. Each module within the MRC consumes power from the dc power supply. Several contain integral regulators to provide precise control over voltage levels within the module. Those circuits are discussed by module in the following subparagraphs.

(1) Real time-of-day clock A9. The ±12 V dc from dc/dc converter A13 is used to drive the waveshaping circuits within A9. The +5 V dc from switching regulator module A16 is filtered within A9 and utilized to illuminate the digital real-time data readout on the MRC front panel.

(2) Meter driver A25. The facility for measuring battery voltage, charge current, and dc supply voltage from A12 (+18 V dc) and A13 (-18 V dc and +5 V dc) is included in the A25 module. Power to operate the meter driver amplifier is derived from the module A12 supply.

(3) Logic alarms A26. The +5 V and -18 V dc power to operate logic alarms module A26 is obtained directly from the +5 and -18 volt outputs of dc/dc converter A13.

(4) 1 MHz, 3 MHz generator module A10. Two series regulators are contained within the A10 module: a +15 V regulator A10U6 deriving power from A12 switching regulator (+18 V dc), and a +5 V regulator A10Q1 deriving +5 volt power from dc/dc converter A13.

(5) X630 multiplier module A5. The X630 multiplier circuits are powered by a series regulator U1 providing +15 V dc derived from the +18 V dc output of switching regulator A12.

(6) Primary loop module A3. Three regulators are contained within and operate primary loop module A3. A +15 volt regulator A3U2 obtains power directly from switching regulator A12. A -15 volt regulator A3U16 and a +5 volt regulator A3U1 obtain power from dc/dc converter A13.

(7) Synthesizer module A7. Two regulators are contained within and operate synthesizer module A7. A +15 volt regulator A7U4-Q1 obtains power from switching regulator A12. A -15 volt regulator A7U3 obtains power from dc/dc converter A13. Converter A13 also supplies +3 volts directly to operate some A7 circuitry.

k. VAC-ION Regulator and Cesium Beam Interlock Circuit. Beam tube C-field supply A1A3, hot wire supply A19, Cesium oven control A1A4, and electron multiplier supplies A21 and A23 all operate on +18 V dc power from switching regulator A12 via interlock relay A24K1. When relay A24K1 is enabled, +18 V dc power is inputted to those supplies and they operate. Relay A24K1 is enabled only when driven by relay driver U20-U21 which senses the presence of +2000 volts dc at voltage divider A24R23-A24R24. As voltage divider A24R23-A24R24 is connected to the output of the VAC-ION pump power supply, high voltage will exist at the R23-R24 junction only when high voltage (+3000 V dc) is present at the VAC-ION pump. Consequently relay A24K1 will be enabled only when the VAC-ION pump is operating and the Cesium beam resonator will be protected from operation without vacuum pumping.

CHAPTER 6

MAINTENANCE

6-1. INTRODUCTION. This chapter consists of two sections covering maintenance data. Section I deals with intermediate maintenance and features a performance test table and fault isolation information. Section II provides special maintenance instructions for maintenance personnel involved in module repair and alignments. Since assembly/disassembly of replaceable components is obvious, no instructions are provided. Preventive maintenance is covered at the end of Section II.

Section I. INTERMEDIATE MAINTENANCE

6-2. SCOPE. This section provides data required for intermediate maintenance of the MRC. The minimum performance test provides a system level check of the unit's operation. If any step of the minimum performance test fails, the fault isolation index is used. For any step that has failed, the failure is most likely among the associated components listed in the index. If a module is suspected to be faulty, it may be checked by a module performance test table (see MODULE PERFORMANCE paragraph). If all suspected components pass all performance standards, wiring may be checked using the MRC running list found in chapter 8.

6-3. MAINTENANCE SUPPORT EQUIPMENT. Maintenance support equipment required for performance testing is compiled in table 6-1. In addition to the equipment and an AC power source, a +28 VDC power source is required.

Table 6-1. Maintenance Support Equipment

Equipment Identification	Characteristics
Oscilloscope, Tektronix Model 454 (or equivalent)	Observe waveform/pulse characteristics.
RF voltmeter, Boonton Model 91 CA (or equivalent)	Sinusoidal output testing for rf signal level measurements.
Signal source, Hewlett Packard Model 651B (or equivalent)	Sinusoidal output testing for isolation, harmonic distortion, non-harmonic distortion.
	Timing pulse and dc outputs testing for isolation.

Table 6-1. Maintenance Support Equipment-Continued

Equipment Identification	Characteristics
Square wave generator, Hewlett Packard Model 209A (or equivalent)	Timing pulse and dc output testing for pulse advance and synchronization.
Phase comparator, Frequency Electronics Model FE-40 ( )	Accuracy and frequency comparison.
Reference Cs beam tube standard, Frequency Electronics Model 3702	Accuracy.
Spectrum analyzer, Hewlett Packard Model 141S/8552B/8553B (or equivalent)	Sinusoidal output testing for harmonic distortion, non-harmonic distortion.
Frequency Counter, HP Model 5345A (or equivalent)	Measure high frequencies.
Pulse generator, Data Dynamics Model S109 (or equivalent)	Clock indication/1PPM testing for auto sync.
Multimeter, Simpson Model 260 (or equivalent)	Voltage and resistance measurements.
High impedance probe, Tektronix Model 010-128 (or equivalent)	Match circuit under test to oscilloscope input.
Power Meter HP 432A with 478A Mount (or equivalent)	Measure multiplier power level.

6-4. MINIMUM PERFORMANCE. Table 6-2 is the minimum performance test procedure for the MRC. It provides a complete system level check of the unit. This test is to be run when a unit is received at the intermediate level from the field. It is also to be performed after a unit is repaired.

Table 6-2. MRC Minimum Performance Test

Preliminary Instruction:

Set unit on test bench.

Note: AC power is 115V (or 230V) 47 to 460 Hz, and DC power is +28 VDC.

Step	Operation of Test Equipment	Point of Test	Operation of Equipment	Performance Standard
1		Front Panel	Using cable 636A638G01, connect Pl to AC power source. Set BAT CHG switch to AUTO. Allow a 20 minute warm up period.	POWER SOURCE IN USE AC is lighted.
2		Front Panel	Using cable 636A638G02, connect Pl to DC power source. Disconnect AC power.	POWER SOURCE IN USE DC, POWER SOURCE AVAILABLE DC, AND POWER SOURCE AVAILABLE BAT indicators are lighted.
3		Front Panel	Using cable 636A638G03, connect Pl to AC power source. Set PRIMARY LOOP LOOP and SECONDARY LOOP LOOP switches to OPEN.	PRIMARY LOOP ALARM and SECONDARY LOOP ALARM indicators are lighted.
4		Front Panel	Set PRIMARY LOOP LOOP and SECONDARY LOOP LOOP switches to OPR. Perform procedure listed in paragraph 3-2 steps f through l. With the	PRIMARY LOOP OPERATE and SECONDARY LOOP OPERATE indicators are lighted. Primary LOOP ALARM and SECONDARY

Table 6-2. MRC Minimum Performance Test-Continued

Step	Operation of Test Equipment	Point of Test	Operation of Equipment	Performance Standard
4 (Cont)			CIRCUIT CHECK switch in position 8, adjust DC OFFSET Control for an indication of 0 ±5 on the CIRCUIT CHECK METER.	LOOP ALARM indicators are not lighted.
5		CIRCUIT CHECK Meter, M1	Set CIRCUIT CHECK switch to the following positions:	
			a. 1	+40 to +80
			b. 2	+40 to +80
			c. 3	During high charge, +40 to +80. During trickle charge, 0 to +20.
			d. 4	+40 to +80
			e. 5	+40 to +80
			f. 6	+40 to +80
			g. 7	0 to +20
			h. 8	-5 to +5 (Set in Step 4).
			i. 9	0 ±40
			j. 10	0 ±40
			k. 11	0 to +20
			l. 12	+40 to +80
6	Connect a 75 ohm load to point of test. Connect oscilloscope across 75 ohm load (use tee connector).	P2-1 or P2-3		3 MHz output at each point is a square wave 5 ±2.5v p-p, rise time ≤ 40 nsec.

Table 6-2. MRC Minimum Performance Test-Continued

Step	Operation of Test Equipment	Point of Test	Operation of Equipment	Performance Standard
7	Remove 75 ohm load.	Front Panel	Disconnect P1 from AC and DC sources.	PRIMARY LOOP OPERATE and SECONDARY LOOP OPERATE indicators remain lighted. POWER SOURCE IN USE BAT is lighted.
			Using cable 636A638G01, connect P1 to AC source.	
8	Connect a 50 ohm load to point of test. Connect oscilloscope across 50 ohm load (use tee connector).	1PPS OUTPUT jack		A positive pulse, amplitude: 10 ±1.0v, pulse width: 20 + 10, -4 usec, rise time ≤ 50 nsec, fall time ≤ 1.0 usec.
9	Same as step 8 for each point of test.	1PPM OUTPUT jack, P2-9 (P2-12 RTN), P2-17 (P2-20 RTN)		A positive pulse, amplitude 4 ±1.0v, pulse width 10 ±1.0 usec, rise time ≤1.0 usec, fall time ≤0.9 usec.
10		TIME DISPLAY	Set CLOCK OPER/TIME HOLD switch to TIME HOLD.	TIME DISPLAY stops running.
11		TIME DISPLAY	Simultaneously press SECONDS switch and ADD switch.	SECONDS portion of display advances.

Table 6-2. MRC Minimum Performance Test-Continued

Step	Operation of Test Equipment	Point of Test	Operation of Equipment	Performance Standard
12		TIME DISPLAY	Simultaneously press SECONDS switch and SUB switch.	SECONDS portion of display retards.
13		TIME DISPLAY	Simultaneously press MINUTES switch and ADD switch.	MINUTES portion of display advances.
14		TIME DISPLAY	Simultaneously press MINUTES switch to SUB switch.	MINUTES portion of display re- tards.
15		TIME DISPLAY	Simultaneously press HOURS switch and ADD switch.	HOURS portion of display advances.
16		TIME DISPLAY	Simultaneously press HOURS switch and SUB switch.	HOURS portion of displays retards.
17		TIME DISPLAY	Set CLOCK OPER/TIME HOLD switch to CLOCK OPER.	TIME DISPLAY starts running.
18	Connect oscil- loscope to each point of test. Use load 636A629G01.	P2-8 (P2-12 RTN) P2-16 (P2-20 RTN)		SECOND MARK output at each point is +6 ±1.0V high and -6 ±1.0V low. Pulse width is 10 ±1.0 usec. Slew rate magnitude is +4.0V to +30.V/usec (0.4 to 3.0 usec rise time).

Table 6-2. MRC Minimum Performance Test-Continued

Step	Operation of Test Equipment	Point of Test	Operation of Equipment	Performance Standard
19	Same as Step 18. Trigger horizontal sweep to MRC 1PPS.	P2-5 (P2-12 RTN) P2-13 (P2-20 RTN)		Time of day at each point is 20 bit word of 6 BCD digits occurring once per second. Bit duration is 10 ±1.0 usec beginning 10 ±2.0 usec after trailing edge of second mark. Logic 1 is +6 ±1 vDC, logic 0 is -6 ±1 vDC. Slew rate magnitude is 4.0v to 30.0v/usec (0.4 to 3.0 usec rise time).
20	Same as step 18.	P2-6 (P2-12 RTN) P2-14 (P2-20 RTN)		Real time data transfer clock at each point is 20 pulse 100 kHz square wave. Leading edges coincident with centers of real time data bits. Logic levels and slew rate magnitude same as Step 19.

Table 6-2. MRC Minimum Performance Test-Continued

Step	Operation of Test Equipment	Point of Test	Operation of Equipment	Performance Standard
21	Same as step 18.	P2-7 (P2-12 RTN) P2-15 (P2-20 RTN)		Real time transfer gate at each point is positive pulse 200 ±4 usec once per second, bracketing real time data transfer clock. Logic levels and slew rate magnitude same as step 19.
22		TIME DISPLAY	Press 1 PPM RESET switch.	Observe that hours, minutes, and seconds are displayed and TIME DISPLAY advances to next minute and 00 seconds.
23	Connect 1 pps output of a cesium beam standard to both unit SYNC IN jack and oscilloscope, A trace. Connect point of test to oscilloscope B trace.	Output 1PPS jack on Front Panel, P2-8 (P2-12 Return), and P2-16 (P2-20 Return).	Set PULSE ADVANCE MICROSEC thumbwheel switches to 000000.0. Depress SYNC ARM switch.	SYNC ARM indicator is lighted. When second mark occurs, SYNC ARM indicator goes out. Second mark is in sync with reference ±1 usec. TIME DISPLAY advances to next minute and 00 seconds.

Table 6-2. MRC Minimum Performance Test-Continued

Step	Operation of Test Equipment	Point of Test	Operation of Equipment	Performance Standard
	NOTE CONNECT HIGH-GOING INPUT TO FEMALE PIN OF SYNC IN JACK AND RETURN OF INPUT TO MALE PIN.			
24	Same as step 23.	P2-8 (P2-12 Return)	Set PULSE ADVANCE MICROSEC thumbwheel switches to following positions:	
			a. 000000.1 through 000000.9	Second mark advances 0.1 usec through 0.9 usec.
			b. 000001.0 through 000009.0	Second mark advances 1 usec through 9 usec.
			c. 000010.0 through 000090.0	Second mark advances 10 usec through 90 usec.
			d. 000100.0 through 000900.0	Second mark advances 100 usec through 900 usec.
			e. 001000.0 through 009000.0	Second mark advances 1 msec through 9 msec.
			f. 010000.0 through 090000.0	Second mark advances 10 msec through 90 msec.

Table 6-2. MRC Minimum Performance Test-Continued

Step	Operation of Test Equipment	Point of Test	Operation of Equipment	Performance Standard
24 (Cont)			g. 100000.0 through 900000.0	Second mark advances 100 msec through 900 msec.
25	Connect oscilloscope to point of test. Set to measure 20 msec/cm and 2V/cm. Set sync to external.	P2-5 (P2-12 GND), P2-7 SYNC	Set time of 23 hrs, 59 min, and 00 sec into MRC. View 20-bit time of day on oscilloscope. Observe until time becomes 00 hrs, 00 min, and 00 sec.	20-bit word displayed is 1000111011001-XXXXXXX. The last seven bits change with the seconds. At time 00 hrs, 00 min, 00 sec 20-bit word is all zeros.
26	Connect the 1 MHz output of a cesium beam standard and the point of test to a phase comparator.	A0J9	Observe phase comparison for 2 hours minimum.	1 MHz frequency is accurate to within ±3 pp10^{11}.
27	Disconnect test equipment.		Disconnect P1 from AC power source.	

6-5. FAULT ISOLATION. When a step in the minimum performance test fails, the fault isolation index (table 6-3) is used to determine which module or group of modules contains the fault. The left column of the index lists the step numbers of table 6-2. The middle column lists the symptoms. The right column lists the components associated with the symptoms.

Table 6-3. Fault Isolation Index

Min. Perf. Step	Symptom	Associated Components
1	Indicator is not lighted after 20 minutes.	Rear fuses, A11
2	Indicators fail to light.	Rear fuses, A14
3	ALARM indicators fail to light.	A26
4	OPERATE indicators fail to light, or ALARM indicators fail to go out.	A26
5	Meter indication is incorrect:	
	Step 5a	A11, A12, A13, A16, A25
	b	A17
	c	A14
	d	A1
	e	A4
	f	A8
	g	A1, A19, A22, A24
	h	A4, A5, A21, A23
	i	A3, A4
	j	A7
	k	A7
	l	A10

Table 6-3. Fault Isolation Index-Continued

Min. Perf. Step	Symptom	Associated Components
6.	3 MHz signal missing or out of specification.	A10, A13
7.	Clock operation is not continued using battery.	A14, A17
8.-21.	Any pulse readings or display readings incorrect.	A9
22.-24.	Sync and pulse advance circuits not operating properly.	A9
25.	1 MHz signal missing or out of specification.	A7, A8, A10, A12, A13.

6-6. MODULE PERFORMANCE. Tables 6-4 through 6-23 are the performance test tables for the following modules: A3, A4, A5, A7 through A14, A16, A17, A19 and A21 through A26. The I's and O's in the PERFORMANCE STANDARD column signify which points of test are inputs and which are outputs. In the point of test column, if no return is listed, use chassis ground. The cesium beam resonator assembly A1 and the waveguide assembly A6 cannot be maintained at the intermediate level. These two assemblies can only be replaced at the depot level, and they must be tested and repaired at the factory. Except for modules A4, A8, A17, A21, and A22, there are parts location diagrams next to their respective module test tables. These diagrams (figure 6-1 through figure 6-20) are used during both performance tests and troubleshooting to locate components and standoffs.

Table 6-4. Primary Loop Module A3, Performance Test

Preliminary Instructions:

Set the internal battery (S1) switch to OFF.

Disconnect all external power from the MRC.

Remove A3 module from the MRC chassis. Connect cable 636A630G01 between the A3 module and the MRC chassis.

Set the internal battery (S1) switch to ON.

Apply external power to the MRC.

Note: All 20 minute warmup for the Cesium Beam Resonator signal level and Crystal Oscillator frequency to stabilize.

Step	Operation of Test Component	Point of Test	Control Settings and Operation of Equipment	Performance Standards	
1	Connect DVM to each point of test, in turn.	A3P1 - 1	Normal Operation, no Special Configuration Required.	+18V ±0.7V DC	I
		A3P1 - 4		-18V ±0.7V DC	I
		A3P1 - 7		+15V ±0.5V DC	O
		- 9		-15V ±0.5V DC	O
		- 10		0 ±2V DC	O
		- 13		+4V ±1V DC	O
		- 14		0V ±0.5V DC	O
		- A2		0 ±2V DC	O
2	Connect counter to each point of test, in turn.	- A3		833.333 Hz ±1 Hz	I
		- A4		83.3 Hz ±0.1 Hz	O

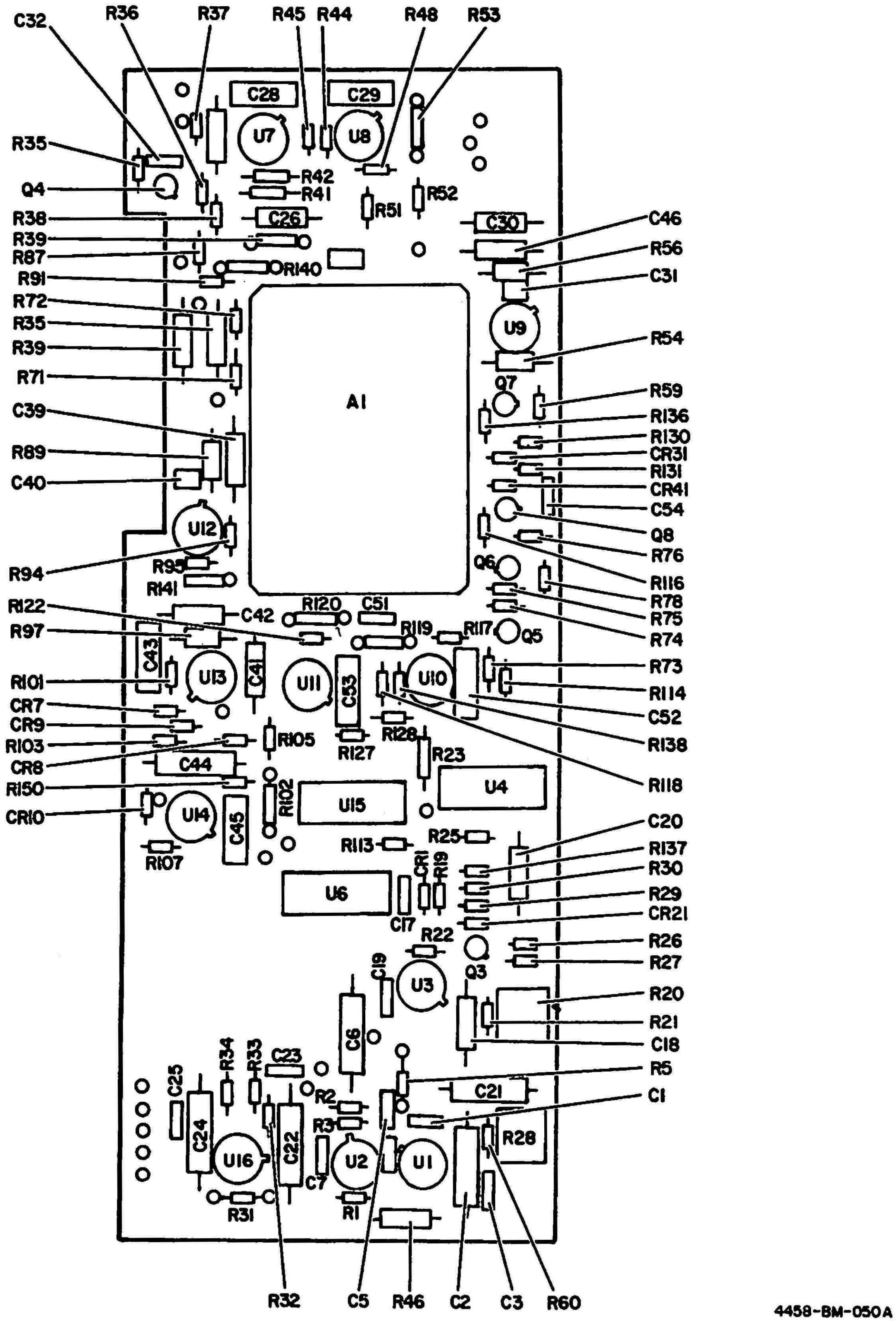

Figure 6-1. Primary Loop Board Assembly A3A1, Parts Location Diagram

Table 6-4. Primary Loop Module A3, Performance Test-Continued

Step	Operation of Test Component	Point of Test	Control Settings and Operation of Equipment	Performance Standards	
3	Connect oscilloscope to point of test.	- A4		1.5 to 2.0V P-P Square Wave	O
4	Disconnect all test equipment.				

Table 6-5. Primary OCVCXO Module A4, Performance Test

Preliminary Instructions:

Set the internal battery (S1) switch to OFF.

Disconnect all external power from the MRC.

Remove A4 module from the MRC chassis. Connect cable 636A636G01 between the A4 module and the MRC chassis.

Set the internal battery (S1) switch to ON.

Apply external power to the MRC.

Note: Allow 20 minute warmup for the Cesium Beam Resonator signal level and Crystal Oscillator frequency to stabilize.

Step	Operation of Test Component	Point of Test	Control Settings and Operation of Equipment	Performance Standards	
1	Connect DVM to the point of test.	A4P1-1	Normal operation, no special configuration required.	+18V ±0.7V DC	I
		A4P1-4		0V ±2V DC	I
2	Connect counter to each point of test in turn.	A4P1-A1		14.591479 MHz ±20 Hz	O

Table 6-5. Primary OCVCXO Module A4, Performance Test-Continued

Step	Operation of Test Component	Point of Test	Control Settings and Operation of Equipment	Performance Standards	
2 (Cont)		A4P1-A2		14.591479 MHz ±20 Hz	O
		A4P1-A3		83.333 Hz ±1 Hz	I
3	Connect RF voltmeter to each point of test, in turn.	A4P1-A1		0.16 to 0.31V RMS	O
		-A2		0.22 to 0.40V RMS	O
4	Disconnect all test equipment.				

Table 6-6. Multiplier Module, Times 630, A5, Performance Test

Preliminary Instructions:

None Applicable.

Step	Operation of Test Component	Point of Test	Control Settings and Operation of Equipment	Performance Standards	
1	Connect DVM to point of test.	A5C1	Normal operation, no special configuration required.	+18V ±0.7V DC	I
2			Disconnect cable at A5J1		
3	Connect signal generator to point of test.	A5J1	Disconnect cable at A5J2	Signal: 14.59 MHz ±1 KHz Level: 0 dBm ±3 dB	
4	Connect power meter to point of test.	A5J2		-8 dBm +4 -2 dB	

Table 6-6. Multiplier Module, Times 630, A5, Performance Test-Continued

Step	Operation of Test Component	Point of Test	Control Settings and Operation of Equipment	Performance Standards
5	Connect counter with 5255A plug-in to point of test.	A5J2		9.19 GHz ±630 KHz
6	Disconnect all test equipment.		Replace cables disconnected at Steps 2 and 3.	

Table 6-7. Synthesizer Module A7, Performance Test

Preliminary Instructions:

Set the internal battery (S1) switch to OFF.

Disconnect all external power from the MRC.

Remove A7 module from the MRC chassis. Connect cables 636A631G01 and 636A632G01 between the A7 module and the MRC chassis.

Set the internal battery (S1) switch to ON.

Apply external power to the MRC.

Note: Allow 20 minute warmup for the Cesium Beam Resonator signal level and Crystal Oscillator frequency to stabilize.

Step	Operation of Test Component	Point of Test	Control Settings and Operation of Equipment	Performance Standards	
1	Connect DVM to each point of test, in turn.	A7J1-2	Normal operation, no special configuration required.	+5V ±0.2V DC	I
		A7J1-5		+18V ±0.7V DC	I
		A7J1-7		-18V ±0.7V DC	I
		A7J1-9		+18V ±0.7V DC	I

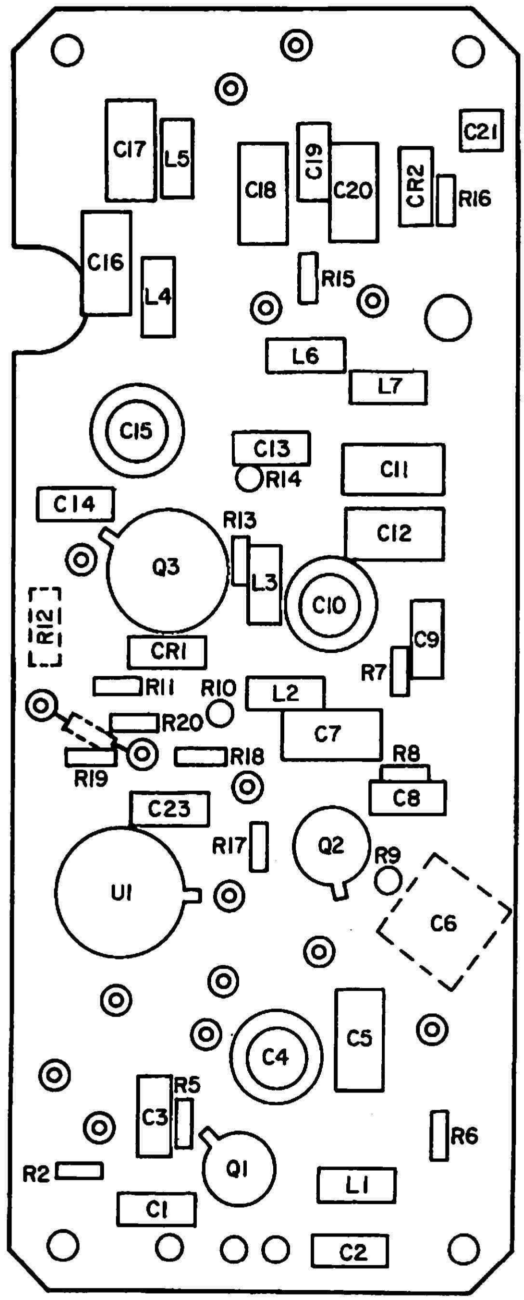

4458-BM-051A

Figure 6-2. Times 18 Multiplier Board Assembly A5A1, Parts Location Diagram

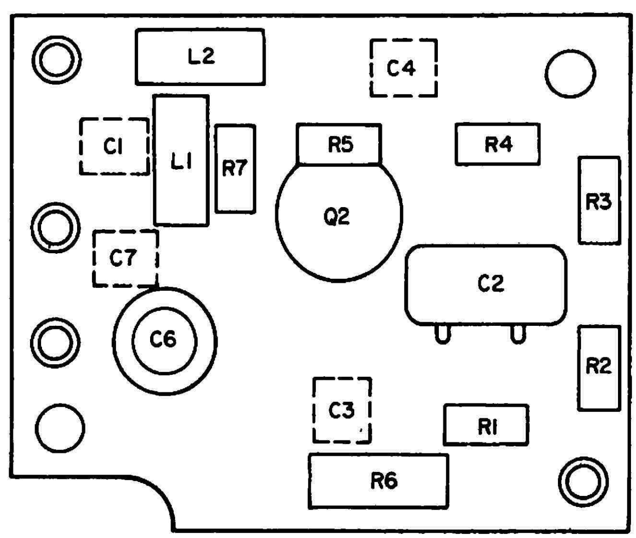

4458-8F-052A

Figure 6-3. 262 MHz Amplifier Board Assembly A5A2, Parts Location Diagram

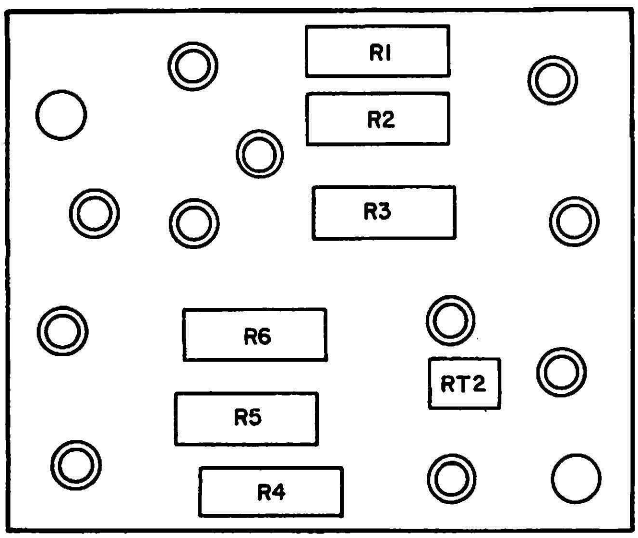

Figure 6-4. Dual Compensation Board Assembly A5A3, Parts Location Diagram

Table 6-7. Synthesizer Module A7, Performance Test-Continued

Step	Operation of Test Component	Point of Test	Control Settings and Operation of Equipment	Performance Standards	
1 (Cont)		A7J1-8		0V ±0.5V DC	I
		A7J1-1		0V ±0.5V DC	O
		A7J2-A7		+5V ±3V DC	O
		A7J2-A8		0V ±0.5V DC	O
2	Connect counter to each point of test, in turn.	A7J2-A1		14,591,479 Hz ±20 Hz	I
		A7J2-A3		5,000,000 ±1 Hz	I
		A7J2-A4		5,000,000 ±0.1 Hz	O
		A7J2-A5		5,000,000 ±0.1 Hz	O
		A7J2-A6		833.3 Hz ±0.1 Hz	O
3	Connect oscilloscope to each point of test in turn.	A7J2-A4		4.0 ±1.0V P-P*	O
		-A5		4.0 ±1.0V P-P*	O
		-A6		4.0 ±1.0V P-P Square Wave	O
				*Distorted Sawtooth Wave	
4	Disconnect all test equipment.				

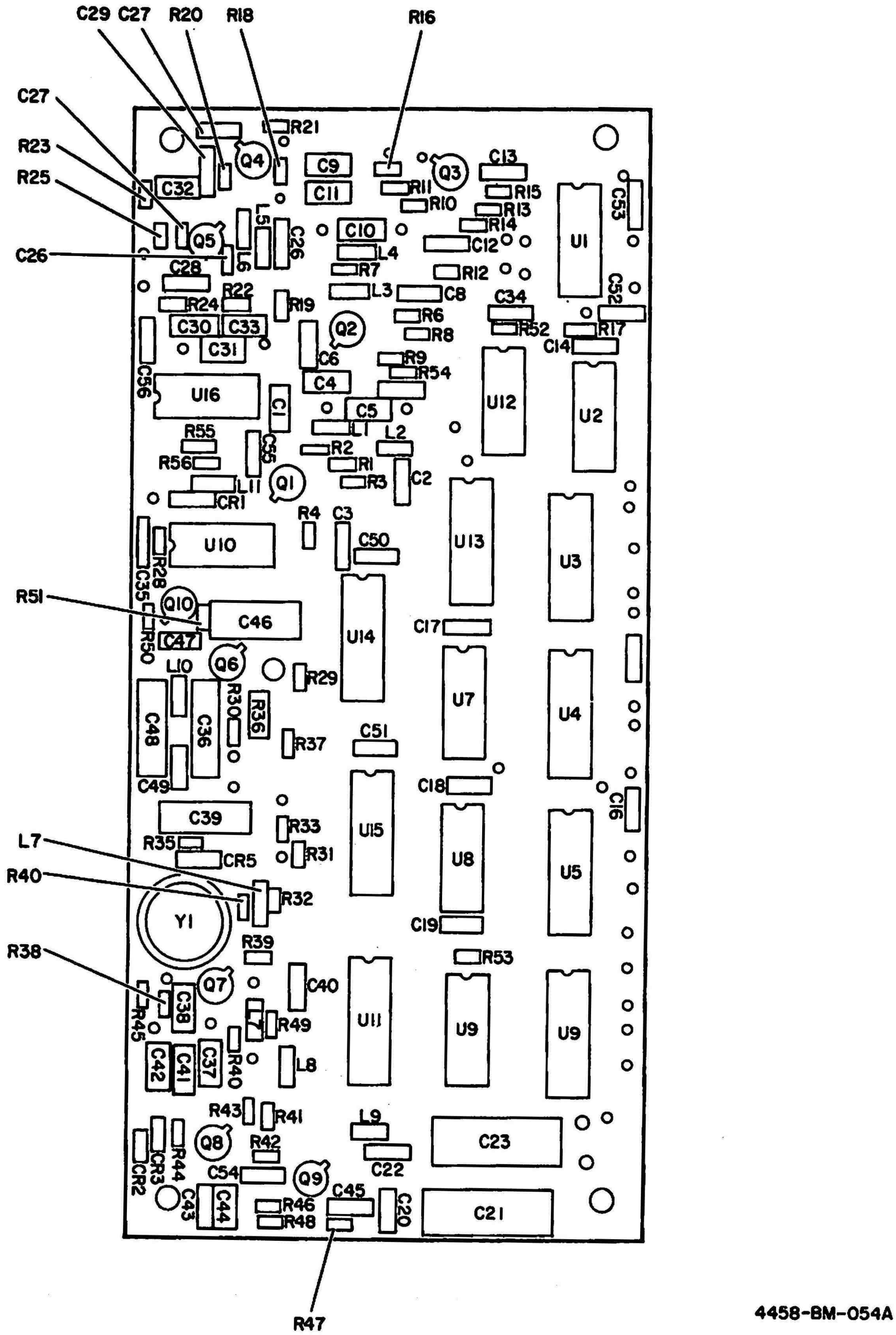

Figure 6-5. Single Side Band and Divider Board Assembly A7A1, Parts Location Diagram

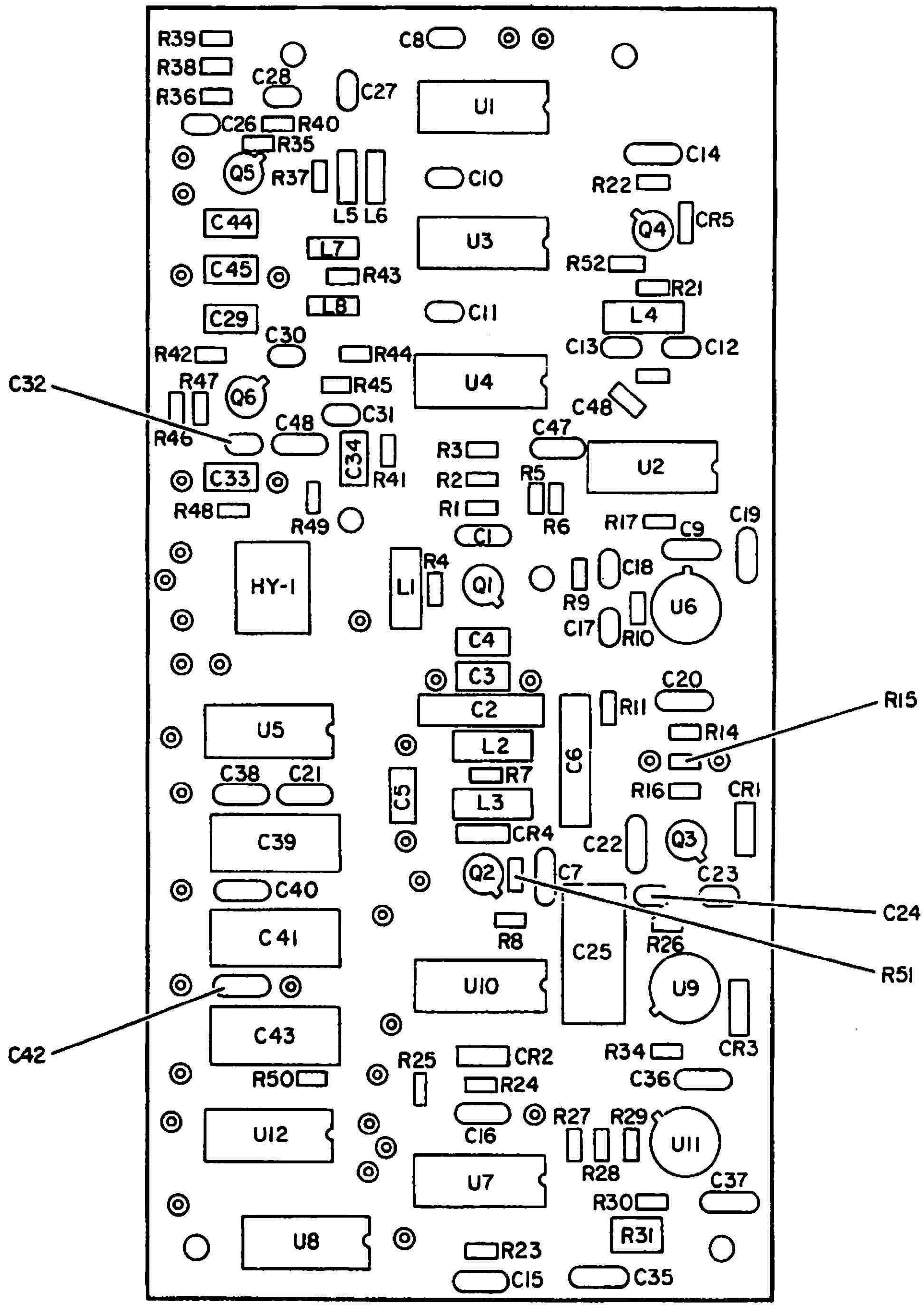

4458-BM-055A

Figure 6-6. Single Side Band and Mixer Board Assembly A7A2, Parts Location Diagram

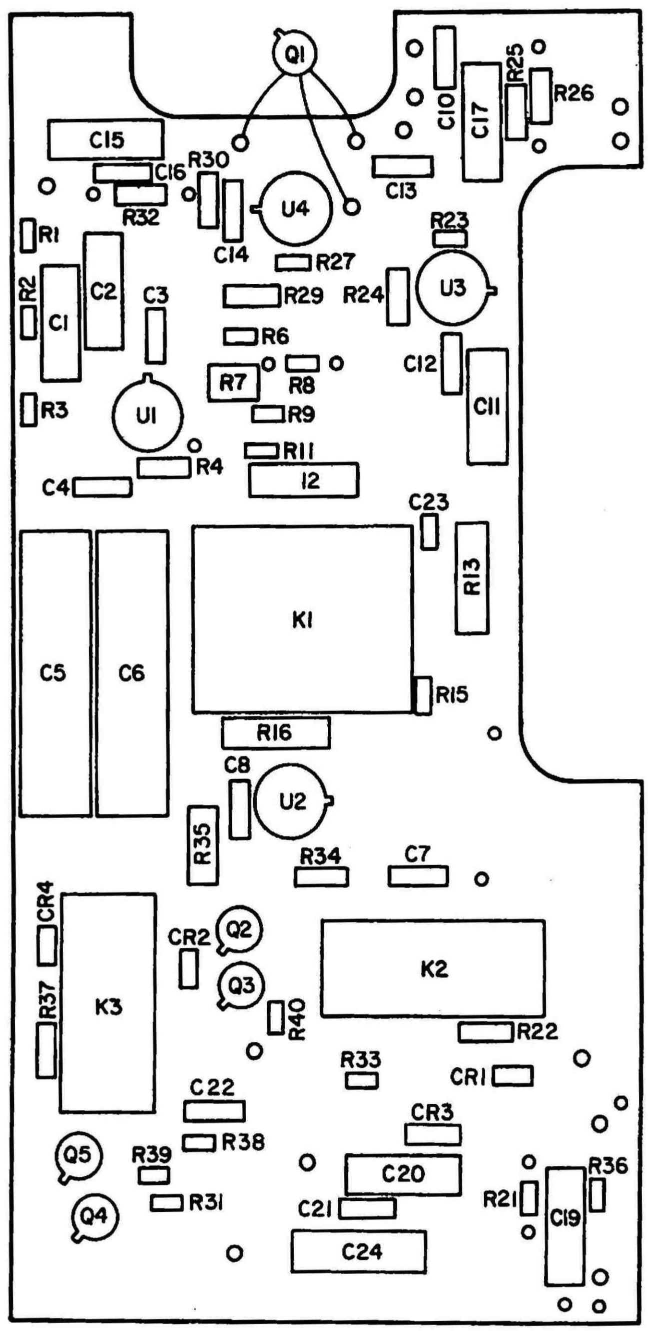

4458-BM-056A

Figure 6-7. Loop Integrator and Regulator Board Assembly A7A3, Parts Location Diagram

Table 6-8. Secondary OCVCXO Module A8, Performance Test

Preliminary Instructions:

Set the internal battery (S1) switch to OFF.

Disconnect all external power from the MRC.

Remove A8 module from the MRC chassis. Connect cable 636A636G01 between the A8 module and the MRC chassis.

Set the internal battery (S1) switch to ON.

Apply external power to the MRC.

NOTE: Allow 20 minute warmup for the Cesium Beam Resonator Signal level and Crystal Oscillator frequency to stabilize.

Step	Operation of Test Component	Point of Test	Control Settings and Operation of Equipment	Performance Standards	
1	Connect DVM to each point of test, in turn.	A8P1-1	Normal operation, no special configuration required.	+18V ±0.7V DC	I
		A8P1-3		0 ±4V DC	O
		A8P1-4		6.2V ±0.5V DC	O
		A8P1-A3		+5V ±3V DC	I
		A8P1-7		+18V ±0.7V DC	O
2	Connect counter to each point of test, in turn.	A8P1-A1		5 MHz ±0.1 Hz	O
		A8P1-A2		5 MHz ±0.1 Hz	O
3	Connect the RF voltmeter to each point of test in turn.	A8P1-A1		0.9 to 1.5V RMS	O
		A8P1-A2		0.32 to 0.40V RMS	O
4	Disconnect all test equipment.				

Table 6-9. Real Time-of-Day Clock Module A9, Performance Test

Preliminary Instructions:

Set the internal battery (S1) switch to OFF.

Disconnect all external power from the MRC.

Remove A9 module from the MRC chassis. Connect cable 636A637G01 between the A9 module and the MRC chassis.

Set the internal battery (S1) switch to ON.

Apply external power to the MRC.

NOTE: Allow 20 minutes warmup for the Cesium Beam Resonator signal level and Crystal Oscillator frequency to stabilize.

Step	Operation of Test Component	Point of Test	Control Settings and Operation of Equipment	Performance Standards	
1	Connect DVM to each point of test, in turn.	A9J1-26 (A9J1-21 RTN)	Normal operation, no special configuration required.	+5V ±0.2V DC	I
		-27 (A9J1-21 RTN)		+5V ±0.2V DC	I
		-28 (A9J1-21 RTN)		+5V +0.2V DC	I
		-29 (A9J1-21 RTN)		+5V ±0.2V DC	I
		-30		+18V ±0.7V DC	I
		-31		+18V ±0.7V DC	I
		-33		+12V ±0.2V DC	I
		-36		-12V ±0.6V DC	I

Table 6-9. Real Time-of-Day Clock Module A9,
Performance Test-Continued

Step	Operation of Test Component	Point of Test	Control Settings and Operation of Equipment	Performance Standards	
2	Connect counter to point of test.	A9J1-1 (A9J1-2 RTN)		5,000,000 ±1 Hz	I
3	Connect oscilloscope to each point of test, in turn. (A9J1-12 RTN) Terminate with 3000 ohm 1/4W Resistor in Parallel with 2500 pf capacitor.	A9J1-5 -13		10 ±1 usec bits, Binary "1": +6 ±1V Binary "0": -6 ±1V	O
		A9J1-6 -14		20 pulse, 100 KHz Square wave train Binary "1": +6 ±1V Binary "0": -6 ±1V	O
		A9J1-7 -15		1 pulse/ sec. Pulse width: 200 ±4 usec. Binary "1": +6 ±1V Binary "0": -6 ±1V	O
		A9J1-8 -16		1 Pulse/ sec. Pulse-width: 10 ±1 usec Binary "1": +6 ±1VDC Binary "0": -6 ±1VDC	O
		A9J1-9 -17		1 Pulse/ min. Pulse-width: 10 ±1 usec. Binary "1": +4 ±1VDC Binary "0": 0 ±0.5VDC (into 50 ohms)	O
4	Disconnect all test equipment.				

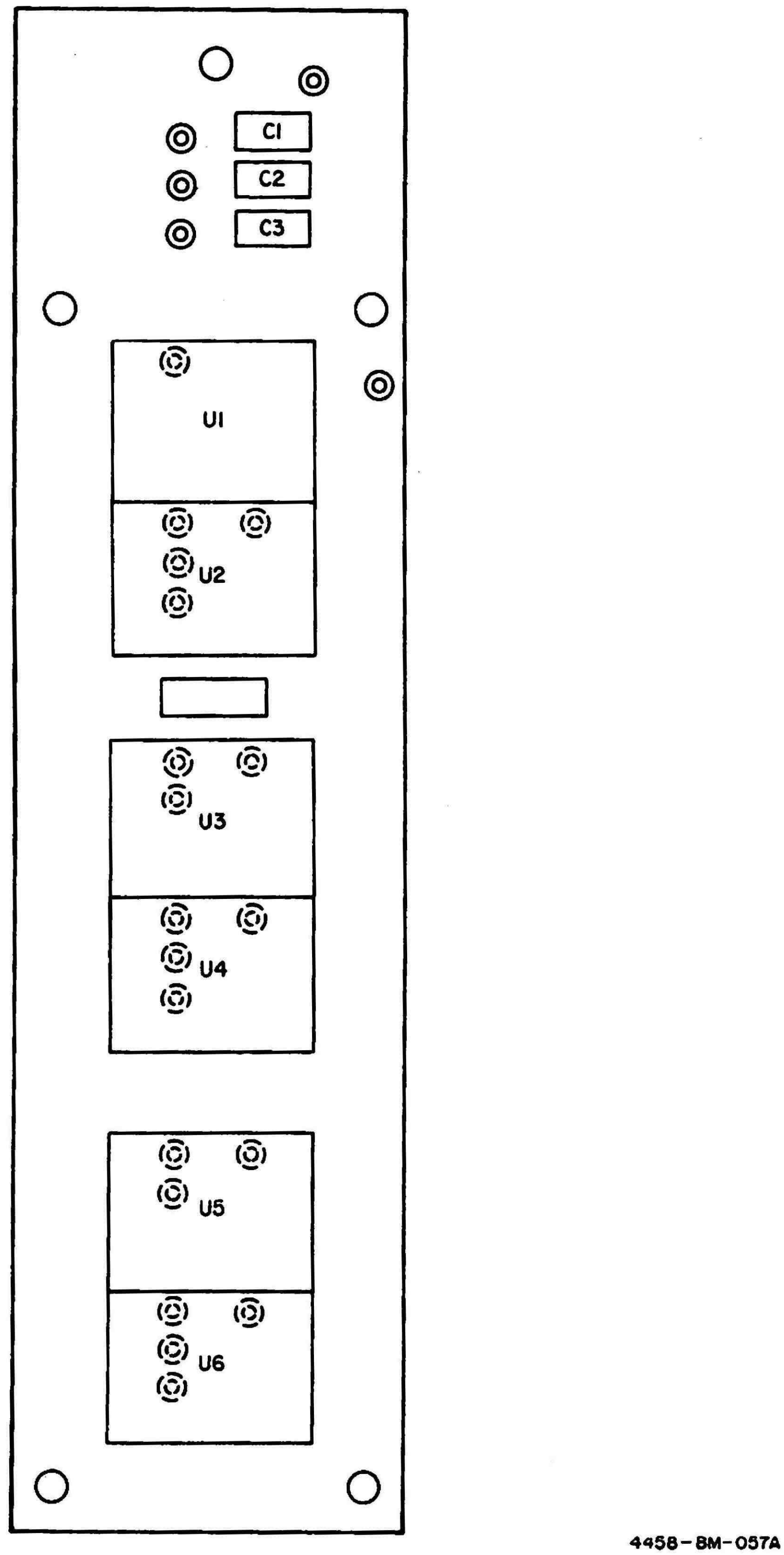

Figure 6-8. Display Board Assembly A9A1, Parts Location Diagram

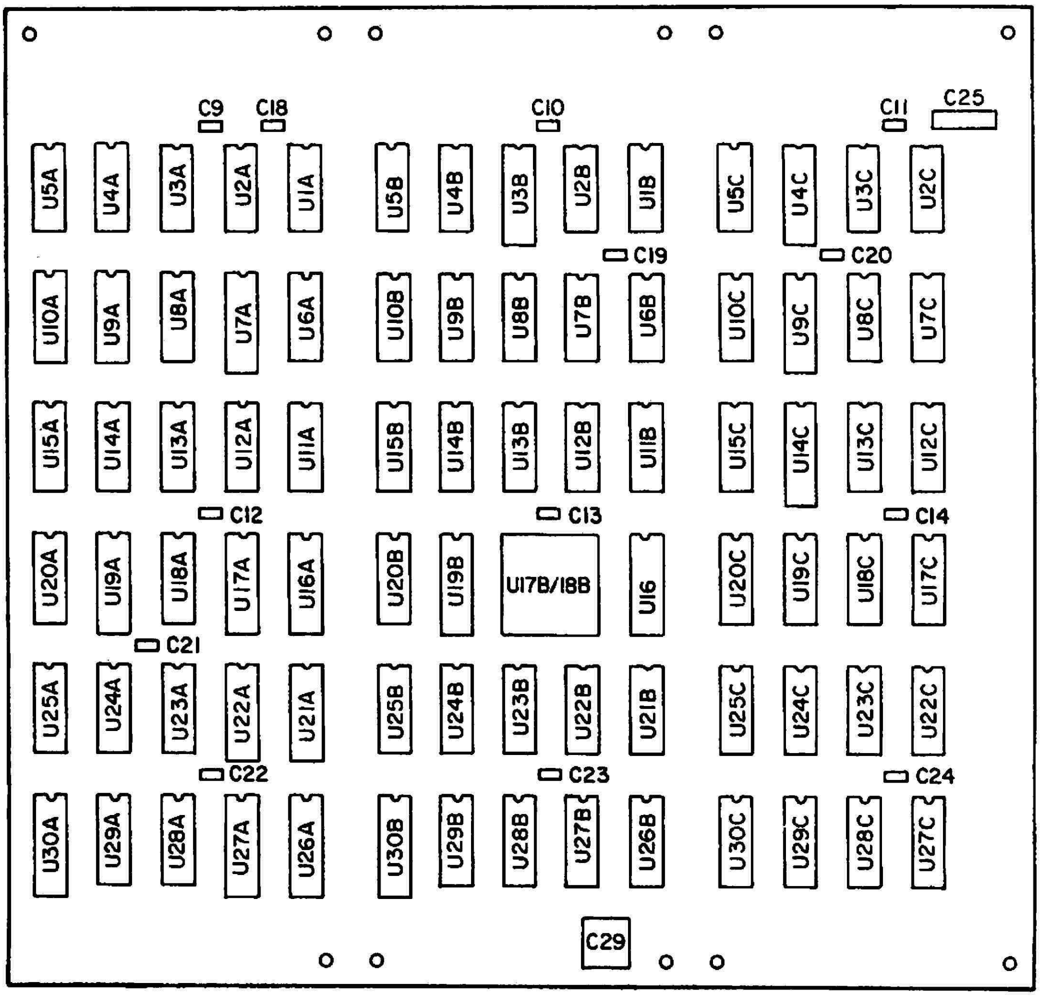

4458-BM-058A

Figure 6-9. Logic Board Assembly A9A2, Parts Location Diagram

Table 6-10. 1MHz, 3MHz Generator Module A10, Performance Test

Preliminary Instructions:

Set the internal battery (S1) switch to OFF.

Disconnect all external power from the MRC.

Remove A10 module from the MRC chassis. Connect cable 636A633G01 between the A10 module and the MRC chassis.

Set the internal battery (S1) switch to ON.

Apply external power to the MRC.

NOTE: Allow 20 minute warmup for the Cesium Beam Resonator signal level and Crystal Oscillator frequency to stabilize.

Step	Operation of Test Component	Point of Test	Control Settings and Operation of Equipment	Performance Standards	
1	Connect DVM to each point of test, in turn.	A10P1-1	Normal Operation, no special configuration required.	+18V ±0.7V DC	I
		A10P1-3		7.5V ±1V DC	I
		A10P1-5		+2V ±0.2V DC	O
2	Connect counter to each point of test, in turn.	A10P1-A1		3 MHz ±0.1 Hz	O
		A10P1-A2		3 MHz ±0.1 Hz	O
		A10P1-A3		1 MHz ±0.1 Hz	O
		A10P1-A4		5 MHz ±1 Hz	I
3	Connect oscilloscope to each point of test, in turn.	A10P1-A1		5.0V P-P ±2.5V into 75 ohms square wave	
		A10P1-A2		Same as A1	
4	Connect RF voltmeter to point of test.	A10P1-A3		+1.0 to 1.5V RMS into 50 ohms.	
5	Disconnect all test equipment.				

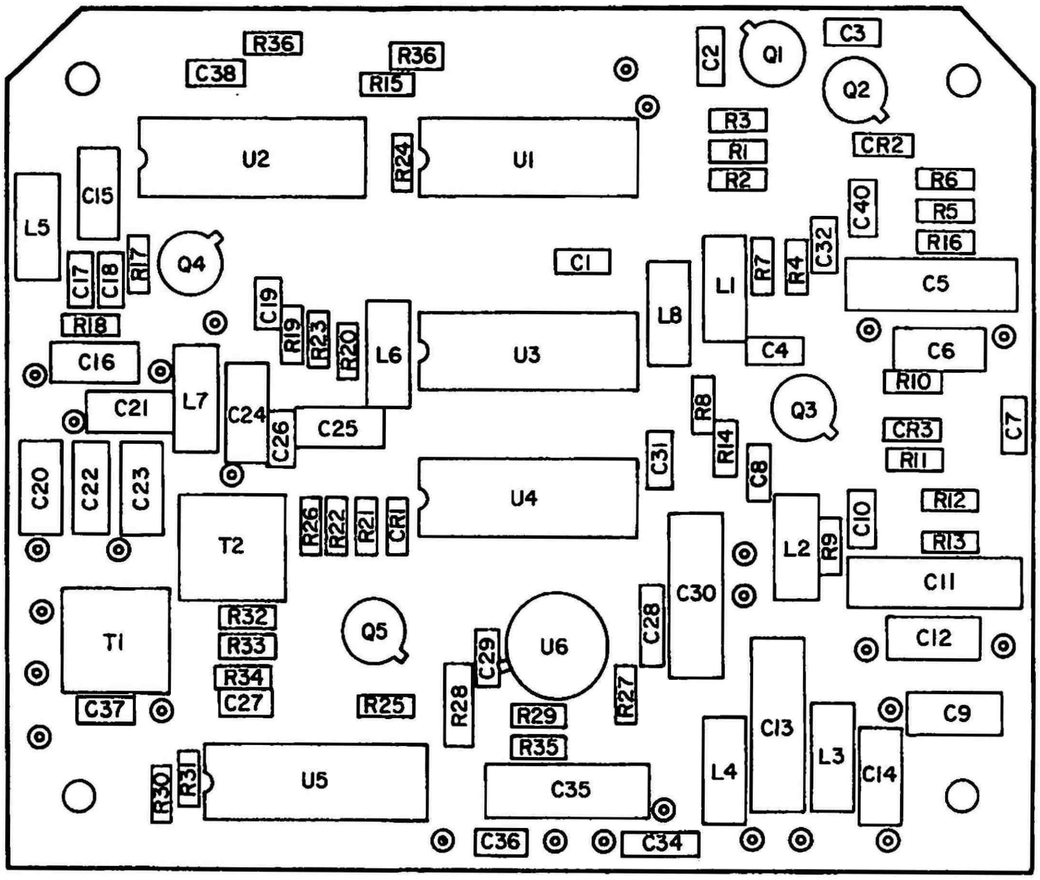

4458-BM-059A

Figure 6-10. 1 MHz, 3 MHz Generator Board Assembly A10A1, Parts Location Diagram

Table 6-11. Regulator P.C. Assembly All and Power Supply, Performance Test

Preliminary Instructions:

Carefully remove protective cover from A0C1, adjacent to All Board.

Step	Operation of Test Component	Point of Test	Control Settings and Operation of Equipment	Performance Standards	
1	Connect DVM to each point of test, in turn.	A11E1/ Yellow	Normal Operation, no special configuration required.	+6V ±1V DC	O
		A11E3/ Orange	With External DC Available	+21 to +30V DC	O
		A11E8/ White/ Orange	With AC power available	2.0 ±0.5V DC	O
			Without AC power available	0V ±1V DC	O
		A11E5/ White/ Green	With External DC Power Avail.	+2.0V ±0.5V DC	O
			Otherwise	0V ±0.5V DC	O
		A11E6/ White/ Brown	AC in Use/DC Avail.	0.5V ±1V DC	O
		A11E7/ White/ Blue	Ext. DC Power in Use	2.0V ±0.5V DC	O
			Otherwise	0V ±1V DC	O
		A11E4/ Black		GND	
		A11E9/ Orange		5V ±1V AC	I
		A11E10/ Red		5V ±1V AC	I
		A11E11/ Green	With External DC Available.	+21 to +30V DC	I
		A0C1 (+)		+21V DC minimum	O

Table 6-11. Regulator P.C. Assembly All and Power Supply, Performance Test-Continued

Step	Operation of Test Component	Point of Test	Control Settings and Operation of Equipment	Performance Standards
2	Disconnect all test equipment.			

Table 6-12. Switching Regulator +18VDC Module A12, Performance Test

Preliminary Instructions:

Set the internal battery (S1) switch to OFF.

Disconnect all external power from the MRC.

Remove A12 from the MRC chassis. Connect cable 636A634G01 between the A12 module and the MRC chassis.

Set the internal battery (S1) switch to ON.

Apply external power to the MRC.

NOTE: Allow 20 minute warmup for the Cesium Beam Resonator signal level and Crystal Oscillator frequency to stabilize.

Step	Operation of Test Component	Point of Test	Control Settings and Operation of Equipment	Performance Standards	
1	Connect DVM to each point of test, in turn.	A12P1-1	Normal operation, no special configuration required.	+21 VDC minimum	I
		A12P1-9		+18V ±0.7V DC	O
		A12P1-10		+18V ±0.7V DC	O
2	Connect oscilloscope to point of test.	A12P1-4		500mv P-P, minimum triangle wave	
3	Disconnect all test equipment				

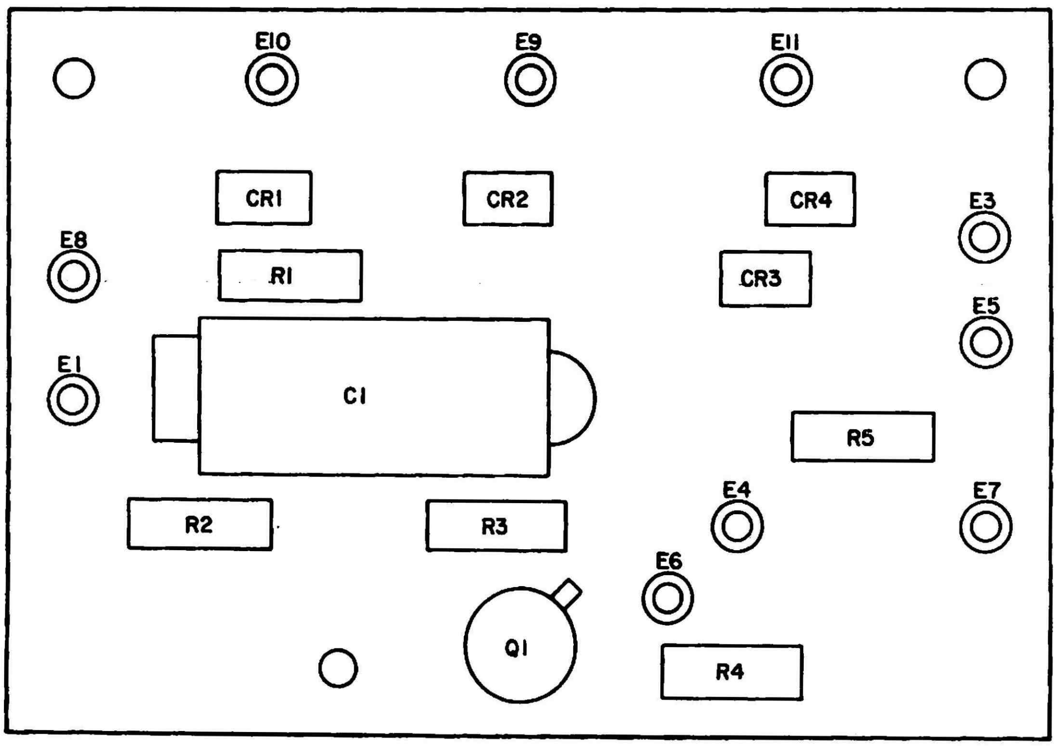

4458-BM-060A

Figure 6-11. Power Supply Regulator Board Assembly A11, Parts Location Diagram

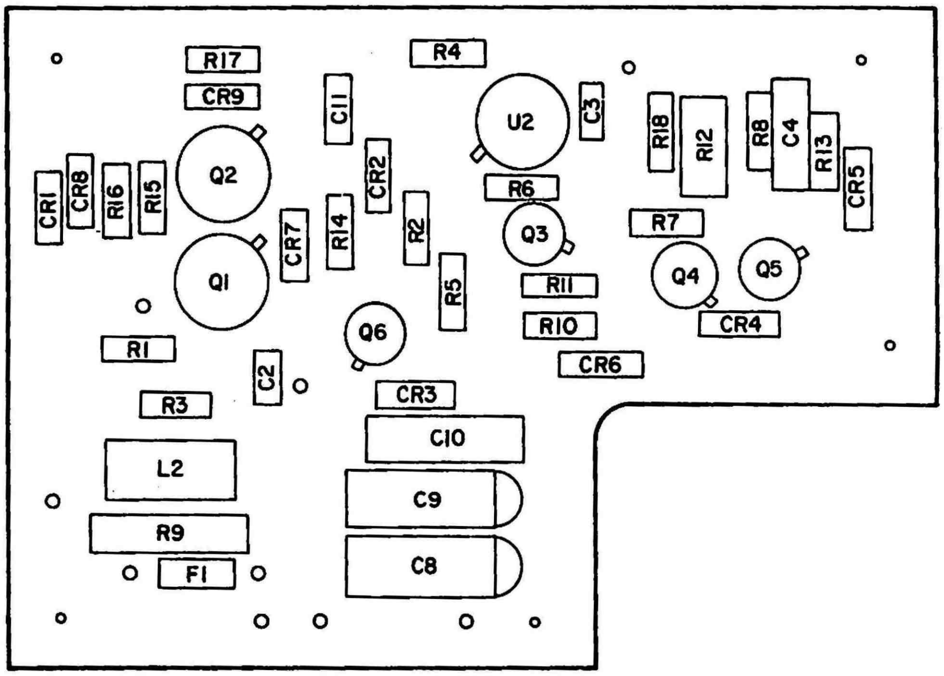

Figure 6-12. +18 VDC Switching Regulator Board Assembly A12A1, Parts Location Diagram

Table 6-13. DC/DC Converter Module A13, Performance Test

Preliminary Instructions:

Set the internal battery (S1) switch to OFF.

Disconnect all external power from the MRC.

Remove A13 module from the MRC chassis. Connect cable 636A634G01 between the A13 module and the MRC chassis.

Set the internal battery (S1) switch to ON.

Apply external power to the MRC.

NOTE: Allow 20 minute warmup for the Cesium Beam Resonator signal level and crystal Oscillator frequency to stabilize.

Step	Operation of Test Component	Point of Test	Control Settings and Operation of Equipment	Performance Standards	
1	Connect DVM to each point of test, in turn.	A13P1-2	Normal Operation, no special configuration required.	+18V ±0.7V DC	I
		A13P1-6 (P1-8 RTN)		+18V ±0.7V DC	O
		A13P1-7 (P1-8 RTN)		+12V ±0.2V DC	O
		A13P1-9 (P1-8 RTN)		-12V ±0.6V DC	O
		A13P1-10		-18V ±0.7V DC	O
		A13P1-11		+7.5V ±1V DC	O
		A13P1-12		+5V ±0.2V DC	O
		A13P1-14		+40V ±4V DC	O
2	Connect oscilloscope to each point of test, in turn.	A13P1-3		500 mV P-P, minimum*	O
		A13P1-4		200 mV P-P, minimum*	O
		A13P1-5 (P1-8 RTN)		500 mV P-P, minimum*	O
				*Triangle Wave	
3	Disconnect all test equipment.				

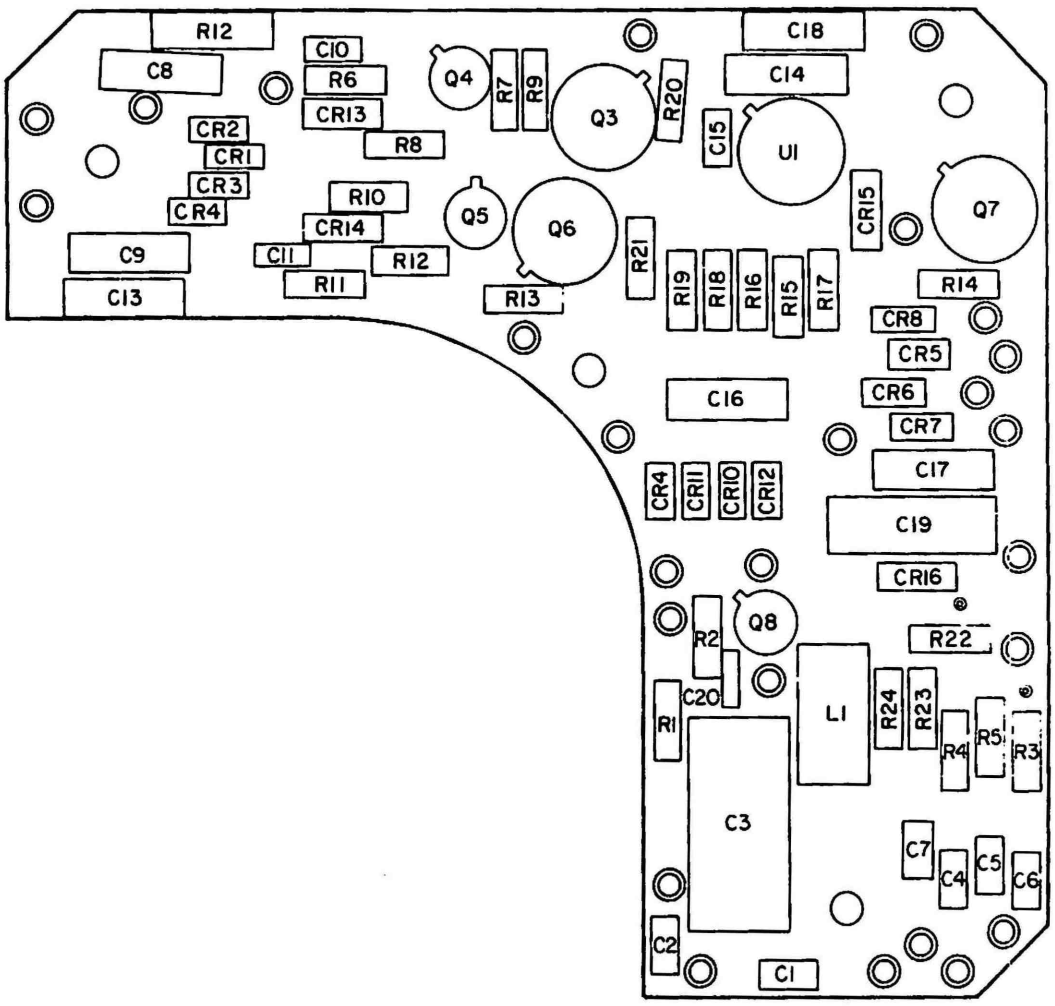

Figure 6-13. DC to DC Converter Board Assembly A13A1, Parts Location Diagram

Table 6-14. Battery Charger And Crossover Module A14, Performance Test

Preliminary Instructions:

Set the internal battery (S1) switch to OFF.

Disconnect all external power from the MRC.

Remove A14 module from the MRC chassis. Connect cable 636A635G01 between the A14 module and the MRC chassis.

Set the internal battery (S1) switch to ON.

Apply external power to the MRC.

NOTE: Allow 20 minute warmup for the Cesium Beam Resonator signal level and crystal Oscillator frequency to stabilize.

Step	Operation of Test Component	Point of Test	Control Settings and Operation of Equipment	Performance Standards	
1	Connect DVM to each point of test, in turn.	A14P1-1	Normal operation, no special configuration required.	+40V ±4V DC	I
		A14P1-3		+5V ±0.2V DC	I
		A14P1-14		+6V ±1.0V DC	I
		A14P1-15		+21V DC Minimum	I
		A14P1-16	External DC Available.	+21V to +30V DC	I
		A14P1-24		+18V ±0.7V DC	I
		A14P1-4		0 ±0.5V DC	O
		A14P1-5		+2V ±0.5V DC	O
		A14P1-7		0 ±0.5V DC	O

Table 6-14. Battery Charger And Crossover Module A14, Performance Test-Continued

Step	Operation of Test Component	Point of Test	Control Settings and Operation of Equipment	Performance Standards	
		A14P1-8		0 ±0.5V DC	O
		A14P1-9		+2V ±0.5V DC	O
		A14P1-10		18V ±0.7V DC	O
		A14P1-11		+12V ±2V DC	O
		A14P1-12		+13V ±2V DC	O
		A14P1-13		+13V ±2V DC	O
		Between A14P1-20 (+) and P1-21		+10V ±2V DC	O
		A14P1-22		+28.8V ±4V DC	I or O
2	Disconnect all test equipment.				

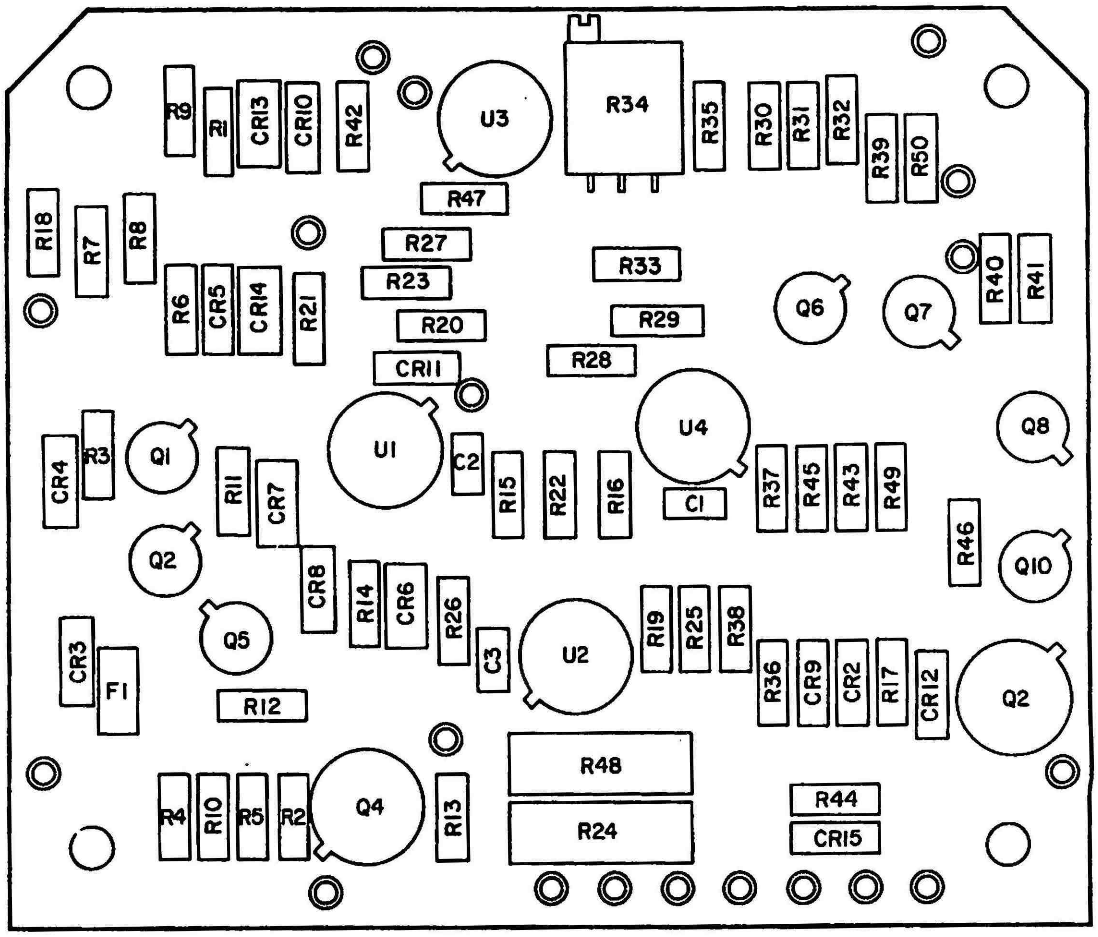

Figure 6-14. Battery Charger Board Assembly A14A1, Parts Location Diagram

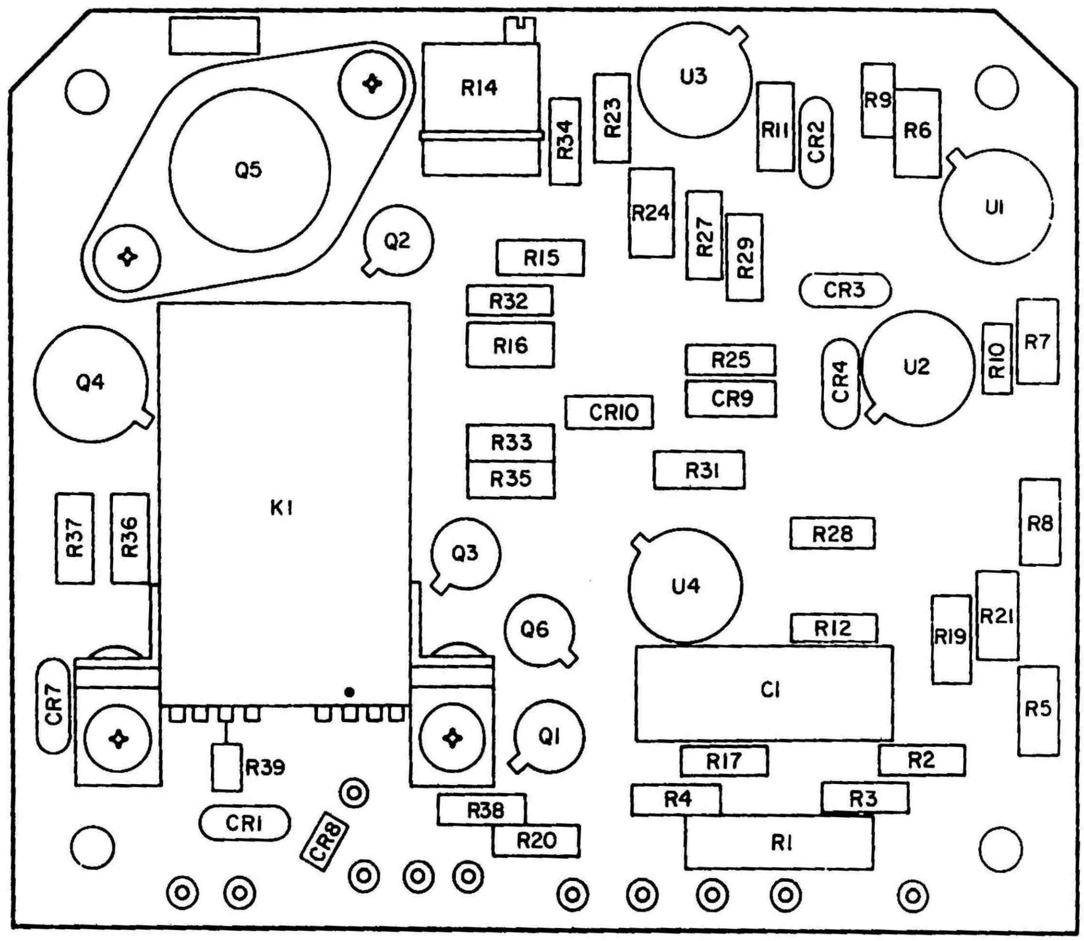

4458-BM-064A

Figure 6-15. Battery Crossover Board Assembly A14A2, Parts Location Diagram

Table 6-15. Switching Regulator +5VDC Module A16, Performance Test

Preliminary Instructions:

NONE

NOTE: Allow 20 minute warmup for the Cesium Beam Resonator signal level and Crystal Oscillator frequency to stabilize.

Step	Operation of Test Component	Point of Test	Control Settings and Operation of Equipment	Performance Standards
1	Connect DVM to each point of test, in turn.	A16FL1 (E1 RTN) A16FL± (E1 RTN)	Normal operation, no special configuration required.	+17V ±0.7V DC I ±5V ±0.2V DC O
2	Connect oscilloscope to point of test.	A16E2		200 mV P-P, I minimum. triangle wave
3	Disconnect all test equipment.			

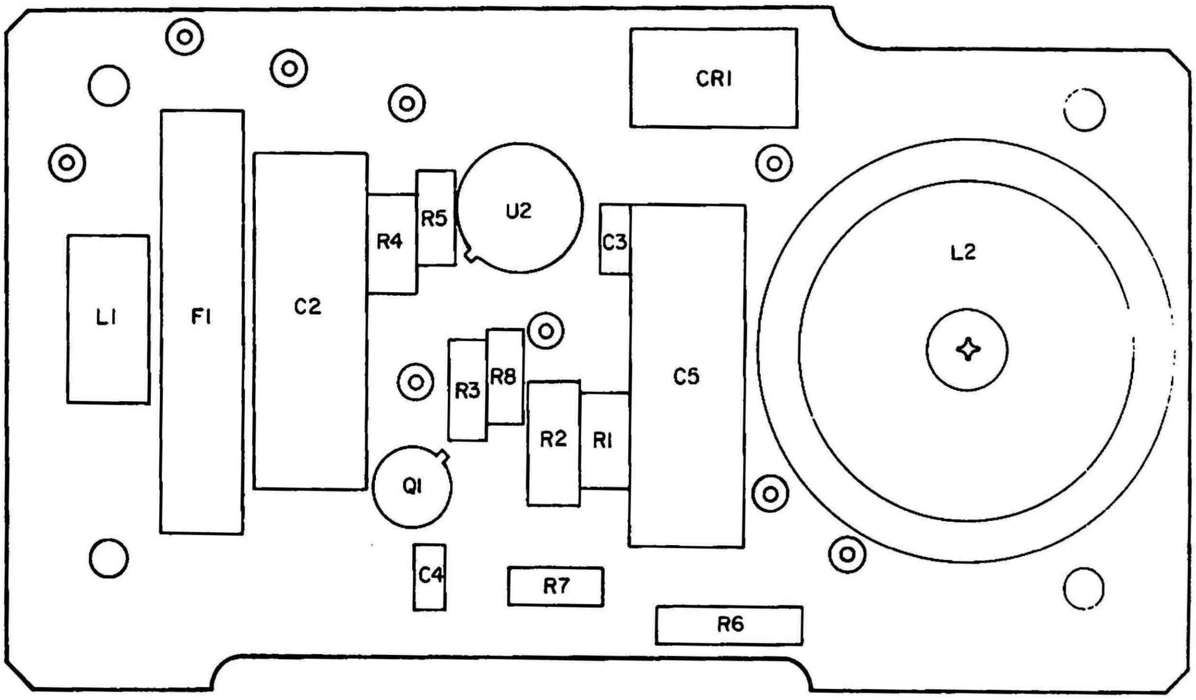

4458-BM-065A

Figure 6-16. +5 VDC and +6 VDC Switching Regulator Module Assemblies A16A1, A19A1, Parts Location Diagram

Table 6-16. +28 VDC Battery Power Supply Module A17, Performance Test

Preliminary Instructions:

Allow Battery to become completely charged.

Approximate charge time for a discharged battery 16 hrs. with AC Power supplied.

Set the internal battery (S1) switch to OFF.

Disconnect all external power from the MRC.

Remove A17 from the MRC chassis. Connect cable 636A634G01 between the A17 module and the MRC chassis.

Set the internal battery (S1) switch to ON.

Apply external power to the MRC.

Step	Operation of Test Component	Point of Test	Control Settings and Operation of Equipment	Performance Standards	
1	Connect DVM to each test point, in turn.	A17P1-1	Normal operation, no special configuration required.	+28.8V ±4V DC	O
		A17P1-2		+28.8V ±4V DC	O
		A17P1-3		+28.8V ±4V DC	O
		A17P1-8		+10.0V ±2.0V DC	I
		(A17P1-7 RTN)			
2	Disconnect all test equipment.				

Table 6-17. Switching Regulator +6 VDC Module A19, Performance Test

Preliminary Instructions:

NONE

Step	Operation of Test Component	Point of Test	Control Settings and Operation of Equipment	Performance Standards	
1	Connect DVM to each point of test, in turn.	A19FL1	Normal operation, no special configuration required.	+18V ±0.7V DC	I
		A19FL2		+4.8V to +5.8V DC	O
2	Connect oscilloscope to point of test.	A19E2		500 mV P-P, minimum, triangle wave	
3	Disconnect all test equipment.				

Table 6-18. Negative HV Power Supply A21, Performance Test

Preliminary Instructions:

NONE

Step	Operation of Test Component	Point of Test	Control Settings and Operation of Equipment	Performance Standards	
	WARNING LETHAL VOLTAGES ARE PRESENT IN THIS ASSEMBLY. USE EXTREME CARE WHEN WORKING ON THIS ASSEMBLY WITH THE EQUIPMENT ENERGIZED.				
1	Connect DVM to each point of test, in turn.	A21E1 (INPUT)	Normal operation, no speical configuration required.	+5 to +10V DC	I
		A21TP4		-7.7V ±2.0V DC	O
2	Disconnect all test equipment.				

Table 6-19. Positive HF Power Supply A22, Performance Test

Preliminary Instructions:

NONE

Step	Operation of Test Component	Point of Test	Control Settings and Operation of Equipment	Performance Standards	
			WARNING LETHAL VOLTAGES ARE PRESENT IN THIS ASSEMBLY. USE EXTREME CARE WHEN WORKING ON THIS ASSEMBLY WITH EQUIPMENT ENERGIZED.		
1	Connect DVM to each point of test in turn.	A22E1 (INPUT)	Normal Operation, no special configuration required.	+13V ±1V DC	I
		A22TP4		+3V ±1V DC	O
2	Disconnect all test equipment.				

Table 6-20. Regulator P.C. Assembly A23, Performance Test

Preliminary Instructions:

NONE

Step	Operation of Test Component	Point of Test	Control Settings and Operation of Equipment	Performance Standards	
1	Connect DVM to each point of test in turn.	A23E1 (WH/OR)	Normal Operation, no special configuration required.	+18V ±0.7V DC	I
		A23E3 (WH/GN)		+5 to +10V DC	O
		A23E4 (WH/GN)		-7.7V ±2.0V DC	I
2	Disconnect all test equipment.				

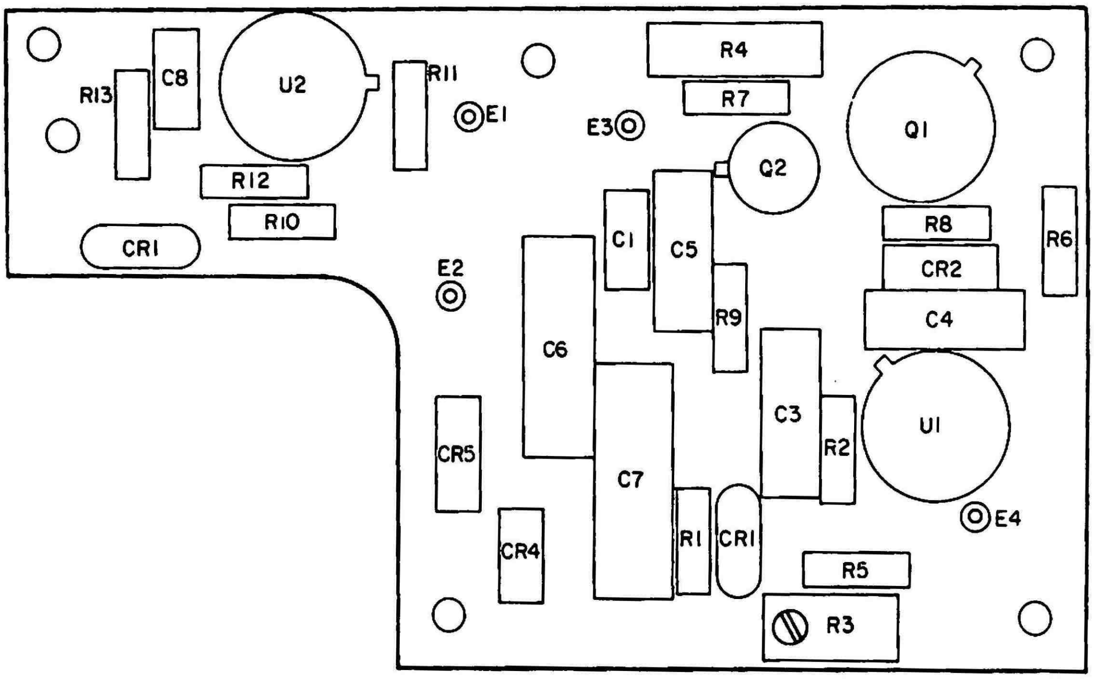

4458-BM-066B

Figure 6-17. Electron Multiplier Regulator Board Assembly A23, Parts Location Diagram

Table 6-21. VAC-Ion Regulator and Interlock Assembly A24, Performance Test

Preliminary Instructions:

NONE

Step	Operation of Test Component	Point of Test	Control Settings and Operation of Equipment	Performance Standards	
1	Connect a VTVM to each point of test in turn.	A24E1 (WH/BL)	Normal operation, no special configuration required.	+3V ±1V DC	I
		A24E4 (WH/RD)		+13V ±1V DC	O
		A24E6 (WH/YL)		+18V ±0.7V DC	I
		A24E7 (WH/OR)		0 to +2V DC	O
		A24E8 (WH/YL)		+18V ±0.7V DC	I
		A24E9 (WH/OR)		+18V ±0.7V DC	O
2	Disconnect all test equipment.				

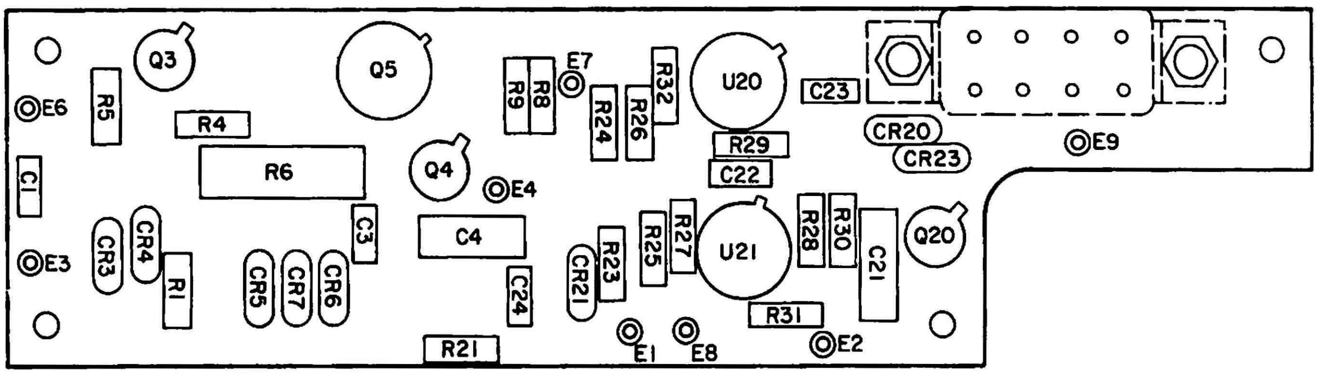

4458-BF-067B

Figure 6-18. VAC-Ion Regulator and Cesium Beam Interlock Board Assembly A24, Parts Location Diagram

Table 6-22. Meter Driver P.C. Assembly A25, Performance Test

Preliminary Instructions:

NONE

Step	Operation of Test Component	Point of Test	Control Settings and Operation of Equipment	Performance Standards	
1	Connect DVM to each point of test, in turn.	A25J1-7	Normal Operation, no special configuration required.	+18V ±0.7V DC	I
		-8		-18V ±0.7V DC	I
		-5		+5V ±0.2V DC	I
		-2		0 ±0.5V DC	O
		-3		+3.5V ±0.5V DC	
		-4		+28.8V ±4.0V DC	I
		-6		+0.65V ±0.1V DC	O
		-9		+2 to +8V DC	I
		-10		+2 to +10V DC	I
		-12		+2 to +8V DC	I
		-13		0 to +0.5V DC	I
		-14		0 ±1V DC	I
		-16		0 ±0.5V DC	I
		A25J2-2		0 ±0.5V DC	I
		-6		0 ±2V DC	I
		-9		0 ±0.5V DC	I
		-11		0 ±0.5V DC	O
		-12		+1.5V ±0.5V DC	I
		-13		-9V ±1V DC	O
2	Disconnect all test equipment.				

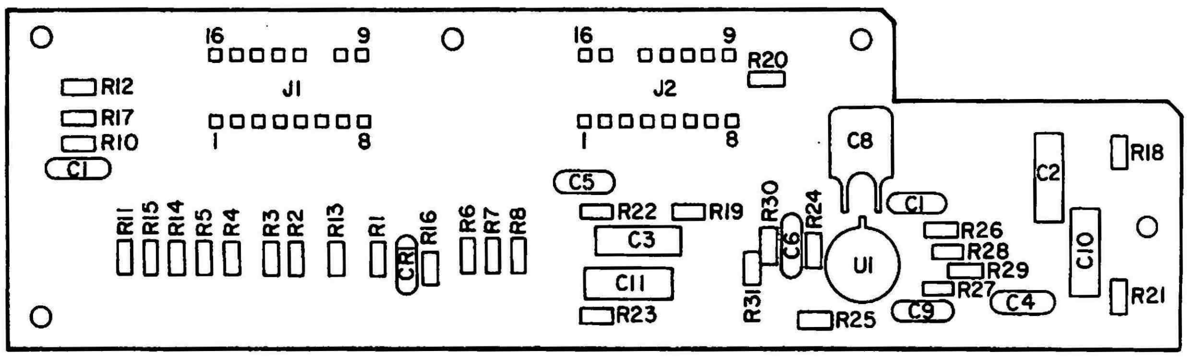

Figure 6-19. Meter Driver Board Assembly A25, Parts Location Diagram

Table 6-23. Alarms Logic P.C. Assembly A26, Performance Test

Preliminary Instructions:

NONE

Step	Operation of Test Component	Point of Test	Control Settings and Operation of Equipment	Performance Standards	
1	Connect DVM to each point of test, in turn.	A26J1-2	Normal Operation, no special configuration required.	+5V ±0.2V DC	I
		A26J1-3		-18V ±0.7V DC	I
		A26J1-8		+2V ±0.5V DC	O
		-9		0 ±1V DC	I
		-10		0 ±1V DC	I
		-11		+4V ±1V DC	I
		-12		+2V ±0.5V DC	O
		-13		+4V ±1V DC	O
		-14		0 ±1V DC	O
		-15		+4V ±1V DC	O
		-16		0 ±1V DC	O
		A26E1		0 ±2V DC	I
		A26E5		0 ±0.5V DC	I
2		Secondary Loop Operate/ Alarm Indicators	Secondary Loop Loop Switch in: OPR	Operate Indicator LIT	
			: OPEN	Alarm Indicator LIT	
3		Primary Loop Operate/ Alarm Indicators	Primary Loop Loop Switch in: OPR	Operate Indicator LIT	
			: OPEN	Alarm Indicator LIT	
4	Disconnect all test equipment.				

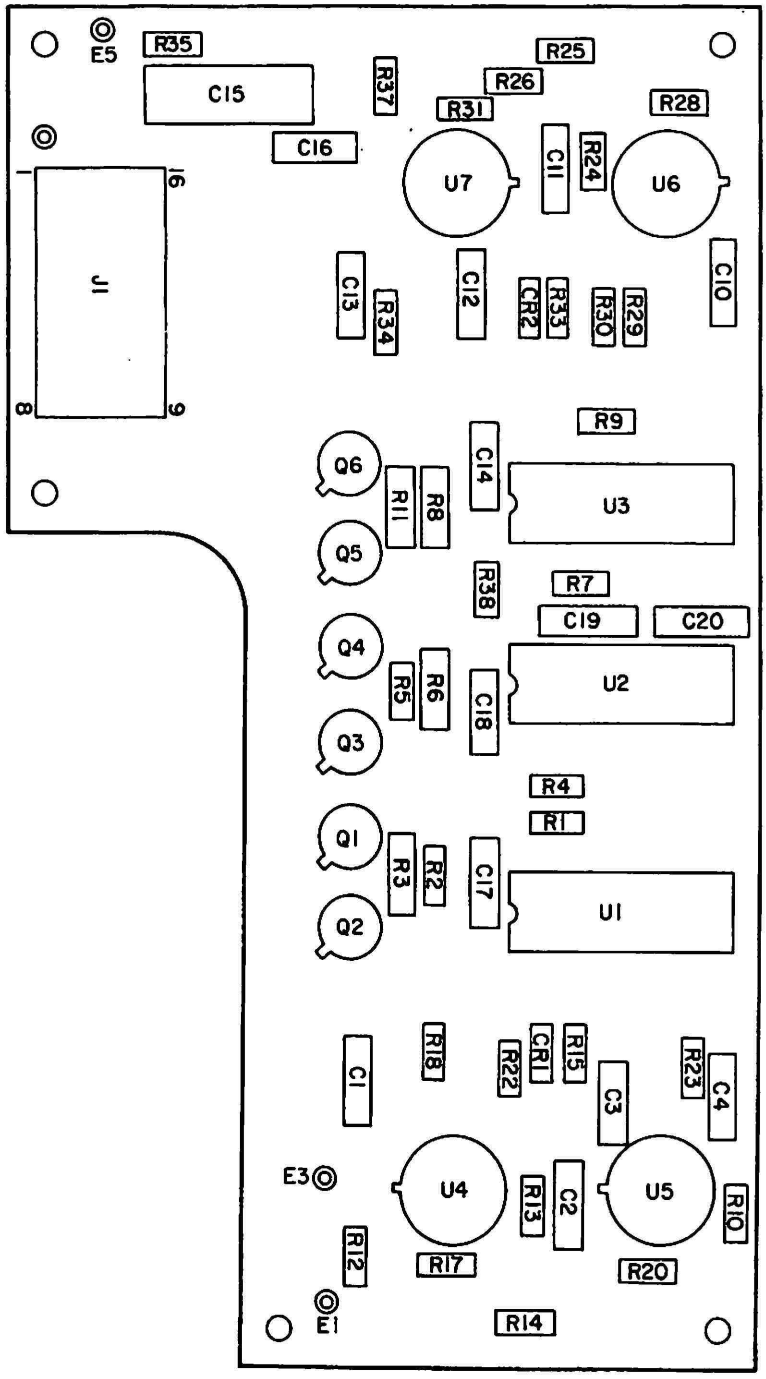

4458-BM-069B

Figure 6-20. Alarms Logic Board Assembly A26, Parts Location Diagram

Section II. SPECIAL MAINTENANCE

6-7. SCOPE. This section covers special maintenance which is useful to maintenance personnel operating at a depot level. It includes information on the troubleshooting of defective modules; it also includes adjustment and calibration data.

6-8. TROUBLESHOOTING. If a module is defective, its performance test table can be used to determine which outputs are faulty. Troubleshooting of the module may then be performed using its schematic diagram (Chapter 8), the illustrated parts breakdown (Chapter 7), and theory of operation (Chapter 5).

6-9. ADJUSTMENTS. The adjustment procedures below are used to adjust the primary loop oscillator, secondary loop oscillator, power supplies, and synthesizer. They are to be done when performance tests show adjustments are necessary.

a. Primary loop 14.59 + MHz crystal oscillator adjustment. To adjust the 14.59 + MHz crystal oscillator, proceed as follows:

1. Place CIRCUIT CHECK switch in position 9. Observe CIRCUIT CHECK meter indication. The meter shall read 0 ±40. If indication is outside ±40 end points, readjust oscillator frequency.

2. Remove MRC top cover and locate 14.59 + MHz OCVCXO module A4. (A4 is directly in front of rear panel on right side partition.)

3. Remove FREQUENCY ADJUSTMENT access hole cover. Using alignment tool, adjust control as necessary to zero CIRCUIT CHECK meter.

4. Replace access hole cover and MRC top cover.

b. Secondary loop 5 MHz oscillator adjustment. To adjust the 5 MHz oscillator, proceed as follows.

1. Place CIRCUIT CHECK switch in position 10. Observe CIRCUIT CHECK meter indication. The meter shall read 0 ±40. If indication is outside ±40 end points, readjust oscillator frequency.

2. Set front panel SECONDARY LOOP TIME CONST at FAST.

3. Adjust front panel OSCILLATOR ADJUST control slowly, as necessary, to zero CIRCUIT CHECK meter.

c. Power supply adjustments. The following power supplies may require adjustment if their output levels are not in accordance with the following requirement:

Module	DC output level requirement
A12	DC output level +18 V DC ±0.7 V DC.
A16	DC output level +5.0 V DC ±0.2 V DC
A19	DC output level +4.8 V DC to +5.8 V DC (Refer to Note)
A23	DC output level +5.0 V DC to +10.0 V DC (Refer to Note)

NOTE

This level is adjusted to individual Cesium beam tube voltage requirements.

1. Module A12 (switching regulator module, +18 V DC). Connect digital voltmeter between pin 9 (+) and pin 15 (-). Digital voltmeter reading shall be +18.00 V DC ±0.2 V DC. If not, adjust potentiometer A12R12 to obtain normal reading.

2. Module A16 (switching regulator module, +5 V DC). Connect digital voltmeter between FL2 (+) and E2 (-). Digital voltmeter reading shall be +5.00 V DC ±0.2 V DC. If not, adjust potentiometer A16R2 to obtain normal reading.

3. Module A19 (switching regulator module, +6 V DC). Connect digital voltmeter between FL2 (+) and E2 (-). Digital voltmeter shall read between 4.8 V DC and 5.8 V DC. If not, adjust potentiometer A19R2 to obtain a normal reading.

NOTE

The voltage is nominally 5.0 V DC, however, it varies from Cesium beam tube to Cesium beam tube. Refer to data on the Cesium beam tube for exact requirements.

4. Module A23 (regulator pc assembly, electron multiplier).

CAUTION

Since the voltage requirement for each Cesium beam tube is different, refer to data for specific tube installed in equipment for exact voltage requirements.

(a) Connect a digital voltmeter between A21E1 and A21E2, and a digital voltmeter between A21E5 (-) and A21E6 (+).

NOTE

The nominal output voltage of A23 is between +5 V dc and +10 V dc.

(b) Adjust A23R2 until the digital voltmeter across A21E5 and A21E6 reads 2.2 nominal. (This is equivalent of -2200 V dc). Since the voltage requirement for each Cesium beam tube is different, refer to data for specific tube installed in equipment for exact voltage requirements.

d. Synthesizer Frequency Adjustment. Adjustment of the synthesizer is accomplished by adjusting the synthesizer module A7 frequency selector thumbwheel switch A7S1 at the rear of the MRC. The thumbwheel switches under the hinged cover on the rear panel of the MRC permit offsetting of the 5 MHz output frequency, as necessary, to accommodate possible deviations in the 5 MHz frequency due to aging. These switches are also used when calibrating the MRC to an external reference signal. Remove the cover plate for access to the thumbwheel adjustment switches. Refer to table 6-24 for output frequency versus thumbwheel settings, adjusting the thumbwheel switches to achieve the correct offset frequency.

Table 6-24. Synthesizer A7 Frequency Adjustment

Instructions:

From the 2-hour test in the minimum performance table, determine how much in error the frequency is.

Look at the thumbwheel switch settings to see what offset frequency is presently being used.

From the listing below, find the offset frequency that will produce the proper change to bring the unit into tolerance.

Set the thumbwheel switches to the corresponding setting for the desired offset frequency.

Table 6-24. Synthesizer A7 Frequency Adjustment-Continued

Thumbwheel settings		Offset frequency ($\frac{f}{f_0}$)
Min	1450	-3.90×10^{-10}
Nom	1699	-4.23×10^{-13}
Max	2050	$+3.88 \times 10^{-10}$
	1460	-3.72×10^{-10}
	1490	-3.19×10^{-10}
	1520	-2.68×10^{-10}
	1550	-2.19×10^{-10}
	1580	-1.71×10^{-10}
	1610	-1.26×10^{-10}
	1630	-9.65×10^{-11}
	1650	-6.79×10^{-11}
	1670	-3.99×10^{-11}
	1680	-2.61×10^{-11}
	1690	-1.25×10^{-11}
	1691	-1.12×10^{-11}
	1692	-9.82×10^{-12}
	1693	-8.47×10^{-12}
	1694	-7.12×10^{-12}
	1695	-5.78×10^{-12}
	1696	-4.44×10^{-12}
	1697	-3.10×10^{-12}
	1698	-1.76×10^{-12}
	1699	-4.23×10^{-13}
	1700	$+9.12 \times 10^{-13}$

Table 6-24. Synthesizer A7 Frequency Adjustment-Continued

Thumbwheel settings	Offset frequency ($\frac{f}{f_0}$)
1701	$+2.25 \times 10^{-12}$
1702	$+3.58 \times 10^{-12}$
1703	$+4.91 \times 10^{-12}$
1704	$+6.24 \times 10^{-12}$
1705	$+7.57 \times 10^{-12}$
1706	$+8.89 \times 10^{-12}$
1707	$+1.02 \times 10^{-11}$
1708	$+1.15 \times 10^{-11}$
1709	$+1.29 \times 10^{-11}$
1710	$+1.42 \times 10^{-11}$
1720	$+2.73 \times 10^{-11}$
1750	$+6.57 \times 10^{-11}$
1780	$+1.03 \times 10^{-10}$
1810	$+1.38 \times 10^{-10}$
1850	$+1.85 \times 10^{-10}$
1890	$+2.29 \times 10^{-10}$
1930	$+2.71 \times 10^{-10}$
1970	$+3.12 \times 10^{-10}$
2010	$+3.51 \times 10^{-10}$

6-10. PREVENTIVE MAINTENANCE. There are several functions that are to be performed periodically on the MRC. Each is described below.

a. MRC periodic operation. After on MRC has been in storage for four months, it is to be removed from storage and operated for six hours minimum. It then may be returned to storage.

b. Tube calibration. The cesium beam tube is to be calibrated every six months. Calibration is performed in accordance with T.O. 33K3-4-1-22.

c. Periodic battery check. The internal battery power supply, A17, in an operating system, should be removed and sent to the battery shop for testing and/or repair every three months. At the time of removal, a known good charged battery should be installed. For a system in storage, the removal and replacement time is the time the stored system is exercised for six hours (see a. above).

1. Removal and replacement of the battery installed in an operational system shall be accomplished as follows:

(a) Loosen the four (4) thumbscrews on front panel holding system in rack.

(b) Remove system from rack and place on workbench or similar work surface.

(c) Connect AC power cable to connector P1 and apply AC power to system. Verify POWER SOURCE IN USE AC indicator is lit.

(d) Loosen the 37 captive screws in the top cover and remove cover from system.

(e) Loosen the four (4) screws in the two brackets holding the battery in the system and remove the two brackets.

(f) Loosen the two retaining screws holding the cable plug to battery jack J1. Do not remove cable plug.

(g) Obtain replacement battery.

WARNING

For all operational systems, the next six steps must be completed within two minutes of starting.

(h) Set battery switch S1 to OFF.

(i) Remove cable plug from battery jack J1.

(j) Remove battery from system.

(k) Install replacement battery.

(l) Insure that battery switch S1 is in OFF position; then connect cable plug to battery jack J1.

(m) Set battery switch S1 to ON.

(n) Tighten the two retaining screws that hold the cable plug to battery jack J1. Insure POWER SOURCE AVAILABLE BAT indicator is lit.

(o) Obtain and replace battery retaining brackets.

(p) Obtain and replace system top cover.

(q) Disconnect AC Power and disconnect AC power cable.

(r) Place system in rack and tighten four (4) front panel thumbscrews to hold system in rack.

(s) Verify system is operating normally with no ALARM indicators.

2. Battery requirements (for battery shop testing) are as follows:

(a) Battery output pins are +28V on J1-1, 2, and 3 and +28V RTN on J1-13, 14, and 15.

(b) Temperature sensing thermistor of 4K ohms nominal between pins J1-7 and J1-8.

(c) Battery capacity for a fully charged battery is 42 watts for a period of one (1) hour minimum, and after the one hour period, the battery voltage is not below the system drop-out minimum of 24 VDC.

(d) Battery charging current is 150mA, 37vdc maximum for high rate and 15 to 25 mA, 34 vdc maximum for trickle rate. Maximum charging time for the high rate is 16 hours, and for the trickle rate is infinite.

6-11. CONFORMAL COATING. The conformal coating used on circuit boards and components is Humiseal, type 1A27, manufactured by Humiseal division of Columbia Chase Corp.

a. Remove of Humiseal from any area may be accomplished by scrubbing with a solvent such as chlorothene.

b. Application of Humiseal to any area is accomplished by spraying and allowing to dry per manufacturer's directions.

CHAPTER 7

ILLUSTRATED PARTS BREAKDOWN

SECTION I

INTRODUCTION

7-1. GENERAL. This Illustrated Parts Breakdown contains listings, descriptions, and illustrations of assemblies, subassemblies, and detail parts which comprise Master Regulating Clock, TD-1251/U, manufactured by Westinghouse Electric Corporation, Integrated Logistics Support Division, Hunt Valley, Maryland.

a. The illustrated-parts-breakdown introduction contains information concerning the contents of the following tabulations. It also explains how they are to be used when parts ordering and parts location information is desired. Each tabulation is explained separately on a column-by-column basis with appropriate reference to other columns when they are interrelated. An illustration is included at the end of this text which explains how to use this illustrated parts breakdown.

7-2. MAINTENANCE PARTS LIST. The Maintenance Parts List contains a breakdown of the end item into its major assemblies, subassemblies, and detail parts. It is divided into figures each of which contains an illustration(s) and an accompanying parts list. The figures are directly interrelated through the use of cross-reference notes in the Description column. These cross-reference notes indicate which figure contains the breakdown of a particular subassembly and which figure contains the breakdown of the next higher assembly that contains that particular subassembly.

a. Maintenance significant assemblies and parts installed at the time the end item was manufactured are listed and identified in the Maintenance Parts List. When an assembly or part, that is different from the original item, was installed during the manufacture of later configurations of the end item, all assemblies and parts are listed and identified as to configuration application through the use of "used on" notes in the DESCRIPTION column or by the assignment of coding in the USABLE ON CODE column.

b. When the original assembly or part no longer has continued application in the end item, only the preferred item is listed. If an assembly or part was installed during modification of the end item, and the original replaced item no longer has continued application, only the replacement part is listed.

c. Interchangeable and substitute assemblies or parts, subsequently authorized by the procuring activity, are not listed in the Maintenance Parts List. Such items are identified by information available through the Interchangeable and Substitute Data System (refer to T.O. 00-25-184).

d. When a standard size part listed in the Maintenance Parts List can be replaced with an oversize or undersize part, the replacement parts, showing sizes, are also given. Repair parts kits are listed when they are available for installation in the end item for which this Illustrated Parts Breakdown was prepared.

e. Parts of similar assemblies, broken down within a figure or broken down in a separate figure, are listed individually depending upon their commonality to the similar assemblies. For example, parts common to all similar assemblies and having the same quantity are listed only once at one indent under the similar assemblies. Parts common to all similar assemblies and having different quantities are listed individually with their appropriate quantity. A "used on" note is given in the DESCRIPTION column to define which quantity applies to which similar assembly. Parts peculiar to each similar assembly are listed only once at one indent under the similar assemblies. The appropriate quantity is specified and the "used on" note is employed after the description to identify applicability of the parts.

f. The Maintenance Parts List is composed of seven columns, each of which contains information applicable to the end item. The contents of each of these seven columns is described in the following paragraphs.

g. Figure and Index Number. Items are identified by index numbers appearing in the applicable illustrations. These index numbers are arranged in the first column of the Maintenance Parts List in consecutive numerical order. For those figures which require one illustration the number preceding the dash indicates the figure number of the illustration which shows the part; the number following the dash is the index number of the part in the associated illustration. The figure number is not repeated at each index number on a parts list page, but is repeated at the top of each subsequent page of listing within a figure.

h. When two or more illustrations are used within a figure to show all parts of an assembly, the figure number, illustration sheet number, and the index number are given in the FIGURE AND INDEX NO. column. The figure number and the illustration sheet number are separated by a diagonal (/). For example, a typical entry in this column is 3/2 - 5 where 5 is the index number in figure 3 and it appears on sheet 2 of the illustrations accompanying figure 3.

i. Part Number. The second column of the Maintenance Parts List identifies the part by a Westinghouse Electric Corporation part number, a military or federal specification number, or a vendor's part number.

Vendor parts are identified by the Vendor's part number in the PART NUMBER column and the vendor's code in the FSCM column. For vendor part numbers exceeding 16 digits, the complete part number is repeated in the DESCRIPTION column.

(1) Part numbers for Government Furnished Equipment (GFE) and Contractor Furnished Equipment (CFE), listed in the Maintenance Parts List, are followed by a number sign (#) flush right in the PART NUMBER column behind each part number. This number sign denotes that the breakdown of these GFE and CFE items are contained in separate manuals. When applicable, a list of these separate manuals is given in the latter portion of this section.

(2) Part numbers for markings (decals, metalcals, vinyl film markers, etc) are followed by an asterisk (*) flush right in the PART NUMBER column behind the part number. This asterisk denotes that the marking is to be requisitioned in accordance with the requirements of AFR 6-4.

j. Federal Supply Code for Manufacturers (FSCM). This column contains the manufacturer's code as given in the Federal Supply Code for Manufacturers, Cataloging Handbook H4. Manufacturers' codes used in this manual are listed in the Vendors' Codes table at the end of this text. In addition to the manufacturer's code for vendor parts, the specification control drawing for the item is given in a parenthetical note in the DESCRIPTION column immediately following the manufacturer's code.

k. Description. In each figure of the Maintenance Parts List, the assembly or subassembly broken down is listed under numeral 1 appearing at the top of the DESCRIPTION column, and each assembly, subassembly, or part is indented thereafter in accordance with its relationship to the item immediately preceding. For example, all items indented under 3 are parts of the item immediately above indented under 2 (disregarding attaching parts). The abbreviation (AP) after the description is used to define the attaching parts for a particular assembly, subassembly, or detail part. Attaching parts are always listed at the same indent as the item they attach.

l. When a Federal Supply Code for Manufacturer's is not published in the Cataloging Handbooks H4, the word "NONE" appears in this column. Where the word "NONE is listed in the FSCM column the complete name and address of the vendor is shown in parenthesis following the description.

m. Units Per Assembly. Quantities in this column are determined by the number of identical assemblies and subassemblies listed in the Maintenance Parts List. For each identical assembly of the equipment, the total quantity is given, but for subassemblies and detail parts of the assembly, the quantity listed is that used in only one of the identical assemblies. For example, the units per assembly specified for items indented under an assembly having a quantity of two are quantities required for only one such assembly. The abbreviation REF in this column signifies that the units per assembly for the part has already been accounted for earlier in the listing or in a previous figure. The abbreviation AR is given for items to be procured in bulk and used As Required.

n. Usable On Code. Letters in this column indicate the applicability of assemblies, subassemblies, and detail parts to the various configurations or models of the end item. Lack of a code letter in the USABLE ON CODE column indicates that the part is used in all models or configurations of the end item covered by this Illustrated Parts Breakdown.

o. Source, Maintenance and Recoverability Code. Source, maintenance, and recoverability (SMR) codes assigned to the end item covered by this Illustrated Parts Breakdown are given in the last column of the Maintenance Parts List. The SMR code is a five-position code consisting of a two-position Source Code, a two- position Maintenance Code, and a one-position Recoverability Code, in that order from left to right. The SMR codes given are those assigned by the procuring activity. Definitions of applicable SMR codes are set forth in T.O. 00-25-195.

7-3. NUMERICAL INDEX. The Numerical Index is an alphanumerical listing by part number of all items listed in the Maintenance Parts List. All appearances of a particular part number in the Maintenance Parts List are specified in the second column, the total quantity used in the end item is specified in the third column, and the source, maintenance, and recoverability code assigned to the part is given in the last column. Detailed explanations of the contents of each column of the Numerical Index are given in the following paragraphs.

a. Part Number. The numbers in the first column of the Numerical Index are the same as those appearing in the PART NUMBER column of the Maintenance Parts List. When another number, other than the part number established by the original manufacturer, has been assigned to a specification-controlled part, both the specification control drawing number and the actual manufacturer's part number are listed in the Numerical Index. The specification control drawing number references the original manufacturer's part number by the notation [See.....(original manufacturer's part number)]. The original manufacturer's part number then gives all pertinent information under appropriate column headings. Both numbers are listed in their proper alphanumerical order within the Numerical Index.

b. The PART NUMBER column arrangement begins at the extreme left-hand position of the part number and continues from left to right one digit at a time, until all parts are arranged in sequence. Alphabetical (O's) are considered as numerical zeros (0's), except when they are combined with other letters to spell a word within a part number. The order of precedence in beginning the part number arrangement at the extreme left-hand (first) digit of the part number is letters A through Z and then numerals 0 through 9. The order of precedence in continuing the part number arrangement at the second and succeeding positions of the part number from left to right is as follows:

(a) Space (blank column)
(b) Diagonal (slant) /
(c) Point (period) .
(d) Dash (-)
(e) Letters A through Z
(f) Numerals 0 through 9

c. Figure and Index Number. The second column of the Numerical Index contains the number of the figure in which the part appears, and its appropriate index number. An unindexed subassembly or detail part in the Maintenance Parts List is listed in the Numerical Index with the index number of the item immediately preceding it in the Maintenance Parts List. The location of these unindexed items are listed in the FIGURE AND INDEX NO. column preceded with an F which denotes "follows". For example, the entry F3-12 in the FIGURE AND INDEX NO. column indicates that the part number appears in figure 3 of the Maintenance Parts List and it follows index 12 in the accompanying parts list.

d. Quantity Per End Item. The third column of the Numerical Index contains the total quantity of each part used in the end item. When in lieu of a quantity, the abbreviation REF appears, one of two possible conditions is implied: (1) that the part is an alternate for another part listed in the Maintenance Parts List at the same figure and index number location, or (2) that the part has a second listing which specifies the quantity in both the Numerical Index and the Maintenance Parts List. The abbreviation AR in this column signifies "As Required" when no definite quantity can be shown.

e. Source, Maintenance, and Recoverability Code. The Source, Maintenance, and Recoverability (SMR) codes appearing in the last column of the Numerical Index are the same as those given in the Maintenance Parts List. They are repeated in the Numerical Index for convenience of the IPB user.

7-4. REFERENCE DESIGNATION INDEX. The Reference Designation Index contains an alphanumerical listing of all items assigned electrical and electronic reference designations that appear on the end item and in the text and illustrations of other supporting technical manuals for the end item.

a. Reference Designation. All parts assigned reference designations are listed in alphanumerical order of reference designations in the first column. The reference designation assigned to a part is not to be confused with, nor is it a substitute designation for, the part number of the item. The reference designation provides for convenient identification by physical location of identical and nonidentical parts which function within the end item circuits. The reference designation also identifies each part on schematic and wiring diagrams, which are included in other technical manuals supporting the end item.

b. Figure and Index Number. The second column of the Reference Designation Index contains the figure and index number assigned to reference designated items listed in the Maintenance Parts List.

7-5. ABBREVIATIONS. Abbreviations used in this Illustrated Parts Breakdown are for the most part in accordance with MIL-STD-12. A list of the abbreviations used and their definitions is given below.

AP	Attaching Parts	No.	Number
AR	As Required	REF	Reference
DWG	Drawing	SPEC	Specification
NHA	Next Higher Assembly		

VENDORS' CODES

CODE	VENDOR'S NAME AND ADDRESS
05820	WAKEFIELD ENGINEERING, INC. AUDUBON RD. WAKEFIELD, MASS. 01880
06540	AMATOM ELECTRONIC HARDWARE DIV. OF MITE CORP. 446 BLAKE ST. NEW HAVEN,CONN. 06515
07047	THE ROSS MILTON CO. 511 2ND ST PIKE SOUTHAMPTON, PA. 18966
07263	FAIRCHILD SEMICONDUCTOR A DIV OF FAIRCHILD CAMERA AND INSTRUMENT CORP 464 ELLIS ST. MOUNTAIN VIEW, CALIF. 94042
08289	BLINN DELBERT CO., INC. 1678 E. MISSION BLVD P.O. BOX 2007 PAMONA, CALIF. 91766
08524	DEUTSCH FASTENER CORP. P.O. BOX 92925 WEST IMPERIAL HWY LOS ANGELES, CALIF. 90045
08730	VEMALINE PRODUCTS CO., INC. P.O. BOX 3 455 W MAIN ST WYCKOFF, N.J. 07481
09353	C AND K COMPONENTS, INC. 103 MORSE ST. WATERTOWN,MASS. 02172
12615	U. S. TERMINALS INC. 7504 CAMARGO ROAD CINCINNATI, OH. 45243
13103	THERMALLOY CO. P.O. BOX 34829 2021 W VALLEY VIEW LANE DALLAS, TEX. 75234
14844	FREQUENCY ELECTRONICS INC. 3 DELAWARE DR. NEW HYDE PARK, N.Y. 11040
15057	GULTON INDUSTRIES INC. MEASUREMENT AND CONTROLS DIV. GULTON INDUSTRIAL PARK EAST GREENWICH, R.I. 02818
15849	LITTON SYSTEMS, INC. USECO DIV 13536 SATICOY AVE VAN NUYS,CALIF. 91409 (USED CODE 88245)
18323	WESTINGHOUSE ELECTRIC CORP. ELECTRONIC SYSTEMS SUPPORT DIV-ILS 1111 SCHILLING RD. HUNT VALLEY,MD. 21030
20093	ELECTRICAL INDUSTRIES DIV. OF PHILIPS ELECTRONICS AND PHARMACEUTICAL INDUSTRIES, INC. 693 CENTRAL AVE. MURRAY HILL, N.J. 07974
22526	DERG ELECTRONICS INC. YOUK EXPRESSWAY NEW CUMBERLAND, PA. 17070
22599	ESNA DIV. OF AMERACE CORP. 16150 STAGG ST. VAN NUYS, CA. 91406
46384	PENN ENGINEERING AND MFG. CORP. BOX 311 DOYLESTOWN,PA. 18901
71002	BIRNBACK CO.,INC. 177 HANSE AVE FREEPORT,LONG ISLAND,N.Y. 11520
71279	CAMBRIDGE THERMIONIC CORP. 445 CONCORD AVE. CAMBRIDGE, MASS. 02138
71468	ITT CANNON ELECTRIC 666 E DYER RD SANTA ANA, CALIF. 92702
76385	MINOR RUBBER CO., INC. 49 ACKERMAN ST BLOOMFIELD N.J. 07003
79963	ZIERICK MFG. CO. RADIO CIRCLE MT. KISCO, N.Y. 10549
80294	BOURNS, INC. INSTRUMENT DIVISION 6135 MAGNOLIA AVE. RIVERSIDE, CALIF. 92506
81349	MILITARY SPECIFICATIONS
82389	SWITCHCRAFT INC. 5555 N ELSTON AVE CHICAGO,ILL 60630
83330	HERMAN H SMITH, INC. 812 SNEDIKER AVE. BROOKLYN, N.Y. 11207
88044	AERONAUTICAL STANDARDS GROUP DEPT. OF NAVY AND AIR FORCE
91637	DALE ELECTRONICS, INC. P.O. BOX 609 COLUMBUS, NEBR. 68601
95987	WECKESSER CO.,INC. 4444 WEST PARK RD CHICAGO, ILL. 60641
96906	MILITARY STANDARDS

VENDORS' CODES (Continued)

CODE	VENDOR'S NAME AND ADDRESS	CODE	VENDOR'S NAME AND ADDRESS
97942	WESTINGHOUSE ELECTRIC CORP. DEFENSE SYSTEMS AND TECHNOLOGY DIVISIONS P.O. BOX 746, MS-7740 BALTIMORE-WASHINGTON INTL. AIRPORT BALTIMORE, MD. 21203		
98291	SEALECTRO CORP. 225 HOYT MAMARONECK, N.Y. 10544		

HOW TO USE THE ILLUSTRATED PARTS BREAKDOWN

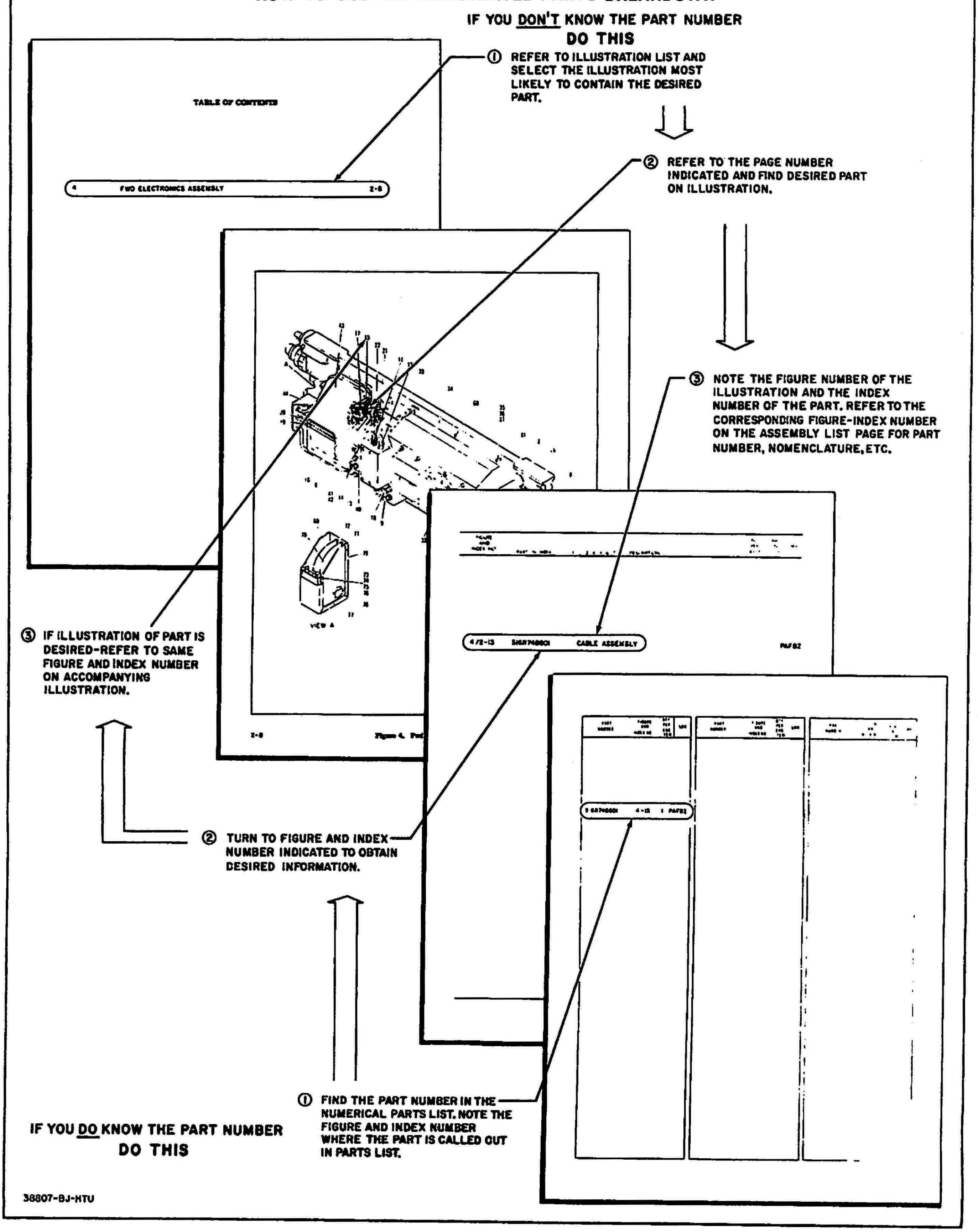

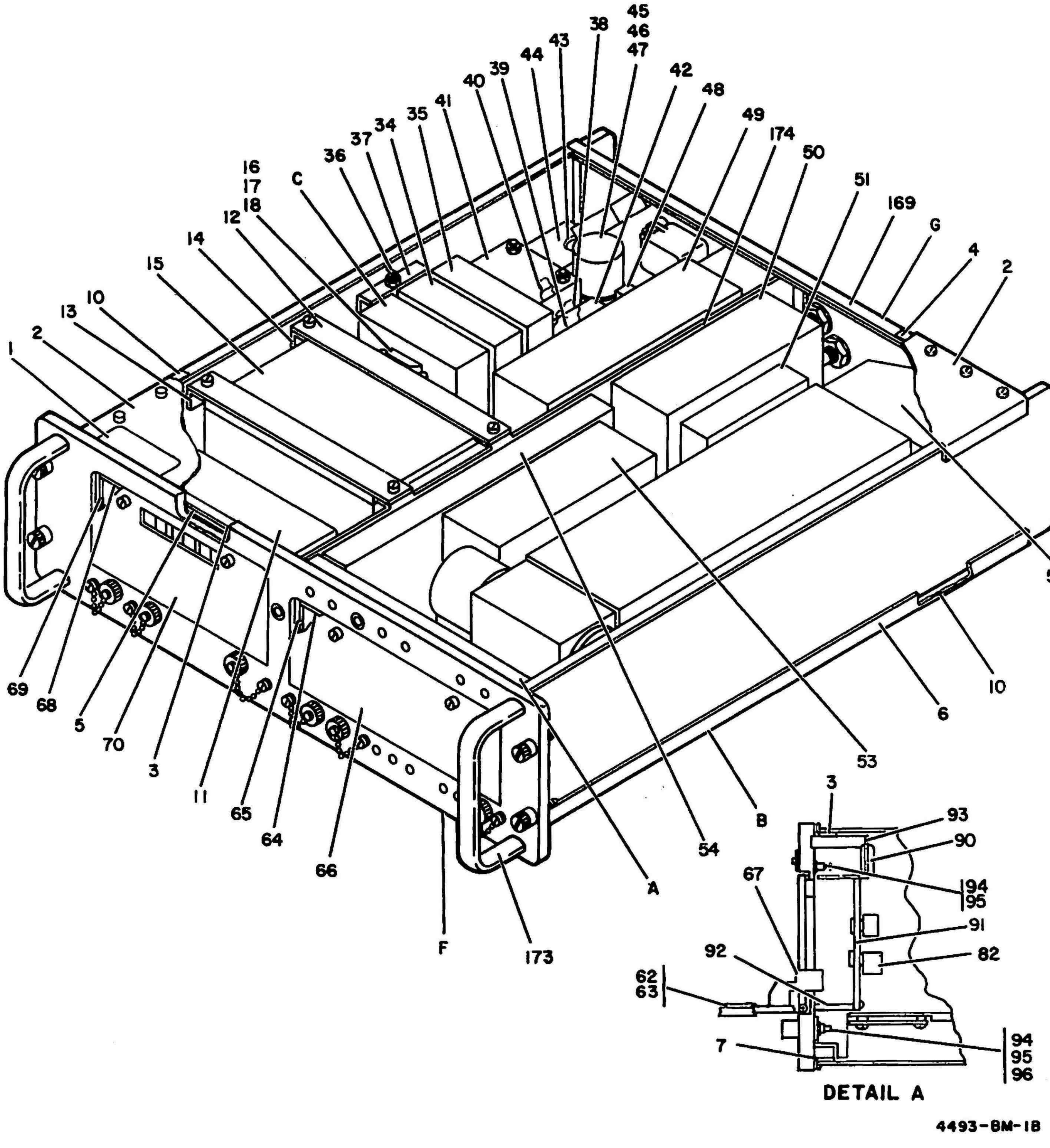

Figure 7-1. Master Regulating Clock TD-1251/U (Sheet 1 of 5)

SECTION II
MAINTENANCE PARTS LIST

FIGURE AND INDEX NO.	PART NUMBER	FSCM	DESCRIPTION 1 2 3 4 5 6 7	UNITS PER ASSY	USABLE ON CODE	SMR
1 -	21750-6200	14844	MASTER REGULATING CLOCK TD-1251/U	1		
1 /1 -1	21792-6200	14844	. PLATE, INSTRUCTION	1		
1 /1 -2	21763-6200	14844	. COVER, TOP	1		
1 /1 -3	21769-6200-1	14844	. GASKET, RF, CHASSIS, TOP, FRONT	1		
1 /1 -4	21769-6200-4	14844	. GASKET, RF, TOP, REAR	1		
1 /1 -5	21896-6200	14844	. BAR, FRONT, TOP	1		
	MS51959-30	96906	. SCREW (AP)	3		
1 /1 -6	21764-6200	14844	. COVER, BOTTOM	1		
1 /1 -7	21769-6200-2	14844	. GASKET, RF, CHASSIS, BOTTOM, FRONT	1		
1 /2 -8	21769-6200-5	14844	. GASKET, RF, BOTTOM, REAR	1		
1 /2 -9	21897-6200	14844	. BAR, BOTTOM, FRONT	1		
	MS51959-30	96906	. SCREW (AP)	4		
1 /1 -10	21769-6200-3	14844	. GASKET, RF, CHASSIS, SIDE	4		
1 /1 -11	22000-6209	14844	. MODULE ASSEMBLY, REAL TIME-OF-DAY CLOCK . . (SEE FIGURE 2 FOR BREAKDOWN)	1		
1 /1 -12	21903-6200	14844	. STRAP, BATTERY	2		
	MS51958-6	96906	. SCREW (AP)	4		
1 /1 -13	21727-6200-1	14844	. BRACKET, CORNER, BATTERY, RIGHT HAND . . .	2		
	MS51958-6	96906	. SCREW (AP)	4		
1 /1 -14	21727-6200-2	14844	. BRACKET, CORNER, BATTERY, LEFT HAND	2		
	MS51958-6	96906	. SCREW (AP)	4		
1 /1 -15	22470-6217	14844	. POWER SUPPLY, +28 VDC BATTERY (SEE FIGURE 5 FOR BREAKDOWN)	1		
1 /1 -16	D20419-16	71468	. SCREW LOCK ASSEMBLY, MALE	2		
1 /1 -17	M24308-21-2	81349	. BACKSHELL	1		
1 /1 -18	M24308-1-2	81349	. CONNECTOR	1		
	22140-6214	14844	. BATTERY CHARGER AND CROSSOVER MODULE . . .	1		
1 /3 -19	22422-6214-2	14844	. . COVER	1		
1 /3 -20	MS51959-11	96906	. . SCREW (AP)	4		
1 /3 -21	MS51957-12	96906	. . SCREW (AP)	4		
	MS35338-78	96906	. . WASHER (AP)	4		
1 /3 -22	22141-6214	14844	. . BOARD ASSEMBLY, BATTERY CHARGER (SEE . . FIGURE 6 FOR BREAKDOWN)	1		
1 /3 -23	22142-6214	14844	. . BOARD ASSEMBLY, BATTERY CROSSOVER (SEE . FIGURE 7 FOR BREAKDOWN)	1		
	MS35649-244	96906	. . NUT (AP)	8		
	MS35338-78	96906	. . WASHER (AP)	8		
1 /3 -24	21757STD	14844	. . STUD, DOUBLE ENDED	4		
1 /3 -25	22113STD	14844	. . STANDOFF	4		
1 /3 -26	M24308-3-3	81349	. . CONNECTOR	1		
	MS51957-15	96906	. . SCREW (AP)	2		
	MS35338-78	96906	. . WASHER (AP)	2		
	MS15795-304	96906	. . WASHER (AP)	2		
1 /3 -27	JANTX2N5664	81349	. . TRANSISTOR	1		
1 /3 -28	MS51957-15	96906	. . SCREW (AP)	1		
1 /3 -29	MS51957-14	96906	. . SCREW (AP)	1		
	MS15795-304	96906	. . WASHER (AP)	2		
	MS35338-78	96906	. . WASHER (AP)	2		
	MS35649-244	96906	. . NUT (AP)	1		
1 /3 -30	2630-14020T093	06540	. . WASHER, SHOULDERED, NO. 2	2		
1 /3 -31	341	79963	. . LUG, GROUND, NO. 2	1		
1 /3 -32	4066	13103	. . HEAT SINK	1		
1 /3 -33	22422-6241-1	14844	. . CHASSIS	1		
1 /1 -34	22120-6213	14844	. MODULE ASSEMBLY, DC TO DC CONVERTER (SEE . FIGURE 8 FOR BREAKDOWN)	1		
1 /1 -35	22100-6212	14844	. MODULE ASSEMBLY, SWITCHING REGULATOR, +18 . VDC (SEE FIGURE 10 FOR BREAKDOWN)	1		

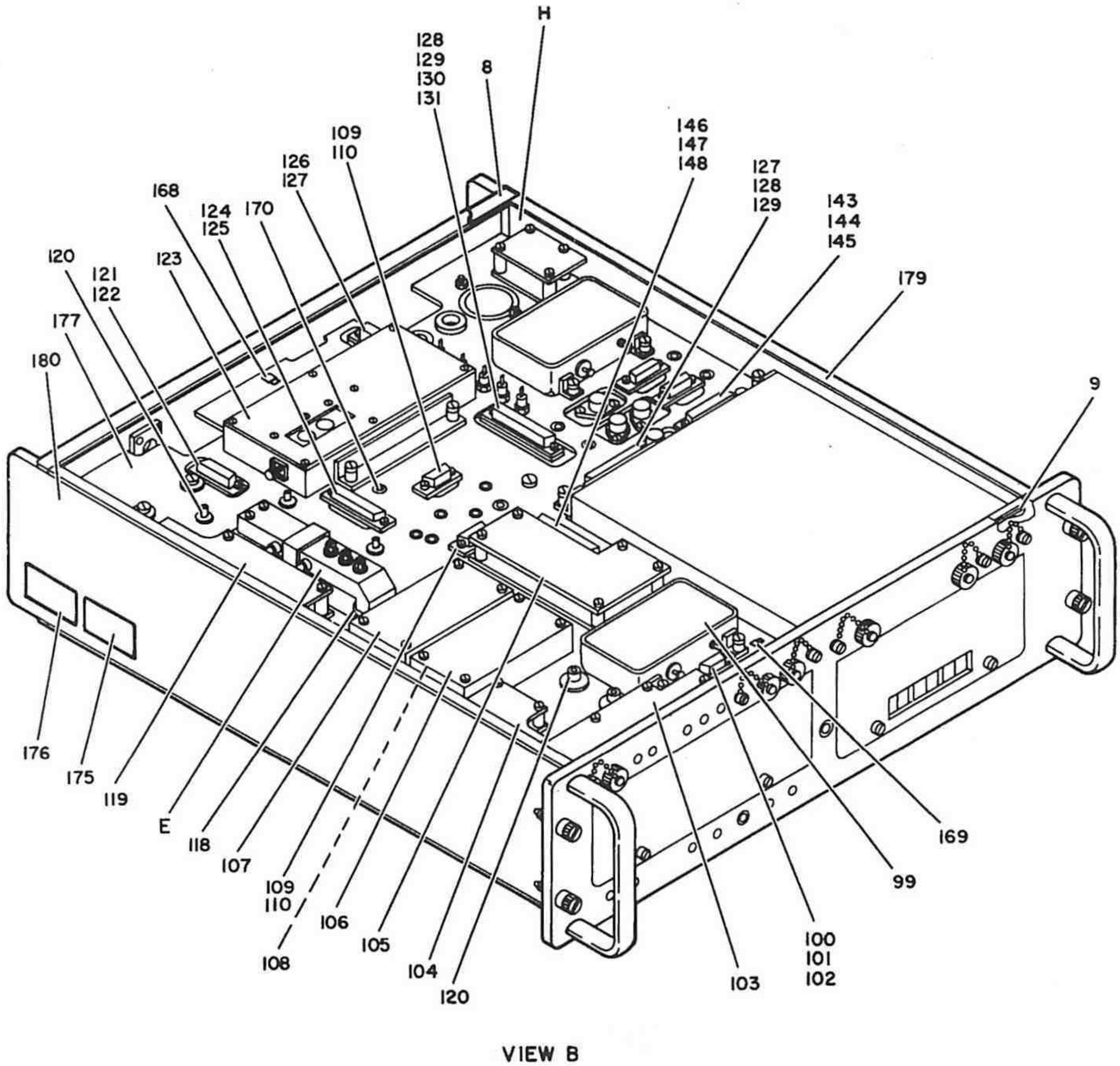

4493-BM-2B

Figure 7-1. Master Regulating Clock TD-1251/U (Sheet 2 of 5)

FIGURE AND INDEX NO.	PART NUMBER	FSCM	DESCRIPTION 1 2 3 4 5 6 7	UNITS PER ASSY	USABLE ON CODE	SMR
1 /1 -36	22721-6200-1	14844	. SWITCH, TOGGLE, SPDT, LOCK LEVER	1		
1 /1 -37	21539-6200	14844	. BRACKET	1		
	MS51957-14	96906	. SCREW (AP)	2		
1 /1 -38	21807-6200	14844	. INSULATOR, DIODE	1		
	MS51957-3	96906	. SCREW (AP)	2		
	MS21045-04	96906	. NUT (AP)	2		
1 /1 -39	CXR06BX104KR	81349	. CAPACITOR	1		
1 /1 -40	22786-6200	14844	. VARISTOR	1		
1 /1 -41	22083-6211	14844	. TRANSFORMER, POWER	1		
	MS51957-45	96906	. SCREW (AP)	2		
	MS21045-08	96906	. NUT (AP)	4		
1 /1 -42	22082-6211	14844	. INDUCTOR, 40 MH	1		
	MS21045-08	96906	. NUT (AP)	4		
1 /1 -43	JANTX1N4148	81349	. SEMICONDUCTOR DEVICE, DIODE	1		
1 /1 -44	22081-6211	14844	. INDUCTOR, 5 MH	1		
	MS21045-08	96906	. NUT (AP)	2		
1 /1 -45	22742-6200-1	14844	. CAPACITOR, POLYCARBON, 2800 UF, 75 WVDC . .	1		
	MS51957-30	96906	. SCREW (AP)	3		
	MS21045-06	96906	. NUT (AP)	3		
1 /1 -46	22742-6200-2	14844	. . CLIP, MOUNTING	1		
1 /1 -47	1486-1	83330	. TERMINAL, LUG	1		
1 /1 -48	M5757-13-56	81349	. RELAY	1		
	MS51957-4	96906	. SCREW (AP)	2		
1 /1 -49	21930-6207	14844	. SYNTHESIZER ASSEMBLY (SEE FIGURE 12 FOR . . BREAKDOWN)	1		
1 /1 -50	21830-6204	14844	. OSCILLATOR MODULE	1		
1 /1 -51	22040-6210	14844	. MODULE ASSEMBLY, GENERATOR, 1 MHZ, 3 MHZ . . (SEE FIGURE 16 FOR BREAKDOWN)	1		
1 /1 -52	21770-6201-1	14844	. RESONATOR ASSEMBLY, CESUIM BEAM	1		
1 /1 -53	21970-6208	14844	. OSCILLATOR MODULE, SECONDARY, 5 MHZ	1		
1 /1 -54	21800-6203	14844	. MODULE ASSEMBLY, PRIMARY LOOP (SEE FIGURE . 18 FOR BREAKDOWN)	1		
1 /4 -55	RLR07C473JR	81349	. RESISTOR	1		
1 /4 -56	RCR076155KS	81349	. RESISTOR	1		
1 /4 -57	RCR076184KS	81349	. RESISTOR	1		
1 /4 -58	RCR076225KS	81349	. RESISTOR	1		
1 /4 -59	RLR07C223JR	81349	. RESISTOR	1		
1 /4 -60	CXR06BX332KR	81349	. CAPACITOR	1		
1 /4 -61	JANTX1N4148	81349	. SEMICONDUCTOR DEVICE, DIODE	1		
1 /1 -62	21793-6200-1	14844	. PLATE, INSTRUCTION	1		
1 /1 -63	21793-6200-2	14844	. PLATE, INSTRUCTION	1		
1 /1 -64	21729-6200-3	14844	. GASKET, RF	2		
1 /1 -65	21729-6200-4	14844	. GASKET, RF	2		
1 /1 -66	21728-6200-1	14844	. DOOR, PANEL, FRONT, INSTRUMENT	1		
	MS51959-13	81349	. SCREW (AP)	2		
1 /1 -67	21728-6200-2	14844	. STOP, DOOR, INSTRUMENT	1		
	MS51959-4	81349	. SCREW (AP)	2		
1 /1 -68	21729-6200-1	14844	. GASKET, RF	2		
1 /1 -69	21729-6200-2	14844	. GASKET, RF	2		
1 /1 -70	21755-6200-1	14844	. DOOR, PANEL, FRONT, TIME OF DAY CLOCK . . .	1		
	MS51959-13	96906	. SCREW (AP)	2		
1 /4 -71	21755-6200-2	14844	. STOP, DOOR, CLOCK	1		
	MS51959-13	96906	. SCREW (AP)	2		
1 /4 -72	21733-6200	14844	. SADDLE, DOOR PIVOT	4		
1 /4 -73	JANTX1N6094	81349	. SEMICONDUCTOR DEVICE, DIODE	7		
1 /4 -74	JANTX1N6092	81349	. SEMICONDUCTOR DEVICE, DIODE	2		
1 /4 -75	JANTX1N6093	81349	. SEMICONDUCTOR DEVICE, DIODE	2		
1 /4 -76	21906-6200	14844	. SHIM, 0.016 THICK	7		
1 /4 -77	22747-6200	14844	. SWITCH, PUSHBUTTON	1		
1 /4 -78	4826-1	71279	. TERMINAL, STANDOFF	1		
1 /4 -79	MR13P5H5DCUAR	81349	. METER	1		
1 /4 -80	TR2A	82389	. CONNECTOR	1		
1 /4 -81	22721-6200-2	14844	. SWITCH, TOGGLE, SPDT, LOCK LEVER	1		
1 /4 -82	RJR24FW203M	81349	. RESISTOR	1		
1 /4 -83	MS91528-1N2B	96906	. KNOB	1		
1 /4 -84	M3786-4-5033	81349	. SWITCH	1		
1 /4 -85	22785-6200	14844	. RESISTOR, VARIABLE, 20K OHMS, 2W	1		

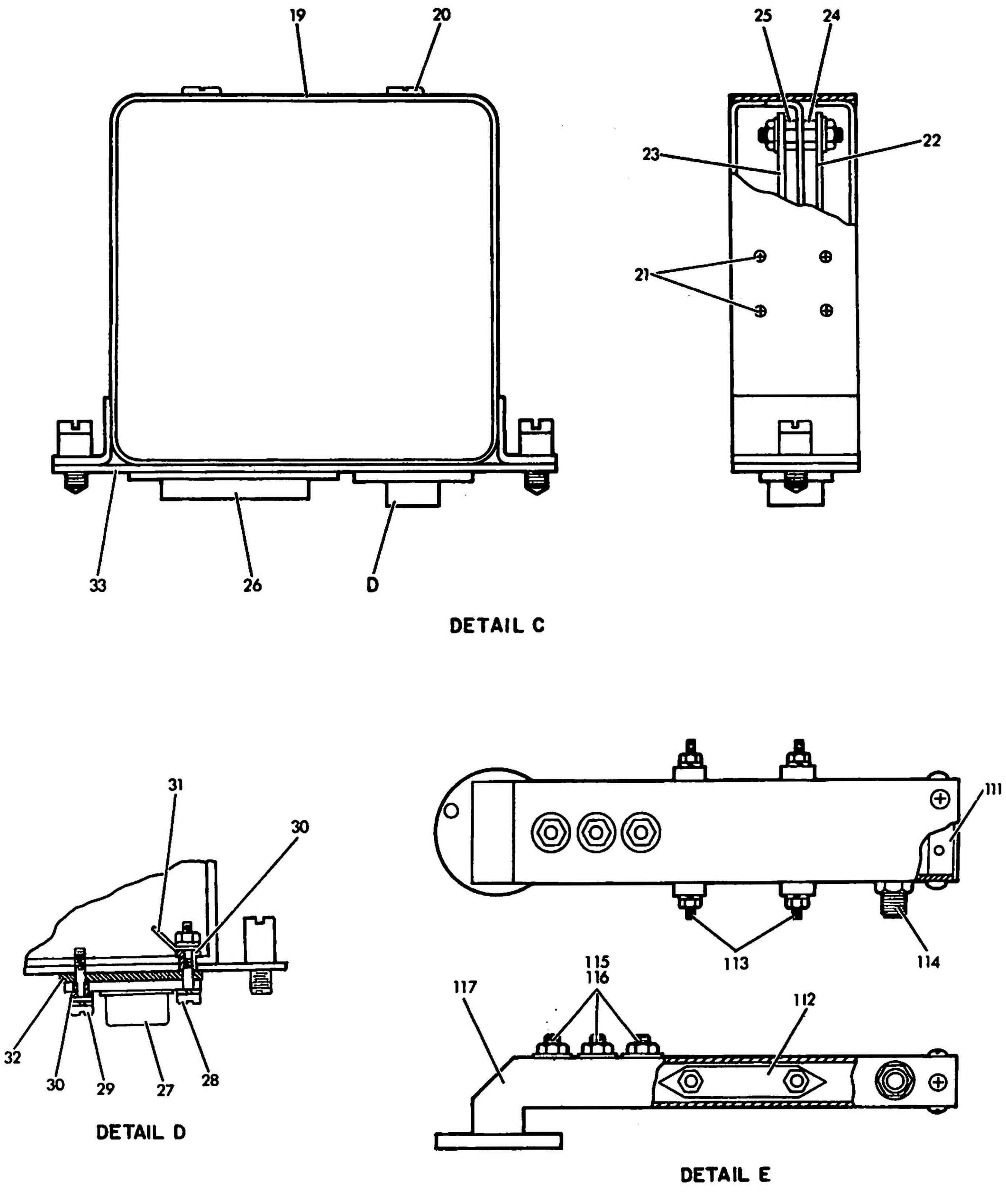

Figure 7-1. Master Regulating Clock TD-1251/U (Sheet 3 of 5)

FIGURE AND INDEX NO.	PART NUMBER	FSCM	DESCRIPTION 1 2 3 4 5 6 7	UNITS PER ASSY	USABLE ON CODE	SMR
1 /4 -86	H492-3	80294	. DIAL	1		
1 /4 -87	22721-6200-3	14844	. SWITCH, TOGGLE, DPDT, LOCK LEVER	1		
1 /4 -88	22721-6200-1	14844	. SWITCH, TOGGLE, SPDT, LOCK LEVER	1		
1 /4 -89	1496	83330	. TERMINAL, LUG	1		
1 /1 -90	2170	83330	. GROMMET	1		
1 /1 -91	21756-6200	14844	. SUBPANEL	1		
	MS51957-3	96906	. SCREW (AP)	8		
1 /1 -92	21771-6200	14844	. BASE, SUBPANEL	1		
	MS51959-3	96906	. SCREW (AP)	4		
1 /1 -93	21766-6200	14844	. SHROUD, SUBPANEL	1		
	MS51957-2	96906	. SCREW (AP)	4		
1 /1 -94	4870-1	71279	. TERMINAL, TURRET	12		
1 /1 -95	341	71002	. TERMINAL, LUG	10		
	MS51957-2	96906	. SCREW (AP)	6		
	MS51957-4	96906	. SCREW (AP)	4		
1 /1 -96	1497	83330	. TERMINAL, LUG	3		
1 /4 -97	UG625BU	81349	. CONNECTOR	3		
1 /4 -98	CW123	22599	. CAP, PROTECTIVE	6		
	MS51957-26	96906	. SCREW (AP)	3		
	MS51957-30	96906	. SCREW (AP)	3		
1 /2 -99	22530-6219	14844	. MODULE ASSEMBLY, SWITCHING REGULATOR, +6 VDC (SEE FIGURE 20 FOR BREAKDOWN)	1		
1 /2 -100	22790-6200-1	14844	. CONNECTOR, COMBINATION	1		
1 /2 -101	22790-6200-11	14844	. CONTACT, COAXIAL, RECEPTACLE, RIGHT ANGLE	2		
1 /2 -102	M24308-26-1	81349	. SCREW LOCK ASSEMBLY, FEMALE	2		
1 /2 -103	22650-6225	14844	. BOARD ASSEMBLY, METER DRIVER (SEE FIGURE 21 FOR BREAKDOWN)	1		
	MS51957-27	96906	. SCREW (AP)	5		
	MS21045-06	96906	. NUT (AP)	5		
1 /2 -104	22610-6223	14844	. BOARD ASSEMBLY, ELECTRON MULTIPLIER (SEE FIGURE 22 FOR BREAKDOWN)	1		
	MS51957-27	96906	. SCREW (AP)	5		
	MS21045-06	96906	. NUT (AP)	5		
1 /2 -105	22670-6226	14844	. BOARD ASSEMBLY, LOGIC, ALARMS (SEE FIGURE 23 FOR BREAKDOWN)	1		
	MS51957-27	96906	. SCREW (AP)	5		
	MS21045-06	96906	. NUT (AP)	5		
1 /2 -106	22571-6221	14844	. POWER SUPPLY, HIGH VOLTAGE, NEGATIVE	1		
1 /2 -107	22572-6222	14844	. POWER SUPPLY, HIGH VOLTAGE, POSITIVE	1		
1 /2 -108	22575-6221	14844	. PLATE, MOUNTING	4		
	AN507C440-16	88044	. SCREW (AP)	8		
1 /2 -109	22790-6200	14844	. CONNECTOR, RECEPTACLE, ELECTRICAL	2		
1 /2 -110	22750-6200-12	14844	. CONTACT, COAXIAL, RECEPTACLE, RIGHT ANGLE	6		
	21900-6206	14844	. WAVEGUIDE ASSEMBLY	1		
	MS21045-04	96906	. NUT (AP)	4		
1 /3 -111	21915-6206-2	14844	. . COVER	1		
	MS51957-2	96906	. . SCREW (AP)	6		
	MS15795-302	96906	. . WASHER (AP)	6		
	MS35338-134	96906	. . WASHER (AP)	6		
1 /3 -112	21914-6206	14844	. . ATTENUATOR	1		
1 /3 -113	AN515C32	88044	. . SCREW (AP)	2		
1 /3 -114	22731-6200-1	14844	. . CONNECTOR, RF, TYPE SMA	1		
	MS51957-1	96906	. . SCREW (AP)	2		
	MS35338-134	96906	. . WASHER (AP)	2		
1 /3 -115	MS51056-24	96906	. . SCREW	3		
1 /3 -116	MS35649-264	96906	. . NUT	3		
1 /3 -117	21915-6206-1	14844	. . HOUSING, WAVEGUIDE	1		
1 /2 -118	21830-6200	14844	. GASKET, WAVEGUIDE	1		
1 /2 -119	22630-6224	14844	. BOARD ASSEMBLY, VACION REGULATOR AND CESIUM BEAM INTERLOCK (SEE FIGURE 24 FOR BREAKDOWN)	1		
	MS51957-27	96906	. SCREW (AP)	4		
	MS21045-06	96906	. NUT (AP)	4		
1 /2 -120	21797-6200	14844	. BUSHING, ECCENTRIC	6		
	MS35338-139	96906	. WASHER (AP)	6		

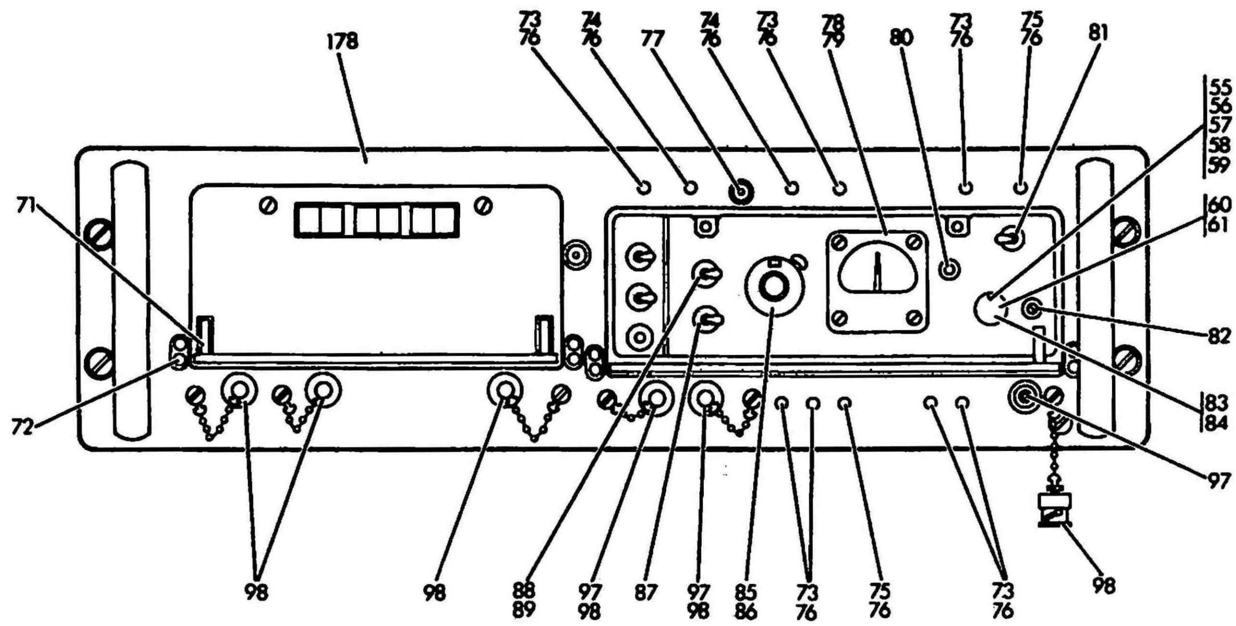

VIEW F

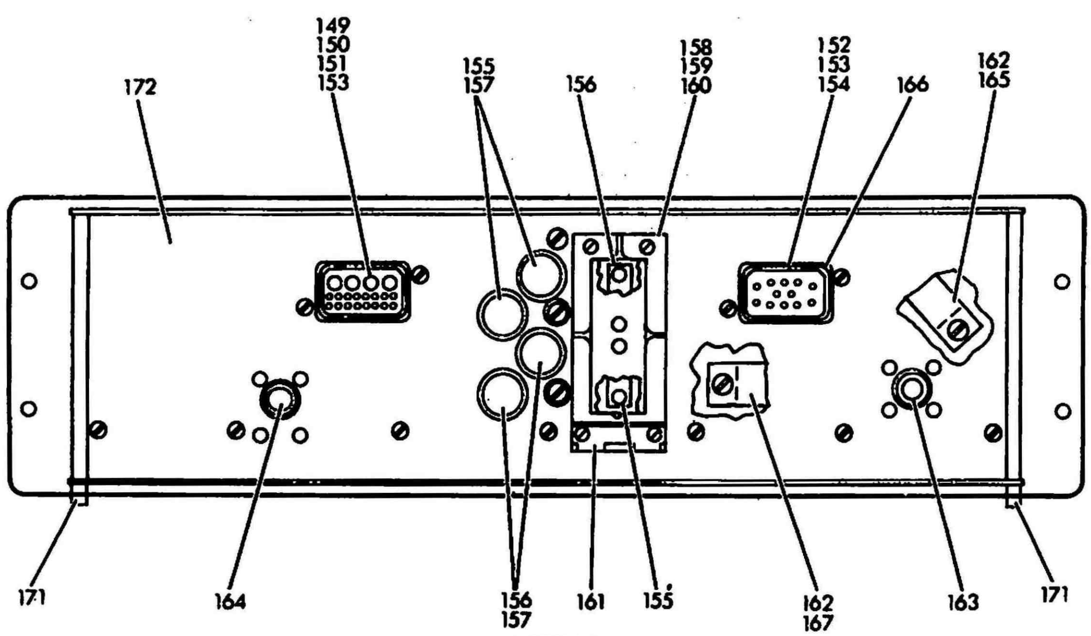

VIEW G

4493-BM-4B

Figure 7-1. Master Regulating Clock TD-1251/U (Sheet 4 of 5)

FIGURE AND INDEX NO.	PART NUMBER	FSCM	DESCRIPTION 1 2 3 4 5 6 7	UNITS PER ASSY	USABLE ON CODE	SMR
1 /2 -121	M24308-1-2	81349	. CONNECTOR	1		
	MS51957-3	96906	. SCREW (AP)	2		
	MS21045-04	96906	. NUT (AP)	2		
1 /2 -122	D20419	71468	. SCREW LOCK ASSEMBLY, MALE	2		
1 /2 -123	21860-6205	14844	. MODULE ASSEMBLY, MULTIPLIER, TIMES 630 (SEE FIGURE 25 FOR BREAKDOWN)	1		
1 /2 -124	22790-6200-2	14844	. CONNECTOR, COMBINATION, FLOAT	1		
1 /2 -125	22790-6200-11	14844	. CONTACT, COAXIAL, RECEPTACLE, RIGHT ANGLE .	4		
1 /2 -126	M24308-1-1	81349	. CONNECTOR	1		
1 /2 -127	D20419	71468	. SCREW LOCK ASSEMBLY, MALE	2		
1 /2 -128	22790-6200-3	14844	. CONNECTOR	1		
1 /2 -129	D20419	71468	. SCREW LOCK ASSEMBLY, MALE	2		
1 /2 -130	DM53743-5076	71468	. CONTACT, COAXIAL, RECEPTACLE, RIGHT ANGLE .	3		
1 /2 -131	DM53743-5073	71468	. CONTACT, COAXIAL, RECEPTACLE, RIGHT ANGLE .	5		
1 /5 -132	2381-1	71279	. TERMINAL, GROUND	5		
1 /5 -133	21791-6200	14844	. INSULATOR	1		
	MS51957-26	96906	. SCREW (AP)	2		
1 /5 -134	1411-6	83330	. TERMINAL, LUG	1		
1 /5 -135	8217SS0632-7	06540	. TERMINAL, STANDOFF	1		
1 /5 -136	CKR06BX105KR	81349	. CAPACITOR	1		
1 /5 -137	22070-6211	14844	. BOARD ASSEMBLY, REGULATOR, POWER SUPPLY . . (SEE FIGURE 29 FOR BREAKDOWN)	1		
	MS51957-27	96906	. SCREW (AP)	4		
	MS21045-06	96906	. NUT (AP)	4		
1 /5 -138	22450-6216	14844	. MODULE ASSEMBLY, SWITCHING REGULATOR, +5 . VDC (SEE FIGURE 20 FOR BREAKDOWN)	1		
1 /5 -139	JANTX1N3893	81349	. SEMICONDUCTOR DEVICE, DIODE	5		
1 /5 -140	2552	83330	. GROMMET	2		
1 /5 -141	M24308-1-13	81349	. CONNECTOR	2		
1 /5 -142	M24308-1-14	81349	. CONNECTOR	1		
1 /2 -143	M24308-1-4	81349	. CONNECTOR	1		
1 /2 -144	D20419-16	71468	. SCREW LOCK ASSEMBLY, MALE	2		
1 /2 -145	M24308-21-4	81349	. BACKSHELL	1		
1 /2 -146	22790-6200-4	14844	. CONNECTOR	1		
1 /2 -147	22790-6200-12	14844	. CONTACT, COAXIAL, RECEPTACLE, RIGHT ANGLE .	1		
1 /2 -148	22790-6200-11	14844	. CONTACT, COAXIAL, RECEPTACLE, RIGHT ANGLE .	1		
1 /4 -149	128C102H06	97942	. CONNECTOR SET, ELECTRICAL	1		
1 /4 -150	031-0905-000	71468	. CONTACT, PIN	20		
1 /4 -151	249-1178-001	71468	. CONTACT, PIN, COAXIAL	4		
1 /4 -152	128C102H02	97942	. CONNECTOR SET, ELECTRICAL	1		
1 /4 -153	031-0944-000	71468	. CONTACT, PIN	12		
1 /4 -154	21808-6200	14844	. SPACER	4		
1 /4 -155	F02B125V4A	81349	. FUSE	2		
1 /4 -156	F02B250V2A	81349	. FUSE	3		
1 /4 -157	FHN2662	81349	. FUSEHOLDER	4		
1 /4 -158	21752-6200	14844	. DOOR, REAR	1		
	PS10-440-40	46384	. SCREW, CAPTIVE	2		
1 /4 -159	21729-6200-5	14844	. GASKET, RF, DOOR, REAR	2		
1 /4 -160	21729-6200-6	14844	. GASKET, RF, DOOR, REAR	2		
1 /4 -161	21753-6200	14844	. HINGE, REAR DOOR	1		
	MS51959-58	96906	. SCREW (AP)	2		
	21748-6200	14844	. SCREW (AP)	2		
1 /4 -162	M15733-05-001	81349	. FILTER	2		
	MS51957-28	96906	. SCREW (AP)	4		
	MS21045-06	96906	. NUT (AP)	4		
1 /4 -163	122B620H01	97942	. BUSHING	1		
1 /4 -164	146C033H01	97942	. BUSHING	1		
1 /4 -165	1485-6	83330	. TERMINAL, LUG	1		
1 /4 -166	21768-6200-1	14844	. CABLE ASSEMBLY, POWER, ACCESSORY	1		
1 /4 -167	772	83330	. CLAMP, CABLE	1		
1 /2 -168	775	83330	. CLAMP, CABLE	1		
	MS51957-29	96906	. SCREW (AP)	1		
1 /2 -169	776	83330	. CLAMP, CABLE	1		
	MS51957-29	96906	. SCREW (AP)	1		
1 /2 -170	Z1015	76385	. GROMMET	3		
1 /4 -171	22787-6200	14844	. PAD, CUSHIONING	2		

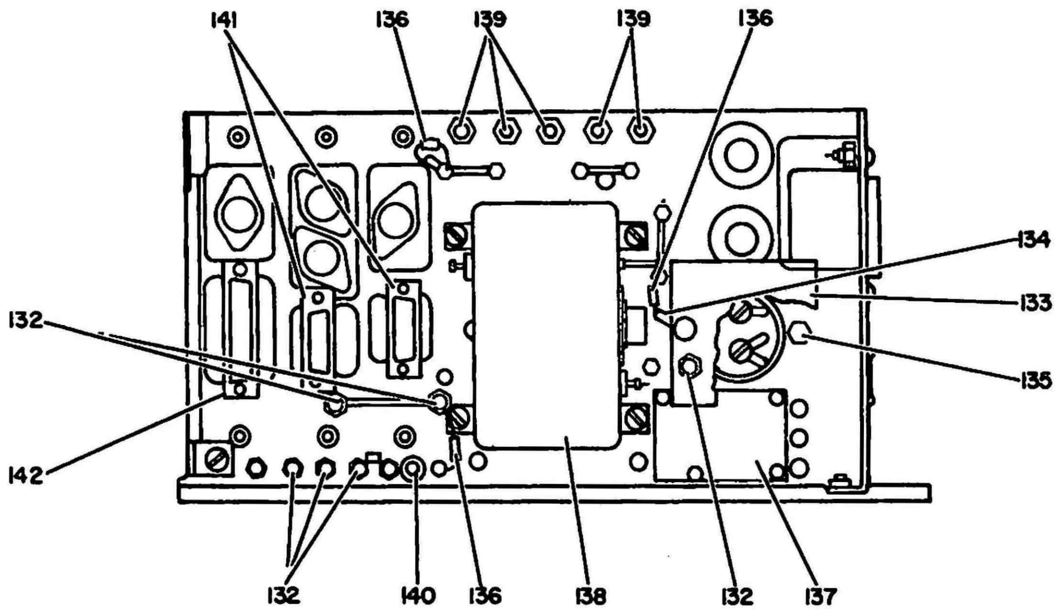

DETAIL H

4493-BM-48A

Figure 7-1. Master Regulating Clock TD-1251/U (Sheet 5 of 5)

FIGURE AND INDEX NO.	PART NUMBER	FSCM	DESCRIPTION 1 2 3 4 5 6 7	UNITS PER ASSY	USABLE ON CODE	SMR
1 /4 -172	21892-6200	14844	. PANEL, REAR	1		
	MS51957-28	96906	. SCREW (AP)	7		
	MS51960-63	96906	. SCREW (AP)	10		
1 /1 -173	0BA14-1-7-8	08730	. HANDLE, BOW	2		
	MS51960-66	96906	. SCREW (AP)	4		
1 /1 -174	21895-6200	14844	. PANEL, CENTER	1		
	MS51958-62	96906	. SCREW (AP)	3		
	MS21045-08	96906	. NUT (AP)	3		
	MS51960-69	96906	. SCREW (AP)	2		
1 /2 -175	21794-6200	14844	. PLATE, IDENTIFICATION	1		
1 /2 -176	21722-6200	14844	. PLATE, IDENTIFICATION	1		
1 /2 -177	21891-6200	14844	. PLATE, MOUNTING	1		
	MS51957-28	96906	. SCREW (AP)	10		
1 /4 -178	21761-6200	14844	. PANEL, FRONT	1		
	MS51959-30	96906	. SCREW (AP)	6		
1 /2 -179	21894-6200	14844	. PANEL, SIDE, RIGHT HAND	1		
1 /2 -180	21893-6200	14844	. PANEL, SIDE, LEFT HAND	1		

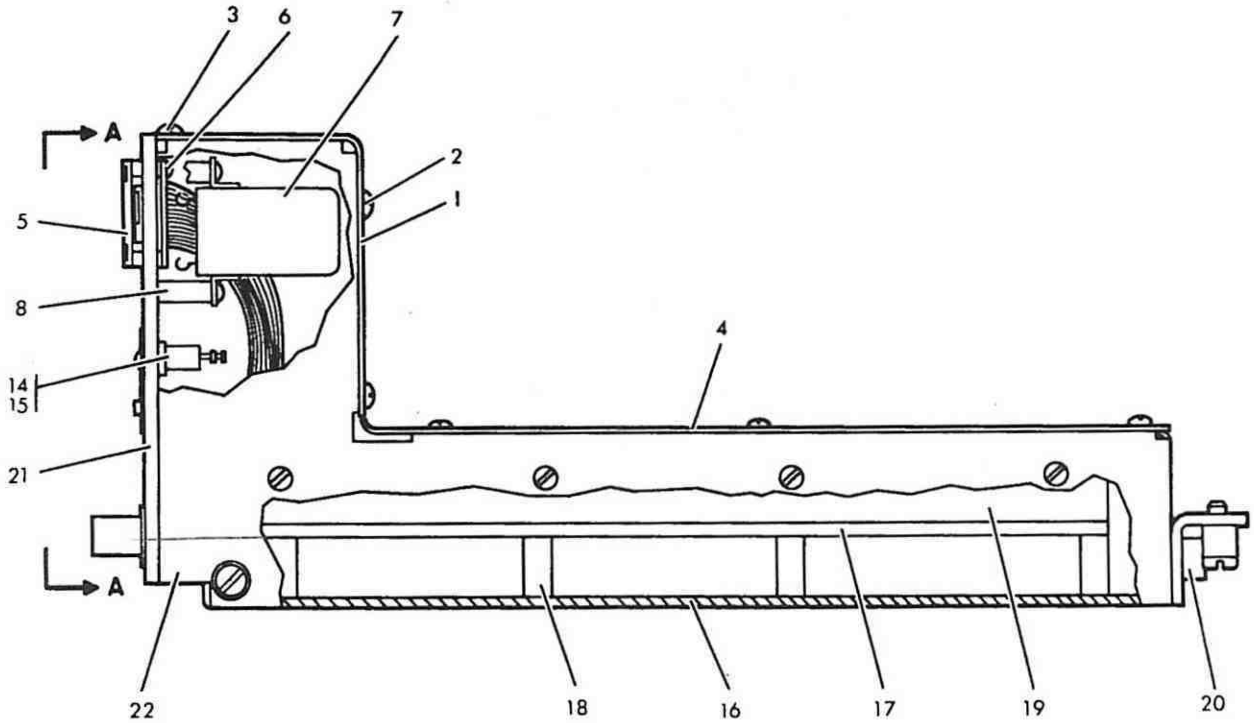

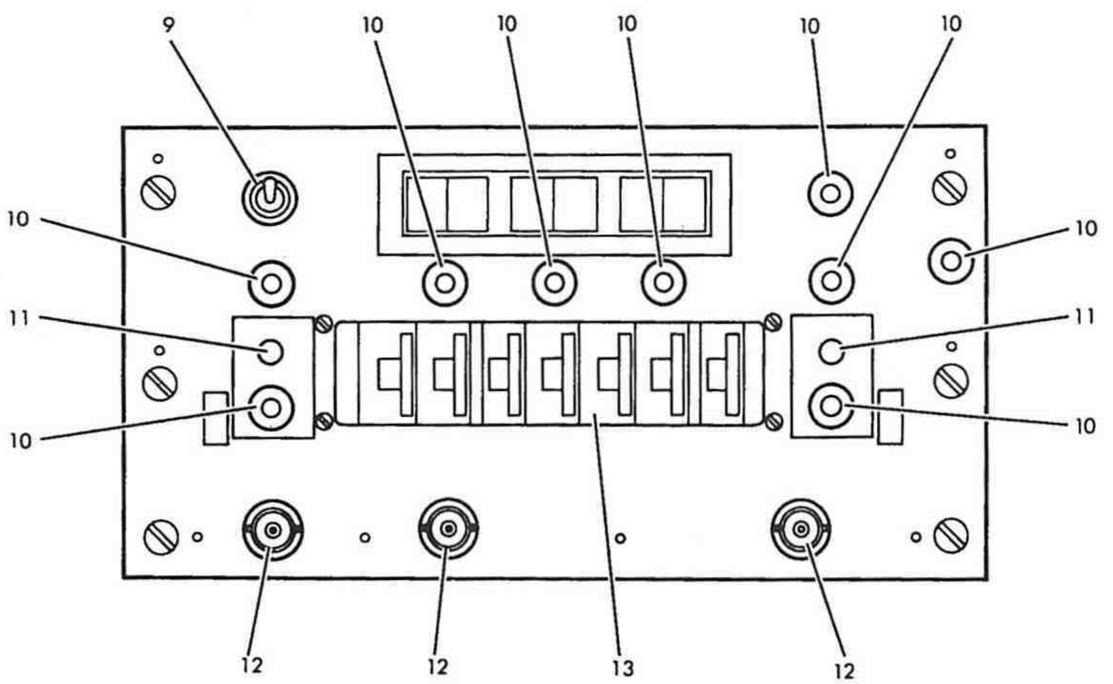

VIEW A-A

4493-BM-20B

Figure 7-2. Real Time-of-Day Clock Module Assembly

FIGURE AND INDEX NO.	PART NUMBER	FSCM	DESCRIPTION 1 2 3 4 5 6 7	UNITS PER ASSY	USABLE ON CODE	SMR
2 -	22000-6209	14844	MODULE ASSEMBLY, REAL TIME-OF-DAY CLOCK (SEE. FIGURE 1 FOR NHA)	REF		
-1	22015-6209-3	14844	. COVER, TOP PANEL	1		
-2	MS51959-14	96906	. SCREW (AP)	2		
-3	MS51957-14	96906	. SCREW (AP)	4		
	MS35338-78	96906	. WASHER (AP)	4		
-4	22015-6209-2	14844	. COVER, TOP	1		
	MS51957-14	96906	. SCREW (AP)	8		
	MS35338-78	96906	. WASHER (AP)	8		
-5	22017-6209-2	14844	. WINDOW, DISPLAY	1		
-6	22001-6209	14844	. BOARD ASSEMBLY, DISPLAY (SEE FIGURE 3 FOR . BREAKDOWN)	1		
	MS51957-2	96906	. SCREW (AP)	4		
	MS35338-77	96906	. WASHER (AP)	4		
-7	M5757-13-56	81349	. RELAY	1		
	MS51957-2	96906	. SCREW (AP)	2		
-8	8106A0256	06540	. STANDOFF	2		
	MS51959-3	96906	. SCREW (AP)	2		
-9	22748-6200	14844	. SWITCH, TOGGLE	1		
-10	22747-6200	14844	. SWITCH, PUSHBUTTON	9		
	7969	09353	. NUT, KNURLED (AP)	1		
-11	JANTX1N6094	81349	. DIODE, LIGHT EMITTING	2		
-12	22774-6200	14844	. CONNECTOR	3		
-13	22735-6200	14844	. SWITCH, THUMB WHEEL	1		
	MS51959-4	96906	. SCREW (AP)	4		
	MS35338-77	96906	. WASHER (AP)	4		
	MS15795-302	96906	. WASHER (AP)	4		
	MS35649-224	96906	. NUT (AP)	4		
-14	4826-1-0516	71279	. TERMINAL, INSULATED	4		
-15	9222A115	06540	. SPACER	4		
-16	22015-6209-4	14844	. COVER, BOTTOM	1		
	MS51959-13	96906	. SCREW (AP)	8		
-17	22002-6209	14844	. BOARD ASSEMBLY, LOGIC (SEE FIGURE 4 FOR . . BREAKDOWN)	1		
	MS51957-14	96906	. SCREW (AP)	6		
	MS35338-78	96906	. WASHER (AP)	6		
-18	8216A0440	06540	. STANDOFF	6		
-19	22015-6209-5	14844	. BRACKET, MOUNTING	2		
	MS51959-13	96906	. SCREW (AP)	8		
-20	M24308-3-4	81349	. CONNECTOR	1		
	M24308-26-1	81349	. SCREW LOCK ASSY, FEMALE (AP)	2		
-21	22016-6209	14844	. PANEL, FRONT	1		
	MS51959-28	96906	. SCREW (AP)	6		
-22	22015-6209-1	14844	. CHASSIS ASSEMBLY	1		

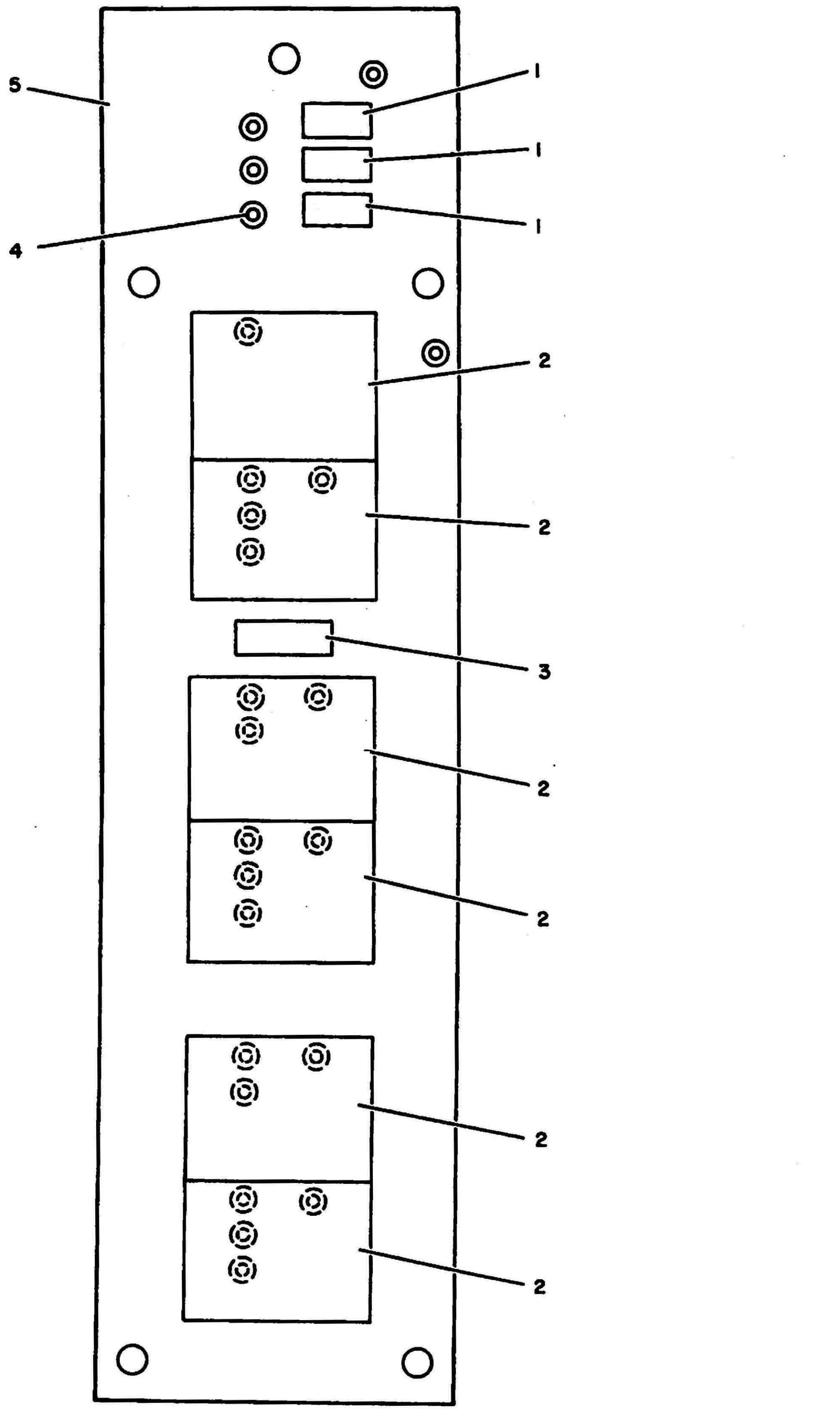

Figure 7-3. Display Board Assembly

FIGURE AND INDEX NO.	PART NUMBER	FSCM	DESCRIPTION 1 2 3 4 5 6 7	UNITS PER ASSY	USABLE ON CODE	SMR
3 -	22001-6209	14844	BOARD ASSEMBLY, DISPLAY (SEE FIGURE 2 FOR . . NHA)	REF		
-1	CKR05BX104KL	81349	. CAPACITOR	3		
-2	22778-6200	14844	. MICROCIRCUIT	6		
-3	RCR056A742KS	81349	. RESISTOR	1		
-4	C7830SCDTSD2	14844	. TERMINAL	24		
-5	22011-6209	14844	. BOARD, PRINTED WIRING	1		

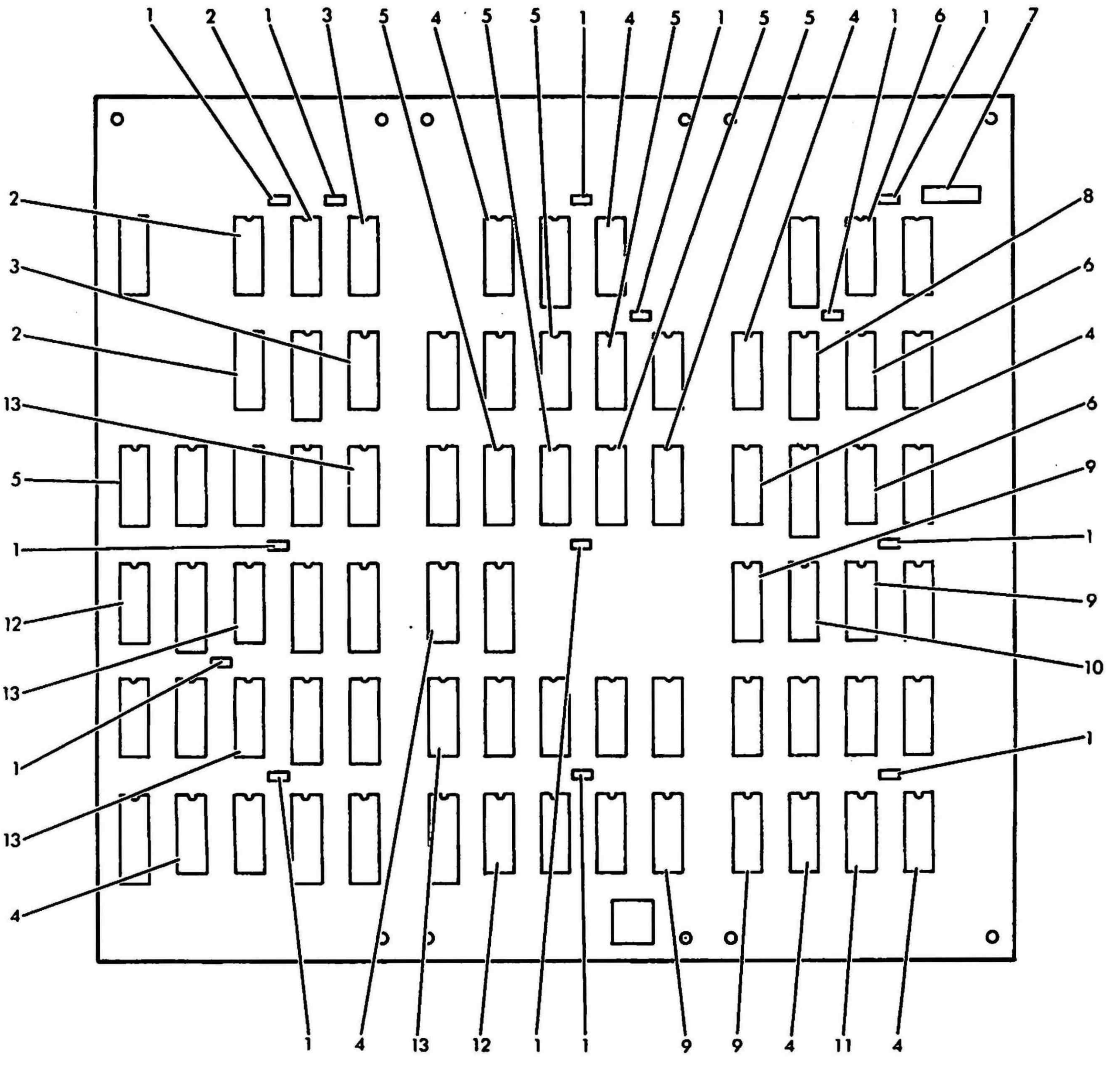

Figure 7-4. Logic Board Assembly (Sheet 1 of 2)

FIGURE AND INDEX NO.	PART NUMBER	FSCM	DESCRIPTION 1 2 3 4 5 6 7	UNITS PER ASSY	USABLE ON CODE	SMR
4 -	22002-6209	14844	BOARD ASSEMBLY, LOGIC (SEE FIGURE 2 FOR NHA).	REF		
4 /1 -1	CKR05BX104KM	81349	. CAPACITOR	13		
4 /1 -2	22701-6200	14844	. MICROCIRCUIT	3		
4 /1 -3	M38510-00105BCB	81349	. MICROCIRCUIT	2		
4 /1 -4	M38510-30102BCB	81349	. MICROCIRCUIT	8		
4 /1 -5	M38510-31501BCB	81349	. MICROCIRCUIT	7		
4 /1 -6	M38510-30004BCB	81349	. MICROCIRCUIT	3		
4 /1 -7	CSR13F685KM	81349	. CAPACITOR	1		
4 /1 -8	55327DM	07263	. MICROCIRCUIT	1		
4 /1 -9	M38510-30009BCB	81349	. MICROCIRCUIT	4		
4 /1 -10	M38510-31302BCB	81349	. MICROCIRCUIT	1		
4 /1 -11	M38510-30301BCB	81349	. MICROCIRCUIT	1		
4 /1 -12	M38510-30005BCB	81349	. MICROCIRCUIT	2		
4 /1 -13	M38510-31004BCB	81349	. MICROCIRCUIT	4		
4 /2 -14	M38510-30003BCB	81349	. MICROCIRCUIT	4		
4 /2 -15	M38510-30001BCB	81349	. MICROCIRCUIT	5		
4 /2 -16	M38510-30107BEB	81349	. MICROCIRCUIT	2		
4 /2 -17	M38510-32001BCB	81349	. MICROCIRCUIT	10		
4 /2 -18	M38510-30110BEB	81349	. MICROCIRCUIT	4		
4 /2 -19	M8340102M4701JB	91637	. RESISTOR NETWORK.	2		
4 /2 -20	22700-6200	14844	. BOARD, PRINTED WIRING	1		
4 /2 -21	M38510-31509BEB	81349	. MICROCIRCUIT	6		
4 /2 -22	M38510-30007BCB	81349	. MICROCIRCUIT	1		
4 /2 -23	CKR06BX105KR	81349	. CAPACITOR	1		
4 /2 -24	22700-6200	14844	. BOARD, PRINTED WIRING	1		

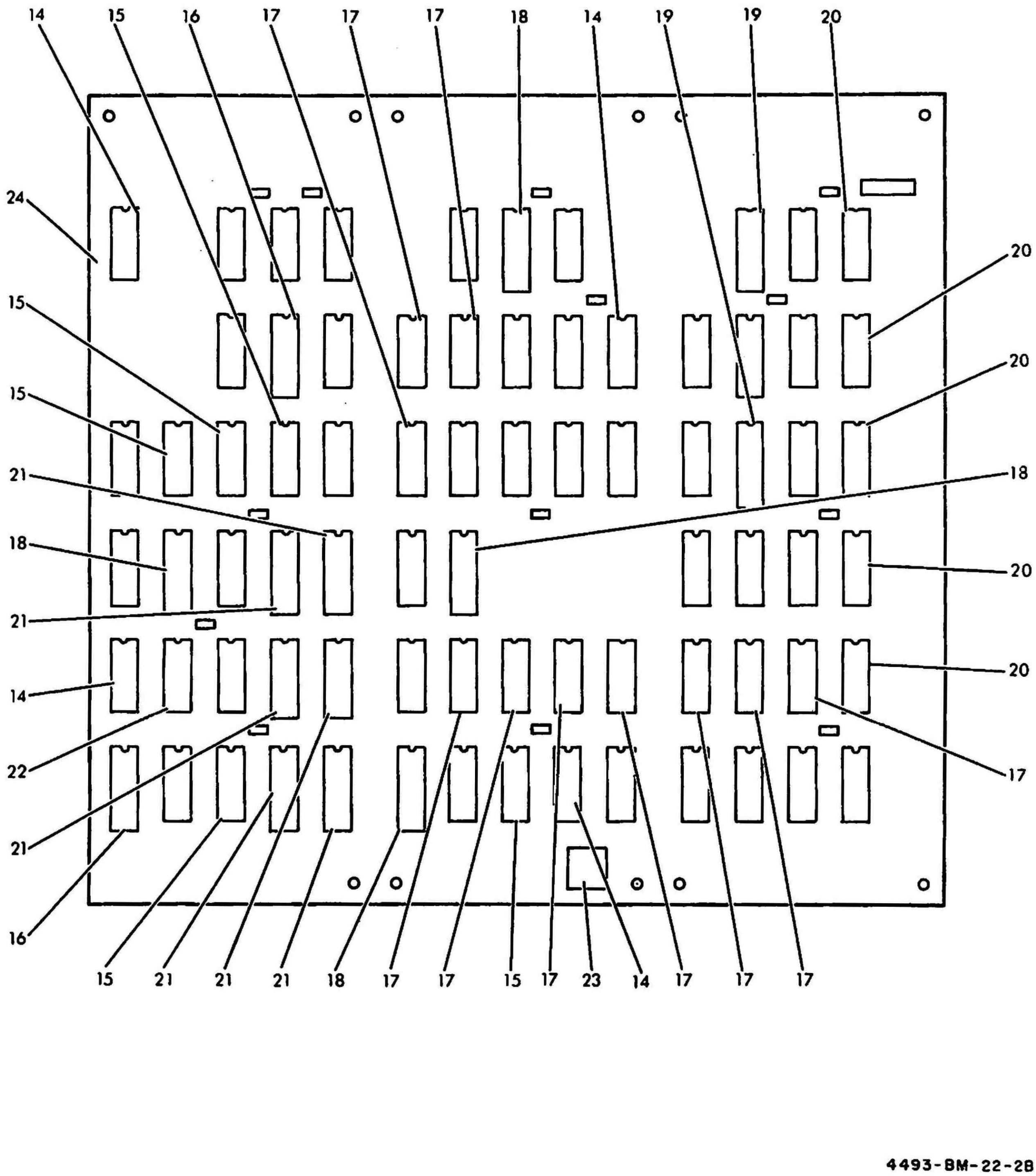

Figure 7-4. Logic Board Assembly (Sheet 2 of 2)

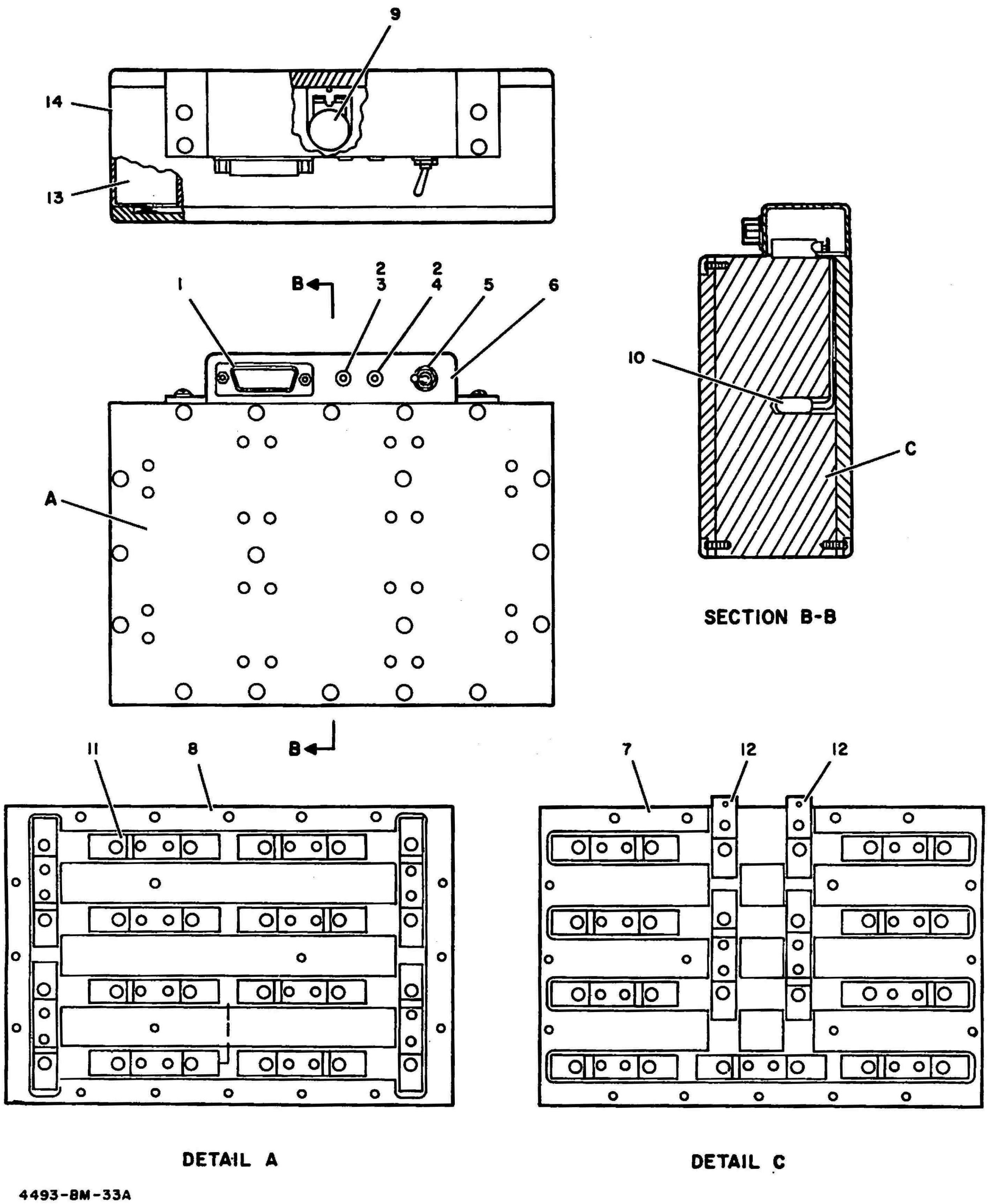

Figure 7-5. +28 VDC Battery Power Supply

FIGURE AND INDEX NO.		PART NUMBER	FSCM	DESCRIPTION 1 2 3 4 5 6 7	UNITS PER ASSY	USABLE ON CODE	SMR
5	-	22470-6217	14844	POWER SUPPLY, +28 VDC BATTERY (SEE FIGURE 1 . FOR NHA)	REF		
	-1	M24308-3-2	71468	. CONNECTOR	1		
		M24308-26-1	81349	. SCREW LOCK ASSEMBLY, FEMALE (AP)	1		
	-2	RLR07C102JA	81349	. RESISTOR	2		
	-3	M39024-5-12	81349	. JACK, TIP	1		
	-4	M39024-5-13	81349	. JACK, TIP	1		
	-5	22721-6200-2	14844	. SWITCH, TOGGLE	1		
	-6	22487-6217	14844	. BRACKET	1		
		MS51957-16	96906	. SCREW (AP)	4		
		MS35338-78	96906	. WASHER (AP)	4		
	-7	22486-6217-2	14844	. COVER, BOTTOM	1		
	-8	22486-6217-1	14844	. COVER, TOP	1		
		MS51957-15	96906	. SCREW (AP)	38		
		MS35338-78	96906	. WASHER (AP)	38		
	-9	22743-6200	14844	. THERMISTOR	1		
		MS51957-12	96906	. SCREW (AP)	2		
		MS35338-78	96906	. WASHER (AP)	2		
	-10	22722-6200	14844	. THERMOSTAT	1		
	-11	22489-6217	14844	. SPRING, DUAL	23		
		SE24	15057	. EYELET (AP)	46		
	-12	22490-6217	14844	. SPRING, INPUT	2		
	-13	21885-6200	14844	. BATTERY C CELL	24		
	-14	22485-6217	14844	. HOUSING	1		

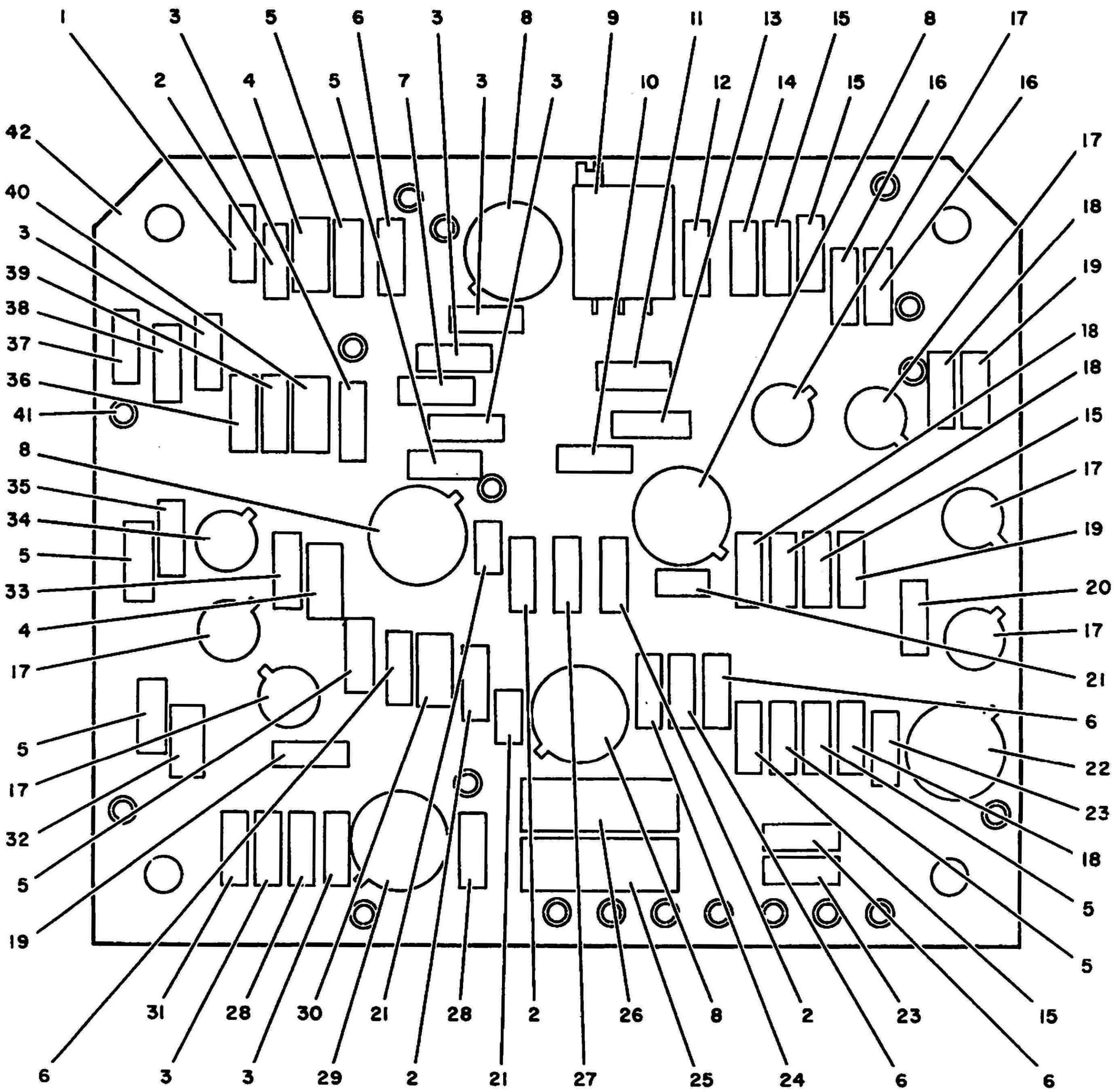

4493-BM-308

Figure 7-6. Battery Charger Board Assembly

FIGURE AND INDEX NO.	PART NUMBER	FSCM	DESCRIPTION 1 2 3 4 5 6 7	UNITS PER ASSY	USABLE ON CODE	SMR
6 -	22141-6214	14844	BOARD ASSEMBLY, BATTERY CHARGER (SEE FIGURE 1 FOR NHA)	REF		
-1	RLR07C682JR	81349	. RESISTOR	1		
-2	RLR07C104JR	81349	. RESISTOR	4		
-3	RLR07C102JR	81349	. RESISTOR	7		
-4	JANTX1N752A	81349	. SEMICONDUCTOR DEVICE, DIODE	2		
-5	JANTX1N4148	81349	. SEMICONDUCTOR DEVICE, DIODE	7		
-6	RLR07C103JR	81349	. RESISTOR	5		
-7	RLR07C123JR	81349	. RESISTOR	1		
-8	JM38510-10101BGB	81349	. MICROCIRCUIT	4		
-9	RJR24FW102P	81349	. RESISTOR	1		
-10	RLR07C332JR	81349	. RESISTOR	1		
-11	RLR07C392JR	81349	. RESISTOR	1		
-12	RLR07C101JR	81349	. RESISTOR (SELECTED)	1		
-13	RLR07C155KS	81349	. RESISTOR	1		
-14	RLR07C473JR	81349	. RESISTOR	1		
-15	RLR07C333JR	81349	. RESISTOR	4		
-16	RLR07C331JR	81349	. RESISTOR	2		
-17	JANTX2N2222A	81349	. TRANSISTOR	6		
-18	RLR07C472JR	81349	. RESISTOR	4		
-19	RLR07C223JR	81349	. RESISTOR	3		
-20	RLR07C330JR	81349	. RESISTOR	1		
-21	CKR05BX103KR	81349	. CAPACITOR	3		
-22	JANTX2N2219A	81349	. TRANSISTOR	1		
-23	JANTX1N5615	81349	. SEMICONDUCTOR DEVICE, DIODE	2		
-24	RLR07C822JR	81349	. RESISTOR (SELECTED)	1		
-25	RWR80S6R81FM	81349	. RESISTOR	1		
-26	RWR89S6810FM	81349	. RESISTOR	1		
-27	RLR07C243JR	81349	. RESISTOR	1		
-28	RLR07C272JR	81349	. RESISTOR	2		
-29	JANTX2N2905A	81349	. TRANSISTOR	1		
-30	JANTX1N970B	81349	. SEMICONDUCTOR DEVICE, DIODE	1		
-31	RLR07C121JR	81349	. RESISTOR	1		
-32	FM04-125V3A	14844	. FUSE	1		
-33	RLR07C153JR	81349	. RESISTOR	1		
-34	JANTX2N2907A	81349	. TRANSISTOR	1		
-35	RLR07C4736P	81349	. RESISTOR	1		
-36	RLR07C182JR	81349	. RESISTOR (SELECTED)	1		
-37	RLR07C***JR	81349	. RESISTOR (SELECTED)	1		
-38	RLR07C392JR	81349	. RESISTOR	1		
-39	JANTX1N968B	81349	. SEMICONDUCTOR DEVICE, DIODE	1		
-40	JANTX1N752A	81349	. SEMICONDUCTOR DEVICE, DIODE	1		
-41	5130STDTSD2	14844	. TERMINAL	19		
-42	22151-6214	14844	. BOARD, PRINTED WIRING	1		

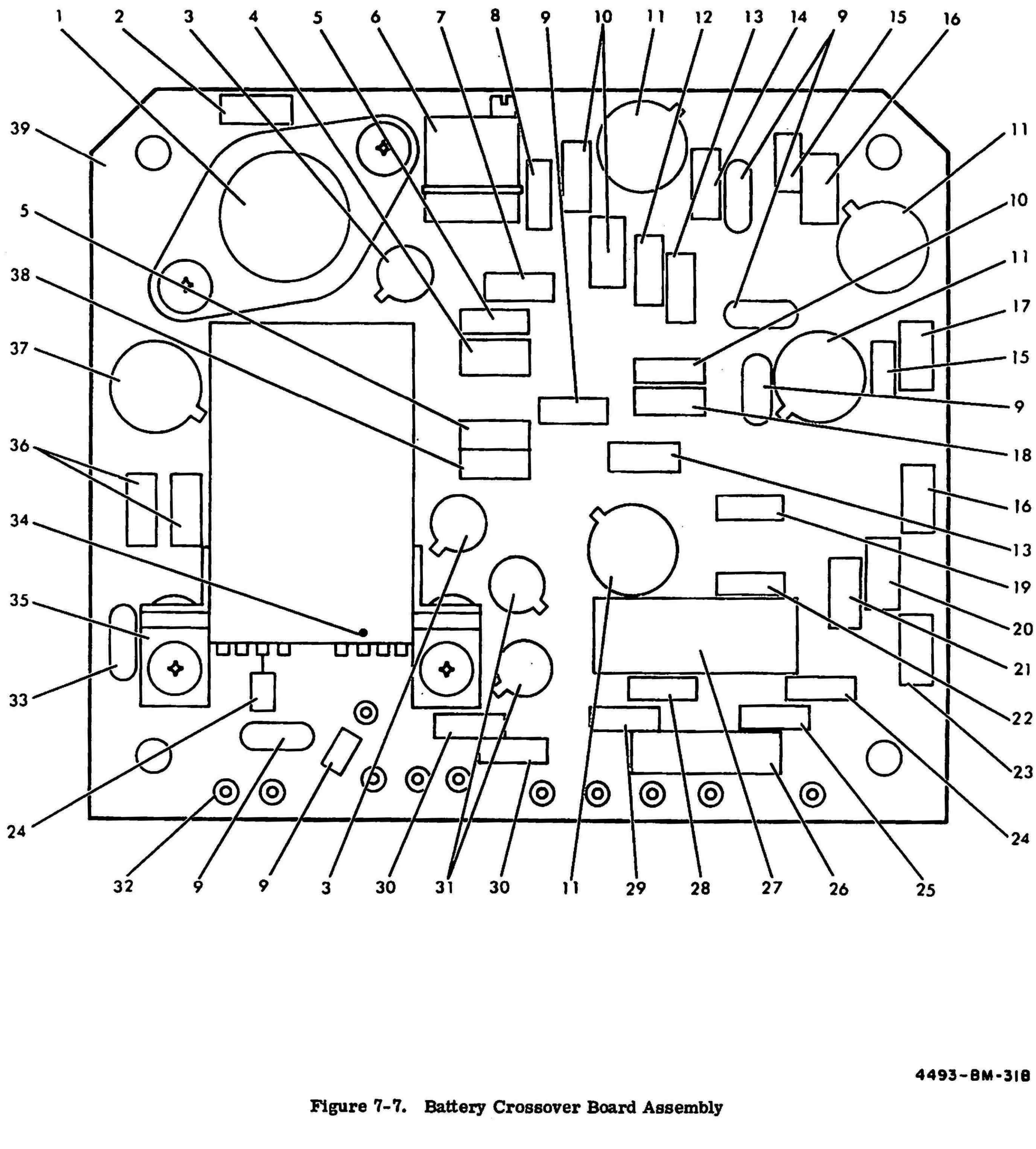

Figure 7-7. Battery Crossover Board Assembly

FIGURE AND INDEX NO.	PART NUMBER	FSCM	DESCRIPTION 1 2 3 4 5 6 7	UNITS PER ASSY	USABLE ON CODE	SMR
7 -	22142-6214	14844	BOARD ASSEMBLY, BATTERY CROSSOVER (SEE FIGURE 1 FOR NHA)	REF		
-1	JANTX2N5664	81349	. TRANSISTOR	1		
	22143-6214	14844	. CAP, INSULATING	1		
	MS51957-15	96906	. SCREW (AP)	2		
	MS35338-78	96906	. WASHER (AP)	2		
	MS15795-304	96906	. WASHER (AP)	2		
	MS35649-244	96906	. NUT (AP)	2		
-2	RNC55H2262FM	81349	. RESISTOR	1		
-3	JANTX2N2907A	81349	. TRANSISTOR	2		
-4	RNC55H4222FM	81349	. RESISTOR	1		
-5	RLR07C472JR	81349	. RESISTOR	2		
-6	RJR24FW102P	81349	. RESISTOR	1		
-7	RNC55H1212FM	81349	. RESISTOR	1		
-8	RLR07C562JR	81349	. RESISTOR	1		
-9	JANTX1N4148	81349	. SEMICONDUCTOR DEVICE, DIODE	6		
-10	RNC55H1872FM	81349	. RESISTOR	3		
-11	JM38510-10101BLB	81349	. MICROCIRCUIT	6		
-12	RLR07C184JR	81349	. RESISTOR	1		
-13	RLR07C153JR	81349	. RESISTOR	2		
-14	RLR07C822JR	81349	. RESISTOR	1		
-15	RCR07G105KS	81349	. RESISTOR	2		
-16	RNC55H1502FM	81349	. RESISTOR	2		
-17	RNC55H8661FM	81349	. RESISTOR	1		
-18	JANTX1N938B	81349	. SEMICONDUCTOR DEVICE, DIODE	1		
-19	RNC55H3303FM	81349	. RESISTOR	1		
-20	RNC55H113FP	81349	. RESISTOR	1		
-21	RNC55H2612FM	81349	. RESISTOR	1		
-22	RLR07C682JR	81349	. RESISTOR	1		
-23	RNC55H1543FM	81349	. RESISTOR	1		
-24	RLR07C222JR	81349	. RESISTOR (SELECTED)	2		
-25	RNC55H3653FM	81349	. RESISTOR	1		
-26	RWR89SR100FM	81349	. RESISTOR	1		
-27	CSR13G476KM	81349	. CAPACITOR	1		
-28	RLR07C223JR	81349	. RESISTOR	1		
-29	RNC55H2002FM	81349	. RESISTOR (SELECTED)	1		
-30	RLR07C331JR	81349	. RESISTOR	2		
-31	JANTX2N2222A	81349	. TRANSISTOR	2		
-32	5130SCDTSD2	14844	. TERMINAL	13		
-33	JANTX1N5809	81349	. SEMICONDUCTOR DEVICE, DIODE	1		
-34	M5757-1356	81349	. RELAY	1		
	MS51957-13	96906	. SCREW (AP)	2		
	MS35338-78	96906	. WASHER (AP)	2		
	MS15795-304	96906	. WASHER (AP)	2		
	MS35649-244	96906	. NUT (AP)	2		
-35	22423-6214	14844	. BRACKET, RELAY MOUNTING	2		
	MS51959-4	96906	. SCREW (AP)	2		
	MS35338-134	96906	. WASHER (AP)	2		
	AN960C3	88044	. WASHER (AP)	2		
	MS35649-224	96906	. NUT (AP)	2		
-36	RLR07C272JR	81349	. RESISTOR	2		
-37	JANTX2N2905A	81349	. TRANSISTOR	1		
-38	RLR07C332JR	81349	. RESISTOR	1		
-39	22152-6214	14844	. BOARD, PRINTED WIRING	1		

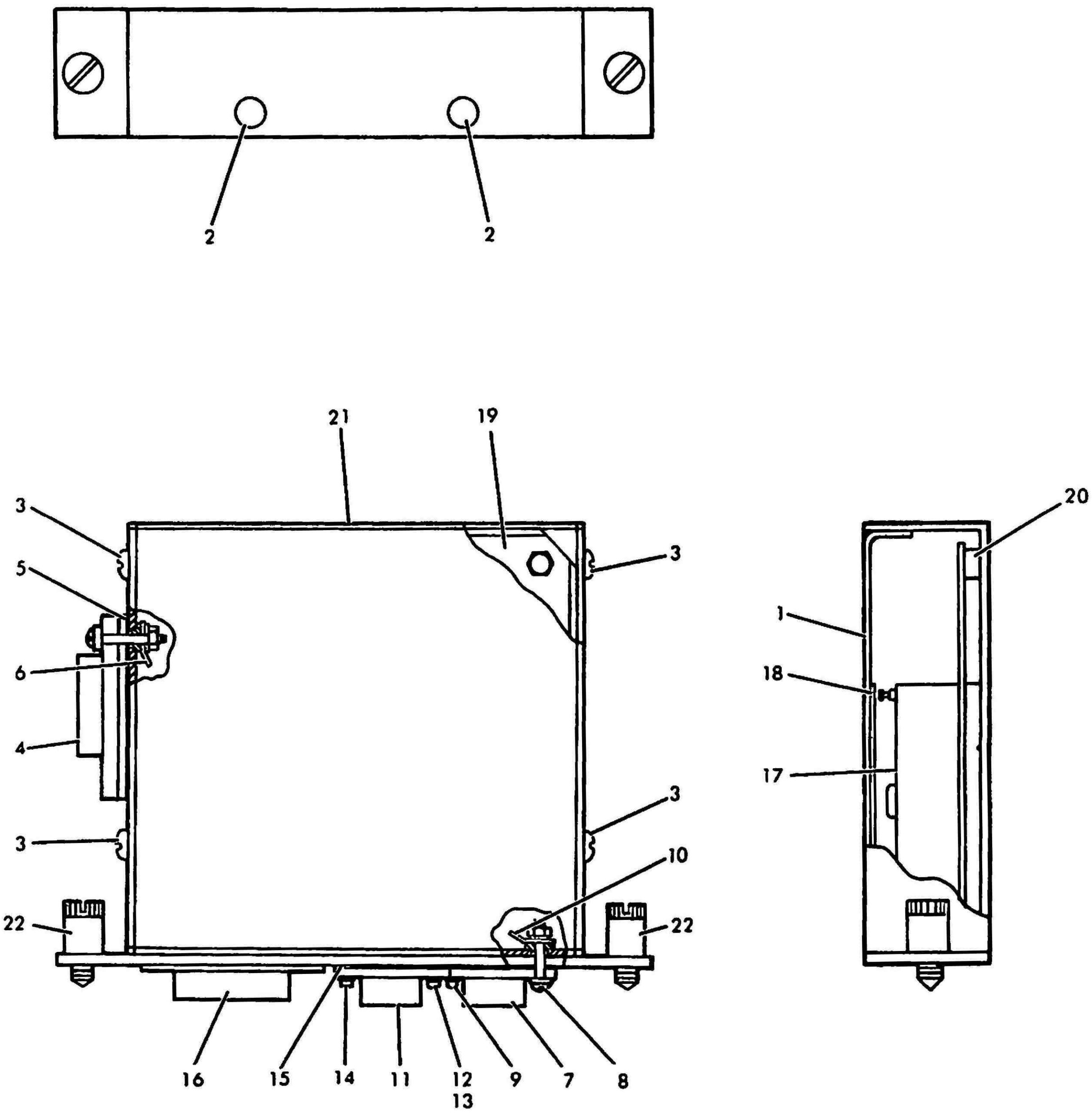

4493-BM-28B

Figure 7-8. DC to DC Converter Module Assembly

FIGURE AND INDEX NO.	PART NUMBER	FSCM	DESCRIPTION 1 2 3 4 5 6 7	UNITS PER ASSY	USABLE ON CODE	SMR
8 -	22120-6213	14844	MODULE ASSEMBLY, DC TO DC CONVERTER (SEE FIGURE 1 FOR NHA)	REF		
-1	22132-6213-2	14844	. COVER	1		
-2	MS51959-14	96906	. SCREW	2		
-3	MS51957-14	96906	. SCREW	4		
	MS35338-135	96906	. WASHER	4		
-4	M38510-10701BYB	81349	. MICROCIRCUIT	1		
	MS51957-15	96906	. SCREW (AP)	2		
	MS35338-135	96906	. WASHER (AP)	2		
	SW4	95987	. WASHER, SHOULDER (AP)	2		
	MS15795-803	96906	. WASHER (AP)	2		
	MS35649-244	96906	. NUT (AP)	2		
-5	4003	13103	. HEATSINK	1		
-6	805	79963	. TERMINAL, LUG	1		
-7	JANTX2N5664	81349	. TRANSISTOR	1		
-8	MS51957-15	96906	. SCREW	1		
	MS15795-803	96906	. WASHER	1		
	SW4	95987	. WASHER, SHOULDER	1		
	MS35338-135	96906	. WASHER	1		
	MS35649-244	96906	. NUT	1		
-9	MS51957-13	96906	. SCREW	1		
	MS35338-135	96906	. WASHER	1		
	MS15795-803	96906	. WASHER	1		
	SW4	95987	. WASHER, SHOULDER	1		
	MS35649-244	96906	. NUT	1		
-10	805	79963	. TERMINAL, LUG	1		
-11	JANTX2N5664	81349	. TRANSISTOR	1		
-12	MS51957-15	96906	. SCREW	1		
	MS15795-803	96906	. WASHER	1		
	SW4	95987	. WASHER, SHOULDER	1		
	MS35338-135	96906	. WASHER	1		
	MS35649-244	96906	. NUT	1		
-13	805	79963	. TERMINAL, LUG	1		
-14	MS51957-13	96906	. SCREW	1		
	MS35338-135	96906	. WASHER	1		
	MS15795-803	96906	. WASHER	1		
	SW4	95987	. WASHER, SHOULDER	1		
	MS35649-244	96906	. NUT	1		
-15	4003	13103	. HEATSINK	1		
-16	M24308-3-2	81349	. CONNECTOR	1		
	MS51959-14	96906	. SCREW (AP)	2		
	MS35338-135	96906	. WASHER (AP)	2		
	MS15795-803	96906	. WASHER (AP)	2		
-17	22131-6213	14844	. TRANSFORMER	1		
	MS51957-13	96906	. SCREW (AP)	1		
-18	22125-6213	14844	. INSULATOR, TRANSFORMER	1		
-19	22122-6213	14844	. BOARD ASSEMBLY, DC TO DC CONVERTER (SEE FIGURE 9 FOR BREAKDOWN)	1		
	MS51959-13	96906	. SCREW (AP)	1		
-20	22113STD4	14844	. STANDOFF, 4-40 X 1/8 LONG	4		
	MS51959-15	96906	. SCREW (AP)	4		
	MS35338-135	96906	. WASHER (AP)	4		
	MS35649-244	96906	. NUT (AP)	4		
-21	22132-6213-1	14844	. CHASSIS	1		
-22	FKN7900-8A1PL	08524	. . SCREW, CAPTIVE, NO. 8-32	2		

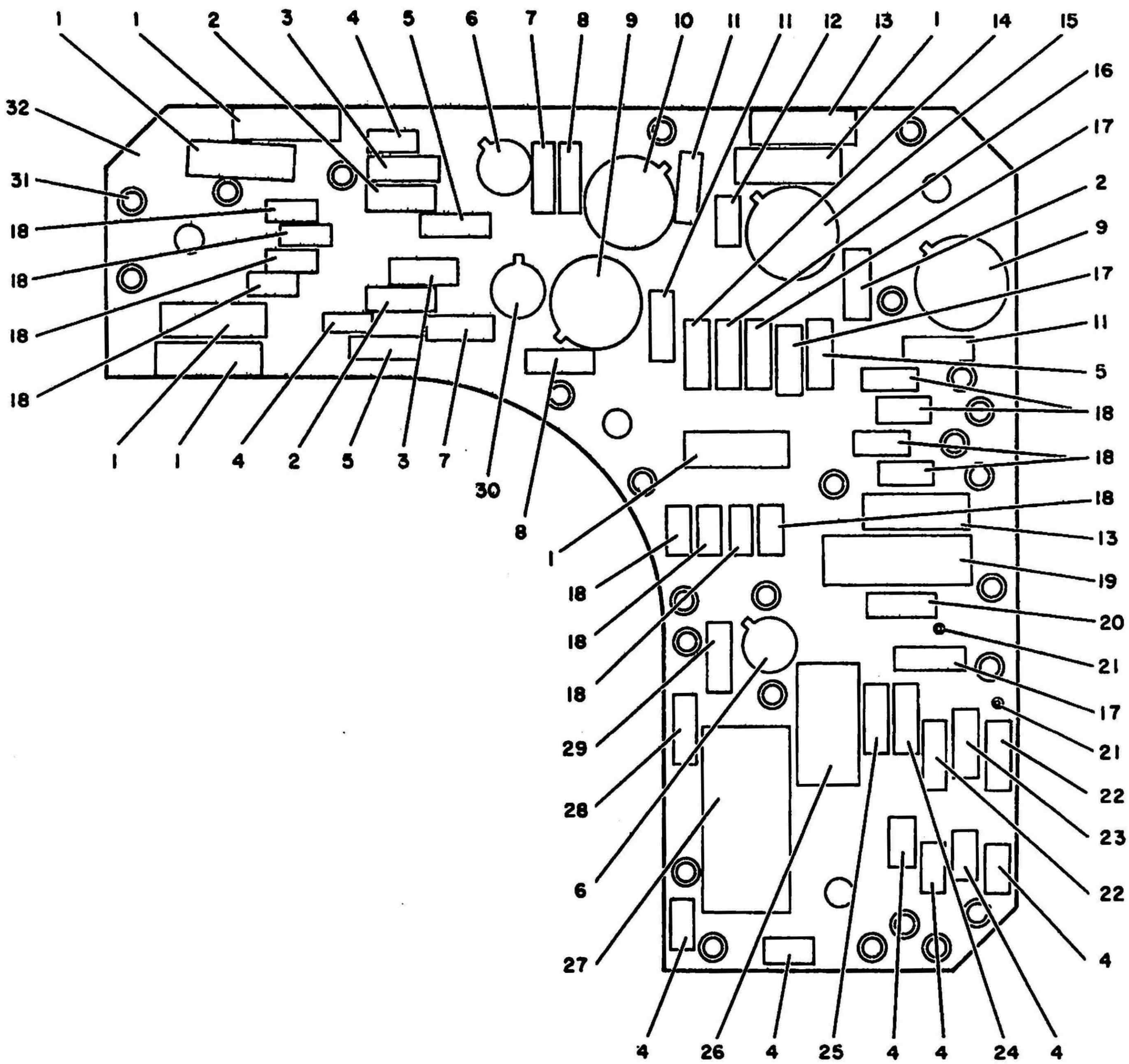

Figure 7-9. DC to DC Converter Board Assembly

FIGURE AND INDEX NO.		PART NUMBER	FSCM	DESCRIPTION 1 2 3 4 5 6 7	UNITS PER ASSY	USABLE ON CODE	SMR
9	-	22122	14844	BOARD ASSEMBLY, DC TO DC CONVERTER (SEE FIGURE 8 FOR NHA)	REF		
	-1	CSR13G105KM	81349	. CAPACITOR	6		
	-2	JANTX1N752A	81349	. SEMICONDUCTOR DEVICE, DIODE	3		
	-3	RLR07C392JR	81349	. RESISTOR	2		
	-4	CKR05BX103KR	81349	. CAPACITOR	8		
	-5	RLR07C103JR	81349	. RESISTOR	3		
	-6	JANTX2N2222A	81349	. TRANSISTOR	2		
	-7	RLR07C123JR	81349	. RESISTOR (SELECTED)	2		
	-8	RLR07C154JR	81349	. RESISTOR (SELECTED)	2		
	-9	JANTX2N2905A	81349	. TRANSISTOR	2		
	-10	JANTX2N2219A	81349	. TRANSISTOR	1		
	-11	RLR07C272JR	81349	. RESISTOR	3		
	-12	CKR05BX102KR	81349	. CAPACITOR	1		
	-13	CSR13D335KM	81349	. CAPACITOR	2		
	-14	RLR07C274JR	81349	. RESISTOR	1		
	-15	M38510-10201BIA	81349	. MICROCIRCUIT	1		
	-16	RLR07C473JR	81349	. RESISTOR	1		
	-17	RLR07C332JR	81349	. RESISTOR	2		
	-18	JANTX1N5615	81349	. SEMICONDUCTOR DEVICE, DIODE	12		
	-19	CSR13H335KM	81349	. CAPACITOR	1		
	-20	JANTX1N965B	81349	. SEMICONDUCTOR DEVICE, DIODE	1		
	-21	STSM16P59	98291	. TERMINAL	2		
	-22	RLR07C752JR	81349	. RESISTOR	2		
	-23	RLR07C203JR	81349	. RESISTOR	1		
	-24	RLR07C561JR	81349	. RESISTOR	1		
	-25	RLR07C123JR	81349	. RESISTOR	1		
	-26	22728-6200R25	14844	. COIL	1		
	-27	CSR13F476KM	81349	. CAPACITOR	1		
	-28	RLR07C270JR	81349	. RESISTOR	1		
	-29	RLR07C222JR	81349	. RESISTOR	1		
	-30	JANTX2N2907A	81349	. TRANSISTOR	1		
	-31	5130SCDTSD2	14844	. TERMINAL	26		
	-32	22130-6213	14844	. BOARD, PRINTED WIRING	1		

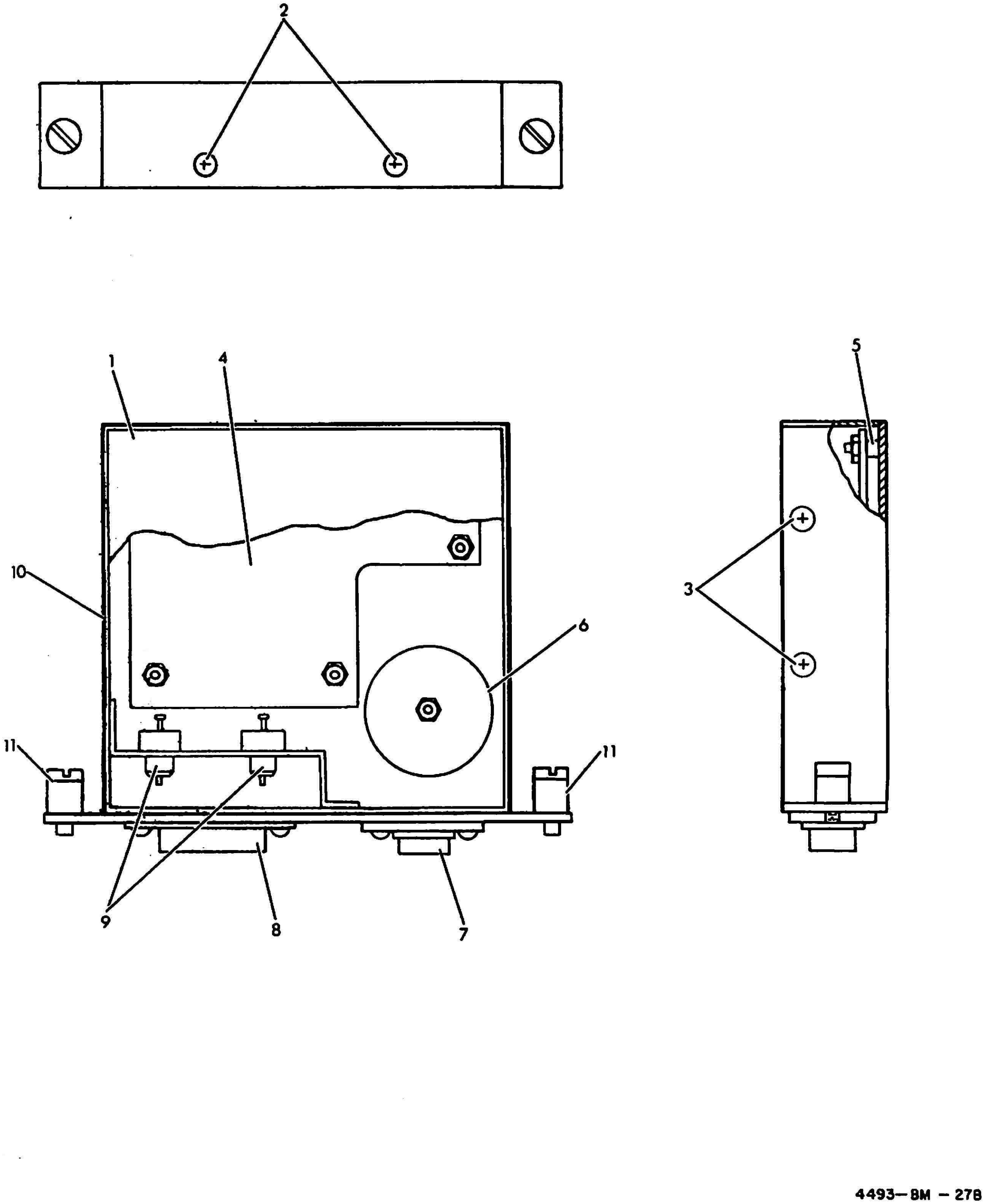

Figure 7-10. +18 VDC Switching Regulator Module Assembly

FIGURE AND INDEX NO.		PART NUMBER	FSCM	DESCRIPTION 1 2 3 4 5 6 7	UNITS PER ASSY	USABLE ON CODE	SMR
10	-	22100-6212	14844	MODULE ASSEMBLY, SWITCHING REGULATOR, +18 VDC (SEE FIGURE 1 FOR NHA)	REF		
	-1	22112-6212-2	14844	. COVER	1		
	-2	MS51959-14	96906	. SCREW	2		
	-3	MS51957-14	96906	. SCREW	4		
		MS35338-135	96906	. WASHER	4		
	-4	22101-6212	14844	. BOARD ASSEMBLY, SWITCHING REGULATOR, +18 . VDC (SEE FIGURE 11 FOR BREAKDOWN)	1		
		MS51959-15	96906	. SCREW (AP)	5		
		MS15795-304	96906	. WASHER (AP)	5		
		MS35338-135	96906	. WASHER (AP)	5		
		MS21044-04	96906	. NUT (AP)	5		
	-5	22113-2	14844	. STANDOFF	5		
	-6	22116-6212	14844	. INDUCTOR, TOROID, 0.5UH, +5PCT	1		
		MS51959-13	96906	. SCREW (AP)	1		
		MS15795-304	96906	. WASHER (AP)	1		
		M21044-04	96906	. NUT (AP)	1		
	-7	22761-6200	14844	. MICROCIRCUIT	1		
		MS51957-4	96906	. SCREW (AP)	2		
		MS35338-134	96906	. WASHER (AP)	2		
		MS15795-302	96906	. WASHER (AP)	2		
	-8	M24308-3-2	81349	. CONNECTOR	1		
		MS51957-5	96906	. SCREW (AP)	2		
		MS35338-134	96906	. WASHER (AP)	2		
		MS35649-224	96906	. NUT (AP)	2		
	-9	M15733-49-001	81349	. FILTER, RADIO FREQUENCY	2		
	-10	22112-6212-1	14844	. CHASSIS	1		
	-11	FKN7900-8A1PL	08524	. . SCREW, CAPTIVE	2		

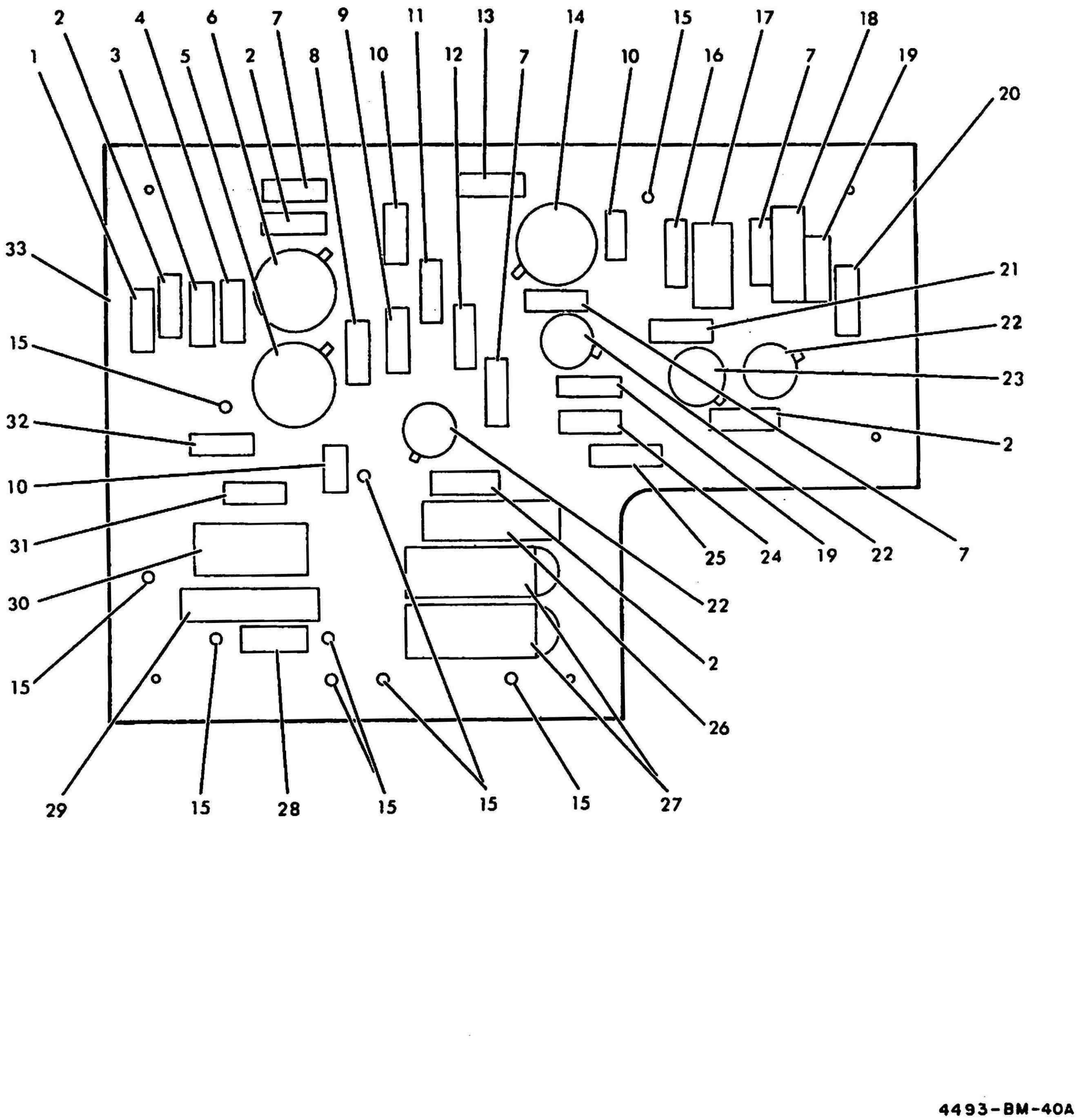

Figure 7-11. +18 VDC Switching Regulator Board Assembly

FIGURE AND INDEX NO.	PART NUMBER	FSCM	DESCRIPTION 1 2 3 4 5 6 7	UNITS PER ASSY	USABLE ON CODE	SMR
11 -	22101-6212	14844	BOARD ASSEMBLY, SWITCHING REGULATOR, +18 VDC. (SEE FIGURE 10 FOR NHA)	REF		
-1	JANTX1N968B	81349	. SEMICONDUCTOR DEVICE, DIODE	1		
-2	JANTX1N4148	81349	. SEMICONDUCTOR DEVICE, DIODE	4		
-3	RCR076222KP	81349	. RESISTOR	1		
-4	RCR07C103JR	81349	. RESISTOR	1		
-5	JANTX2N3507	81349	. TRANSISTOR	1		
-6	JANTX2N2219A	81349	. TRANSISTOR	1		
-7	RCR07C472JR	81349	. RESISTOR	4		
-8	JANTX1N752A	81349	. SEMICONDUCTOR DEVICE, DIODE	1		
-9	RLR07C102JR	81349	. RESISTOR	1		
-10	CKR06BX104KR	81349	. CAPACITOR	3		
-11	JANTX1N749A	81349	. SEMICONDUCTOR DEVICE, DIODE	1		
-12	RLR07C153JR	81349	. RESISTOR	1		
-13	RLR07C332JR	81349	. RESISTOR	1		
-14	JM38510-10101BGB	81349	. MICROCIRCUIT	1		
-15	5130SCDTSD2	14844	. TERMINAL	9		
-16	RCR076274KP	81349	. RESISTOR	1		
-17	RJR24FW102P	81349	. RESISTOR	1		
-18	CSR13G105KM	81349	. CAPACITOR	1		
-19	RNC55H8251FP	81349	. RESISTOR	2		
-20	JANTX1N938B	81349	. SEMICONDUCTOR DEVICE, DIODE	1		
-21	RLR07C682JR	81349	. RESISTOR	1		
-22	JANTX2N2907A	81349	. TRANSISTOR	3		
-23	JANTX2N2222A	81349	. TRANSISTOR	1		
-24	RLR07C122JR	81349	. RESISTOR	1		
-25	JANTX1N5641A	81349	. SEMICONDUCTOR DEVICE, DIODE	1		
-26	M39006-09-8165	81349	. CAPACITOR	1		
-27	CL65BH151MPE	81349	. CAPACITOR	2		
-28	FM04-125V3A	81349	. FUSE	1		
-29	RWR89S120FM	81349	. RESISTOR	1		
-30	22728-6200	14844	. INDUCTOR, 0.25UH, PORM 10PCT	1		
-31	RLR07C331JR	81349	. RESISTOR	1		
-32	RLR07C822JR	81349	. RESISTOR	1		
-33	22110-6212	14844	. BOARD, PRINTED WIRING	1		

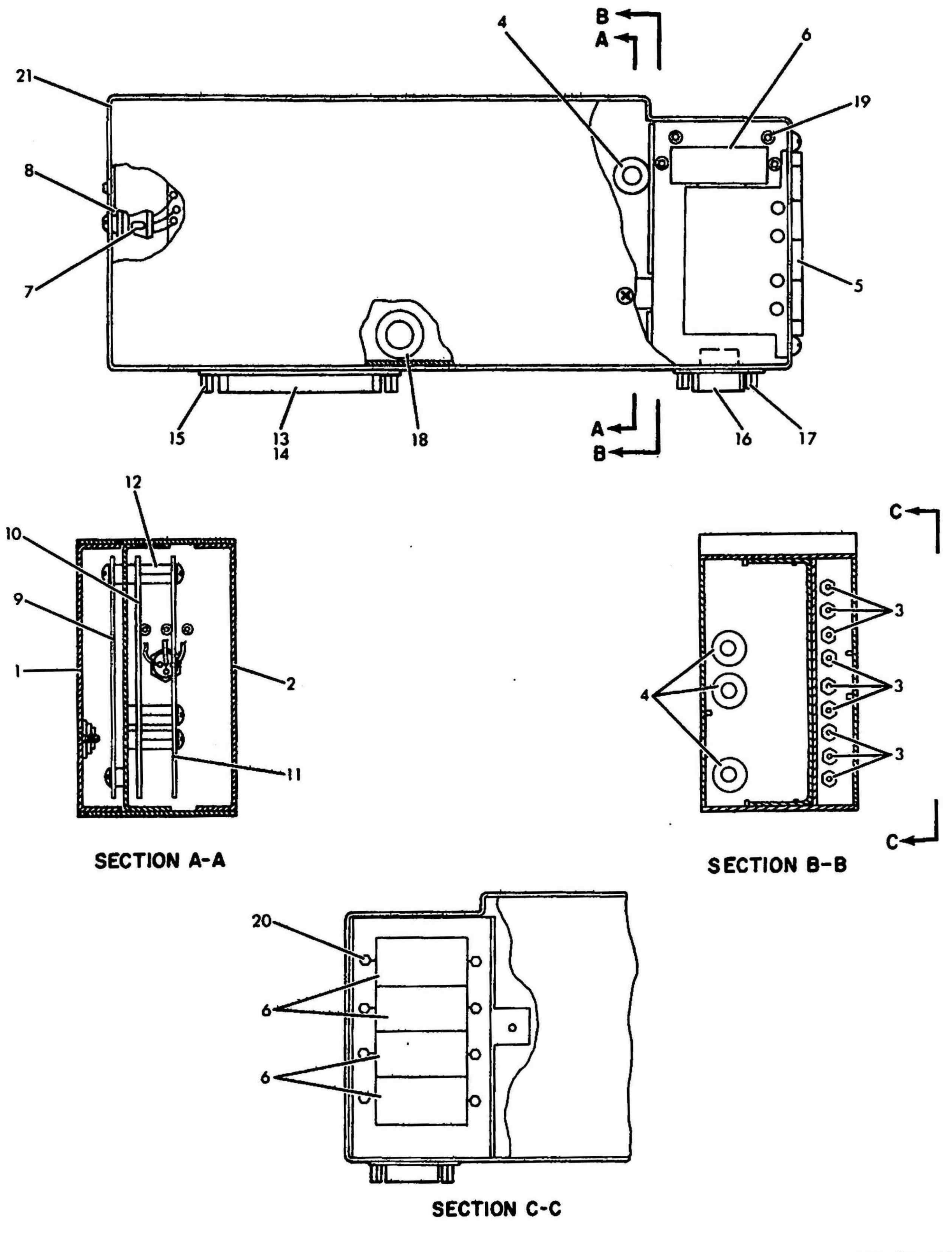

Figure 7-12. Synthesizer Assembly

FIGURE AND INDEX NO.		PART NUMBER	FSCM	DESCRIPTION 1 2 3 4 5 6 7	UNITS PER ASSY	USABLE ON CODE	SMR
12	-	21930-6207	14844	SYNTHESIZER ASSEMBLY (SEE FIGURE 1 FOR NHA) .	REF		
	-1	21945-6207-2	14844	. COVER, LEFT	1		
	-2	21945-6207-3	14844	. COVER, RIGHT	1		
		MS51959-13	96906	. SCREW (AP)	17		
	-3	22752-6200	14844	. CAPACITOR, FEED THRU, 1500PF	9		
	-4	2172	83330	. GROMMET	4		
	-5	22776-6200	14844	. SWITCH ASSEMBLY, THUMBWHEEL	1		
		MS51959-4	96906	. SCREW (AP)	4		
		MS51957-2	96906	. SCREW (AP)	8		
		MS15795-302	96906	. WASHER (AP)	12		
		MS35338-77	96906	. WASHER (AP)	12		
		MS35649-244	96906	. NUT (AP)	4		
	-6	21947-6207	14844	. CAPACITOR, 20MF, PORM 20PCT, 50 WVDC . . .	6		
	-7	JANTX2N2219A	81349	. TRANSISTOR	1		
	-8	260-4TH5B	14844	. HEAT SINK	1		
		MS51957-12	96906	. SCREW (AP)	1		
		MS15795-304	96906	. WASHER (AP)	1		
		MS35338-78	96906	. WASHER (AP)	1		
	-9	21931-6207	14844	. BOARD ASSEMBLY, SINGLE SIDE BAND AND . . . DIVIDER (SEE FIGURE 13 FOR BREAKDOWN)	1		
		MS51957-14	96906	. SCREW (AP)	5		
		MS15795-304	96906	. WASHER (AP)	5		
		MS35338-78	96906	. WASHER (AP)	5		
	-10	21932-6207	14844	. BOARD ASSEMBLY, SINGLE SIDE BAND AND MIXER/ DIVIDER (SEE FIGURE 14 FOR BREAKDOWN)	1		
	-11	21933-6207	14844	. BOARD ASSEMBLY, LOOP INTEGRATOR AND . . . . REGULATOR (SEE FIGURE 15 FOR BREAKDOWN)	1		
		MS51957-13	96906	. SCREW (AP)	5		
		MS15795-304	96906	. WASHER (AP)	5		
		MS35338-78	96906	. WASHER (AP)	5		
	-12	21946STD	14844	. STANDOFF, MALE-FEMALE, NO. 4-40	5		
	-13	DCM8W8P	71468	. CONNECTOR, RECEPTACLE, ELECTRICAL	1		
	-14	DMS3741-5059	71468	. . CONTACT, COAXIAL, RIGHT ANGLE	8		
	-15	D20418-2	71468	. . SCREW LOCK ASSEMBLY, FEMALE	2		
	-16	M24308-3-1	81349	. CONNECTOR	1		
	-17	M24308-26-1	81349	. . SCREW LOCK ASSEMBLY, FEMALE	2		
	-18	2175	83330	. GROMMET	1		
	-19	STSM16PS9	98291	. TERMINAL, TEFLON	2		
	-20	1491A5-12	15849	. TERMINAL, INSULATED	4		
		MS51959-1	96906	. SCREW (AP)	4		
		MS35338-78	96906	. WASHER (AP)	4		
	-21	21945-6207-1	14844	. HOUSING	1		

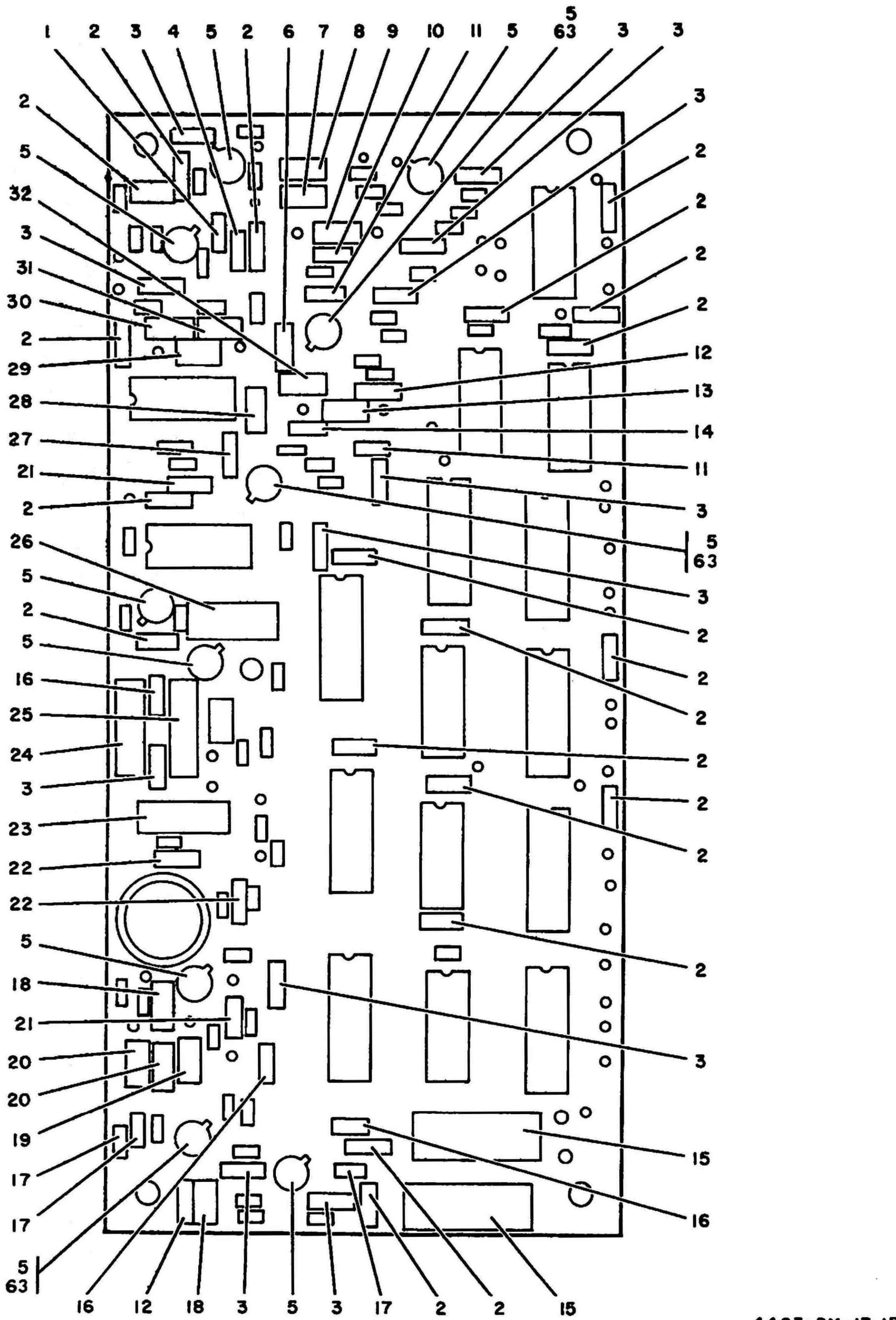

Figure 7-13. Single Side Band and Divider Board Assembly (Sheet 1 of 2)

FIGURE AND INDEX NO.	PART NUMBER	FSCM	DESCRIPTION 1 2 3 4 5 6 7	UNITS PER ASSY	USABLE ON CODE	SMR
13 -	21931-6207	14844	BOARD ASSEMBLY, SINGLE SIDE BAND AND DRIVER . (SEE FIGURE 12 FOR NHA)	REF		
13 /1 -1	MS75084-7	96906	. CHOKE	1		
13 /1 -2	CKR05BX104KR	81349	. CAPACITOR	19		
13 /1 -3	CKR05BX103KR	81349	. CAPACITOR	11		
13 /1 -4	MS75085-11	96906	. INDUCTOR	1		
13 /1 -5	JANTX2N2369A	81349	. TRANSISTOR	10		
13 /1 -6	CMR04E200JODL	81349	. CAPACITOR	1		
13 /1 -7	CMR04E620JODL	81349	. CAPACITOR	1		
13 /1 -8	CMR04E430JODL	81349	. CAPACITOR	1		
13 /1 -9	CMR04E***JODL	81349	. CAPACITOR (SELECTED)	1		
13 /1 -10	MS75083-13	96906	. INDUCTOR	1		
13 /1 -11	MS75085-2	96906	. INDUCTOR	2		
13 /1 -12	CKR05BX102KR	81349	. CAPACITOR	2		
13 /1 -13	CMR04E***JODL	81349	. CAPACITOR (SELECTED)	1		
13 /1 -14	MS75084-2	96906	. INDUCTOR	1		
13 /1 -15	CSR13F226KM	81349	. CAPACITOR	2		
13 /1 -16	MS75085-12	96906	. INDUCTOR	3		
13 /1 -17	JANTX1N4148	81349	. SEMICONDUCTOR DEVICE, DIODE	3		
13 /1 -18	CMR04F391JOAL	81349	. CAPACITOR	2		
13 /1 -19	CMR06F471JOAL	81349	. CAPACITOR	1		
13 /1 -20	CMR04F271JOCL	81349	. CAPACITOR	2		
13 /1 -21	MS75084-5	96906	. CHOKE	2		
13 /1 -22	22740-6200	14844	. SEMICONDUCTOR DEVICE, DIODE	2		
13 /1 -23	CSR13D335KM	81349	. CAPACITOR	1		
13 /1 -24	CSR13F685KM	81349	. CAPACITOR	1		
13 /1 -25	CSR13C475KM	81349	. CAPACITOR	1		
13 /1 -26	CMR06F561JODL	81349	. CAPACITOR	1		
13 /1 -27	CMR04F331JOAL	81349	. CAPACITOR	1		
13 /1 -28	CMR04E750JODL	81349	. CAPACITOR	1		
13 /1 -29	CMR04E***JODL	81349	. CAPACITOR (SELECTED)	1		
13 /1 -30	CMR04F101JODL	81349	. CAPACITOR	1		
13 /1 -31	CMR04F151JODL	81349	. CAPACITOR	1		
13 /1 -32	CMR04E560JODL	81349	. CAPACITOR	1		
13 /2 -33	RLR05C392JR	81349	. RESISTOR	3		
13 /2 -34	RLR05C101JR	81349	. RESISTOR	11		
13 /2 -35	RLR05C222JR	81349	. RESISTOR	7		
13 /2 -36	RLR05C272JR	81349	. RESISTOR	1		
13 /2 -37	RLR05C422JR	81349	. RESISTOR	5		
13 /2 -38	RLR05C680JR	81349	. RESISTOR	2		
13 /2 -39	RLR05C393JR	81349	. RESISTOR	1		
13 /2 -40	JM38510-30003BCB	81349	. MICROCIRCUIT	3		
13 /2 -41	RLR05C471JR	81349	. RESISTOR	1		
13 /2 -42	JM38510-32001BCB	81349	. MICROCIRCUIT	1		
13 /2 -43	JM38510-30102BCB	81349	. MICROCIRCUIT	3		
13 /2 -44	JM38510-31509BEB	81349	. MICROCIRCUIT	8		
13 /2 -45	JM38510-30007BCB	81349	. MICROCIRCUIT	1		
13 /2 -46	RLR05C753JR	81349	. RESISTOR	1		
13 /2 -47	RLR05C183JR	81349	. RESISTOR	1		
13 /2 -48	RLR05C182JR	81349	. RESISTOR	2		
13 /2 -49	RLR05C123JR	81349	. RESISTOR	1		
13 /2 -50	RLR05C470JR	81349	. RESISTOR	1		
13 /2 -51	RLR05C124JR	81349	. RESISTOR	1		
13 /2 -52	RLR05C154JR	81349	. RESISTOR	3		
13 /2 -53	22739-6200	14844	. CRYSTAL, QUARTZ, 5MHZ	1		
13 /2 -54	RLR05C102JR	81349	. RESISTOR	4		
13 /2 -55	RJR26FW203P	81349	. RESISTOR	1		
13 /2 -56	RLR05C221JR	81349	. RESISTOR	3		
13 /2 -57	RLR05C102JR	81349	. RESISTOR	1		
13 /2 -58	RLR05C113JR	81349	. RESISTOR	1		
13 /2 -59	RLR05C683JR	81349	. RESISTOR	1		
13 /2 -60	RLR05C122JR	81349	. RESISTOR	1		
13 /2 -61	RLR05C151JR	81349	. RESISTOR	1		
13 /2 -62	RLR05C820JR	81349	. RESISTOR	1		
13 /2 -63	10033DAP	07047	. SPREADER	3		
13 /2 -64	7830SCDTSD2	14844	. TERMINAL	52		
13 /2 -65	5130SCDTSD2	14844	. TERMINAL	2		
13 /2 -66	21941-6207	14844	. BOARD, PRINTED WIRING	1		

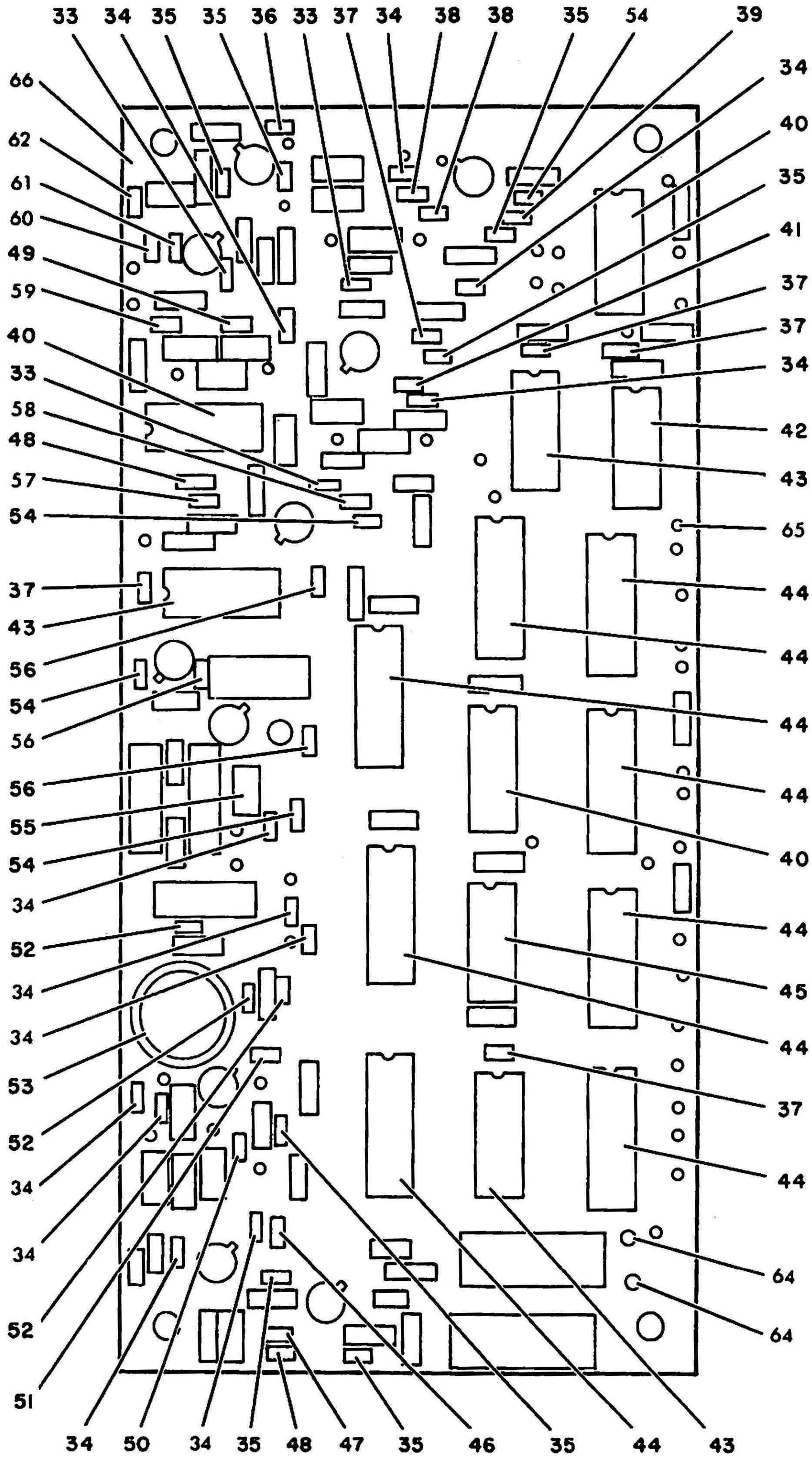

Figure 7-13. Single Side Band and Divider Board Assembly (Sheet 2 of 2)

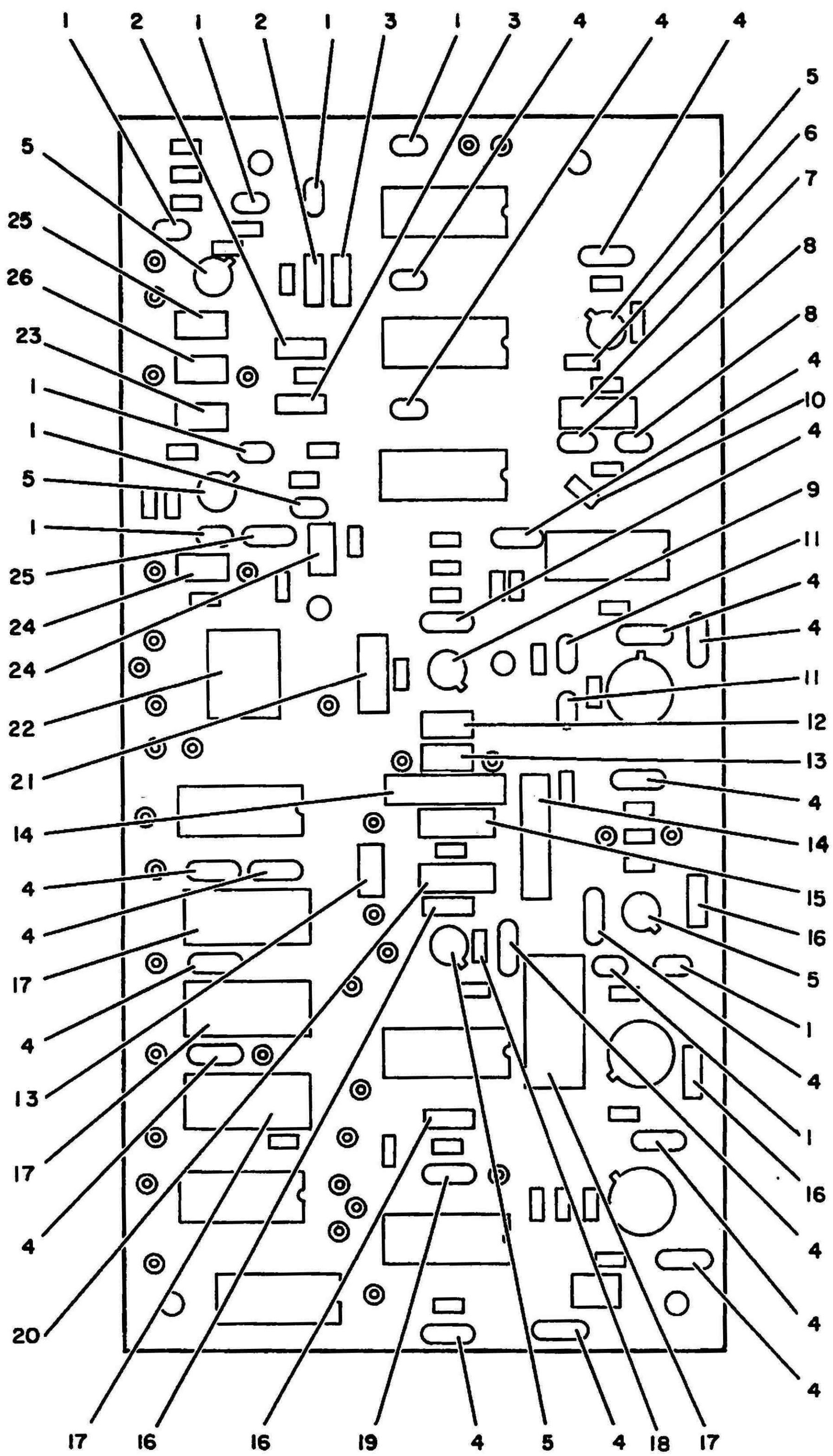

4493—BM—18—1B

Figure 7-14. Single Side Band and Mixer Board Assembly (Sheet 1 of 2)

FIGURE AND INDEX NO.	PART NUMBER	FSCM	DESCRIPTION 1 2 3 4 5 6 7	UNITS PER ASSY	USABLE ON CODE	SMR
14 -	21932-6207	14844	BOARD ASSEMBLY, SINGLE SIDE BAND AND MIXER . DIVIDER (SEE FIGURE 12 FOR NHA)	REF		
14 /1 -1	CKR05BX103KR	81349	. CAPACITOR	9		
14 /1 -2	MS75085-2	96906	. INDUCTOR	2		
14 /1 -3	MS75084-3	96906	. INDUCTOR	2		
14 /1 -4	CKR06BX104KR	81349	. CAPACITOR	18		
14 /1 -5	JANTX2N2369A	81349	. TRANSISTOR	5		
14 /1 -6	RLR05C153JR	81349	. RESISTOR	1		
14 /1 -7	MS75084-8	96906	. INDUCTOR	1		
14 /1 -8	CKR05BX562KR	81349	. CAPACITOR	2		
14 /1 -9	JANTX2N2222A	81349	. TRANSISTOR	1		
14 /1 -10	CKR05BX104KR	81349	. CAPACITOR	1		
14 /1 -11	CKR06BX474KR	81349	. CAPACITOR	2		
14 /1 -12	CMR04F121JODML	81349	. CAPACITOR	1		
14 /1 -13	CMR04F331JODL	81349	. CAPACITOR (SELECTED).	2		
14 /1 -14	CKR06BX102KR	81349	. CAPACITOR	2		
14 /1 -15	MS75085-6	96906	. INDUCTOR	1		
14 /1 -16	JANTX1N4148	81349	. SEMICONDUCTOR DEVICE, DIODE	5		
14 /1 -17	CSR13F226KM	81349	. CAPACITOR	4		
14 /1 -18	RLR05C563JR	81349	. RESISTOR	1		
14 /1 -19	CKR06BX103KR	81349	. CAPACITOR	1		
14 /1 -20	MS75084-15	96906	. INDUCTOR	1		
14 /1 -21	MS75085-7	96906	. INDUCTOR	1		
14 /1 -22	22716-6200	14844	. MIXER	1		
14 /1 -23	CMR04E470JODL	81349	. CAPACITOR	2		
14 /1 -24	CMR04EXXXJODL	81349	. CAPACITOR (SELECTED).	1		
14 /1 -25	CMR04C120JODL	81349	. CAPACITOR	2		
14 /1 -26	CMR04EXXXJODL	81349	. CAPACITOR (SELECTED).	1		
14 /2 -27	RLR05C680JR	81349	. RESISTOR	3		
14 /2 -28	RLR05C472JR	81349	. RESISTOR	8		
14 /2 -29	RLR05C102JR	81349	. RESISTOR	2		
14 /2 -30	RLR05C222JR	81349	. RESISTOR	2		
14 /2 -31	RLR05C910JR	81349	. RESISTOR	2		
14 /2 -32	JM38510-31510BCB	81349	. MICROCIRCUIT	1		
14 /2 -33	JM38510-31510BCB	81349	. MICROCIRCUIT	3		
14 /2 -34	RLR05C152JR	81349	. RESISTOR	1		
14 /2 -35	RLR05C392JR	81349	. RESISTOR	1		
14 /2 -36	RLR05C911JR	81349	. RESISTOR	1		
14 /2 -37	RLR05C103JR	81349	. RESISTOR	4		
14 /2 -38	RLR05C331JR	81349	. RESISTOR	2		
14 /2 -39	JM38510-30502BCB	81349	. MICROCIRCUIT	2		
14 /2 -40	RLR05C221JR	81349	. RESISTOR	1		
14 /2 -41	RLR05C270JR	81349	. RESISTOR	1		
14 /2 -42	RLR05C912JR	81349	. RESISTOR	1		
14 /2 -43	JM38510-10101BGB	81349	. MICROCIRCUIT	2		
14 /2 -44	RLR05C820JR	81349	. RESISTOR	1		
14 /2 -45	RLR05C363JR	81349	. RESISTOR	1		
14 /2 -46	RLR05C333JR	81349	. RESISTOR (SELECTED)	1		
14 /2 -47	RLR05C332JR	81349	. RESISTOR,	1		
14 /2 -48	RLR05C821JR	81349	. RESISTOR	1		
14 /2 -49	RLR05C824JR	81349	. RESISTOR	1		
14 /2 -50	JM38510-10901BGB	81349	. MICROCIRCUIT	1		
14 /2 -51	RLR05C683JR	81349	. RESISTOR	1		
14 /2 -52	RLR05C682JR	81349	. RESISTOR	1		
14 /2 -53	RJR26FW102P	81349	. RESISTOR	1		
14 /2 -54	RLR05C154JR	81349	. RESISTOR	1		
14 /2 -55	JM38510-30102BCB	81349	. MICROCIRCUIT	1		
14 /2 -56	RLR05C223JR	81349	. RESISTOR	1		
14 /2 -57	JM38510-30301BCB	81349	. MICROCIRCUIT	1		
14 /2 -58	JM38510-30003BCB	81349	. MICROCIRCUIT	1		
14 /2 -59	RLR05C682JR	81349	. RESISTOR	1		
14 /2 -60	RLR05C331JR	81349	. RESISTOR	2		
14 /2 -61	RLR05C220JR	81349	. RESISTOR	1		
14 /2 -62	RLR05C822JR	81349	. RESISTOR	1		
14 /2 -63	C5130SCDTSD2	14844	. TERMINAL	37		
14 /2 -64	21942-6207	14844	. BOARD, PRINTED WIRING	1		

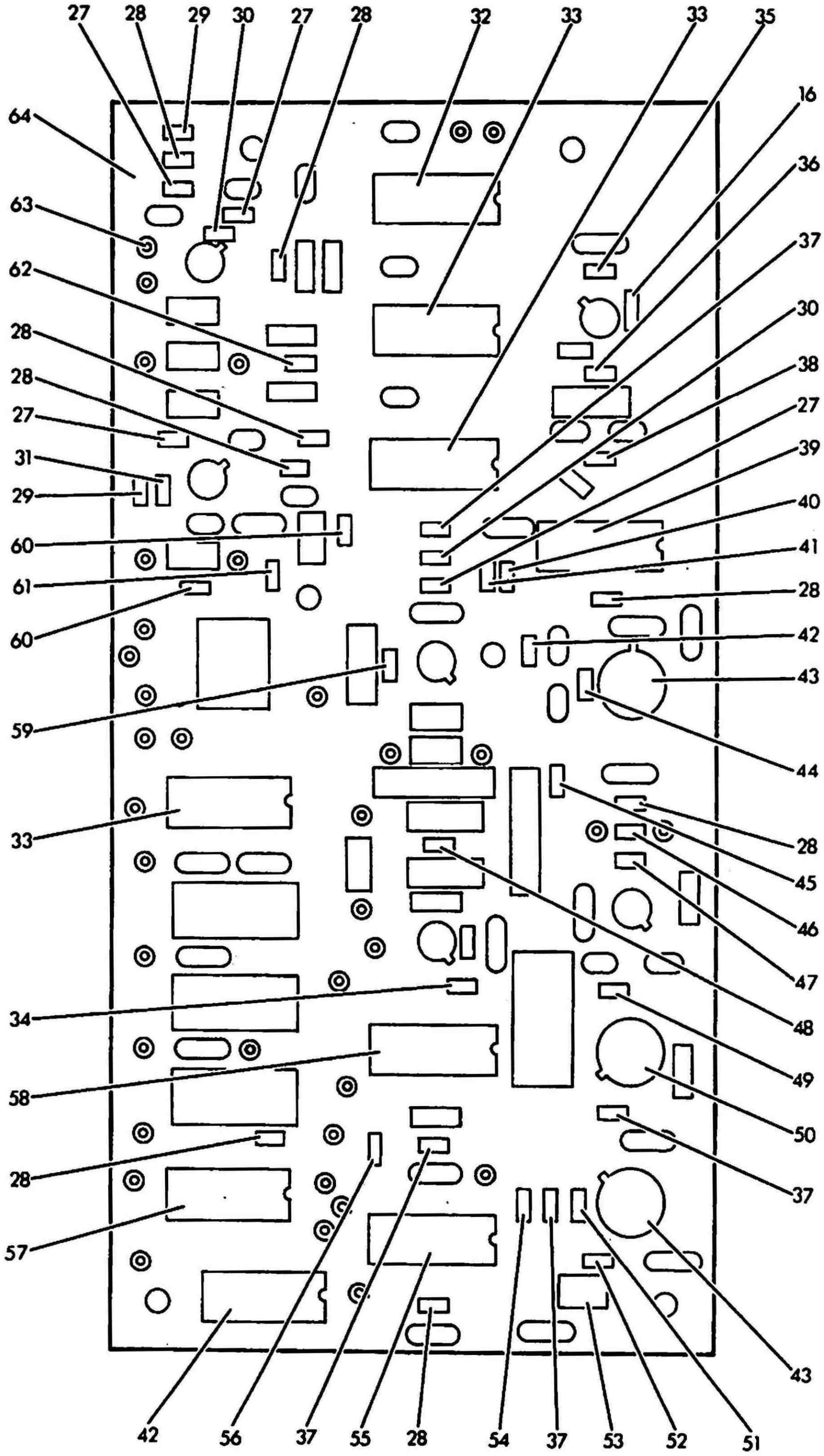

4493-BM-18-28

Figure 7-14. Single Side Band and Mixer Board Assembly (Sheet 2 of 2)

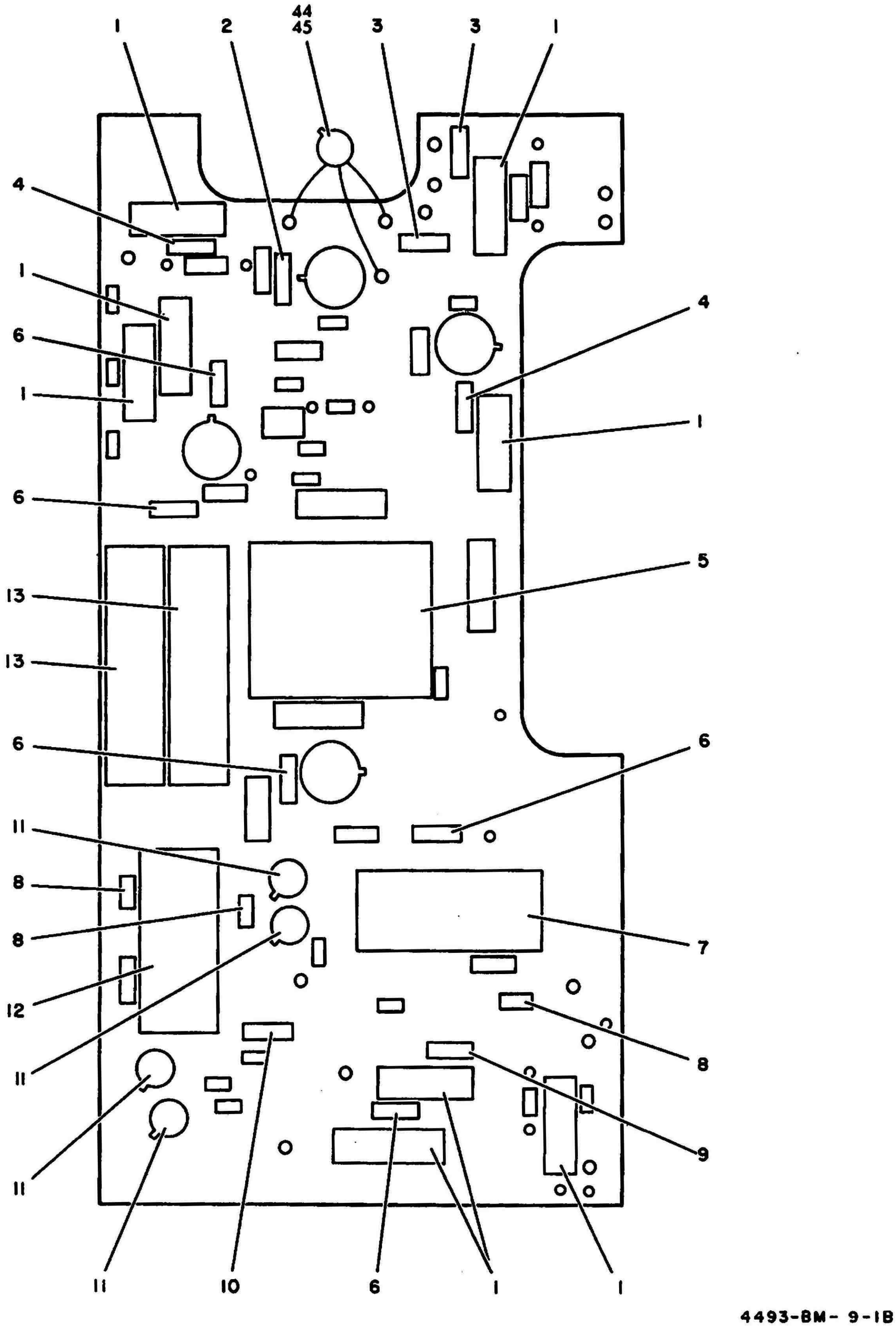

Figure 7-15. Loop Integrator and Regulator Board Assembly (Sheet 1 of 2)

FIGURE AND INDEX NO.	PART NUMBER	FSCM	DESCRIPTION 1 2 3 4 5 6 7	UNITS PER ASSY	USABLE ON CODE	SMR
15 -	21933-6207	14844	BOARD ASSEMBLY, LOOP INTEGRATOR AND REGULATOR (SEE FIGURE 12 FOR NHA)	REF		
15 /1 -1	CSR13F685KM	81349	. CAPACITOR	8		
15 /1 -2	CKR05BX102KR	81349	. CAPACITOR	1		
15 /1 -3	CKR06BX224KR	81349	. CAPACITOR	2		
15 /1 -4	CKR05BX103KR	81349	. CAPACITOR	2		
15 /1 -5	22763-6200-1	14844	. RELAY	1		
15 /1 -6	CKR05BX104KR	81349	. CAPACITOR	5		
15 /1 -7	22763-6200-2	14844	. RELAY	1		
15 /1 -8	JANTX1N4148	81349	. SEMICONDUCTOR DEVICE, DIODE	3		
15 /1 -9	JANTX1N758A	81349	. CAPACITOR	1		
15 /1 -10	CKR06BX105KR	81349	. CAPACITOR	1		
15 /1 -11	JANTX2N2222A	81349	. TRANSISTOR	4		
15 /1 -12	22763-6200-3	14844	. RELAY	1		
15 /1 -13	21947-6207	81349	. CAPACITOR	2		
15 /2 -14	RLR07C362JR	81349	. RESISTOR (SELECTED)	1		
15 /2 -15	RLR07C392JR	81349	. RESISTOR	1		
15 /2 -16	RLR05C1826P	81349	. RESISTOR	1		
15 /2 -17	JM38510-10201BIB	81349	. MICROCIRCUIT	1		
15 /2 -18	RLR07C683JR	81349	. RESISTOR	1		
15 /2 -19	RLR07C681JR	81349	. RESISTOR (SELECTED)	1		
15 /2 -20	RLR05C242JR	81349	. RESISTOR	1		
15 /2 -21	RLR07610R0KS	81349	. RESISTOR	1		
15 /2 -22	JM38510-10202BIB	14844	. MICROCIRCUIT	1		
15 /2 -23	RLR05C102JR	81349	. RESISTOR	1		
15 /2 -24	22726-6200	14844	. RESISTOR	2		
15 /2 -25	RLR07C362JR	14844	. RESISTOR	1		
15 /2 -26	RLR05C183JR	81349	. RESISTOR	1		
15 /2 -27	RLR07C624JR	81349	. RESISTOR	1		
15 /2 -28	RLR05C473JR	81349	. RESISTOR (SELECTED)	2		
15 /2 -29	RLR07C471JR	81349	. RESISTOR	2		
15 /2 -30	RLR05C332JR	81349	. RESISTOR	2		
15 /2 -31	RLR05C562JR	81349	. RESISTOR	1		
15 /2 -32	RLR05C153JR	81349	. RESISTOR	6		
15 /2 -33	RLR07C222JR	81349	. RESISTOR	1		
15 /2 -34	RLR20G181KS	81349	. RESISTOR	1		
15 /2 -35	22762-6200	14844	. MICROCIRCUIT	1		
15 /2 -36	RLR05C223JR	81349	. RESISTOR	1		
15 /2 -37	JM38510-10101BGB	81349	. MICROCIRCUIT	1		
15 /2 -38	RLR05C273JR	81349	. RESISTOR	1		
15 /2 -39	RJR26FW103P	81349	. RESISTOR	1		
15 /2 -40	RLR05C472JR	81349	. RESISTOR	1		
15 /2 -41	RLR0764R7KS	81349	. RESISTOR	1		
15 /2 -42	5130SCDTSCD2	14844	. TERMINAL	15		
15 /2 -43	7830SCDTSCD2	14844	. TERMINAL	14		
15 /1 -44	JANTX2N2219A	81349	. TRANSISTOR	1		
15 /1 -45	260-4T115B	05820	. HEAT SINK	1		
15 /2 -46	21943-6207	14844	. BOARD, PRINTED WIRING	1		

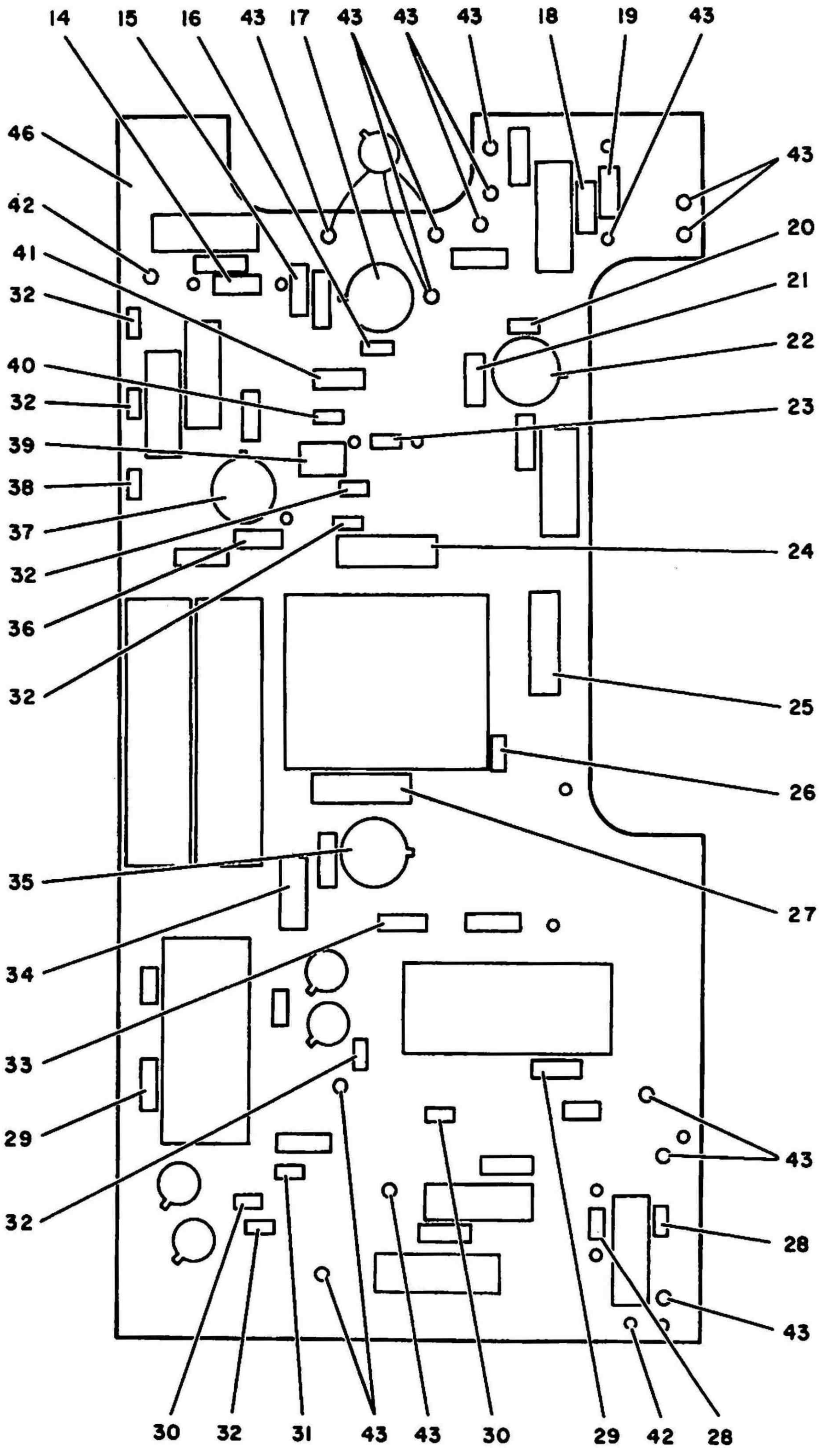

4493-BM-19-28

Figure 7-15. Loop Integrator and Regulator Board Assembly (Sheet 2 of 2)

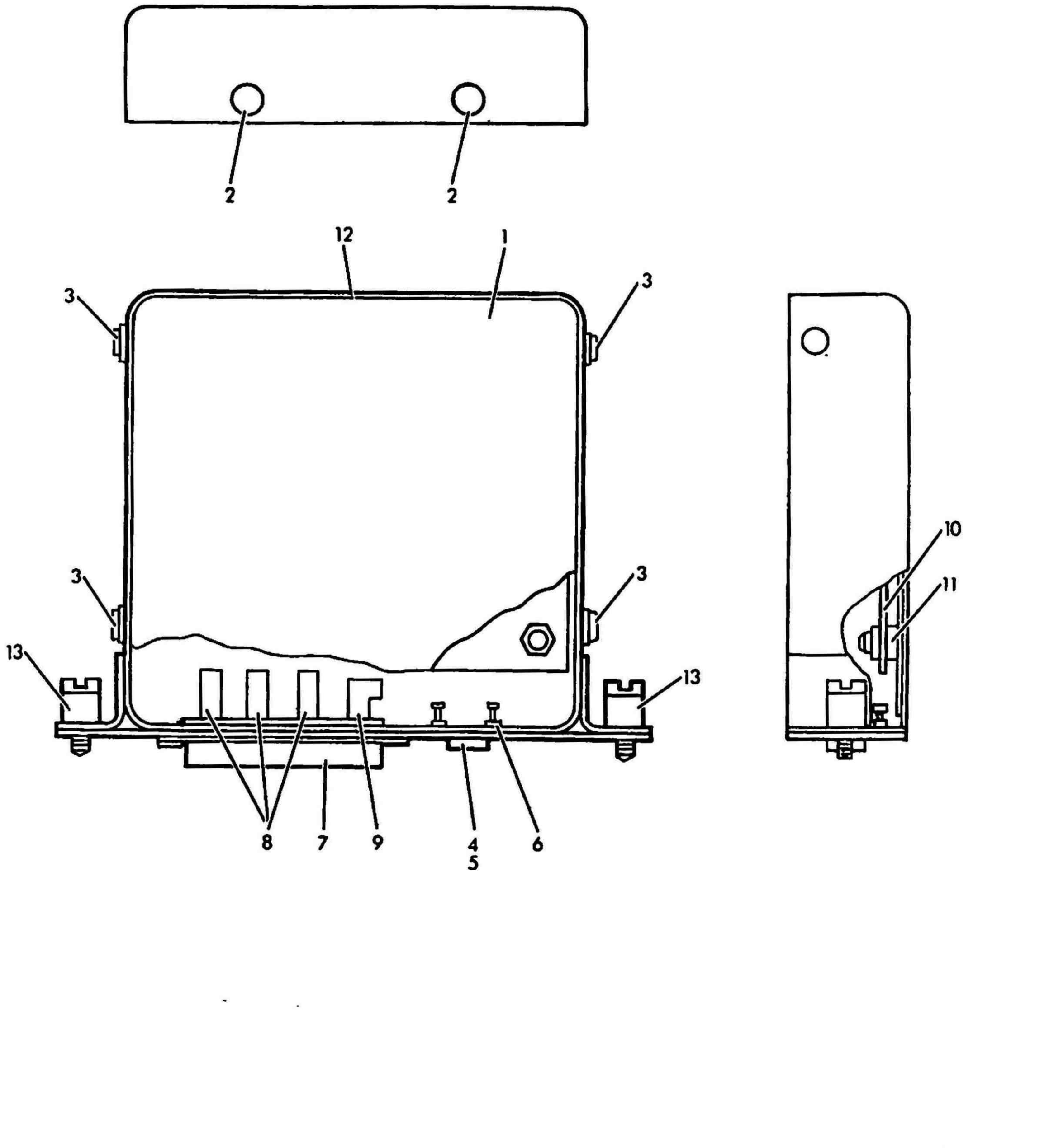

Figure 7-16. 1 MHZ, 3 MHZ Generator Module Assembly

FIGURE AND INDEX NO.	PART NUMBER	FSCM	DESCRIPTION 1 2 3 4 5 6 7	UNITS PER ASSY	USABLE ON CODE	SMR
16 -	22040-6210	14844	MODULE ASSEMBLY, GENERATOR, 1 MHZ, 3 MHZ (SEE FIGURE 1 FOR NHA)	REF		
-1	22055-6210-2	14844	. COVER	1		
-2	MS51959-12	96906	. SCREW	2		
-3	MS51957-12	96906	. SCREW	4		
	MS35338-78	96906	. WASHER	4		
-4	M38510-10701BXB	81349	. MICROCIRCUIT	1		
	MS51957-2	96906	. SCREW (AP)	2		
	MS35338-134	96906	. WASHER (AP)	2		
	MS35649-24	96906	. NUT (AP)	2		
-5	14176STD	14844	. ADAPTER, TRANSISTOR	1		
-6	SL289-304	12615	. TERMINAL, STUD	3		
-7	22790-6200-6	14844	. CONNECTOR, RECEPTACLE, ELECTRICAL	1		
	MS51957-4	96906	. SCREW (AP)	2		
	MS35338-134	96906	. WASHER (AP)	2		
	MS35649-24	96906	. NUT (AP)	2		
-8	22790-6200-9	14844	. CONNECTOR, PLUG	3		
-9	22790-6200-10	14844	. CONNECTOR, PLUG	1		
-10	22041-6210	14844	. BOARD ASSEMBLY, GENERATOR, 1 MHZ, 3 MHZ (SEE FIGURE 17 FOR BREAKDOWN)	1		
	MS51959-15	96906	. SCREW (AP)	4		
	MS35338-78	96906	. WASHER (AP)	4		
	MS15795-304	96906	. WASHER (AP)	4		
	MS21043-04	96906	. NUT (AP)	4		
-11	8209SS0440-7	06540	. STANDOFF, 4-40 X 1/8	4		
-12	22055-6210-1	14844	. HOUSING	1		
-13	FKN7900-8A1PL	08524	. . SCREW, CAPTIVE NO. 8-32	2		

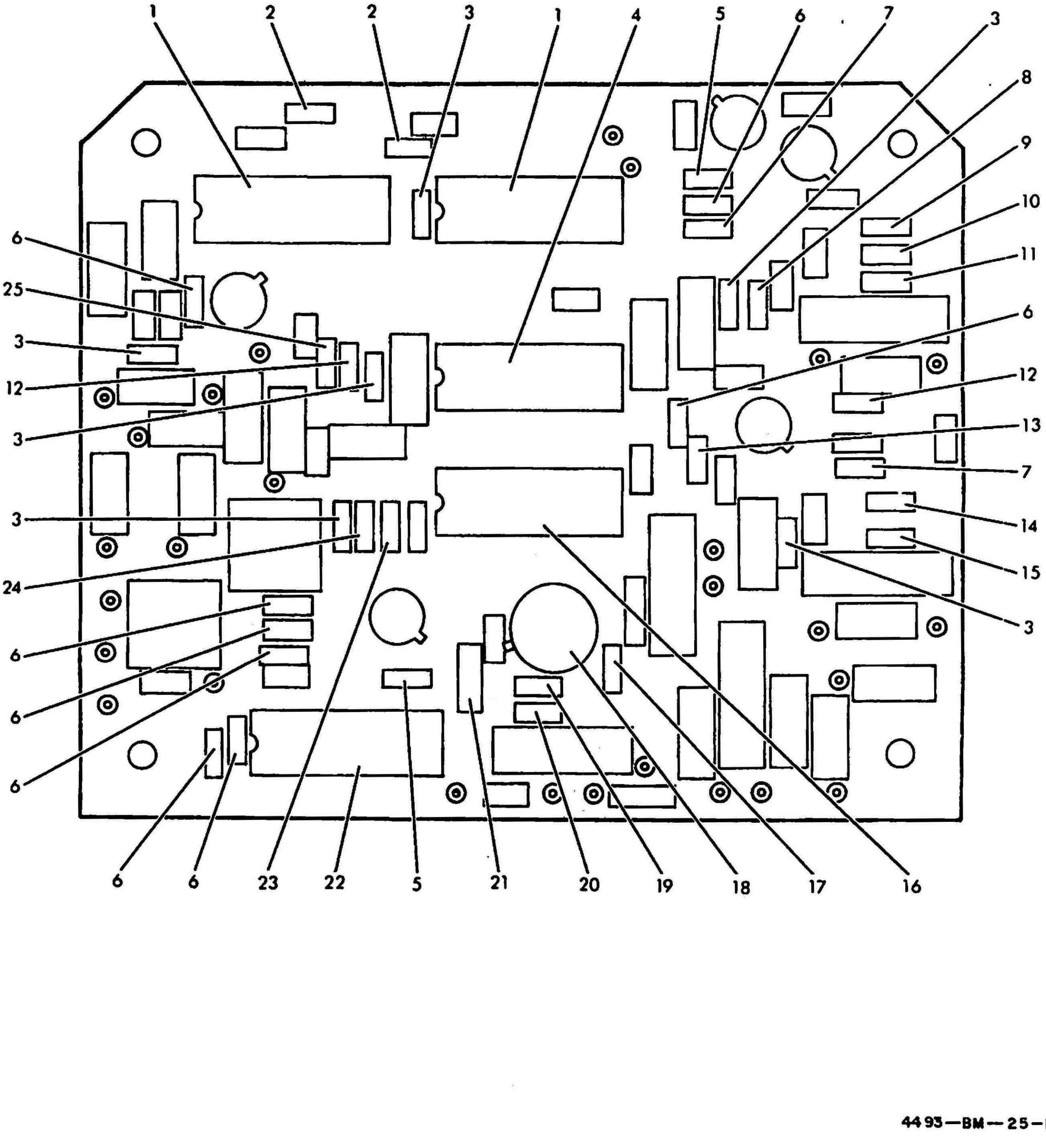

Figure 7-17. 1 MHZ, 3 MHZ Generator Board Assembly (Sheet 1 of 2)

FIGURE AND INDEX NO.	PART NUMBER	FSCM	DESCRIPTION 1 2 3 4 5 6 7	UNITS PER ASSY	USABLE ON CODE	SMR
17 -	22041-6210	14844	BOARD ASSEMBLY, GENERATOR MODULE 1MHZ, 3MHZ . (SEE FIGURE 16 FOR NHA)	REF		
17 /1 -1	M38510-30205BCB	81349	. MICROCIRCUIT	2		
17 /1 -2	RLR05C222JR	81349	. RESISTOR	2		
17 /1 -3	RLR05C472JR	81349	. RESISTOR	6		
17 /1 -4	M38510-31501BCB	81349	. MICROCIRCUIT	1		
17 /1 -5	RLR05C102JR	81349	. RESISTOR	2		
17 /1 -6	RLR05C103JR	81349	. RESISTOR	8		
17 /1 -7	RLR05C682JR	81349	. RESISTOR	2		
17 /1 -8	RLR05C123JR	81349	. RESISTOR	1		
17 /1 -9	RLR05C681JR	81349	. RESISTOR	1		
17 /1 -10	RLR05C332JR	81349	. RESISTOR	1		
17 /1 -11	RLR05C471JR	81349	. RESISTOR	1		
17 /1 -12	RLR05C101JR	81349	. RESISTOR	2		
17 /1 -13	RLR05C221GP	81349	. RESISTOR	1		
17 /1 -14	RLR05C391JR	81349	. RESISTOR	1		
17 /1 -15	RLR05C560JR	81349	. RESISTOR	1		
17 /1 -16	M38510-30102BCB	81349	. MICROCIRCUIT	1		
17 /1 -17	RLR05C182JR	81349	. RESISTOR	1		
17 /1 -18	M38510-10201BIB	81349	. MICROCIRCUIT	1		
17 /1 -19	RLR05C392JR	81349	. RESISTOR	1		
17 /1 -20	RLR05C362JR	81349	. RESISTOR	1		
17 /1 -21	RLR05C150JR	81349	. RESISTOR	1		
17 /1 -22	M38510-10403BEB	81349	. MICROCIRCUIT	1		
17 /1 -23	RLR05C151JR	81349	. RESISTOR	1		
17 /1 -24	RLR05C471JR	81349	. RESISTOR	1		
17 /1 -25	RLR05C821JR	81349	. RESISTOR	1		
17 /2 -26	JANTX2N2369A	81349	. TRANSISTOR	5		
17 /2 -27	CKR05BX103KR	81349	. CAPACITOR	8		
17 /2 -28	CKR05BX104KR	81349	. CAPACITOR	11		
17 /2 -29	MS18130-12	96906	. INDUCTOR	1		
17 /2 -30	MS18130-24	96906	. INDUCTOR	2		
17 /2 -31	MS18130-22	96906	. INDUCTOR	1		
17 /2 -32	JANTX1N4148	81349	. SEMICONDUCTOR DEVICE, DIODE	2		
17 /2 -33	CMR06F242JPDL	81349	. CAPACITOR	1		
17 /2 -34	CMR04F201JPDL	81349	. CAPACITOR (SELECTED).	2		
17 /2 -35	CMR06F182JPDL	81349	. CAPACITOR	1		
17 /2 -36	CMR04F***JPDL	81349	. CAPACITOR (SELECTED).	1		
17 /2 -37	CMR04F241JPDL	81349	. CAPACITOR	1		
17 /2 -38	MS18130-21	96906	. INDUCTOR	2		
17 /2 -39	CMR06F431JPDL	81349	. CAPACITOR (SELECTED).	1		
17 /2 -40	CMR06F222JPDL	81349	. CAPACITOR	1		
17 /2 -41	CSR13F685KM	81349	. CAPACITOR	1		
17 /2 -42	CKR06BX224KR	81349	. CAPACITOR	2		
17 /2 -43	CSR13D226KM	81349	. CAPACITOR	1		
17 /2 -44	CKR05BX102KR	81349	. CAPACITOR	1		
17 /2 -45	JANTX1N5711	81349	. SEMICONDUCTOR DEVICE, DIODE	1		
17 /2 -46	22727-6210	14844	. TRANSFORMER	2		
17 /2 -47	CMR04F271JPCL	81349	. CAPACITOR	2		
17 /2 -48	CMR04C180JPDL	81349	. CAPACITOR	1		
17 /2 -49	CMR04E470JPDL	81349	. CAPACITOR (SELECTED).	2		
17 /2 -50	MS18130-11	96906	. INDUCTOR	1		
17 /2 -51	MS18130-13	96906	. INDUCTOR	1		
17 /2 -52	CMR04F221JPDL	81349	. CAPACITOR	1		
17 /2 -53	5130STDTSD2	14844	. TERMINAL	27		
17 /2 -54	22050-6210	14844	. BOARD, PRINTED WIRING	1		

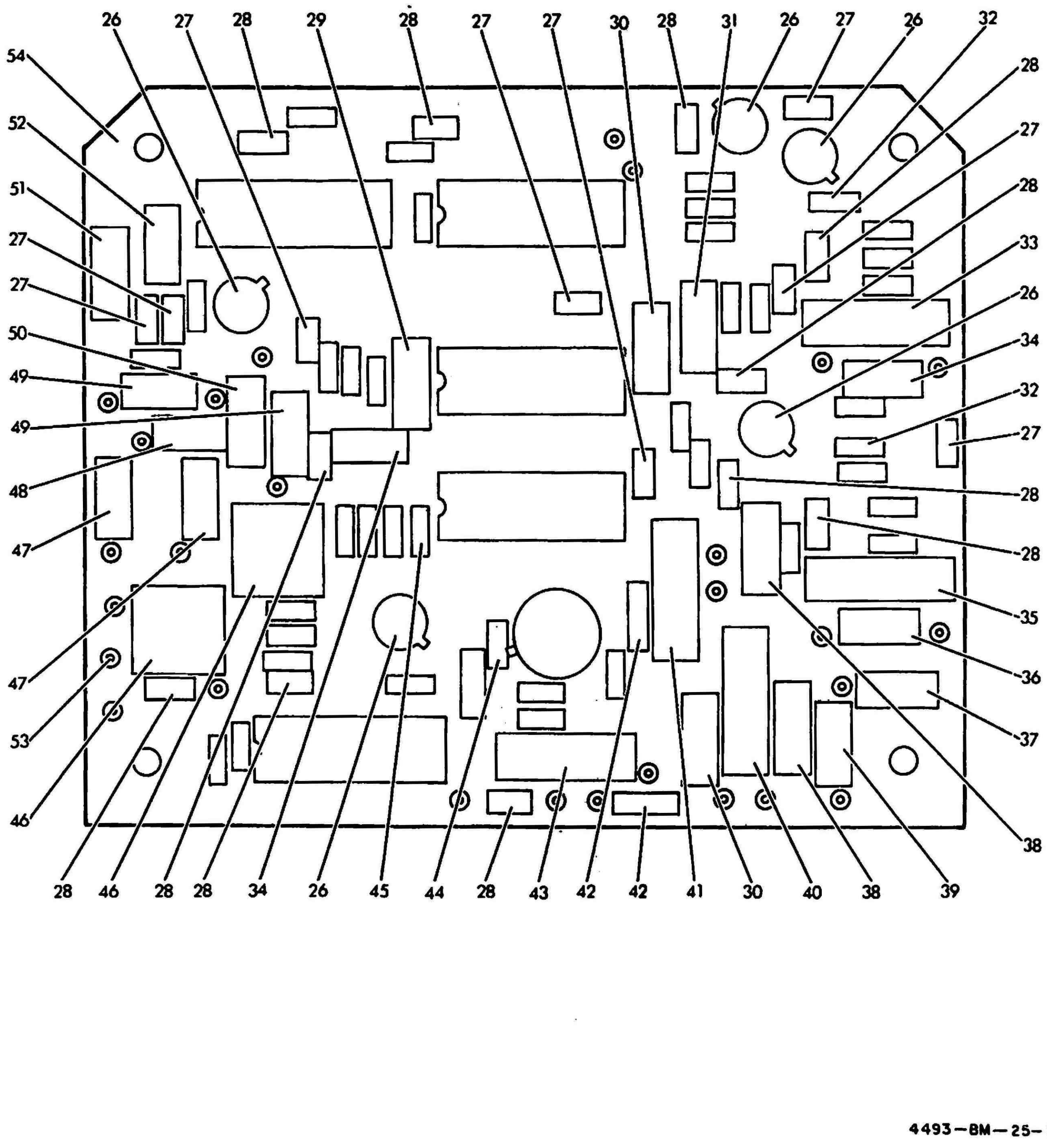

Figure 7-17. 1 MHZ, 3 MHZ Generator Board Assembly (Sheet 2 of 2)

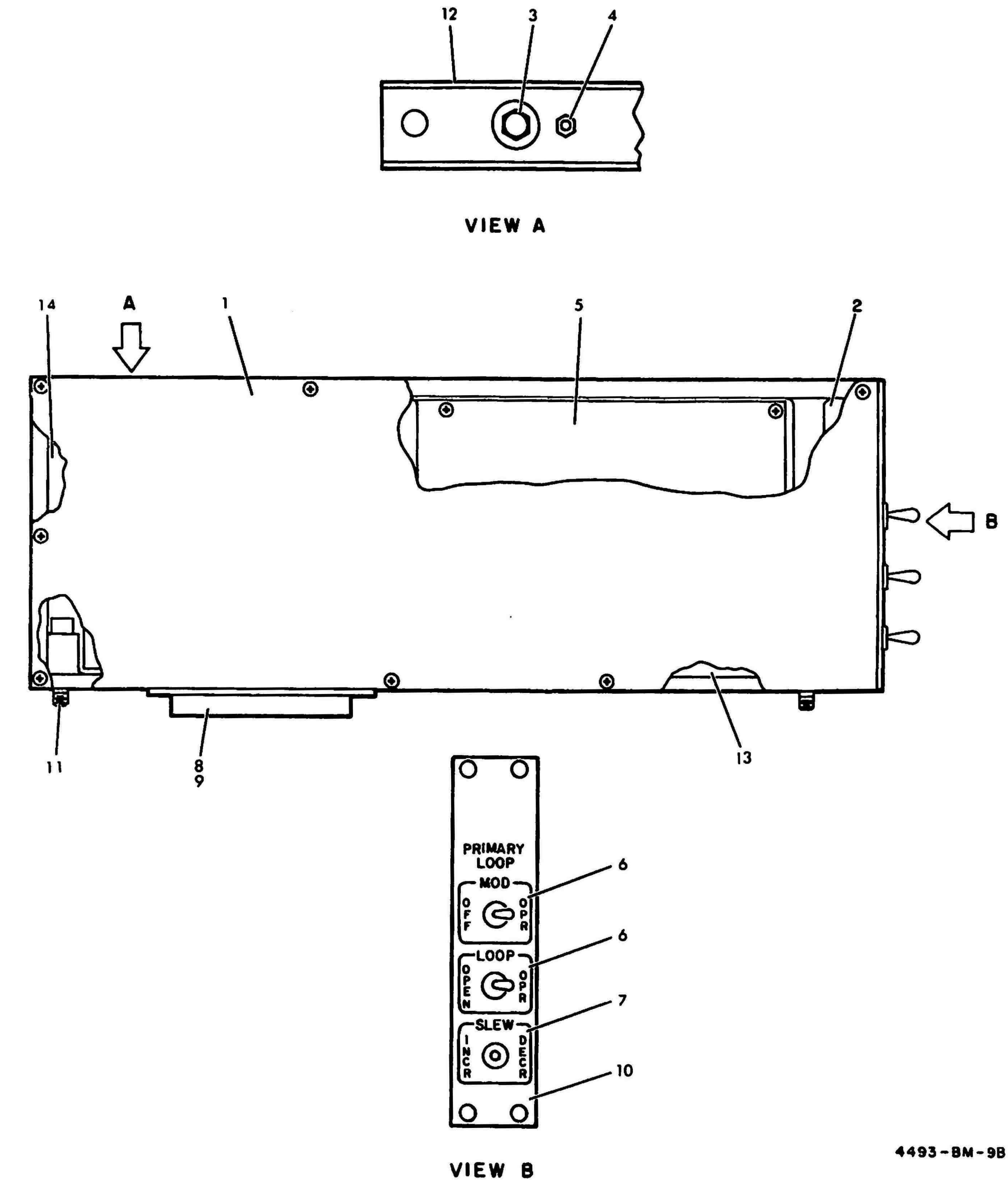

Figure 7-18. Primary Loop Module Assembly

FIGURE AND INDEX NO.		PART NUMBER	FSCM	DESCRIPTION 1 2 3 4 5 6 7	UNITS PER ASSY	USABLE ON CODE	SMR
18	-	21800-6203	14844	MODULE ASSEMBLY, PRIMARY LOOP (SEE FIGURE 1 . FOR NHA)	REF		
	-1	21813-6203-1	14844	. COVER, LEFTHAND	1		
		MS51959-2	96906	. SCREW (AP)	9		
	-2	21813-6203-2	14844	. COVER, RIGHTHAND	1		
		MS51959-2	96906	. SCREW (AP)	9		
	-3	RJR24FW203M	81349	. RESISTOR	1		
	-4	M39024-5-11	81349	. TERMINAL	1		
	-5	21881-6203	14844	. BOARD ASSEMBLY, PRIMARY LOOP (SEE FIGURE 19 FOR BREAKDOWN)	1		
		MS51959-1	96906	. SCREW (AP)	6		
	-6	22721-6200-3	14844	. SWITCH, TOGGLE, DPDT, LOCK LEVER	2		
	-7	22748-6200-1	14844	. SWITCH, TOGGLE, SPDT	1		
	-8	22790-6200-8	14844	. CONNECTOR, COMBINATION	1		
		MS51957-12	96906	. SCREW (AP)	2		
	-9	22790-6200-10	14844	. CONTACT, COAXIAL, PLUG, RIGHT ANGLE	4		
	-10	22812-6203-2	14844	. PANEL, FRONT	1		
		MS51959-4	96906	. SCREW (AP)	4		
	-11	21814-6203	14844	. STUD, MOUNTING, CAPTIVE	2		
	-12	22812-6203-1	14844	. BAR, UPPER	1		
	-13	22812-6203-3	14844	. BAR, LOWER	1		
	-14	22812-6203-4	14844	. BAR, REAR	1		

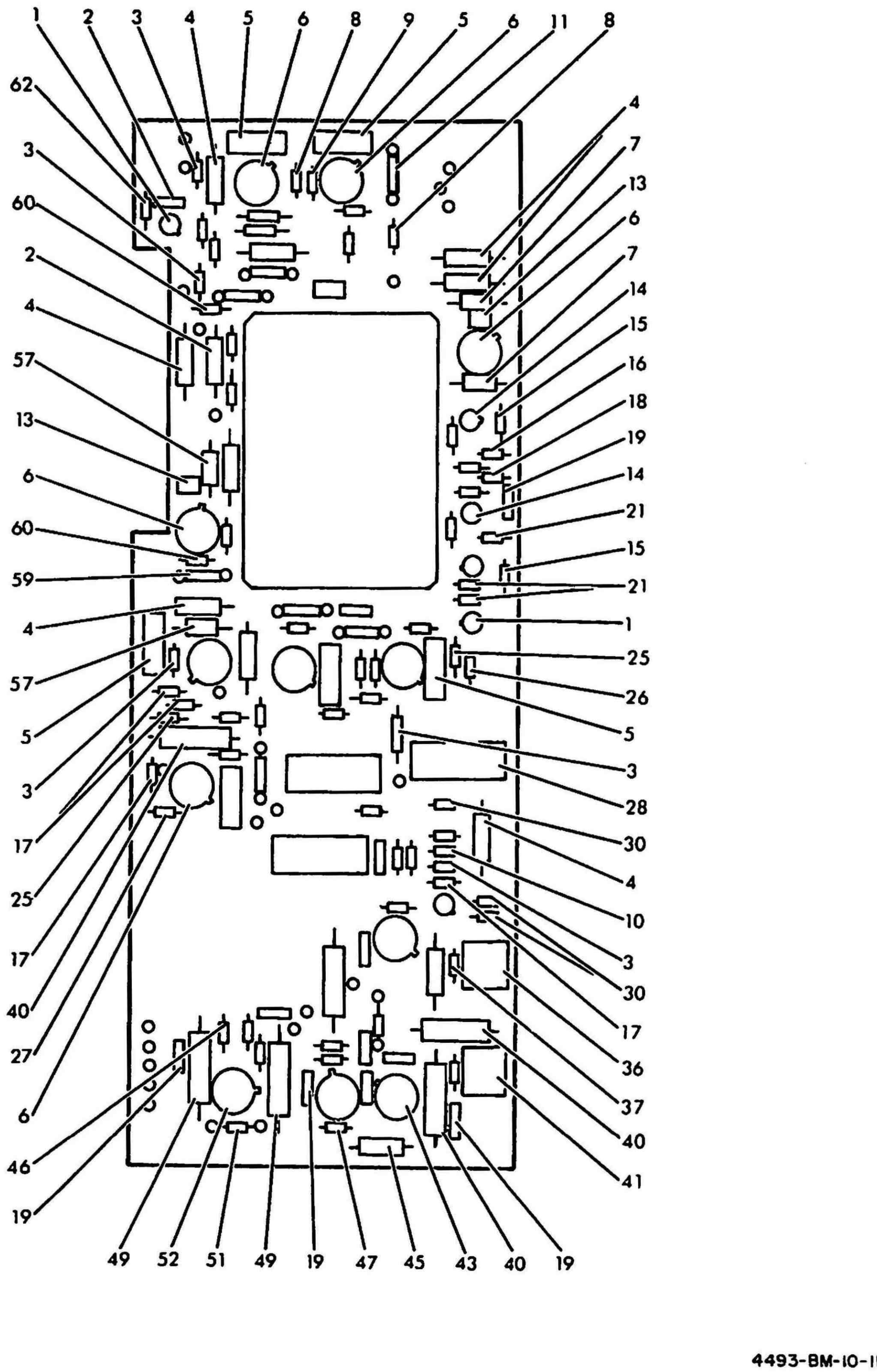

Figure 7-19. Primary Loop Board Assembly (Sheet 1 of 2)

FIGURE AND INDEX NO.	PART NUMBER	FSCM	DESCRIPTION 1 2 3 4 5 6 7	UNITS PER ASSY	USABLE ON CODE	SMR
19 -	21881-6203	14844	BOARD ASSEMBLY, PRIMARY LOOP (SEE FIGURE 18 . FOR NHA)	REF		
19 /1 -1	JANTX2N2222A	81349	. TRANSISTOR	2		
19 /1 -2	CKR06BX105KR	81349	. CAPACITOR	3		
19 /1 -3	RLR05C103JR	81349	. RESISTOR	11		
19 /1 -4	22773-6200-1	14844	. CAPACITOR	9		
19 /1 -5	CMR04E300JODL	81349	. CAPACITOR	6		
19 /1 -6	M38510-10104BGB	81349	. MICROCIRCUIT	8		
19 /2 -7	RNC55H2003FP	81349	. RESISTOR	4		
19 /2 -8	RLR05C202JR	81349	. RESISTOR	3		
19 /1 -9	RLR05C511JR	81349	. RESISTOR	1		
19 /1 -10	RLR05C223JR	81349	. RESISTOR	2		
19 /1 -11	RLR05C151JR	81349	. RESISTOR	1		
19 /2 -12	RJR26FX203M	81349	. RESISTOR	1		
19 /1 -13	CKR07BX330KR	81349	. CAPACITOR	2		
19 /1 -14	JANTX2N4416	81349	. TRANSISTOR	2		
19 /1 -15	RCR05G105KS	81349	. RESISTOR	3		
19 /1 -16	RCR05G224KP	81349	. RESISTOR	1		
19 /2 -17	JANTX1N4148	81349	. SEMICONDUCTOR DEVICE, DIODE	8		
19 /1 -18	RCR05G184KP	81349	. RESISTOR	1		
19 /1 -19	CKR05BX103KR	81349	. CAPACITOR	5		
19 /2 -20	RCR05G4R7KS	81349	. RESISTOR	1		
19 /1 -21	RLR05C512JR	81349	. RESISTOR	3		
19 /2 -22	21801-6203	14844	. INTEGRATOR ASSEMBLY	1		
19 /2 -23	JANTX2N2907A	81349	. TRANSISTOR	1		
19 /2 -24	RLR05C152JR	81349	. RESISTOR	1		
19 /1 -25	RLR05C1246P	81349	. RESISTOR	2		
19 /1 -26	RLR05C513JR	81349	. RESISTOR	1		
19 /1 -27	RLR05C153JR	81349	. RESISTOR	3		
19 /1 -28	M38510-30102BCB	81349	. MICROCIRCUIT	1		
19 /2 -29	M38510-02501BCB	81349	. MICROCIRCUIT	1		
19 /1 -30	RLR05C4726P	81349	. RESISTOR	4		
19 /2 -31	RLR05C1026P	81349	. RESISTOR	3		
19 /2 -32	RLR05C203JR	81349	. RESISTOR	1		
19 /2 -33	JANTX2N2369A	81349	. TRANSISTOR	1		
19 /2 -34	RLR05C563JR	81349	. RESISTOR	1		
19 /2 -35	M38510-10901BGB	81349	. MICROCIRCUIT	1		
19 /1 -36	RJR24FW203M	81349	. RESISTOR	1		
19 /1 -37	RLR05C822JR	81349	. RESISTOR	1		
19 /2 -38	22773-6200-3	14844	. CAPACITOR	1		
19 /2 -39	RLR05C392JR	81349	. RESISTOR	2		
19 /1 -40	CSR13D226KM	81349	. CAPACITOR	3		
19 /1 -41	RJR24FW502M	81349	. RESISTOR	1		
19 /2 -42	CKR06BX224KR	81349	. CAPACITOR	3		
19 /1 -43	M38510-10701BXB	81349	. MICROCIRCUIT	1		
19 /2 -44	CKR05BX102KR	81349	. CAPACITOR	1		
19 /1 -45	RWR80S330FM	81349	. RESISTOR	1		
19 /2 -46	RLR05C150JR	81349	. RESISTOR	1		
19 /1 -47	RLR05C182JR	81349	. RESISTOR	1		
19 /2 -48	M38510-10201BIB	81349	. MICROCIRCUIT	1		
19 /2 -49	CSR13F685KM	81349	. CAPACITOR	3		
19 /2 -50	RLR05C242JR	81349	. RESISTOR	1		
19 /1 -51	RLR05C272JR	81349	. RESISTOR (SELECTED)	2		
19 /1 -52	M38510-10202BIB	81349	. MICROCIRCUIT	1		
19 /2 -53	M38510-02701BCB	81349	. MICROCIRCUIT	1		
19 /2 -54	RLR05C154JP	81349	. RESISTOR	1		
19 /2 -55	RLR05C104JR	81349	. RESISTOR	3		
19 /2 -56	RLR05C393GP	81349	. RESISTOR	1		
19 /1 -57	RNC55H4003FP	81349	. RESISTOR	1		
19 /2 -58	RLR05C122GP	81349	. RESISTOR	1		
19 /2 -59	RLR05C510JR	81349	. RESISTOR	2		
19 /1 -60	RLR05C181JR	81349	. RESISTOR	2		
19 /2 -61	RLR05C131JR	81349	. RESISTOR	1		
19 /1 -62	RCR05G204KS	81349	. RESISTOR	1		
19 /2 -63	5130SCDTSD2	14844	. TERMINAL	50		
19 /2 -64	21810-6203	14844	. BOARD, PRINTED WIRING	1		

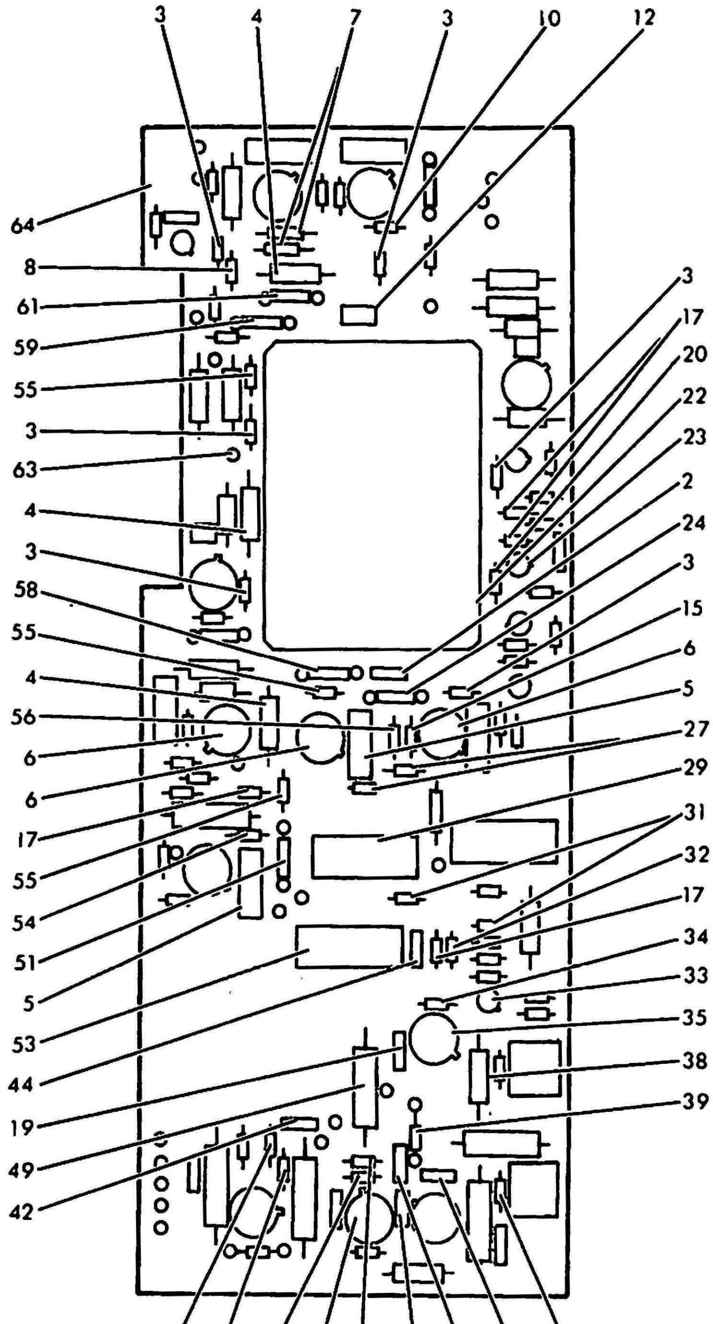

Figure 7-19. Primary Loop Board Assembly (Sheet 2 of 2)

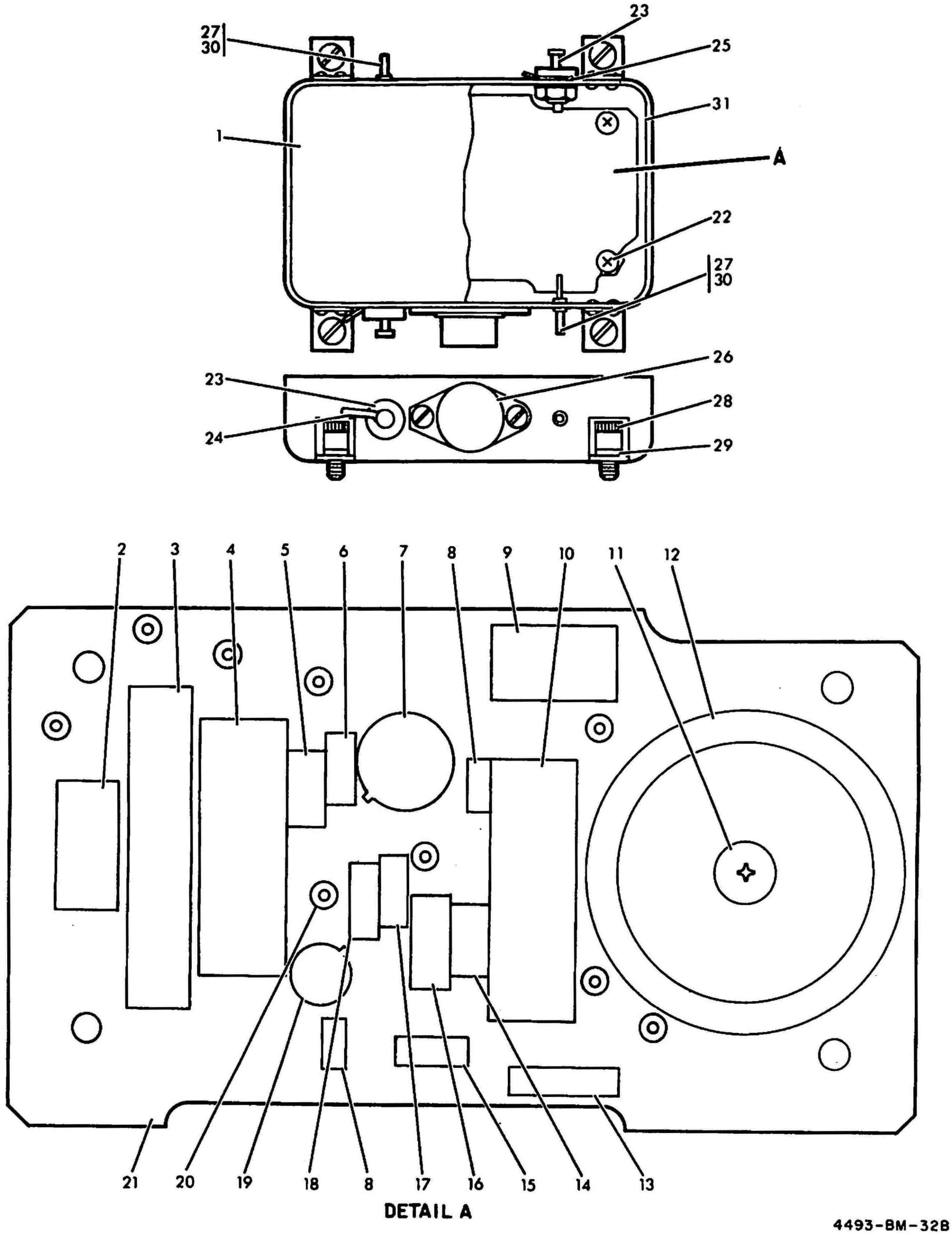

Figure 7-20. +5 VDC and +6 VDC Switching Regulator Module Assembly

FIGURE AND INDEX NO.		PART NUMBER	FSCM	DESCRIPTION 1 2 3 4 5 6 7	UNITS PER ASSY	USABLE ON CODE	SMR
20	-	22450-6216	14844	MODULE ASSEMBLY, SWITCHING REGULATOR, +5 VDC. (SEE FIGURE 1 FOR NHA)	REF	A	
		22530-6216	14844	MODULE ASSEMBLY, SWITCHING REGULATOR, +6 VDC. (SEE FIGURE 1 FOR NHA)	REF	B	
	-1	22465-6216-3	14844	. COVER	1	B	
		22465-6216-2	14844	. COVER	1	A	
		22451-6216	14844	. BOARD ASSEMBLY, SWITCHING REGULATOR, +5 VDC	1	A	
		22531-6219	14844	. BOARD ASSEMBLY, SWITCHING REGULATOR, +6 VDC	1	B	
		MS51957-12	96906	. SCREW (AP)	2		
		MS35338-135	96906	. WASHER (AP)	2		
		MS51959-15	96906	. SCREW (AP)	4		
		MS35338-135	96906	. WASHER (AP)	4		
		MS15795-304	96906	. WASHER (AP)	4		
		MS35649-244	96906	. NUT (AP)	4		
	-2	22728-6200R25	14844	. . INDUCTOR	1		
	-3	FM0125V3A	81349	. . FUSE	1		
	-4	CSR13F476KM	81349	. . CAPACITOR	1		
	-5	RNC55H4641FM	81349	. . RESISTOR	1		
	-6	RLR07C330JR	81349	. . RESISTOR	1		
	-7	JM38510-10201BIB	81349	. . MICROCIRCUIT	1	A	
	-8	CKR05BX104KR	81349	. . CAPACITOR	2		
	-9	JANTX1N5907	81349	. . SEMICONDUCTOR DEVICE, DIODE	1		
		JANTX1N5631A	81349	. . SEMICONDUCTOR DEVICE, DIODE	1	B	
	-10	CSR13C107KM	81349	. . CAPACITOR	1		
	-11	100-2	08289	. . RETAINER, TOROID COIL	1		
		MS51957-22	96906	. . SCREW (AP)	1		
	-12	22536-6219	14844	. . INDUCTOR	1		
	-13	RWR80SR301FM	81349	. . RESISTOR	1	A	
		RWR80SR750FM	81349	. . RESISTOR	1	B	
	-14	RNC55H1821FM	81349	. . RESISTOR	1		
		RNC55H1271FM	81349	. . RESISTOR	1	B	
	-15	RLR07C561JR	81349	. . RESISTOR	1		
	-16	RJR24FW102P	81349	. . RESISTOR	1		
	-17	RLR07C223JR	81349	. . RESISTOR	1		
	-18	RLR07C332JR	81349	. . RESISTOR	1		
	-19	JANTX2N2222A	81349	. . TRANSISTOR	1		
	-20	5130SCDTSD2	14844	. . TERMINAL	9		
	-21	22540-6219	14844	. . BOARD, PRINTED WIRING	1		
	-22	8209SS0440-7	06540	. STANDOFF	4		
	-23	M15733-49.0001	81349	. FILTER	2		
	-24	1496	83330	. LUG, TERMINAL	1		
	-25	1496	83330	. LUG, TERMINAL	1	B	
	-26	22761-6200	14844	. MICROCIRCUIT	1		
	-27	FTSM16P59	98291	. TERMINAL	2		
		22465-6216	14844	. HOUSING ASSEMBLY	1		
	-28	FKN7900-6A1PL	08524	. . SCREW, CAPTIVE	4		
	-29	22465-6216-5	14844	. . WASHER, FLAT	4		
	-30	4AS30WSSMODB	20093	. . SEAL, TERMINAL	2		
	-31	22465-6216-1	14844	. . CHASSIS	1		

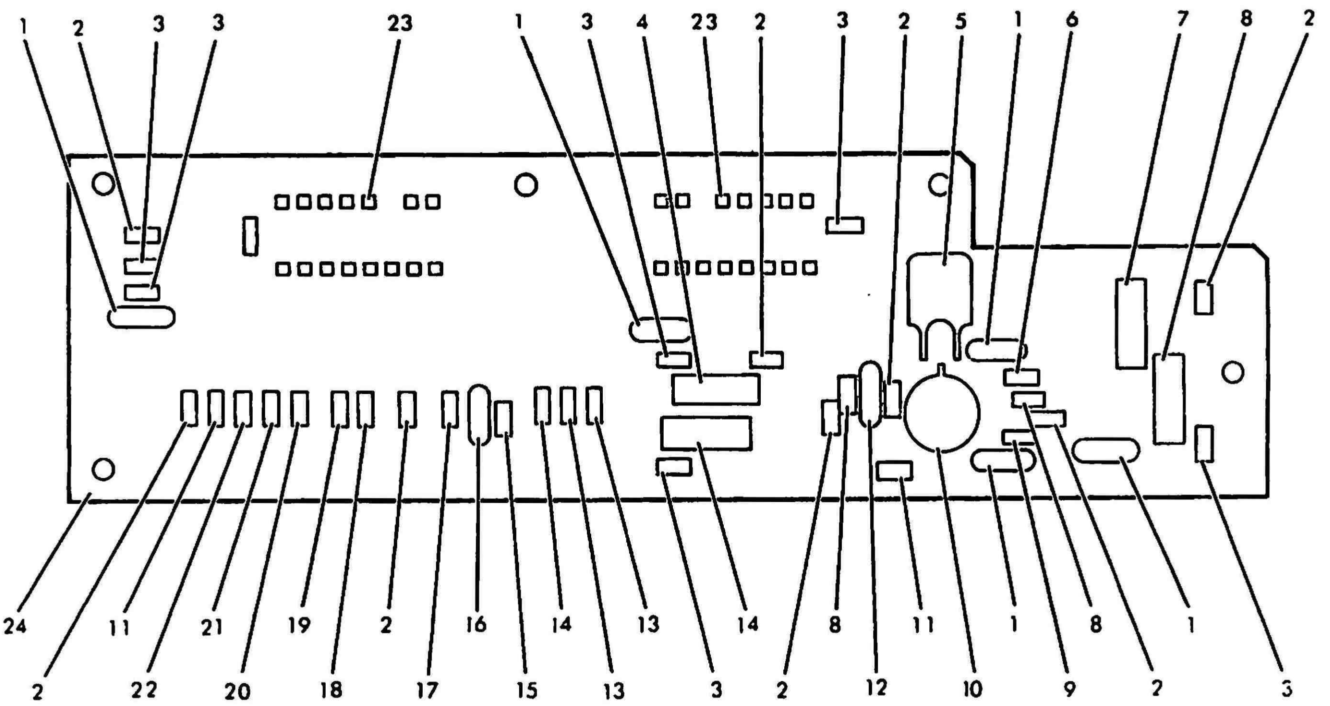

Figure 7-21. Meter Driver Board Assembly

FIGURE AND INDEX NO.		PART NUMBER	FSCM	DESCRIPTION 1 2 3 4 5 6 7	UNITS PER ASSY	USABLE ON CODE	SMR
21	-	22650-6225	14844	BOARD ASSEMBLY, METER DRIVER (SEE FIGURE 1 FOR NHA)	REF		
	-1	CKR05BX104KR	81349	. CAPACITOR	5		
	-2	RCR05G103KP	81349	. RESISTOR	8		
	-3	RCR05G104KP	81349	. RESISTOR	6		
	-4	CSR13D335KM	81349	. CAPACITOR	1		
	-5	CMR04E300JPDL	81349	. CAPACITOR	1		
	-6	RLR05C3916P	81349	. RESISTOR	1		
	-7	CSR13C335KM	81349	. CAPACITOR	1		
	-8	RCR05G101KS	81349	. RESISTOR	2		
	-9	RLR05C3916P	81349	. RESISTOR	1		
	-10	JM38510-10104BGB	81349	. MICROCIRCUIT	1		
	-11	RCR05G102KP	81349	. RESISTOR	2		
	-12	CKR05BX103KR	81349	. CAPACITOR	1		
	-13	RCR05G752K	81349	. RESISTOR	2		
	-14	RCR05G682KS	81349	. RESISTOR	1		
	-15	RCR05G223KS	81349	. RESISTOR	1		
	-16	JANTX1N758A	81349	. SEMICONDUCTOR DEVICE, DIODE	1		
	-17	RCR05G222KS	81349	. RESISTOR	1		
	-18	RCR05G184KS	81349	. RESISTOR	1		
	-19	RCR05G244KS	81349	. RESISTOR	1		
	-20	RCR05G114KS	81349	. RESISTOR	1		
	-21	RCR05G334KS	81349	. RESISTOR	1		
	-22	RCR05G473KP	81349	. RESISTOR	1		
	-23	75540-002	22526	. MINI-SERTS	32		
	-24	22660-6225	14844	. BOARD, PRINTED WIRING	1		

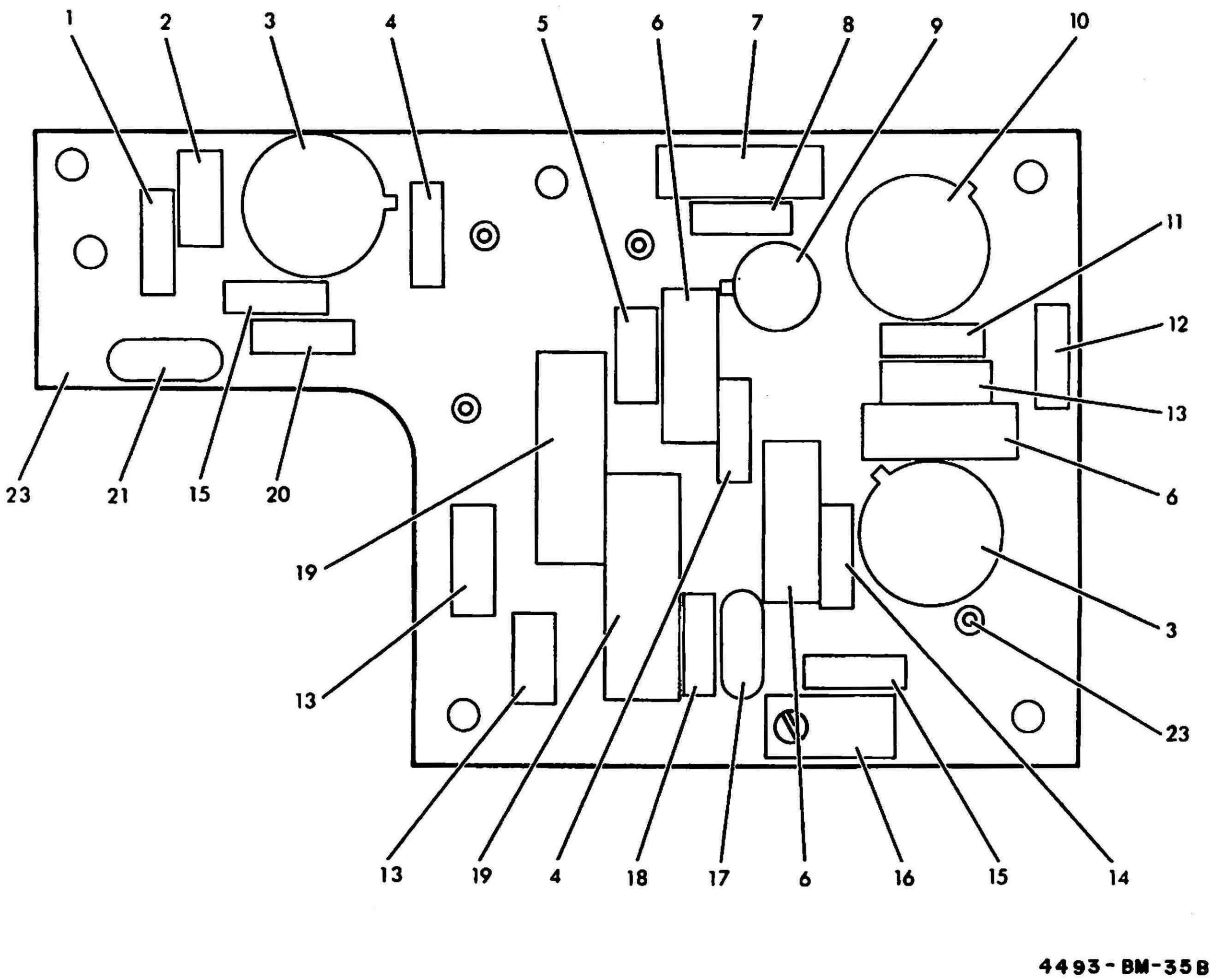

Figure 7-22. Electron Multiplier Board Assembly

FIGURE AND INDEX NO.		PART NUMBER	FSCM	DESCRIPTION 1 2 3 4 5 6 7	UNITS PER ASSY	USABLE ON CODE	SMR
22	-	22610-6223	14844	BOARD ASSEMBLY, ELECTRON MULTIPLIER (SEE FIGURE 1 FOR NHA) . .	REF		
	-1	RLR07C1036P	81349	. RESISTOR	1		
	-2	CKR05BX103KR	81349	. CAPACITOR	1		
	-3	M38510-10101BGB	81349	. MICROCIRCUIT	2		
	-4	RLR07C153JR	81349	. RESISTOR	2		
	-5	CKR06BX104KR	81349	. CAPACITOR	1		
	-6	CSR13G105KM	81349	. CAPACITOR	3		
	-7	RWR80S1780FM	81349	. RESISTOR	1		
	-8	RLR07C183JR	81349	. RESISTOR	1		
	-9	JANTX2N2222A	81349	. TRANSISTOR	1		
	-10	JANTX2N3507	81349	. TRANSISTOR	1		
	-11	RLR07C223JR	81349	. RESISTOR	1		
	-12	RLR07C101JR	81349	. RESISTOR	1		
	-13	JANTX1N4148	81349	. SEMICONDUCTOR DEVICE, DIODE	3		
	-14	RLR07C123JR	81349	. RESISTOR	1		
	-15	RLR07C104JR	81349	. RESISTOR	2		
	-16	RJR24HW103P	81349	. RESISTOR	1		
	-17	JANTX1N938B	81349	. SEMICONDUCTOR DEVICE, DIODE	1		
	-18	RLR07C272JR	81349	. RESISTOR	1		
	-19	CSR13G685KM	81349	. CAPACITOR	2		
	-20	RLR07C8226P	81349	. RESISTOR	1		
	-21	JANTX1N961B	81349	. SEMICONDUCTOR DEVICE, DIODE	1		
	-22	7830SCDTSD2	14844	. TERMINAL	4		
	-23	22620-6223	14844	. BOARD, PRINTED WIRING	1		

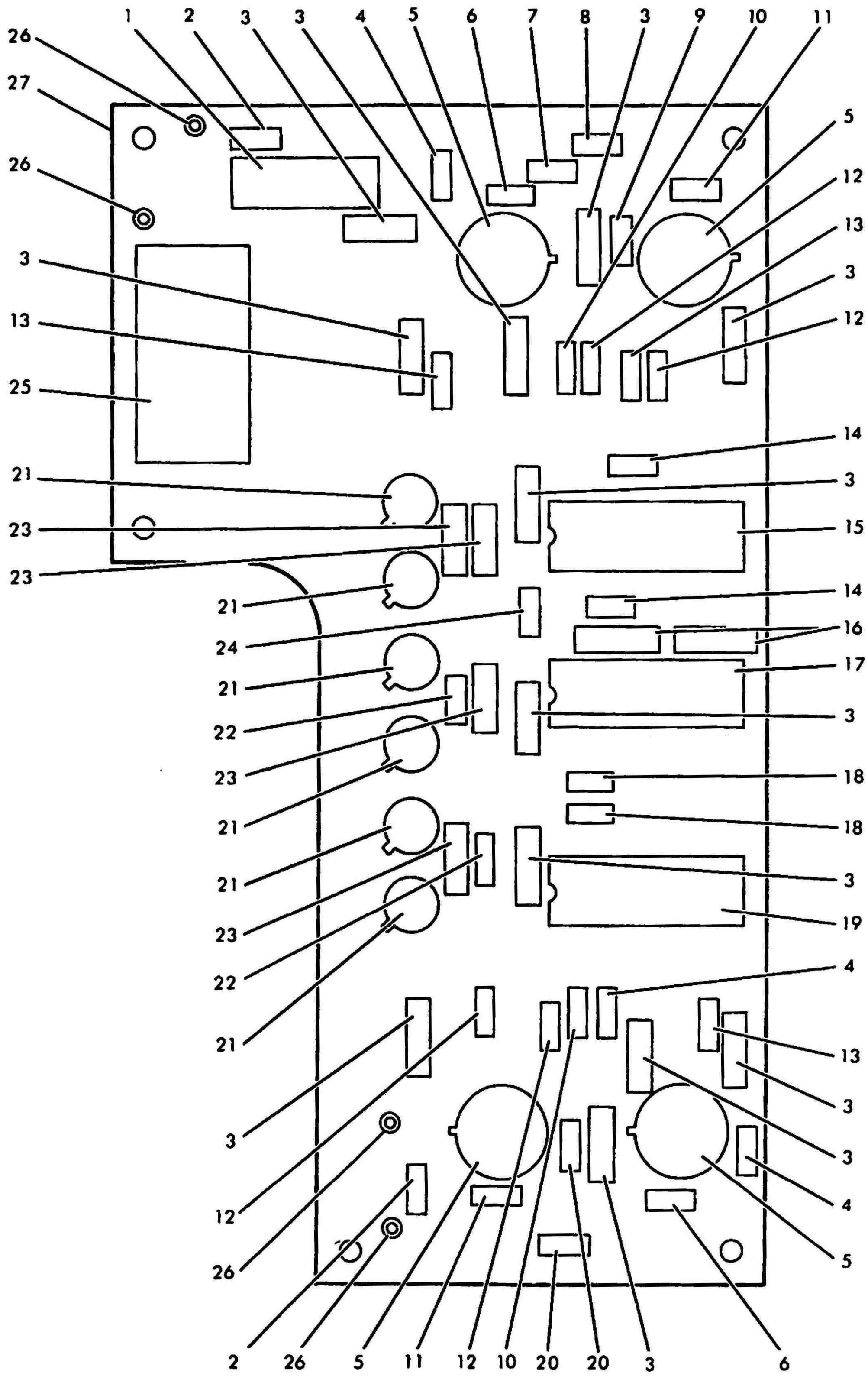

4493-BM-38B

Figure 7-23. Alarms Logic Board Assembly

FIGURE AND INDEX NO.		PART NUMBER	FSCM	DESCRIPTION 1 2 3 4 5 6 7	UNITS PER ASSY	USABLE ON CODE	SMR
23	-	22670-6226	14844	BOARD ASSEMBLY, LOGIC, ALARMS (SEE FIGURE 1 . FOR NHA)	REF		
	-1	CSR13F685KM	81349	. CAPACITOR	1		
	-2	RCR056104KS	81349	. RESISTOR	2		
	-3	CKR05BX104KR	81349	. CAPACITOR	12		
	-4	RCR056273KS	81349	. RESISTOR	3		
	-5	M38510-10101BCB	81349	. MICROCIRCUIT	4		
	-6	RCR056106KS	81349	. RESISTOR	2		
	-7	RCR056473KS	81349	. RESISTOR	1		
	-8	RCR056392KS	81349	. RESISTOR	1		
	-9	RCR056123KS	81349	. RESISTOR	1		
	-10	JANTX1N4148	81349	. SEMICONDUCTOR DEVICE, DIODE	2		
	-11	RCR056335KS	81349	. RESISTOR	2		
	-12	RCR056153KS	81349	. RESISTOR	4		
	-13	RCR056391KS	81349	. RESISTOR	3		
	-14	RCR056822KS	81349	. RESISTOR	2		
	-15	M38510-30102BCB	81349	. MICROCIRCUIT	1		
	-16	CMR04F391JPAL	81349	. CAPACITOR	2		
	-17	M38510-31004BCB	81349	. MICROCIRCUIT	1		
	-18	RCR056223KS	81349	. RESISTOR	2		
	-19	M38510-30008CB	81349	. MICROCIRCUIT	1		
	-20	RCR056222KS	81349	. RESISTOR	2		
	-21	JANTX2N2222A	81349	. TRANSISTOR	6		
	-22	RCR056332KS	81349	. RESISTOR	2		
	-23	RCR056271KS	81349	. RESISTOR	4		
	-24	RCR056472KS	81349	. RESISTOR	1		
	-25	75540-002	14844	. MINI-SERTS	16		
	-26	5130SCDTSD2	14844	. TERMINAL	4		
	-27	22680-6226	14844	. BOARD, PRINTED WIRING	1		

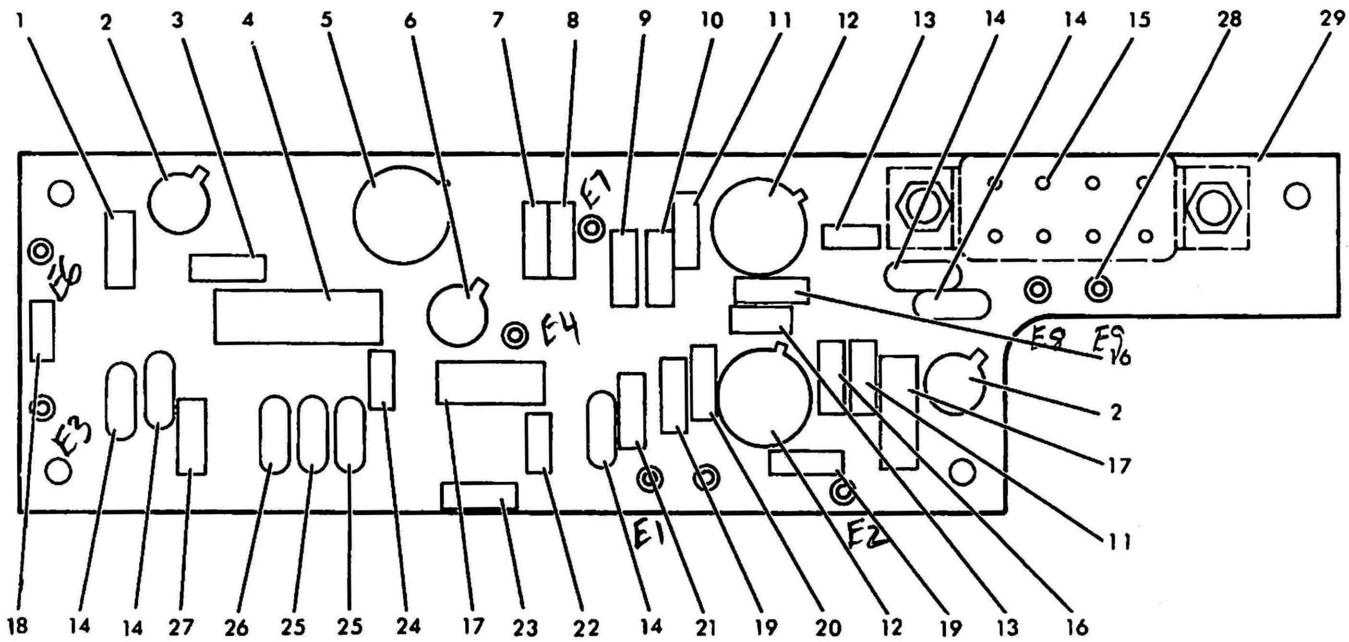

Figure 7-24. Vacion Regulator and Cesium Beam Interlock Board Assembly

FIGURE AND INDEX NO.	PART NUMBER	FSCM	DESCRIPTION 1 2 3 4 5 6 7	UNITS PER ASSY	USABLE ON CODE	SMR
24 -	22630-6224	14844	BOARD ASSEMBLY, VACION REGULATOR AND CESIUM BEAM INTERLOCK (SEE FIGURE 1 FOR NHA)	REF		
-1	RLR07C101JR	81349	. RESISTOR	1		
-2	JANTX2N2907A	81349	. TRANSISTOR	2		
-3	RLR07C183JR	81349	. RESISTOR	1		
-4	RWR89S1000FM	81349	. RESISTOR	1		
-5	JANTX2N3507	81349	. TRANSISTOR	1		
-6	JANTX2N2222A	81349	. TRANSISTOR	1		
-7	RCR0768R2	81349	. RESISTOR	1		
-8	RLR07C560JR	81349	. RESISTOR (SELECTED)	1		
-9	RCR076106JR	81349	. RESISTOR	1		
-10	RLR07C152JR	81349	. RESISTOR	1		
-11	RLR07C103JR	81349	. RESISTOR	2		
-12	JM38510-10104BGB	81349	. MICROCIRCUIT	2		
-13	CKR05BX102KR	81349	. CAPACITOR	2		
-14	JANTX1N4148	81349	. SEMICONDUCTOR DEVICE, DIODE	5		
-15	M5757-13-56	81349	. RELAY	1		
-16	RCR076105KS	81349	. RESISTOR	2		
-17	CSR13G105KM	81349	. CAPACITOR	2		
-18	CKR06BX104KR	81349	. CAPACITOR	1		
-19	RLR07C123JR	81349	. RESISTOR	2		
-20	RLR07C272JR	81349	. RESISTOR	1		
-21	RLR07G225JR	81349	. RESISTOR	1		
-22	CKR06BX105KR	81349	. CAPACITOR	1		
-23	RLR07C154	81349	. RESISTOR	1		
-24	CKR05BX104KR	81349	. CAPACITOR	1		
-25	JANTX1N754A	81349	. SEMICONDUCTOR DEVICE, DIODE	2		
-26	JANTX1N759A	81349	. SEMICONDUCTOR DEVICE, DIODE	1		
-27	RLR07C471JR	81349	. RESISTOR	1		
-28	5130SCDTSD2	14844	. TERMINAL	9		
-29	22640-6224	14844	. BOARD, PRINTED WIRING	1		

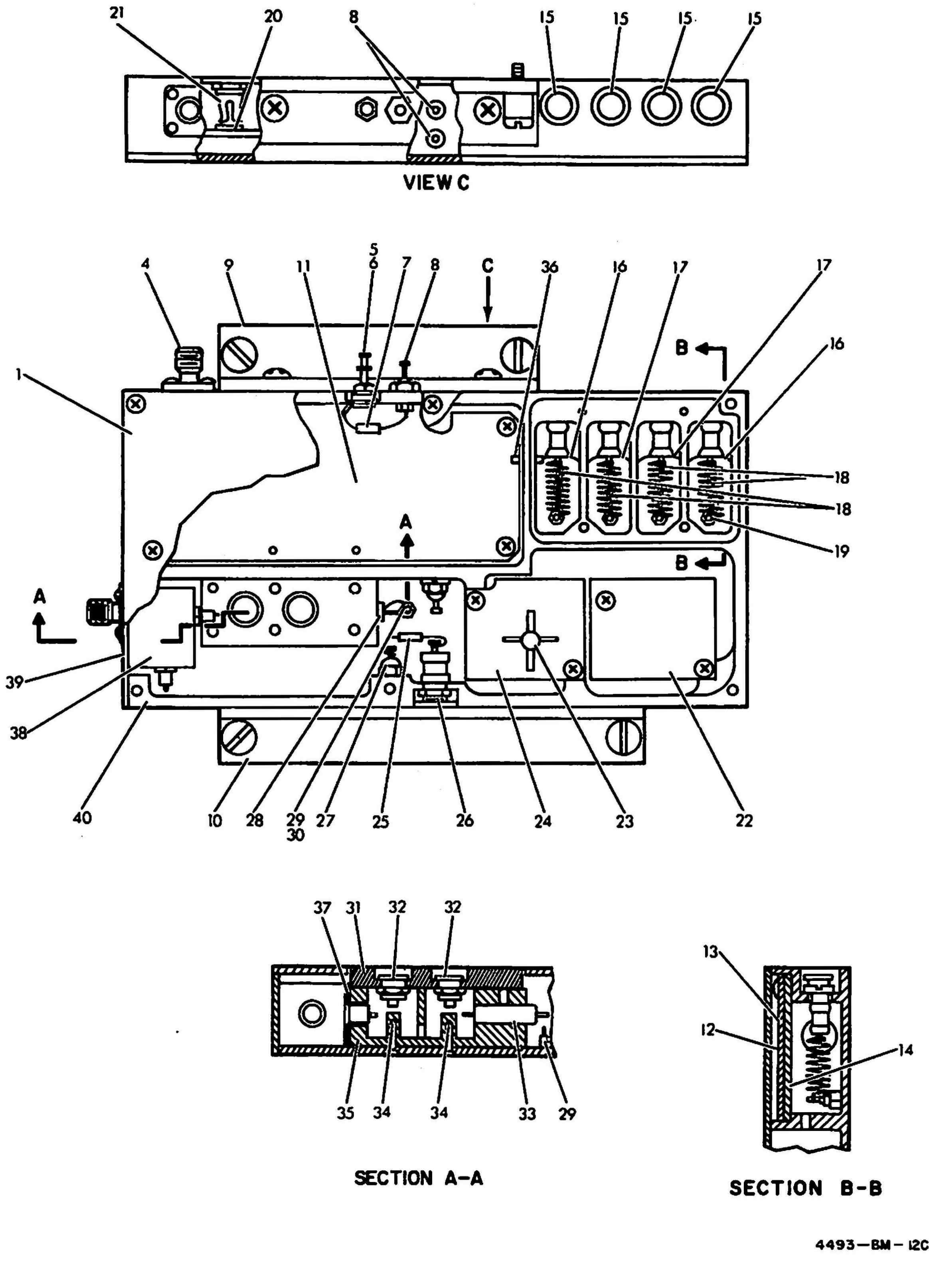

Figure 7-25. Times 630 Multiplier Module Assembly

FIGURE AND INDEX NO.		PART NUMBER	FSCM	DESCRIPTION 1 2 3 4 5 6 7	UNITS PER ASSY	USABLE ON CODE	SMR
25	-	21860-6205	14844	MODULE ASSEMBLY, MULTIPLIER, TIMES 630 (SEE . FIGURE 1 FOR NHA)	REF		
	-1	21875-6205-2	14844	. COVER, HOUSING	1		
	-2	MS51959-3	96906	. SCREW (AP)	6		
	-3	MS51960-2	96906	. SCREW (AP)	4		
	-4	22731-6200-2	14844	. CONNECTOR, RECEPTACLE, ELECTRICAL	1		
		MS51957-3	96906	. SCREW (AP)	4		
		MS35338-77	96906	. WASHER (AP)	4		
	-5	2051-2	71279	. TERMINAL, TURRET	1		
		MS35649-224	96906	. NUT (AP)	1		
	-6	341-2	79963	. TERMINAL, GROUNDING	1		
	-7	CSR13F685KM	81349	. CAPACITOR	1		
	-8	22752-6200	14844	. CAPACITOR	3		
	-9	21875-6205-4	14844	. ANGLE	1		
	-10	21875-6205-5	14844	. ANGLE	1		
		MS51957-42	96906	. SCREW (AP)	4		
		MS35338-137	96906	. WASHER (AP)	4		
	-11	21861-6205	14844	. BOARD ASSEMBLY, MULTIPLIER, TIMES 18 (SEE . FIGURE 26 FOR BREAKDOWN)	1		
		MS51957-2	96906	. SCREW (AP)	8		
		MS15795-802	96906	. WASHER (AP)	8		
		MS35338-77	96906	. WASHER (AP)	8		
	-12	21884-6205	14844	. COVER, CAVITY	1		
		MS51959-2	96906	. SCREW (AP)	4		
	-13	21886-6205	14844	. GASKET, RUBBER	1		
	-14	21887-6205	14844	. GASKET, R.F.	1		
	-15	22770-6200	14844	. CAPACITOR, VARIABLE	4		
	-16	21877-6205-2	14844	. CAPACITOR	2		
	-17	21877-6205-1	14844	. CAPACITOR	2		
	-18	21876-6205	14844	. INDUCTOR, AIR	4		
	-19	H3-396-1	12615	. TERMINAL, GROUNDING	4		
		MS51959-2	96906	. SCREW (AP)	4		
	-20	JANTX2N2222A	81349	. TRANSISTOR	1		
	-21	260-2TH18B	13103	. HEAT SINK	1		
		MS51959-2	96906	. SCREW (AP)	1		
	-22	21863-6205	14844	. BOARD ASSEMBLY, DUAL COMPENSATION, TIMES. . 18, TIMES 35 (SEE FIGURE 27 FOR BREAKDOWN)	1		
		MS51957-2	96906	. SCREW (AP)	2		
		MS15795-802	96906	. WASHER (AP)	2		
		MS35338-77	96906	. WASHER (AP)	2		
	-23	22779-6200	14844	. TRANSISTOR	1		
	-24	21862-6205	14844	. BOARD ASSEMBLY, AMPLIFIER, 262 MHZ (SEE . . FIGURE 28 FOR BREAKDOWN)	1		
		MS51957-2	96906	. SCREW (AP)	2		
		MS15795-802	96906	. WASHER (AP)	2		
		MS35338-77	96906	. WASHER (AP)	2		
	-25	MS75084-6	96906	. INDUCTOR	1		
	-26	22771-6200	14844	. CAPACITOR, VARIABLE	1		
	-27	22750-6200	14844	. CAPACITOR, STANDOFF	1		
	-28	22755-6200	14844	. THERMISTOR	1		
	-29	1491A9-11	15849	. TERMINAL, TURRET, INSULATED	2		
		MS51959-2	96906	. SCREW (AP)	2		
	-30	341-2	79963	. TERMINAL, GROUNDING	1		
	-31	21882-6205-2	14844	. COVER, TUNING	1		
		MS51959-4	96906	. SCREW (AP)	6		
	-32	22772-6200	14844	. CAPACITOR	2		
	-33	22746-6200	14844	. DIODE MODULE	1		
		MS51021-1	96906	. SETSCREW (AP)	2		
	-34	21883-6205	14844	. POST, KOVAR	2		
		MS51959-3	96906	. SCREW (AP)	2		
	-35	21882-6205-1	14844	. BLOCK	1		
		MS51959-3	96906	. SCREW (AP)	1		
	-36	FTSM16P59	98291	. TERMINAL, TEFLON	1		
	-37	21888-6205	14844	. GASKET	1		
	-38	21874-6205	14844	. CIRCULATOR, X-BAND	1		
		MS51959-2	96906	. SCREW (AP)	6		
	-39	21875-6205-3	14844	. PLATE	1		
		MS51959-2	96906	. SCREW (AP)	4		
	-40	21875-6205-1	14844	. HOUSING	1		

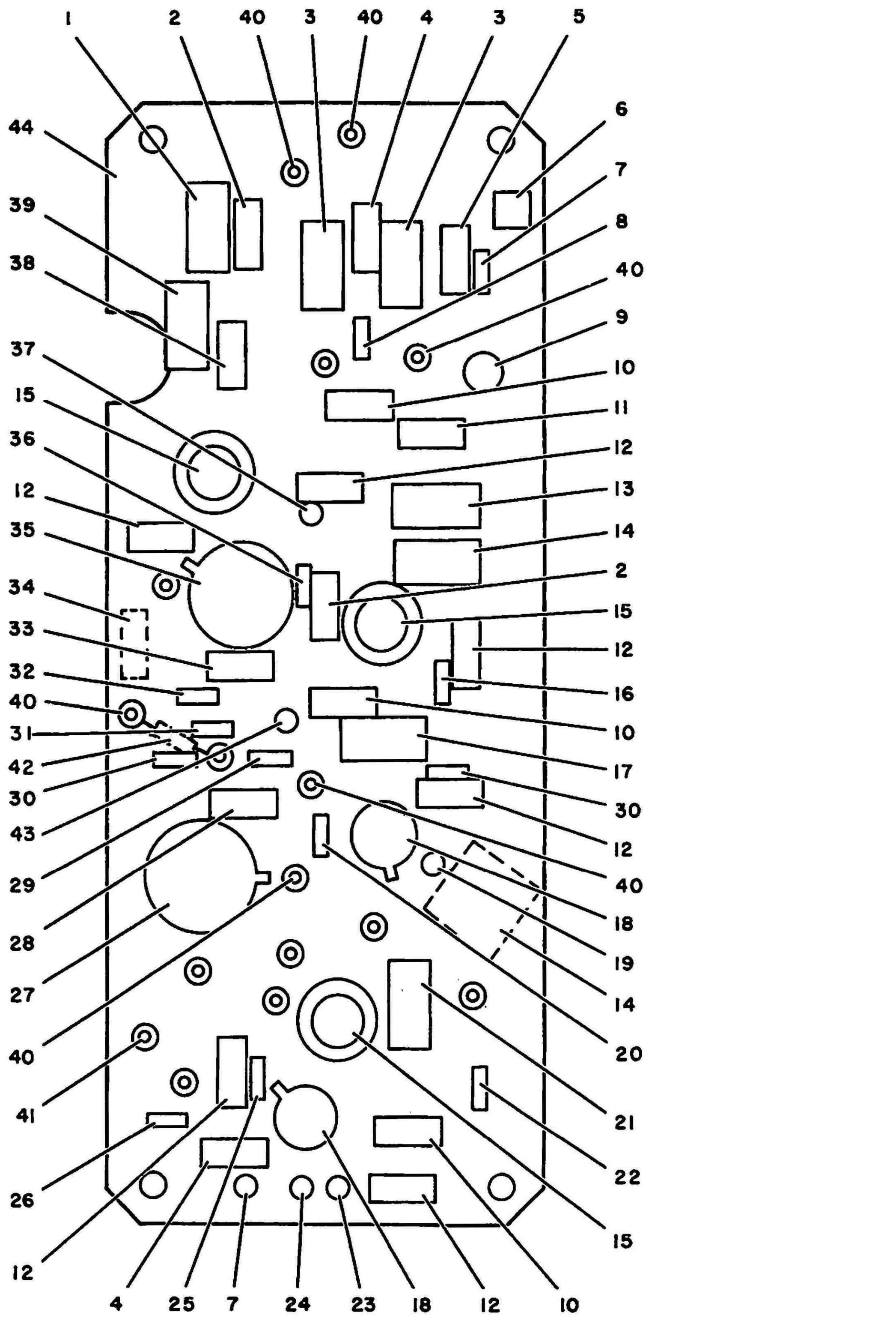

Figure 7-26. Times 18 Multiplier Board Assembly

FIGURE AND INDEX NO.	PART NUMBER	FSCM	DESCRIPTION 1 2 3 4 5 6 7	UNITS PER ASSY	USABLE ON CODE	SMR
26 -	21861-6205	14844	BOARD ASSEMBLY, MULTIPLIER TIMES 18 (SEE FIGURE 25 FOR NHA)	REF		
-1	CMR04E750J0DL	81349	. CAPACITOR	1		
-2	MS75084-13	96906	. INDUCTOR	2		
-3	CMR04E121J0DL	81349	. CAPACITOR	2		
-4	CKR05BX103KR	81349	. CAPACITOR	2		
-5	22777-6200	14844	. SEMICONDUCTOR DEVICE, DIODE	1		
-6	CY830361K	81349	. CAPACITOR	1		
-7	RLR05C102JR	81349	. RESISTOR	2		
-8	RLR05C271JR	81349	. RESISTOR	1		
-9	22754-6200	14844	. CAPACITOR	1		
-10	MS75083-9	96906	. CHOKE	3		
-11	MS75083-3	96906	. INDUCTOR	1		
-12	CKR05BX102KR	81349	. CAPACITOR	6		
-13	CMR04E360J0DL	81349	. CAPACITOR	1		
-14	CMR04E240J0DL	81349	. CAPACITOR	2		
-15	22759-6200	14844	. CAPACITOR	3		
-16	RLR05C103JR	81349	. RESISTOR	1		
-17	CMR04C100J0DL	81349	. CAPACITOR	1		
-18	JANTX2N918	81349	. TRANSISTOR	2		
-19	RLR05C152JR	81349	. RESISTOR	1		
-20	RLR05C4R7JR	81349	. RESISTOR	1		
-21	CMR04E430J0DL	81349	. CAPACITOR	1		
-22	RLR05C102JR	81349	. RESISTOR	1		
-23	RLR05C472JR	81349	. RESISTOR	1		
-24	RLR05C912JR	81349	. RESISTOR	1		
-25	RLR05C201JR	81349	. RESISTOR	1		
-26	RLR05C820JR	81349	. RESISTOR	1		
-27	JM38510-10201BIB	81349	. MICROCIRCUIT	1		
-28	CKR05BX471KR	81349	. CAPACITOR	1		
-29	RNC55H7R87FP	81349	. RESISTOR	1		
-30	RLR05C682JR	81349	. RESISTOR	2		
-31	RLR05C392JR	81349	. RESISTOR	1		
-32	RLR05C101JR	81349	. RESISTOR	1		
-33	JANTX1N914	81349	. SEMICONDUCTOR DEVICE, DIODE	1		
-34	RLR07C270JR	81349	. RESISTOR (SELECTED)	1		
-35	JANTX2N3866	81349	. TRANSISTOR	1		
-36	RLR05C562JR	81349	. RESISTOR	1		
-37	RLR05C272JR	81349	. RESISTOR	1		
-38	MS75083-7	96906	. INDUCTOR	1		
-39	CMR04E470J0DL	81349	. CAPACITOR	1		
-40	5130SCDTFS2	14844	. TERMINAL, METAL	6		
-41	5130SCDTSS2	14844	. TERMINAL, METAL	10		
-42	CSR13F105KL	81349	. CAPACITOR	1		
-43	RLR05C222JR	81349	. RESISTOR	1		
-44	21871-6205	14844	. BOARD, PRINTED WIRING	1		

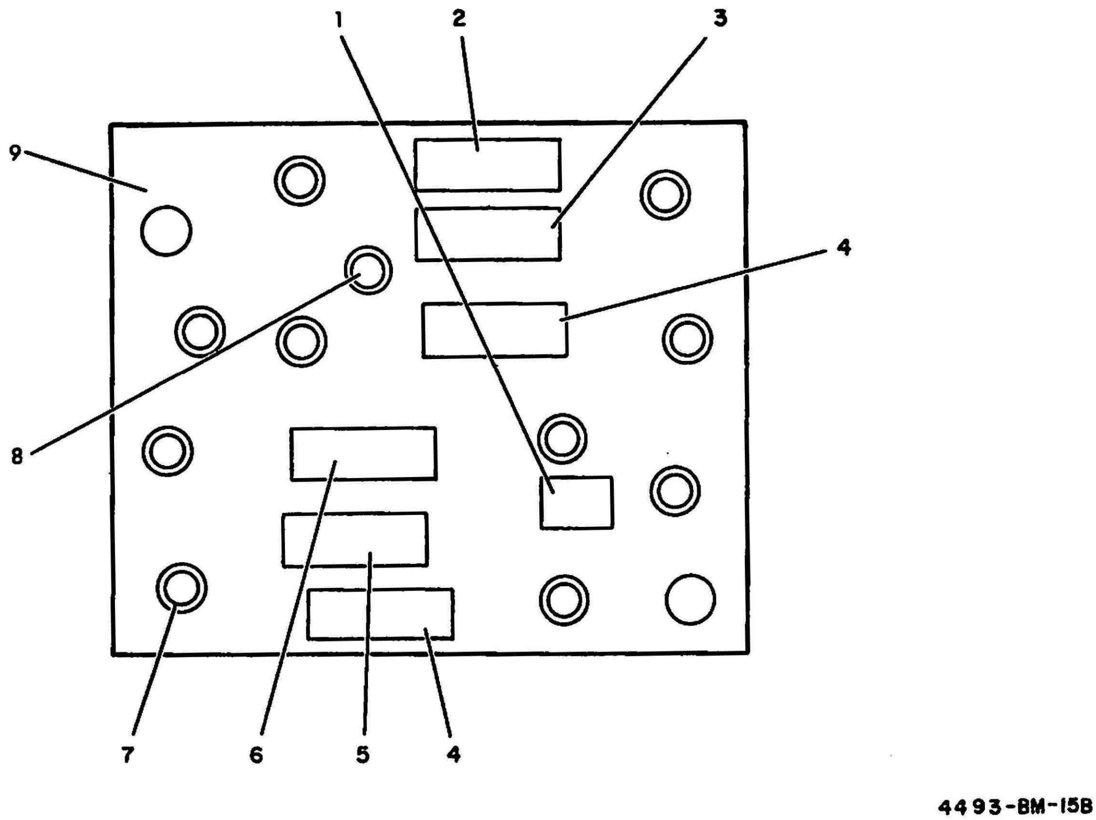

Figure 7-27. Dual Compensation Board Assembly

FIGURE AND INDEX NO.		PART NUMBER	FSCM	DESCRIPTION 1 2 3 4 5 6 7	UNITS PER ASSY	USABLE ON CODE	SMR
27	-	21863-6205	14844	BOARD ASSEMBLY, DUAL COMPENSATION, TIMES 18,. TIMES 35 (SEE FIGURE 25 FOR NHA)	REF		
	-1	22755-6200	14844	. THERMISTOR	1		
	-2	RLR07C272JR	81349	. RESISTOR (SELECTED)	1		
	-3	RLR07C102JR	81349	. RESISTOR (SELECTED)	1		
	-4	RLR07C222JR	81349	. RESISTOR (SELECTED)	2		
	-5	RLR07C221JR	81349	. RESISTOR (SELECTED)	1		
	-6	RLR07C123JR	81349	. RESISTOR (SELECTED)	1		
	-7	5130SCDTSD2	14844	. TERMINAL	10		
	-8	7830SCDTSS2	14844	. TERMINAL	1		
	-9	21873-6205	14844	. BOARD, PRINTED WIRING	1		

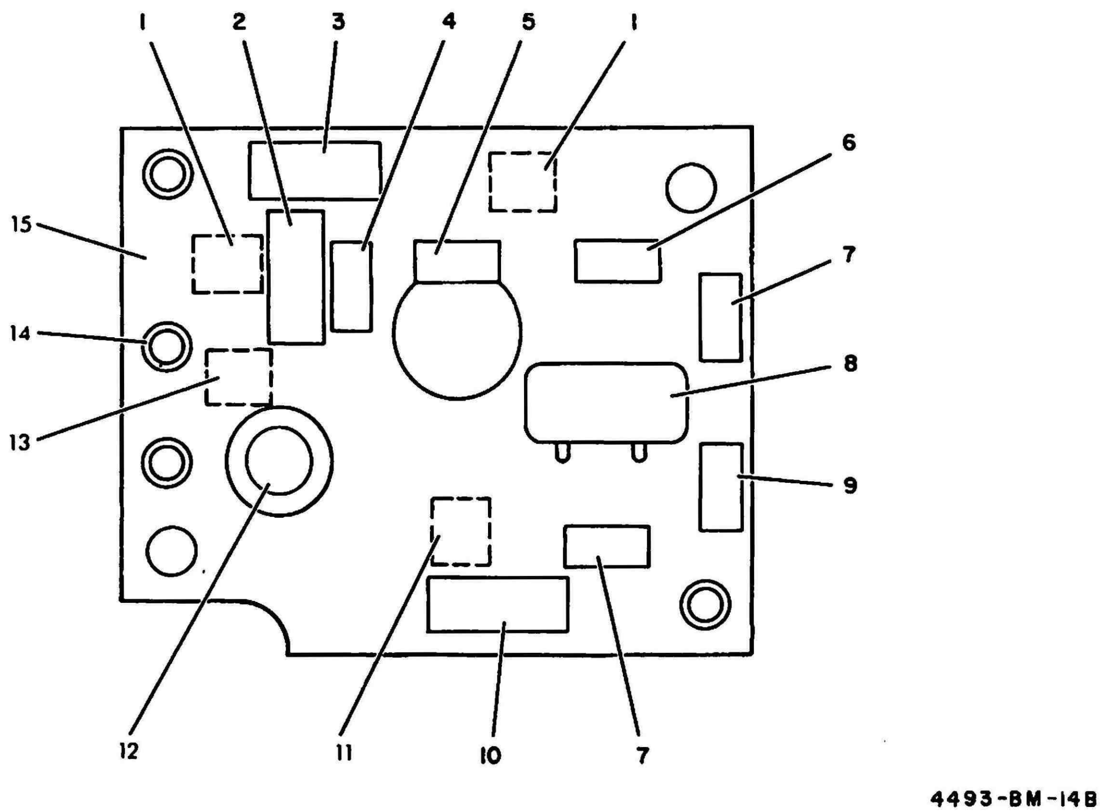

Figure 7-28. 262 MHZ Amplifier Board Assembly

FIGURE AND INDEX NO.		PART NUMBER	FSCM	DESCRIPTION 1 2 3 4 5 6 7	UNITS PER ASSY	USABLE ON CODE	SMR
28	-	21862-6205	14844	BOARD ASSEMBLY, AMPLIFIER, 262 MHZ (SEE . . . FIGURE 25 FOR NHA)	REF		
	-1	CY83D361K	81349	. CAPACITOR	2		
	-2	22758-6200	14844	. CHOKE	1		
	-3	MS75083-10	96906	. CHOKE	1		
	-4	RLR05C272JR	81349	. RESISTOR	1		
	-5	RLR05C222JR	81349	. RESISTOR	1		
	-6	RLR05C271JR	81349	. RESISTOR	1		
	-7	RLR05C471JR	81349	. RESISTOR	2		
	-8	CMR04E470J0DL	81349	. CAPACITOR	1		
	-9	RLR05C8R2JR	81349	. RESISTOR	1		
	-10	RLR07C270JR	81349	. RESISTOR	1		
	-11	CY83D461K	81349	. CAPACITOR	1		
	-12	22754-6200	14844	. CAPACITOR	1		
	-13	CY83D4R3C	81349	. CAPACITOR	1		
	-14	5130SCDTSD2	14844	. TERMINAL	4		
	-15	21872-6205	14844	. BOARD, PRINTED WIRING	1		

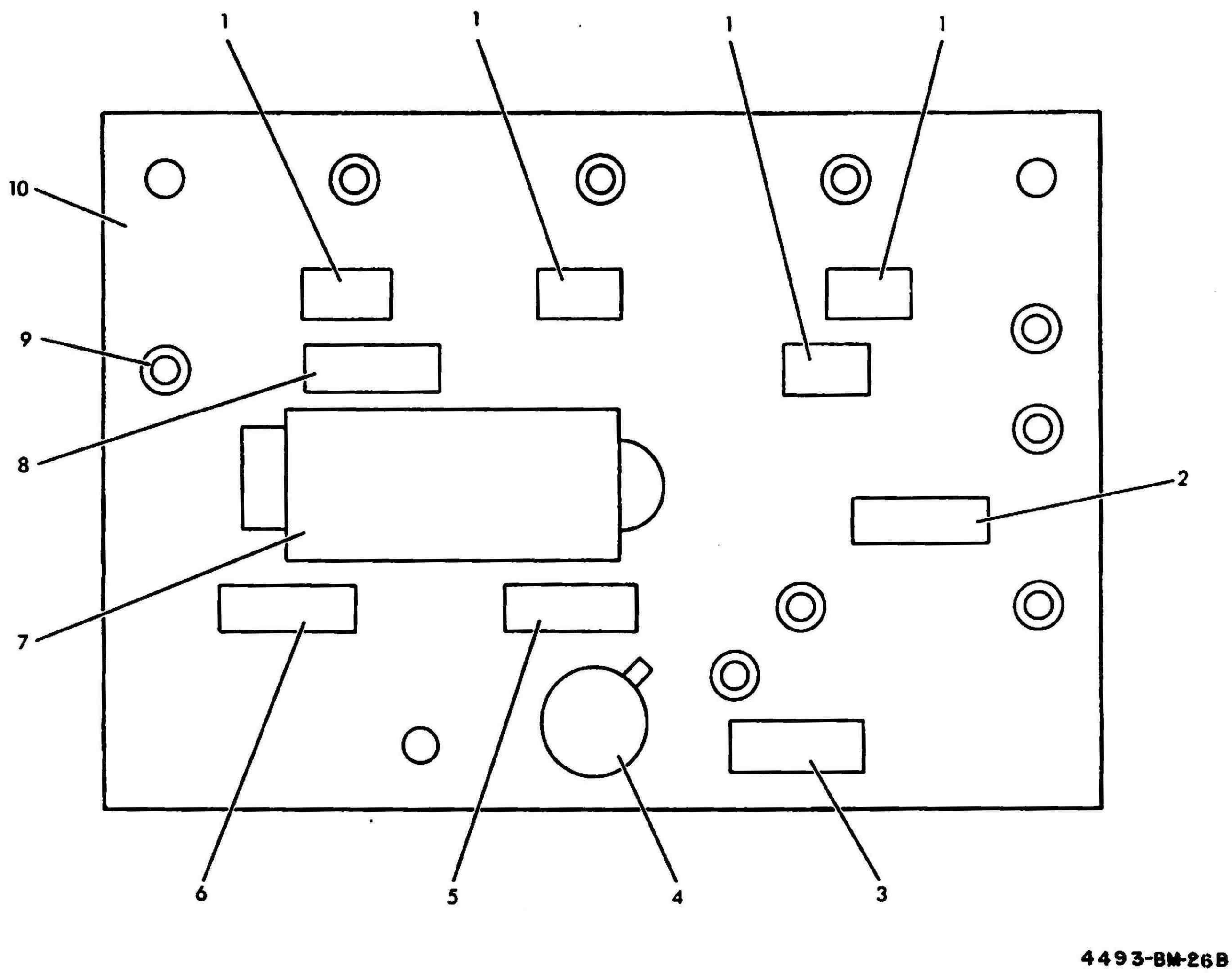

Figure 7-29. Power Supply Regulator Board Assembly

FIGURE AND INDEX NO.		PART NUMBER	FSCM	DESCRIPTION 1 2 3 4 5 6 7	UNITS PER ASSY	USABLE ON CODE	SMR
29	-	22070-6211	14844	BOARD ASSEMBLY, REGULATOR, POWER SUPPLY (SEE. FIGURE 1 FOR NHA)	REF		
	-1	JANTX1N5615	81349	. SEMICONDUCTOR DEVICE, DIODE	4		
	-2	RCR076102KS	81349	. RESISTOR	1		
	-3	RCR076151KS	81349	. RESISTOR	1		
	-4	JANTX2N2222A	81349	. TRANSISTOR	1		
	-5	RCR076223KS	81349	. RESISTOR	1		
	-6	RCR07G103KS	81349	. RESISTOR	1		
	-7	CSR13E476KM	81349	. CAPACITOR	1		
	-8	RCR076331KS	81349	. RESISTOR	1		
	-9	5130SJDTSD2	14844	. TERMINAL	10		
	-10	22080-6200	14844	. BOARD, PRINTED WIRING	1		

SECTION III
NUMERICAL INDEX

PART NUMBER	FIGURE AND INDEX NO.	QTY PER END ITEM	SMR
AN507C440-16	F 1 -108	8	
AN515C32	1 -113	2	
AN960C3	F 7 -35	2	
CKR05BX102KR	9 -12	14	
	13 -12		
	15 -2		
	17 -44		
	19 -44		
	24 -13		
	26 -12		
CKR05BX103KR	6 -21	50	
	9 -4		
	13 -3		
	14 -1		
	15 -4		
	17 -27		
	19 -19		
	21 -12		
	22 -2		
	26 -4		
CKR05BX104KL	3 -1	3	
CKR05BX104KM	4 -1	13	
CKR05BX104KR	13 -2	44	
	14 -10		
	15 -6		
	17 -28		
	F 17 -28	REF	
	20 -8		
	21 -1		
	23 -3	REF	
	24 -24		
CKR05BX471KR	26 -28	1	
CKR05BX562KR	14 -8	2	
CKR06BX102KR	14 -14	2	
CKR06BX103KR	14 -19	1	
CKR06BX104KR	11 -10	22	
	14 -4		
	22 -5		
CKR06BX105KR	1 -136	6	
	15 -10		
	19 -2		
	24 -22		
CKR06BX224KR	15 -3	7	
	17 -42		
	19 -42		
CKR06BX474KR	14 -11	2	
CKR07BX330KR	19 -13	2	
CL65BH151MPE	11 -27	2	
CMR04C100J0DL	26 -17	1	
CMR04C120J0DL	14 -25	2	
CMR04C180JPDL	17 -48	1	
CMR04E***J0DL	13 -9	3	

PART NUMBER	FIGURE AND INDEX NO.	QTY PER END ITEM	SMR
	13 -13		
	13 -29		
CMR04EXXXJ0DL	14 -24	2	
	14 -26		
CMR04E121J0DL	26 -3	2	
CMR04E200J0DL	13 -6	1	
CMR04E240J0DL	26 -14	2	
CMR04E300JPDL	21 -5	1	
CMR04E300J0DL	19 -5	6	
CMR04E360J0DL	26 -13	1	
CMR04E430J0DL	13 -8	2	
	26 -21		
CMR04E470JPDL	17 -49	2	
CMR04E470J0DL	14 -23	4	
	26 -39		
	28 -8		
CMR04E560J0DL	13 -32	1	
CMR04E620J0DL	13 -7	1	
CMR04E750J0DL	13 -28	2	
	26 -1		
CMR04F***JPDL	17 -36	1	
CMR04F101J0DL	13 -30	1	
CMR04F121J0DML	14 -12	1	
CMR04F151J0DL	13 -31	3	
	14 -13		
CMR04F201JPDL	17 -34	2	
CMR04F221JPDL	17 -52	1	
CMR04F241JPDL	17 -37	1	
CMR04F271JPCL	17 -47	2	
CMR04F271J0CL	13 -20	2	
CMR04F331J0AL	13 -27	1	
CMR04F391JPAL	23 -16	2	
CMR04F391J0AL	13 -18	2	
CMR06F182JPDL	17 -35	1	
CMR06F222JPDL	17 -40	1	
CMR06F242JPDL	17 -33	1	
CMR06F431JPDL	17 -39	1	
CMR06F471J0AL	13 -19	1	
CMR06F561J0DL	13 -26	1	
CSR13C107KM	20 -10	1	
CSR13C335KM	21 -7	1	
CSR13C475KM	13 -25	1	
CSR13D226KM	17 -43	4	
	19 -40		
CSR13D335KM	9 -13	4	
	13 -23		
	21 -4		
CSR13E476KM	29 -7	1	
CSR13F105KL	26 -42	1	
CSR13F226KM	13 -15	6	
	14 -17		
CSR13F476KM	9 -27	2	

PART NUMBER	FIGURE AND INDEX NO.	QTY PER END ITEM	SMR
	20 -4		
CSR13F685KM	4 -7	19	
	13 -24		
	15 -1		
	17 -41		
	19 -49		
	23 -1		
	25 -7		
	25 -8		
CSR13G105KM	9 -1	9	
	11 -18		
	22 -6	REF	
	24 -17		
CSR13G476KM	7 -27	1	
CSR13G685KM	22 -19	2	
CSR13H335KM	9 -19	1	
CW123	1 -98	6	
CXR06BX104KR	1 -39	1	
CXR06BX332KR	1 -60	1	
CY83D361K	26 -6	3	
	28 -1		
CY83D4R3C	28 -13	1	
CY83D461K	28 -11	1	
C5130SCDTSD2	14 -63	37	
C7830SCDTSD2	3 -4	24	
DCM8W8P	12 -13	1	
DMS3741-5059	12 -14	8	
DM53743-5073	1 -131	5	
DM53743-5076	1 -130	3	
D20418-2	12 -15	2	
D20419	1 -122	6	
	1 -127		
	1 -129		
D20419-16	1 -16	4	
	1 -144		
FHN26G2	1 -157	4	
FKN7900-6A1PL	20 -28	4	
FKN7900-8A1PL	8 -22	4	
	16 -13		
FKN79000-8A1PL	10 -11	2	
FM0125V3A	20 -3	1	
FM04-125V3A	6 -32	2	
	11 -28		
FT-SM16P59	25 -36	1	
FTSM16P59	20 -27	2	
F02B125V4A	1 -155	2	
F02B250V2A	1 -156	3	
H492-3	1 -86	1	
JANTX1N3893	1 -139	5	
JANTX1N4148	1 -43	50	
	1 -61		
	6 -5		
	7 -9		
	11 -2		
	13 -17		
	14 -16		
	15 -8		
	17 -32		
	19 -17		
	22 -13		
	23 -10		

PART NUMBER	FIGURE AND INDEX NO.	QTY PER END ITEM	SMR
	24 -14		
JANTX1N5615	6 -23	18	
	9 -18		
	29 -1		
JANTX1N5631A	F 20 -9	1	
JANTX1N5641A	11 -25	1	
JANTX1N5711	17 -45	1	
JANTX1N5809	7 -33	1	
JANTX1N5907	20 -9	1	
JANTX1N6092	1 -74	2	
JANTX1N6093	1 -75	2	
JANTX1N6094	1 -73	9	
	2 -11		
JANTX1N749A	11 -11	1	
JANTX1N752A	6 -4	7	
	6 -40		
	9 -2		
	11 -8		
JANTX1N754A	24 -25	2	
JANTX1N758A	15 -9	2	
	21 -16		
JANTX1N759A	24 -26	1	
JANTX1N914	26 -33	1	
JANTX1N938B	7 -18	3	
	11 -20		
	22 -17		
JANTX1N961B	22 -21	1	
JANTX1N965B	9 -20	1	
JANTX1N968B	6 -39	2	
	11 -1		
JANTX1N970B	6 -30	1	
JANTX2N2219A	6 -22	5	
	9 -10		
	11 -6		
	12 -7		
	15 -44		
JANTX2N2222A	6 -17	29	
	7 -31		
	9 -6		
	11 -23		
	14 -9		
	15 -11		
	19 -1		
	20 -19		
	22 -9		
	23 -21		
	24 -6		
	25 -20		
	29 -4		
JANTX2N2369A	13 -5	21	
	14 -5		
	17 -26		
	19 -33		
JANTX2N2905A	6 -29	4	
	7 -37		
	9 -9		
JANTX2N2907A	6 -34	10	
	7 -3		
	9 -30		
	11 -22		
	19 -23		

PART NUMBER	FIGURE AND INDEX NO.	QTY PER END ITEM	SMR
	24 -2		
JANTX2N3507	11 -5	3	
	22 -10		
	24 -5		
JANTX2N3866	26 -35	1	
JANTX2N4416	19 -14	2	
JANTX2N5664	1 -27	4	
	7 -1		
	8 -7		
	8 -11		
JANTX2N918	26 -18	2	
JM38510-10101B6B	6 -8	8	
	11 -14		
	14 -43		
	15 -37		
JM38510-10101BLB	7 -11	6	
JM38510-10104B6B	21 -10	3	
	24 -12		
JM38510-10201BIB	15 -17	3	
	20 -7		
	26 -27		
JM38510-10202BIB	15 -22	1	
JM38510-10901B6B	14 -50	1	
JM38510-30003BCB	13 -40	4	
	14 -58		
JM38510-30007BCB	13 -45	1	
JM38510-30102BCB	13 -43	4	
	14 -55		
JM38510-30301BCB	14 -57	1	
JM38510-30502BCB	14 -39	2	
JM38510-31509BEB	13 -44	8	
JM38510-31510BCB	14 -32	4	
	14 -33		
JM38510-32001BCB	13 -42	1	
MR13P5H5DCUAR	1 -79	1	
MS15795-	F 12 -11	5	
MS15795-302	F 1 -111	24	
	F 2 -13		
	F 10 -7		
	F 12 -5		
MS15795-304	F 1 -26	28	
	F 1 -29		
	F 7 -1		
	F 7 -34		
	F 10 -4		
	F 10 -6		
	F 12 -8		
	F 12 -9		
	F 16 -10		
	F 20 -1		
MS15795-802	F 25 -11	12	
	F 25 -22		
	F 25 -24		
MS15795-803	F 8 -4	8	
	F 8 -8		
	F 8 -9		
	F 8 -12		
	F 8 -14		
	F 8 -16		
MS18130-11	17 -50	1	
MS18130-12	17 -29	1	

PART NUMBER	FIGURE AND INDEX NO.	QTY PER END ITEM	SMR
MS18130-13	17 -51	1	
MS18130-21	17 -38	2	
MS18130-22	17 -31	1	
MS18130-24	17 -30	2	
MS21043-04	F 16 -10	4	
MS21044-04	F 10 -4	5	
MS21045-04	F 1 -38	8	
	F 1 -110		
	F 1 -121		
MS21045-06	F 1 -45	30	
	F 1 -103		
	F 1 -104		
	F 1 -105		
	F 1 -119		
	F 1 -137		
	F 1 -162		
MS21045-08	F 1 -41	13	
	F 1 -42		
	F 1 -44		
	F 1 -174		
MS35338-134	F 1 -111	18	
	F 1 -114		
	F 7 -35		
	F 10 -7		
	F 10 -8		
	F 16 -4		
	F 16 -7		
MS35338-135	F 8 -3	31	
	F 6 -4		
	F 8 -8		
	F 8 -9		
	F 8 -12		
	F 8 -14		
	F 8 -16		
	F 8 -20		
	F 10 -3		
	F 10 -4		
	F 20 -1		
	F 20 -1		
MS35338-137	F 25 -10	4	
MS35338-139	F 1 -120	6	
MS35338-77	F 2 -6	36	
	F 2 -13		
	F 12 -5		
	F 25 -4		
	F 25 -11		
	F 25 -22		
	F 25 -24		
MS35338-78	F 1 -21	105	
	F 1 -23		
	F 1 -26		
	F 1 -29		
	F 2 -3		
	F 2 -4		
	F 2 -17		
	F 5 -6		
	F 5 -8		
	F 5 -9		
	F 7 -1		
	F 7 -34		
	F 12 -8		

PART NUMBER	FIGURE AND INDEX NO.	QTY PER END ITEM	SMR
	F 12 -9		
	F 12 -11		
	F 12 -20		
	F 16 -3		
	F 16 -10		
MS35649-224	F 2 -13	9	
	F 7 -35		
	F 10 -8		
	F 25 -5		
MS35649-24	F 16 -4	4	
	F 16 -7		
MS35649-244	F 1 -23	31	
	F 1 -29		
	F 7 -1		
	F 7 -34		
	F 8 -4		
	F 8 -8		
	F 8 -9		
	F 8 -12		
	F 8 -14		
	F 8 -20		
	F 12 -5		
	F 20 -1		
MS35649-264	1 -116	3	
MS51021-1	F 25 -33	2	
MS51056-24	1 -115	3	
MS51957-1	F 1 -114	2	
MS51957-12	1 -21	15	
	F 5 -9		
	F 12 -8		
	16 -3		
	F 18 -8		
	F 20 -1		
MS51957-13	F 7 -34	10	
	8 -9		
	8 -14		
	F 8 -17		
	F 12 -11		
MS51957-14	1 -29	34	
	F 1 -37		
	2 -3		
	F 2 -4		
	F 2 -17		
	8 -3		
	10 -3		
	F 12 -9		
MS51957-15	F 1 -26	47	
	1 -28		
	F 5 -8		
	F 7 -1		
	F 8 -4		
	8 -8		
	8 -12		
MS51957-16	F 5 -6	4	
MS51957-2	F 1 -93	44	
	F 1 -95		
	F 1 -111		
	F 2 -6		
	F 2 -7		
	F 12 -5		
	F 16 -4		

PART NUMBER	FIGURE AND INDEX NO.	QTY PER END ITEM	SMR
	F 25 -11		
	F 25 -22		
	F 25 -24		
MS51957-22	F 20 -11	1	
MS51957-26	F 1 -98	5	
	F 1 -133		
MS51957-27	F 1 -103	23	
	F 1 -104		
	F 1 -105		
	F 1 -119		
	F 1 -137		
MS51957-28	F 1 -162	21	
	F 1 -172		
	F 1 -177		
MS51957-29	F 1 -168	2	
	F 1 -169		
MS51957-3	F 1 -38	16	
	F 1 -91		
	F 1 -121		
	F 25 -4		
MS51957-30	F 1 -45	6	
	F 1 -98		
MS51957-4	F 1 -48	10	
	F 1 -95		
	F 10 -7		
	F 16 -7		
MS51957-42	F 25 -10	4	
MS51957-45	F 1 -41	2	
MS51957-5	F 10 -8	2	
MS51958-6	F 1 -12	12	
	F 1 -13		
	F 1 -14		
MS51958-62	F 1 -174	3	
MS51959-1	F 12 -20	10	
	F 18 -5		
MS51959-11	1 -20	4	
MS51959-12	16 -2	2	
MS51959-13	F 1 -66	41	
	F 1 -70		
	F 1 -71		
	F 2 -16		
	F 2 -19		
	F 8 -19		
	F 10 -6		
	F 12 -2		
MS51959-14	2 -2	8	
	8 -2		
	F 8 -16		
	10 -2		
MS51959-15	F 8 -20	17	
	F 10 -4		
	F 16 -10		
	F 20 -1		
MS51959-2	F 18 -1	39	
	F 18 -2		
	F 25 -12		
	F 25 -19		
	F 25 -21		
	F 25 -29		
	F 25 -38		
	F 25 -39		

PART NUMBER	FIGURE AND INDEX NO.	QTY PER END ITEM	SMR
MS51959-28	F 2 -21	6	
MS51959-3	F 1 -92	15	
	F 2 -8		
	25 -2		
	F 25 -34		
	F 25 -35		
MS51959-30	F 1 -5	13	
	F 1 -9		
	F 1 -178		
MS51959-4	F 1 -67	22	
	F 2 -13		
	F 7 -35		
	F 12 -5		
	F 18 -10		
	F 25 -31		
MS51959-58	F 1 -161	2	
MS51960-2	25 -3	4	
MS51960-63	F 1 -172	10	
MS51960-66	F 1 -173	4	
MS51960-69	F 1 -174	2	
MS75083-10	28 -3	1	
MS75083-13	13 -10	1	
MS75083-3	26 -11	1	
MS75083-7	26 -38	1	
MS75083-9	26 -10	3	
MS75084-13	26 -2	2	
MS75084-15	14 -20	1	
MS75084-2	13 -14	1	
MS75084-3	14 -3	2	
MS75084-5	13 -21	2	
MS75084-6	25 -25	1	
MS75084-7	13 -1	1	
MS75084-8	14 -7	1	
MS75085-11	13 -4	1	
MS75085-12	13 -16	3	
MS75085-2	13 -11	4	
	14 -2		
MS75085-6	14 -15	1	
MS75085-7	14 -21	1	
MS91528-1N2B	1 -83	1	
M15733-05-001	1 -162	2	
M15733-49.0001	20 -23	2	
M15733-49-001	10 -9	2	
M21044-04	F 10 -6	1	
M24308-1-1	1 -126	1	
M24308-1-13	1 -141	2	
M24308-1-14	1 -142	1	
M24308-1-2	1 -18	2	
	1 -121		
M24308-1-4	1 -143	1	
M24308-21-2	1 -17	1	
M24308-21-4	1 -145	1	
M24308-26-1	1 -102	7	
	F 2 -20		
	F 5 -1		
	12 -17		
M24308-3-1	12 -16	1	
M24308-3-2	5 -1	3	
	8 -16		
	10 -8		
M24308-3-3	1 -26	1	

PART NUMBER	FIGURE AND INDEX NO.	QTY PER END ITEM	SMR
M24308-3-4	2 -20	1	
M3-396-1	25 -19	4	
M3786-4-5033	1 -84	1	
M38510-00105BCB	4 -3	2	
M38510-02501BCB	19 -29	1	
M38510-02701BCB	19 -53	1	
M38510-10101BCB	23 -5	4	
M38510-10101BGB	22 -3	2	
M38510-10104BGB	19 -6	8	
M38510-10201BIA	9 -15	1	
M38510-10201BIB	17 -18	2	
	19 -48		
M38510-10202BIB	19 -52	1	
M38510-10403BEB	17 -22	1	
M38510-10701BXB	16 -4	2	
	19 -43		
M38510-10701BYB	8 -4	1	
M38510-10901BGB	19 -35	1	
M38510-30008CB	23 -19	1	
M38510-30001BCB	4 -15	5	
M38510-30003BCB	4 -14	4	
M38510-30004BCB	4 -6	3	
M38510-30005BCB	4 -12	2	
M38510-30007BCB	4 -22	1	
M38510-30009BCB	4 -9	4	
M38510-30102BCB	4 -4	11	
	17 -16		
	19 -28		
	23 -15		
M38510-30107BEB	4 -16	2	
M38510-30110BEB	4 -18	4	
M38510-30205BCB	17 -1	2	
M38510-30301BCB	4 -11	1	
M38510-31004BCB	4 -13	5	
	23 -17		
M38510-31302BCB	4 -10	1	
M38510-31501BCB	4 -5	8	
	17 -4		
M38510-31509BEB	4 -21	6	
M38510-32001BCB	4 -17	10	
M39006-09-8165	11 -26	1	
M39024-5-11	18 -4	1	
M39024-5-12	5 -3	1	
M39024-5-13	5 -4	1	
M5757-13-56	1 -48	3	
	2 -7		
	24 -15		
M5757-1356	7 -34	1	
M8340102M4701JB	4 -19	2	
PS10-440-40	F 1 -158	2	
RCR056101KS	21 -8	2	
RCR056102KP	21 -11	2	
RCR056103KP	21 -2	8	
RCR056104KP	21 -3	6	
RCR056104KS	23 -2	2	
RCR056105KS	19 -15	3	
RCR056106KS	23 -6	2	
RCR056114KS	21 -20	1	
RCR056123KS	23 -9	1	
RCR056153KS	23 -12	4	
RCR056184KP	19 -18	1	

PART NUMBER	FIGURE AND INDEX NO.	QTY PER END ITEM	SMR
RCR05G184KS	21 -18	1	
RCR05G204KS	19 -62	1	
RCR05G222KS	21 -17	3	
	23 -20	REF	
	F 23 -20		
RCR05G223KS	21 -15	3	
	23 -18		
RCR05G224KP	19 -16	1	
RCR05G244KS	21 -19	1	
RCR05G271KS	23 -23	4	
RCR05G273KS	23 -4	3	
RCR05G332KS	23 -22	2	
RCR05G334KS	21 -21	1	
RCR05G335KS	23 -11	2	
RCR05G391KS	23 -13	3	
RCR05G392KS	23 -8	1	
RCR05G4R7KS	19 -20	1	
RCR05G472KS	23 -24	1	
RCR05G473KP	21 -22	1	
RCR05G473KS	23 -7	1	
RCR05G682KS	21 -14	1	
RCR05G752K	21 -13	2	
RCR05G822KS	23 -14	2	
RCR05GA742KS	3 -3	1	
RCR07C103JR	11 -4	1	
RCR07C472JR	11 -7	4	
RCR07G102KS	29 -2	1	
RCR07G103KS	29 -6	1	
RCR07G105KS	7 -15	4	
	24 -16		
RCR07G106JR	24 -9	1	
RCR07G151KS	29 -3	1	
RCR07G155KS	1 -56	1	
RCR07G184KS	1 -57	1	
RCR07G222KP	11 -3	1	
RCR07G223KS	29 -5	1	
RCR07G225KS	1 -58	1	
RCR07G274KP	11 -16	1	
RCR07G331KS	F 29 -8	1	
RCR07G8R2	24 -7	1	
RJR24FW102P	6 -9	4	
	7 -6		
	11 -17		
	20 -16		
RJR24FW203M	1 -82	3	
	18 -3		
	19 -36		
RJR24FW502M	19 -41	1	
RJR24HW103P	22 -16	1	
RJR26FW102P	14 -53	1	
RJR26FW103P	15 -39	1	
RJR26FW203P	13 -55	1	
RJR26FX203M	19 -12	1	
RLR05C101JR	13 -34	14	
	17 -12		
	26 -32		
RLR05C102GP	19 -31	3	
RLR05C102JR	13 -54	13	
	13 -57		
	14 -29		
	15 -23		
	17 -5		
	26 -7		
	26 -22		
RLR05C103JR	14 -37	24	
	17 -6		
	19 -3		
	26 -16		
RLR05C104JR	19 -55	3	
RLR05C113JR	13 -58	1	
RLR05C122GP	19 -58	1	
RLR05C122JR	13 -60	1	
RLR05C123JR	13 -49	2	
	17 -8		
RLR05C124GP	19 -25	2	
RLR05C124JR	13 -51	1	
RLR05C131JR	19 -61	1	
RLR05C150JR	17 -21	2	
	19 -46		
RLR05C151JR	13 -61	3	
	17 -23		
	19 -11		
RLR05C152JR	14 -34	3	
	19 -24		
	26 -19		
RLR05C153JR	14 -6	10	
	15 -32		
	F 15 -32		
	19 -27		
RLR05C154JP	19 -54	1	
RLR05C154JR	13 -52	4	
	14 -54		
RLR05C181JR	19 -60	2	
RLR05C182GP	15 -16	1	
RLR05C182JR	13 -48	4	
	17 -17		
	19 -47		
RLR05C183JR	13 -47	2	
	15 -26		
RLR05C201JR	26 -25	1	
RLR05C202JR	19 -8	3	
RLR05C203JR	19 -32	1	
RLR05C220JR	14 -61	1	
RLR05C221GP	17 -13	1	
RLR05C221JR	13 -56	4	
	14 -40		
RLR05C222JR	13 -35	13	
	14 -30		
	17 -2		
	F 26 -23		
	28 -5		
RLR05C223JR	14 -56	4	
	15 -36		
	19 -10		
RLR05C242JR	15 -20	2	
	19 -50		
RLR05C270JR	14 -41	1	
RLR05C271JR	26 -8	2	
	28 -6		
RLR05C272JR	13 -36	5	
	19 -51		
	26 -37		

PART NUMBER	FIGURE AND INDEX NO.	QTY PER END ITEM	SMR
	28 -4		
RLR05C273JR	15 -38	1	
RLR05C331JP	14 -38	4	
	14 -60		
RLR05C332JR	14 -47	4	
	15 -30		
	17 -10		
RLR05C333JR	14 -46	1	
RLR05C362JR	17 -20	1	
RLR05C363JR	14 -45	1	
RLR05C3916P	21 -6	2	
	21 -9		
RLR05C391JR	17 -14	1	
RLR05C392JR	13 -33	8	
	14 -35		
	17 -19		
	19 -39		
	26 -31		
RLR05C3936P	19 -56	1	
RLR05C393JR	13 -39	1	
RLR05C4R7JR	26 -20	1	
RLR05C422JR	13 -37	5	
RLR05C470JR	13 -50	1	
RLR05C471JR	13 -41	5	
	17 -11		
	17 -24		
	28 -7		
RLR05C4726P	19 -30	4	
RLR05C472JR	14 -28	16	
	15 -40		
	17 -3		
	26 -23		
RLR05C473JR	15 -28	2	
RLR05C510JR	19 -59	2	
RLR05C511JR	19 -9	1	
RLR05C512JR	19 -21	3	
RLR05C513JR	19 -26	1	
RLR05C560JR	17 -15	1	
RLR05C562JR	15 -31	2	
	26 -36		
RLR05C563JR	14 -18	2	
	19 -34		
RLR05C680JR	13 -38	5	
	14 -27		
RLR05C681JR	17 -9	1	
RLR05C682JR	14 -52	6	
	14 -59		
	17 -7		
	26 -30		
RLR05C683JR	13 -59	2	
	14 -51		
RLR05C753JR	13 -46	1	
RLR05C8R2JR	28 -9	1	
RLR05C820JR	13 -62	3	
	14 -44		
	26 -26		
RLR05C821JR	14 -48	2	
	17 -25		
RLR05C822JR	14 -62	2	
	19 -37		
RLR05C824JR	14 -49	1	

PART NUMBER	FIGURE AND INDEX NO.	QTY PER END ITEM	SMR
RLR05C910JR	14 -31	2	
RLR05C911JR	14 -36	1	
RLR05C912JR	14 -42	2	
	26 -24		
RLR07C***JR	6 -37	1	
RLR07C101JR	6 -12	3	
	22 -12		
	24 -1		
RLR07C102JA	5 -2	2	
RLR07C102JR	6 -3	9	
	11 -9		
	27 -3		
RLR07C1036P	22 -1	1	
RLR07C103JR	6 -6	7	
	24 -11		
RLR07C104JR	6 -2	6	
	22 -15		
RLR07C121JR	6 -31	1	
RLR07C122JR	11 -24	1	
RLR07C123JP	6 -7	8	
	9 -7		
	9 -25		
	22 -14		
	24 -19		
	27 -6		
RLR07C152JR	24 -10	1	
RLR07C153JR	6 -33	6	
	7 -13		
	11 -12		
	F 22 -4	REF	
	22 -4		
RLR07C154	24 -23	1	
RLR07C154JR	9 -8	2	
RLR07C155KS	6 -13	1	
RLR07C182JR	6 -36	1	
RLR07C183JR	22 -8	2	
	24 -3		
RLR07C184JR	7 -12	1	
RLR07C203JR	9 -23	1	
RLR07C221JR	27 -5	1	
RLR07C222JR	7 -24	6	
	9 -29		
	15 -33		
	27 -4		
RLR07C223JR	1 -59	7	
	6 -19		
	7 -28		
	20 -17		
	22 -11		
RLR07C243JR	6 -27	1	
RLR07C270JR	9 -28	3	
	26 -34		
	28 -10		
RLR07C272JR	6 -28	10	
	7 -36		
	9 -11		
	22 -18		
	24 -20		
	27 -2		
RLR07C274JR	9 -14	1	
RLR07C330JR	6 -20	2	

PART NUMBER	FIGURE AND INDEX NO.	QTY PER END ITEM	SMR
	20 -6		
RLR07C331JR	6 -16	5	
	7 -30		
	11 -31		
RLR07C332JR	6 -10	6	
	7 -38		
	9 -17		
	F 9 -17	REF	
	11 -13		
	20 -18		
RLR07C333JR	6 -15	4	
RLR07C362JR	15 -14	2	
	15 -25		
RLR07C392JR	6 -11	5	
	6 -38		
	9 -3		
	15 -15		
RLR07C471JR	15 -29	3	
	24 -27		
RLR07C472JR	6 -18	6	
	7 -5		
RLR07C4736P	6 -35	1	
RLR07C473JR	1 -55	3	
	6 -14		
	9 -16		
RLR07C560JR	24 -8	1	
RLR07C561JR	9 -24	2	
	20 -15		
RLR07C562JR	7 -8	1	
RLR07C624JR	15 -27	1	
RLR07C681JR	15 -19	1	
RLR07C682JR	6 -1	3	
	7 -22		
	11 -21		
RLR07C683JR	15 -18	1	
RLR07C752JR	9 -22	2	
RLR07C822JR	6 -24	3	
	7 -14		
	11 -32		
RLR07C8226P	22 -20	1	
RLR07610R0KS	15 -21	1	
RLR076225JR	24 -21	1	
RLR0764R7KS	15 -41	1	
RLR206181KS	15 -34	1	
RNC55H113FP	7 -20	1	
RNC55H1212FM	7 -7	1	
RNC55H1271FM	F 20 -14	1	
RNC55H1502FM	7 -16	2	
RNC55H1543FM	7 -23	1	
RNC55H1821FM	20 -14	1	
RNC55H1872FM	7 -10	3	
RNC55H2002FM	7 -29	1	
RNC55H2003FP	19 -7	4	
RNC55H2262FM	7 -2	1	
RNC55H2612FM	7 -21	1	
RNC55H3303FM	7 -19	1	
RNC55H3653FM	7 -25	1	
RNC55H4003FP	19 -57	1	
RNC55H4222FM	7 -4	1	
RNC55H4641FM	20 -5	1	
RNC55H7R87FP	26 -29	1	
RNC55H8251FP	11 -19	2	
RNC55H8661FM	7 -17	1	
RWR80SR301FM	20 -13	1	
RWR80SR750FM	F 20 -13	1	
RWR80S1780FM	22 -7	1	
RWR80S330FM	19 -45	1	
RWR80S6R81FM	6 -25	1	
RWR89SR100FM	7 -26	1	
RWR89S1000FM	24 -4	1	
RWR89S120FM	11 -29	1	
RWR89S6810FM	6 -26	1	
SE24	F 5 -11	46	
SL289-304	16 -6	3	
STSM16PS9	12 -19	2	
STSM16P59	9 -21	2	
SW4	F 8 -4	6	
	F 8 -8		
	F 8 -9		
	F 8 -12		
	F 8 -14		
TR2A	1 -80	1	
UG625BU	1 -97	3	
Z1015	1 -170	3	
08A14-1-7-8	1 -173	2	
031-0905-000	1 -150	20	
031-0944-000	1 -153	12	
100-2	20 -11	1	
10033DAP	13 -63	3	
122B620H01	1 -163	1	
128C102H02	1 -152	1	
128C102H06	1 -149	1	
1411-6	1 -134	1	
14176STD	16 -5	1	
146C033H01	1 -164	1	
1485-6	1 -165	1	
1486-1	1 -47	1	
1491A5-12	12 -20	4	
1491A9-11	25 -29	2	
1496	1 -89	3	
	20 -24		
	20 -25		
1497	1 -96	3	
2051-2	25 -5	1	
21539-6200	1 -37	1	
2170	1 -90	1	
2172	12 -4	4	
21722-6200	1 -176	1	
21727-6200-1	1 -13	2	
21727-6200-2	1 -14	2	
21728-6200-1	1 -66	1	
21728-6200-2	1 -67	1	
21729-6200-1	1 -68	2	
21729-6200-2	1 -69	2	
21729-6200-3	1 -64	2	
21729-6200-4	1 -65	2	
21729-6200-5	1 -159	2	
21729-6200-6	1 -160	2	
21733-6200	1 -72	4	
21748-6200	F 1 -161	2	
2175	12 -18	1	
21750-6200	1 -	1	

PART NUMBER	FIGURE AND INDEX NO.	QTY PER END ITEM	SMR
21752-6200	1 -158	1	
21753-6200	1 -161	1	
21755-6200-1	1 -70	1	
21755-6200-2	1 -71	1	
21756-6200	1 -91	1	
21757STD	1 -24	4	
21761-6200	1 -178	1	
21763-6200	1 -2	1	
21764-6200	1 -6	1	
21766-6200	1 -93	1	
21768-6200-1	1 -166	1	
21769-6200-1	1 -3	1	
21769-6200-2	1 -7	1	
21769-6200-3	1 -10	4	
21769-6200-4	1 -4	1	
21769-6200-5	1 -8	1	
21770-6201-1	1 -52	1	
21771-6200	1 -92	1	
21791-6200	1 -133	1	
21792-6200	1 -1	1	
21793-6200-1	1 -62	1	
21793-6200-2	1 -63	1	
21794-6200	1 -175	1	
21797-6200	1 -120	6	
21800-6203	1 -54	1	
	18 -	REF	
21801-6203	19 -22	1	
21807-6200	1 -38	1	
21808-6200	1 -154	4	
21810-6203	19 -64	1	
21813-6203-1	18 -1	1	
21813-6203-2	18 -2	1	
21814-6203	18 -11	2	
21830-6200	1 -118	1	
21830-6204	1 -50	1	
21860-6205	1 -123	1	
	25 -	REF	
21861-6205	25 -11	1	
	26 -	REF	
21862-6205	25 -24	1	
	28 -	REF	
21863-6205	25 -22	1	
	27 -	REF	
21871-6205	26 -43	1	
21872-6205	28 -15	1	
21873-6205	27 -9	1	
21874-6205	25 -38	1	
21875-6205-1	25 -40	1	
21875-6205-2	25 -1	1	
21875-6205-3	25 -39	1	
21875-6205-4	25 -9	1	
21875-6205-5	25 -10	1	
21876-6205	25 -18	4	
21877-6205-1	25 -17	2	
21877-6205-2	25 -16	2	
21881-6203	18 -5	1	
	19 -	REF	
21882-6205-1	25 -35	1	
21882-6205-2	25 -31	1	
21883-6205	25 -34	2	
21884-6205	25 -12	1	

PART NUMBER	FIGURE AND INDEX NO.	QTY PER END ITEM	SMR
21885-6200	5 -13	24	
21886-6205	25 -13	1	
21887-6205	25 -14	1	
21888-6205	25 -37	1	
21891-6200	1 -177	1	
21892-6200	1 -172	1	
21893-6200	1 -180	1	
21894-6200	1 -179	1	
21895-6200	1 -174	1	
21896-6200	1 -5	1	
21897-6200	1 -9	1	
21900-6206	F 1 -110	1	
21903-6200	1 -12	2	
21906-6200	1 -76	7	
21914-6206	1 -112	1	
21915-6206-1	1 -117	1	
21915-6206-2	1 -111	1	
21930-6207	1 -49	1	
	12 -	REF	
21931-6207	12 -9	1	
	13 -	REF	
21932-6207	12 -10	1	
	14 -	REF	
21933-6207	12 -11	1	
	15 -	REF	
21941-6207	13 -66	1	
21942-6207	14 -64	1	
21943-6207	15 -46	1	
21945-6207-1	12 -21	1	
21945-6207-2	12 -1	1	
21945-6207-3	12 -2		
21946STD	12 -12	5	
21947-6207	12 -6	8	
	15 -13		
21970-6208	1 -53	1	
22000-6209	1 -11	1	
	2 -	REF	
22001-6209	2 -6	1	
	3 -	REF	
22002-6209	2 -17	1	
	4 -	REF	
22011-6209	3 -5	1	
22015-6209-1	2 -22	1	
22015-6209-2	2 -4	1	
22015-6209-3	2 -1	1	
22015-6209-4	2 -16	1	
22015-6209-5	2 -19	2	
22016-6209	2 -21	1	
22017-6209-2	2 -5	1	
22040-6210	1 -51	1	
	16 -	REF	
22041-6210	16 -10	1	
	17 -	REF	
22050-6210	17 -54	1	
22055-6210-1	16 -12	1	
22055-6210-2	16 -1	1	
22070-6211	1 -137	1	
	29 -	REF	
22080-6200	29 -10	1	
22081-6211	1 -44	1	
22082-6211	1 -42	1	

PART NUMBER	FIGURE AND INDEX NO.	QTY PER END ITEM	SMR
22083-6211	1 -41	1	
22100-6212	1 -35	1	
	10 -	REF	
22101-6212	10 -4	1	
	11 -	REF	
22110-6212	11 -33	1	
22112-6212-1	10 -10	1	
22112-6212-2	10 -1	1	
22113-2	10 -5	5	
22113STD	1 -25	4	
22113STD4	8 -20	4	
22116-6212	10 -6	1	
22120-6213	1 -34	1	
	8 -	REF	
22122	9 -	REF	
22122-6213	8 -19	1	
22125-6213	8 -18	1	
22130-6213	9 -32	1	
22131-6213	8 -17	1	
22132-6213-1	8 -21	1	
22132-6213-2	8 -1	1	
22140-6214	F 1 -18	1	
22141-6214	1 -22	1	
	6 -	REF	
22142-6214	1 -23	1	
	7 -	REF	
22143-6214	F 7 -1	1	
22151-6214	6 -42	1	
22152-6214	7 -39	1	
22422-6214-2	1 -19	1	
22422-6241-1	1 -33	1	
22423-6214	7 -35	2	
22450-6216	1 -138	1	
	20 -	REF	
22451-6216	F 20 -1	1	
22465-6216	F 20 -27	1	
22465-6216-1	20 -31	1	
22465-6216-2	20 -1	1	
22465-6216-3	F 20 -1	1	
22465-6216-5	20 -29	4	
22470-6217	1 -15	1	
	5 -	REF	
22485-6217	5 -14	1	
22486-6217-1	5 -8	1	
22486-6217-2	5 -7	1	
22487-6217	5 -6	1	
22489-6217	5 -11	23	
22490-6217	5 -12	2	
22530-6216	F 20 -	REF	
22530-6219	1 -99	1	
22531-6219	F 20 -1	1	
22536-6219	20 -12	1	
22540-6219	20 -21	1	
22571-6221	1 -106	1	
22572-6222	1 -107	1	
22575-6221	1 -108	4	
22610-6223	1 -104	1	
	22 -	REF	
22620-6223	22 -23	1	
22630-6224	1 -119	1	
	24 -	REF	

PART NUMBER	FIGURE AND INDEX NO.	QTY PER END ITEM	SMR
22640-6224	24 -29	1	
22650-6225	1 -103	1	
	21 -	REF	
22660-6225	21 -24	1	
22670-6226	1 -105	1	
	23 -	REF	
22680-6226	23 -27	1	
22700-6200	4 -20	2	
	4 -23		
22701-6200	4 -2	3	
22716-6200	14 -22	1	
22721-6200-1	1 -36	2	
	1 -88		
22721-6200-2	1 -81	2	
	5 -5		
22721-6200-3	1 -87	3	
	18 -6		
22722-6200	5 -10	1	
22726-6200	15 -24	2	
22727-6210	17 -46	2	
22728-6200	11 -30	1	
22728-6200R25	9 -26	2	
	20 -2		
22731-6200-1	1 -114	1	
22731-6200-2	25 -4	1	
22735-6200	2 -13	1	
22739-6200	13 -53	1	
22740-6200	13 -22	2	
22742-6200-1	1 -45	1	
22742-6200-2	1 -46	1	
22743-6200	5 -9	1	
22746-6200	25 -33	1	
22747-6200	1 -77	10	
	2 -10		
22748-6200	2 -9	1	
22748-6200-1	18 -7	1	
22750-6200	25 -27	1	
22750-6200-12	1 -110	6	
22752-6200	12 -3	9	
22754-6200	26 -9	2	
	28 -12		
22755-6200	25 -28	2	
	27 -1		
22758-6200	28 -2	1	
22759-6200	26 -15	3	
22761-6200	10 -7	2	
	20 -26		
22762-6200	15 -35	1	
22763-6200-1	15 -5	1	
22763-6200-2	15 -7	1	
22763-6200-3	15 -12	1	
22770-6200	25 -15	4	
22771-6200	25 -26	1	
22772-6200	25 -32	2	
22773-6200-1	19 -4	9	
22773-6200-3	19 -38	1	
22774-6200	2 -12	3	
22776-6200	12 -5	1	
22777-6200	26 -5	1	
22778-6200	3 -2	6	
22779-6200	25 -23	1	

PART NUMBER	FIGURE AND INDEX NO.	QTY PER END ITEM	SMR
22785-6200	1 -85	1	
22786-6200	1 -40	1	
22787-6200	1 -171	2	
22790-6200	1 -109	2	
22790-6200-1	1 -100	1	
22790-6200-10	16 -9	5	
	18 -9		
22790-6200-11	1 -101	7	
	1 -125		
	1 -148		
22790-6200-12	1 -147	1	
22790-6200-2	1 -124	1	
22790-6200-3	1 -128	1	
22790-6200-4	1 -146	1	
22790-6200-6	16 -7	1	
22790-6200-8	18 -8	1	
22790-6200-9	16 -8	3	
22812-6203-1	18 -12	1	
22812-6203-2	18 -10	1	
22812-6203-3	18 -13	1	
22812-6203-4	18 -14	1	
2381-1	1 -132	5	
249-1178-001	1 -151	4	
2552	1 -140	2	
260-2TH18B	25 -21	1	
260-4TH5B	12 -8	1	
260-4T115B	15 -45	1	
2630-14020T093	1 -30	2	
341	1 -31	11	
	1 -95		
341-2	25 -6	2	
	25 -30		
4AS30WSSMODB	20 -30	2	
4003	8 -5	2	
	8 -15		
4066	1 -32	1	
4826-1	1 -78	1	
4826-1-0516	2 -14	4	
4870-1	1 -94	12	
5130SCDTFS2	26 -40	6	
5130SCDTSCD2	15 -42	15	
5130SCDTSD2	7 -32	136	
	9 -31		
	11 -15		
	13 -65		
	19 -63		
	20 -20		
	23 -26		
	24 -28		
	27 -7		
	28 -14		
5130SCDTSS2	26 -41	10	
5130SJDTSD2	29 -9	10	
5130STDTSD2	6 -41	46	
	17 -53		
55327DM	4 -8	1	
75540-002	21 -23	48	
	23 -25		
772	1 -167	1	
775	1 -168	1	
776	1 -169	1	

PART NUMBER	FIGURE AND INDEX NO.	QTY PER END ITEM	SMR
7830SCDTSCD2	15 -43	14	
7830SCDTSD2	13 -64	56	
	22 -22		
7830SCDTSS2	29 -8	1	
7969 F	2 -10	9	
805	8 -6	3	
	8 -10		
	8 -13		
8106AQ256	2 -8	2	
8209SS0440-7	16 -11	8	
	20 -22		
8216A0440	2 -18	6	
8217SS0632-7	1 -135	1	
9222A115	2 -15	4	

SECTION IV
REFERENCE DESIGNATION INDEX

REFERENCE DESIGNATION	FIGURE AND INDEX NO.	REFERENCE DESIGNATION	FIGURE AND INDEX NO.	REFERENCE DESIGNATION	FIGURE AND INDEX NO.
A1	1 -52	A10A1Q1	17 -26	A11CR1	29 -1
A10	1 -51	A10A1Q2	F 17 -26	A11CR2	F 29 -1
A10A1	16 -10	A10A1Q3	F 17 -26	A11CR3	F 29 -1
A10A1CR1	17 -45	A10A1Q4	F 17 -26	A11CR4	F 29 -1
A10A1CR2	17 -32	A10A1Q5	F 17 -26	A11C1	29 -7
A10A1CR3	F 17 -32	A10A1R1	17 -6	A11E10	F 29 -9
A10A1C1	17 -27	A10A1R10	17 -12	A11E2	F 29 -9
A10A1C10	F 17 -28	A10A1R11	F 17 -7	A11E3	F 29 -9
A10A1C11	17 -35	A10A1R12	17 -14	A11E4	F 29 -9
A10A1C12	17 -36	A10A1R13	17 -15	A11E5	F 29 -9
A10A1C13	17 -40	A10A1R14	17 -13	A11E6	F 29 -9
A10A1C14	17 -39	A10A1R16	17 -11	A11E7	F 29 -9
A10A1C15	17 -52	A10A1R17	F 17 -6	A11E8	F 29 -9
A10A1C16	17 -49	A10A1R18	F 17 -3	A11E9	F 29 -9
A10A1C17	F 17 -27	A10A1R19	17 -25	A11Q1	29 -4
A10A1C18	F 17 -27	A10A1R2	17 -7	A11R1	F 29 -8
A10A1C19	F 17 -27	A10A1R20	F 17 -3	A11R2	29 -6
A10A1C2	17 -28	A10A1R21	17 -23	A11R3	29 -5
A10A1C20	17 -47	A10A1R22	17 -24	A11R4	29 -3
A10A1C21	17 -48	A10A1R23	F 17 -12	A11R5	29 -2
A10A1C23	F 17 -47	A10A1R24	F 17 -3	A12	1 -35
A10A1C24	F 17 -49	A10A1R25	F 17 -5	A12AI	10 -4
A10A1C25	F 17 -34	A10A1R26	F 17 -3	A12A1CR1	11 -1
A10A1C26	F 17 -28	A10A1R27	17 -17	A12A1CR2	11 -11
A10A1C27	F 17 -28	A10A1R28	17 -21	A12A1CR3	11 -2
A10A1C28	17 -42	A10A1R29	17 -19	A12A1CR4	F 11 -2
A10A1C29	17 -44	A10A1R30	F 17 -6	A12A1CR5	11 -20
A10A1C3	F 17 -27	A10A1R31	F 17 -6	A12A1CR6	11 -25
A10A1C30	17 -41	A10A1R32	F 17 -6	A12A1CR7	11 -8
A10A1C31	F 17 -27	A10A1R33	F 17 -6	A12A1CR8	F 11 -2
A10A1C32	F 17 -27	A10A1R34	F 17 -6	A12A1CR9	F 11 -2
A10A1C34	F 17 -42	A10A1R35	17 -20	A12A1C10	11 -26
A10A1C35	17 -43	A10A1R36	F 17 -2	A12A1C11	F 11 -10
A10A1C36	F 17 -28	A10A1R4	17 -8	A12A1C2	11 -10
A10A1C37	F 17 -28	A10A1R5	17 -10	A12A1C3	F 11 -10
A10A1C38	F 17 -28	A10A1R6	17 -9	A12A1C4	11 -18
A10A1C39	F 17 -28	A10A1R7	17 -3	A12A1C8	11 -27
A10A1C4	F 17 -28	A10A1R8	F 17 -6	A12A1C9	F 11 -27
A10A1C40	F 17 -28	A10A1R9	F 17 -3	A12A1E1	11 -15
A10A1C5	17 -33	A10A1T1	17 -46	A12A1E2	F 11 -15
A10A1C6	17 -34	A10A1T2	F 17 -46	A12A1E3	F 11 -15
A10A1C7	F 17 -27	A10A1U1	17 -1	A12A1E4	F 11 -15
A10A1C8	F 17 -28	A10A1U1	F 17 -1	A12A1E5	F 11 -15
A10A1C9	17 -37	A10A1U3	17 -4	A12A1E6	F 11 -15
A10A1L1	17 -31	A10A1U3	17 -5	A12A1E7	F 11 -15
A10A1L2	17 -38	A10A1U4	17 -16	A12A1E8	F 11 -15
A10A1L3	F 17 -38	A10A1U5	17 -22	A12A1E9	F 11 -15
A10A1L4	17 -30	A10A1U6	17 -18	A12A1F1	11 -28
A10A1L5	17 -51	A10P1	16 -7	A12A1L2	11 -30
A10A1L6	17 -29	A10U1	16 -4	A12A1Q1	11 -5
A10A1L7	17 -50	A101AR15	17 -2	A12A1Q2	11 -6
A10A1L8	F 17 -30	A11	1 -137	A12A1Q3	11 -22

REFERENCE DESIGNATION	FIGURE AND INDEX NO.	REFERENCE DESIGNATION	FIGURE AND INDEX NO.	REFERENCE DESIGNATION	FIGURE AND INDEX NO.
A12A1Q5	F 11 -22	A13A1C7	F 9 -4	A14A1E13	F 6 -41
A12A1Q6	F 11 -22	A13A1C8	9 -1	A14A1E14	F 6 -41
A12A1R1	11 -32	A13A1C9	F 9 -1	A14A1E15	F 6 -41
A12A1R10	11 -24	A13A1L1	9 -26	A14A1E16	F 6 -41
A12A1R11	11 -19	A13A1Q3	9 -10	A14A1E17	F 6 -41
A12A1R12	11 -17	A13A1Q4	9 -6	A14A1E18	F 6 -41
A12A1R13	F 11 -19	A13A1Q5	9 -30	A14A1E19	F 6 -41
A12A1R14	11 -9	A13A1Q6	9 -9	A14A1E2	F 6 -41
A12A1R15	11 -4	A13A1Q7	F 9 -9	A14A1E3	F 6 -41
A12A1R16	11 -3	A13A1Q8	F 9 -6	A14A1E4	F 6 -41
A12A1R17	F 11 -7	A13A1R1	9 -28	A14A1E5	F 6 -41
A12A1R18	11 -16	A13A1R10	F 9 -3	A14A1E6	F 6 -41
A12A1R2	11 -12	A13A1R11	F 9 -5	A14A1E7	F 6 -41
A12A1R3	11 -31	A13A1R12	F 9 -7	A14A1E8	F 6 -41
A12A1R4	11 -13	A13A1R13	F 9 -8	A14A1E9	F 6 -41
A12A1R5	11 -7	A13A1R14	9 -11	A14A1F1	6 -32
A12A1R6	F 11 -7	A13A1R15	9 -17	A14A1Q1	6 -34
A12A1R7	11 -21	A13A1R16	F 9 -17	A14A1Q10	F 6 -17
A12A1R8	F 11 -7	A13A1R17	F 9 -5	A14A1Q2	6 -17
A12A1R9	11 -29	A13A1R18	9 -16	A14A1Q4	6 -29
A12A1U2	11 -14	A13A1R2	9 -29	A14A1Q5	F 6 -17
A12FL1	10 -9	A13A1R20	F 9 -11	A14A1Q6	F 6 -17
A12FL2	F 10 -9	A13A1R21	F 9 -11	A14A1Q7	F 6 -17
A12L1	10 -6	A13A1R22	F 9 -17	A14A1Q8	F 6 -17
A12P1	10 -8	A13A1R23	9 -24	A14A1Q9	6 -22
A12U1	10 -7	A13A1R24	9 -25	A14A1R1	6 -2
A13	1 -34	A13A1R3	9 -22	A14A1R10	F 6 -3
A13A1	8 -19	A13A1R4	F 9 -22	A14A1R11	6 -33
A13A1CR1	9 -18	A13A1R5	9 -23	A14A1R12	6 -19
A13A1CR10	F 9 -18	A13A1R6	9 -3	A14A1R13	F 6 -28
A13A1CR11	F 9 -18	A13A1R7	9 -7	A14A1R14	6 -6
A13A1CR12	F 9 -18	A13A1R8	9 -5	A14A1R15	F 6 -2
A13A1CR13	9 -2	A13A1U1	9 -15	A14A1R16	F 6 -2
A13A1CR14	F 9 -2	A13P1	8 -16	A14A1R17	6 -18
A13A1CR15	F 9 -2	A13Q1	8 -7	A14A1R18	6 -37
A13A1CR16	9 -20	A13T1	8 -17	A14A1R19	6 -24
A13A1CR2	F 9 -18	A13U2	8 -4	A14A1R2	6 -3
A13A1CR3	F 9 -18	A131AR9	9 -8	A14A1R20	F 6 -3
A13A1CR4	F 9 -18	A14	F 1 -18	A14A1R21	F 6 -3
A13A1CR5	F 9 -18	A14A1	1 -22	A14A1R22	6 -27
A13A1CR6	F 9 -18	A14A1CR10	F 6 -5	A14A1R23	6 -7
A13A1CR7	F 9 -18	A14A1CR11	F 6 -5	A14A1R24	6 -25
A13A1CR8	F 9 -18	A14A1CR12	6 -23	A14A1R25	F 6 -6
A13A1CR9	F 9 -18	A14A1CR13	F 6 -4	A14A1R26	F 6 -2
A13A1C1	9 -4	A14A1CR14	6 -40	A14A1R27	F 6 -3
A13A1C10	F 9 -4	A14A1CR15	F 6 -23	A14A1R28	6 -10
A13A1C11	F 9 -4	A14A1CR2	6 -5	A14A1R29	6 -13
A13A1C12	F 9 -1	A14A1CR3	F 6 -5	A14A1R3	6 -35
A13A1C13	F 9 -1	A14A1CR4	F 6 -5	A14A1R30	6 -14
A13A1C14	F 9 -1	A14A1CR5	6 -39	A14A1R31	6 -15
A13A1C15	9 -12	A14A1CR6	6 -30	A14A1R32	F 6 -15
A13A1C16	F 9 -1	A14A1CR7	6 -4	A14A1R33	6 -11
A13A1C17	9 -13	A14A1CR8	F 6 -5	A14A1R34	6 -9
A13A1C18	F 9 -13	A14A1CR9	F 6 -5	A14A1R35	6 -12
A13A1C19	9 -14	A14A1C1	6 -21	A14A1R36	F 6 -15
A13A1C19	9 -19	A14A1C2	F 6 -21	A14A1R37	F 6 -18
A13A1C2	F 9 -4	A14A1C3	F 6 -21	A14A1R38	F 6 -6
A13A1C3	9 -27	A14A1E1	6 -41	A14A1R39	6 -16
A13A1C4	F 9 -4	A14A1E10	F 6 -41	A14A1R4	6 -31
A13A1C5	F 9 -4	A14A1E11	F 6 -41	A14A1R40	F 6 -18
A13A1C6	F 9 -4	A14A1E12	F 6 -41	A14A1R41	F 6 -19

REFERENCE DESIGNATION	FIGURE AND INDEX NO.	REFERENCE DESIGNATION	FIGURE AND INDEX NO.	REFERENCE DESIGNATION	FIGURE AND INDEX NO.
A14A1R42	F 6 -6	A14A2R23	7 -10	A16U1	20 -26
A14A1R43	F 6 -15	A14A2R24	F 7 -10	A17	1 -15
A14A1R44	F 6 -6	A14A2R25	F 7 -10	A17BT1	5 -13
A14A1R45	F 6 -18	A14A2R27	7 -12	A17BT10	F 5 -13
A14A1R46	6 -20	A14A2R28	7 -19	A17BT11	F 5 -13
A14A1R47	F 6 -3	A14A2R29	7 -13	A17BT12	F 5 -13
A14A1R48	6 -26	A14A2R3	7 -25	A17BT13	F 5 -13
A14A1R49	F 6 -19	A14A2R31	F 7 -13	A17BT14	F 5 -13
A14A1R5	6 -28	A14A2R32	7 -5	A17BT15	F 5 -13
A14A1R50	F 6 -16	A14A2R33	F 7 -5	A17BT16	F 5 -13
A14A1R6	6 -36	A14A2R34	7 -8	A17BT17	F 5 -13
A14A1R7	6 -38	A14A2R35	7 -38	A17BT18	F 5 -13
A14A1R8	F 6 -3	A14A2R36	7 -36	A17BT19	F 5 -13
A14A1R9	6 -1	A14A2R37	F 7 -36	A17BT2	F 5 -13
A14A1U1	6 -8	A14A2R38	F 7 -30	A17BT20	F 5 -13
A14A1U2	F 6 -8	A14A2R39	F 7 -24	A17BT21	F 5 -13
A14A1U3	F 6 -8	A14A2R4	7 -29	A17BT22	F 5 -13
A14A1U4	F 6 -8	A14A2R5	7 -23	A17BT23	F 5 -13
A14A2	1 -23	A14A2R6	7 -16	A17BT24	F 5 -13
A14A2CR1	7 -9	A14A2R7	7 -17	A17BT3	F 5 -13
A14A2CR10	F 7 -9	A14A2R8	F 7 -16	A17BT4	F 5 -13
A14A2CR2	F 7 -9	A14A2R9	7 -15	A17BT5	F 5 -13
A14A2CR3	F 7 -9	A14A2U1	F 7 -11	A17BT6	F 5 -13
A14A2CR4	F 7 -9	A14A2U2	F 7 -11	A17BT7	F 5 -13
A14A2CR7	7 -33	A14A2U3	7 -11	A17BT8	F 5 -13
A14A2CR8	F 7 -9	A14A2U4	F 7 -11	A17BT9	F 5 -13
A14A2CR9	7 -18	A14P1	1 -26	A17J1	5 -1
A14A2C1	7 -27	A14Q1	1 -27	A17R1	F 5 -2
A14A2E1	7 -32	A16	1 -138	A17R2	5 -2
A14A2E10	F 7 -32	A16A1	F 20 -1	A17S1	5 -5
A14A2E11	F 7 -32	A16A1CR1	20 -9	A17S2	5 -10
A14A2E12	F 7 -32	A16A1C2	20 -4	A17TP1	5 -3
A14A2E13	F 7 -32	A16A1C3	20 -8	A17TP2	5 -4
A14A2E2	F 7 -32	A16A1C4	F 20 -8	A17T1	5 -9
A14A2E3	F 7 -32	A16A1C5	20 -10	A19	1 -99
A14A2E4	F 7 -32	A16A1E1	20 -20	A19A1	F 20 -1
A14A2E5	F 7 -32	A16A1E2	F 20 -20	A19A1CR1	F 20 -9
A14A2E6	F 7 -32	A16A1E3	F 20 -20	A19A1C2	F 20 -4
A14A2E7	F 7 -32	A16A1E4	F 20 -20	A19A1C3	F 20 -8
A14A2E8	F 7 -32	A16A1E5	F 20 -20	A19A1C4	F 20 -8
A14A2E9	F 7 -32	A16A1E6	F 20 -20	A19A1C5	F 20 -10
A14A2K1	7 -34	A16A1E7	F 20 -20	A19A1E1	F 20 -20
A14A2Q1	7 -31	A16A1E8	F 20 -20	A19A1E2	F 20 -20
A14A2Q2	7 -3	A16A1E9	F 20 -20	A19A1E3	F 20 -20
A14A2Q3	F 7 -3	A16A1F1	20 -3	A19A1E4	F 20 -20
A14A2Q4	7 -37	A16A1L1	20 -2	A19A1E5	F 20 -20
A14A2Q5	7 -1	A16A1L2	20 -12	A19A1E6	F 20 -20
A14A2Q6	F 7 -31	A16A1Q1	20 -19	A19A1E7	F 20 -20
A14A2R1	7 -26	A16A1R1	20 -14	A19A1E8	F 20 -20
A14A2R10	F 7 -15	A16A1R2	20 -16	A19A1E9	F 20 -20
A14A2R11	7 -14	A16A1R3	20 -18	A19A1F1	F 20 -3
A14A2R12	7 -22	A16A1R4	20 -5	A19A1L1	F 20 -2
A14A2R13	7 -2	A16A1R5	20 -6	A19A1L2	F 20 -12
A14A2R14	7 -6	A16A1R6	20 -13	A19A1Q1	F 20 -19
A14A2R15	7 -7	A16A1R7	20 -15	A19A1R1	F 20 -14
A14A2R16	7 -4	A16A1R8	20 -17	A19A1R2	F 20 -16
A14A2R17	7 -28	A16A1U2	20 -7	A19A1R3	F 20 -18
A14A2R19	7 -21	A16E1	20 -27	A19A1R4	F 20 -5
A14A2R2	7 -24	A16E2	F 20 -27	A19A1R5	F 20 -6
A14A2R20	7 -30	A16FL1	20 -23	A19A1R6	F 20 -13
A14A2R21	7 -20	A16FL2	F 20 -23	A19A1R7	F 20 -15

REFERENCE DESIGNATION	FIGURE AND INDEX NO.	REFERENCE DESIGNATION	FIGURE AND INDEX NO.	REFERENCE DESIGNATION	FIGURE AND INDEX NO.
A19A1R8	F 20 -17	A24E5	F 24 -28	A25R27	21 -9
A19A1U2	F 20 -7	A24E6	F 24 -28	A25R28	21 -8
A19E1	F 20 -27	A24E7	F 24 -28	A25R29	F 21 -2
A19E2	F 20 -27	A24E8	F 24 -28	A25R3	21 -19
A19FL1	F 20 -23	A24E9	F 24 -28	A25R30	F 21 -8
A19FL2	F 20 -23	A24K21	24 -15	A25R31	F 21 -2
A19U1	F 20 -26	A24Q20	F 24 -2	A25R4	21 -20
A21	1 -106	A24Q3	24 -2	A25R5	21 -21
A22	1 -107	A24Q4	24 -6	A25R6	21 -14
A23	1 -104	A24Q5	24 -5	A25R7	21 -13
A23CR1	22 -17	A24R1	24 -27	A25R8	F 21 -13
A23CR2	22 -13	A24R21	24 -23	A25U1	21 -10
A23CR3	22 -21	A24R23	24 -21	A26	1 -105
A23CR4	F 22 -13	A24R24	24 -9	A26CR1	23 -10
A23CR5	F 22 -13	A24R25	24 -19	A26CR2	F 23 -10
A23C1	22 -5	A24R26	24 -10	A26C1	23 -3
A23C3	22 -6	A24R27	24 -20	A26C10	F 23 -3
A23C4	F 22 -6	A24R28	24 -16	A26C11	F 23 -3
A23C5	F 22 -6	A24R29	F 24 -16	A26C12	F 23 -3
A23C6	22 -19	A24R30	24 -11	A26C13	F 23 -3
A23C7	F 22 -19	A24R31	F 24 -19	A26C14	F 23 -3
A23C8	22 -2	A24R32	F 24 -11	A26C15	23 -1
A23E1	22 -22	A24R4	24 -3	A26C16	F 23 -3
A23E2	F 22 -22	A24R5	24 -1	A26C17	F 23 -3
A23E3	F 22 -22	A24R6	24 -4	A26C18	F 23 -3
A23E4	F 22 -22	A24R8	24 -8	A26C19	23 -16
A23Q1	22 -10	A24R9	24 -7	A26C2	F 23 -3
A23Q2	22 -9	A24U20	24 -12	A26C20	F 23 -16
A23R1	22 -18	A24U21	F 24 -12	A26C3	F 23 -3
A23R10	22 -20	A25	1 -103	A26C4	F 23 -3
A23R11	F 22 -4	A25CR1	21 -16	A26E1	23 -26
A23R12	F 22 -15	A25C1	21 -1	A26E2	F 23 -26
A23R13	22 -1	A25C10	F 21 -7	A26E3	F 23 -26
A23R2	22 -14	A25C11	F 21 -7	A26E4	F 23 -26
A23R3	22 -16	A25C2	21 -7	A26Q1	23 -21
A23R4	22 -7	A25C3	21 -4	A26Q2	F 23 -21
A23R5	22 -15	A25C4	F 21 -1	A26Q3	F 23 -21
A23R6	22 -12	A25C5	F 21 -1	A26Q4	F 23 -21
A23R7	22 -8	A25C6	21 -12	A26Q5	F 23 -21
A23R8	22 -11	A25C7	F 21 -1	A26Q6	F 23 -21
A23R9	22 -4	A25C8	21 -5	A26R1	23 -18
A23U1	22 -3	A25C9	F 21 -1	A26R10	23 -4
A23U2	F 22 -3	A25R1	21 -17	A26R11	F 23 -23
A24	1 -119	A25R10	21 -3	A26R12	23 -2
A24CR20	F 24 -14	A25R11	21 -2	A26R13	F 23 -20
A24CR21	F 24 -14	A25R12	F 21 -2	A26R14	23 -20
A24CR23	F 24 -14	A25R13	F 21 -2	A26R15	F 23 -4
A24CR3	24 -14	A25R14	21 -22	A26R17	23 -11
A24CR4	F 24 -14	A25R15	21 -11	A26R18	23 -12
A24CR5	24 -26	A25R16	21 -15	A26R2	23 -22
A24CR6	24 -25	A25R17	F 21 -3	A26R20	23 -6
A24CR7	F 24 -25	A25R18	F 21 -2	A26R22	F 23 -12
A24C21	F 24 -17	A25R19	F 21 -2	A26R23	23 -13
A24C22	24 -13	A25R2	21 -18	A26R24	23 -9
A24C23	F 24 -13	A25R20	F 21 -3	A26R25	23 -8
A24C24	24 -22	A25R21	F 21 -3	A26R26	23 -7
A24C3	24 -24	A25R22	F 21 -3	A26R28	F 23 -11
A24C4	24 -17	A25R23	F 21 -3	A26R29	F 23 -12
A24E2	F 24 -28	A25R24	F 21 -2	A26R3	23 -23
A24E3	F 24 -28	A25R25	F 21 -11	A26R30	F 23 -13
A24E4	F 24 -28	A25R26	21 -6	A26R31	F 23 -6

REFERENCE DESIGNATION	FIGURE AND INDEX NO.	REFERENCE DESIGNATION	FIGURE AND INDEX NO.	REFERENCE DESIGNATION	FIGURE AND INDEX NO.
A26R33	F 23 -12	A3A1C52	F 19 -5	A3A1R45	F 19 -8
A26R34	F 23 -13	A3A1C53	F 19 -5	A3A1R46	19 -45
A26R35	F 23 -2	A3A1C54	F 19 -19	A3A1R48	F 19 -10
A26R37	F 23 -4	A3A1C6	19 -49	A3A1R5	F 19 -39
A26R38	23 -24	A3A1C7	F 19 -19	A3A1R51	F 19 -3
A26R4	F 23 -18	A3A1E1 THRU E50	19 -63	A3A1R52	F 19 -8
A26R5	F 23 -22	A3A1Q3	19 -33	A3A1R53	19 -11
A26R6	F 23 -23	A3A1Q4	19 -1	A3A1R54	F 19 -7
A26R7	23 -14	A3A1Q5	F 19 -1	A3A1R56	F 19 -7
A26R8	F 23 -23	A3A1Q6	19 -23	A3A1R59	19 -15
A26R9	F 23 -14	A3A1Q7	19 -14	A3A1R60	19 -31
A26U1	23 -19	A3A1Q8	F 19 -14	A3A1R68	19 -12
A26U2	23 -17	A3A1R1	19 -47	A3A1R71	F 19 -3
A26U3	23 -15	A3A1R101	F 19 -3	A3A1R72	19 -55
A26U4	23 -5	A3A1R102	F 19 -51	A3A1R73	19 -25
A26U5	F 23 -5	A3A1R103	F 19 -25	A3A1R74	19 -21
A26U6	F 23 -5	A3A1R105	F 19 -55	A3A1R75	F 19 -21
A26U7	F 23 -5	A3A1R107	19 -27	A3A1R76	F 19 -21
A3	1 -54	A3A1R113	F 19 -31	A3A1R78	F 19 -15
A3A1	18 -5	A3A1R114	19 -26	A3A1R87	F 19 -3
A3A1A1	19 -22	A3A1R116	19 -20	A3A1R89	19 -57
A3A1CR1	19 -17	A3A1R117	F 19 -3	A3A1R91	19 -60
A3A1CR10	F 19 -17	A3A1R118	19 -56	A3A1R94	F 19 -3
A3A1CR2	F 19 -17	A3A1R119	19 -24	A3A1R95	F 19 -60
A3A1CR3	F 19 -17	A3A1R120	19 -58	A3A1R97	F 19 -57
A3A1CR4	F 19 -17	A3A1R122	F 19 -55	A3A1U1	19 -43
A3A1CR7	F 19 -17	A3A1R127	F 19 -27	A3A1U10	F 19 -6
A3A1CR8	F 19 -17	A3A1R128	F 19 -27	A3A1U11	F 19 -6
A3A1CR9	F 19 -17	A3A1R130	19 -16	A3A1U12	F 19 -6
A3A1C1	19 -42	A3A1R131	19 -18	A3A1U13	F 19 -6
A3A1C17	F 19 -44	A3A1R136	F 19 -3	A3A1U14	F 19 -6
A3A1C18	19 -38	A3A1R137	F 19 -31	A3A1U15	19 -29
A3A1C19	F 19 -19	A3A1R138	F 19 -15	A3A1U16	19 -52
A3A1C2	19 -40	A3A1R140	19 -59	A3A1U2	19 -48
A3A1C20	19 -4	A3A1R141	F 19 -59	A3A1U3	19 -35
A3A1C21	F 19 -40	A3A1R150	19 -54	A3A1U4	19 -28
A3A1C22	F 19 -49	A3A1R19	19 -32	A3A1U6	19 -53
A3A1C23	F 19 -42	A3A1R2	19 -46	A3A1U7	19 -6
A3A1C24	F 19 -49	A3A1R20	19 -36	A3A1U8	F 19 -6
A3A1C25	F 19 -19	A3A1R21	19 -37	A3A1U9	F 19 -6
A3A1C26	F 19 -4	A3A1R22	19 -34	A3P1	18 -8
A3A1C27	F 19 -4	A3A1R23	19 -3	A3R47	18 -3
A3A1C28	19 -5	A3A1R25	19 -30	A3S1	18 -6
A3A1C29	F 19 -5	A3A1R26	F 19 -30	A3S2	F 18 -6
A3A1C3	19 -19	A3A1R27	F 19 -30	A3S3	18 -7
A3A1C30	F 19 -4	A3A1R28	19 -41	A3TP1	18 -4
A3A1C31	19 -13	A3A1R29	19 -10	A4	1 -50
A3A1C32	19 -2	A3A1R3	19 -39	A5	1 -123
A3A1C35	F 19 -2	A3A1R30	F 19 -3	A5AT1	25 -33
A3A1C38	F 19 -4	A3A1R31	19 -51	A5A1	25 -11
A3A1C39	F 19 -4	A3A1R32	F 19 -30	A5A1CR1	26 -33
A3A1C4	F 19 -42	A3A1R33	19 -50	A5A1CR2	26 -5
A3A1C40	F 19 -13	A3A1R34	F 19 -46	A5A1C1	26 -4
A3A1C41	F 19 -4	A3A1R35	19 -62	A5A1C10	F 26 -15
A3A1C42	F 19 -4	A3A1R36	F 19 -3	A5A1C11	26 -13
A3A1C43	F 19 -5	A3A1R37	F 19 -3	A5A1C12	F 26 -14
A3A1C44	F 19 -40	A3A1R38	19 -8	A5A1C13	F 26 -12
A3A1C45	F 19 -5	A3A1R39	19 -61	A5A1C14	F 26 -12
A3A1C46	F 19 -4	A3A1R41	19 -7	A5A1C15	F 26 -15
A3A1C5	19 -44	A3A1R42	F 19 -7	A5A1C16	26 -39
A3A1C51	F 19 -2	A3A1R44	19 -9	A5A1C17	26 -1

REFERENCE DESIGNATION	FIGURE AND INDEX NO.	REFERENCE DESIGNATION	FIGURE AND INDEX NO.	REFERENCE DESIGNATION	FIGURE AND INDEX NO.
A5A1C18	26 -3	A5A2C1	28 -1	A5Q1	25 -20
A5A1C19	F 26 -4	A5A2C2	28 -8	A5Q2	25 -23
A5A1C2	26 -12	A5A2C3	28 -11	A5RT1	25 -28
A5A1C20	F 26 -3	A5A2C4	F 28 -1	A6	F 1 -110
A5A1C21	26 -6	A5A2C6	28 -12	A6J1	1 -114
A5A1C22	26 -9	A5A2C7	28 -13	A7	1 -49
A5A1C23	26 -28	A5A2E2	F 28 -14	A7	12 -
A5A1C24	26 -42	A5A2E3	F 28 -14	A7A1	12 -9
A5A1C3	F 26 -12	A5A2E4	F 28 -14	A7A1CR1	13 -17
A5A1C4	26 -15	A5A2L1	28 -2	A7A1CR2	F 13 -17
A5A1C5	26 -21	A5A2L2	28 -3	A7A1CR3	F 13 -17
A5A1C6	26 -14	A5A2R1	28 -7	A7A1CR4	13 -22
A5A1C7	26 -17	A5A2R2	28 -9	A7A1CR5	F 13 -22
A5A1C8	F 26 -12	A5A2R3	F 28 -7	A7A1C1	13 -28
A5A1C9	F 26 -12	A5A2R4	28 -6	A7A1C10	13 -9
A5A1E10	F 26 -41	A5A2R5	28 -5	A7A1C11	13 -7
A5A1E11	F 26 -41	A5A2R6	28 -10	A7A1C12	F 13 -3
A5A1E12	F 26 -41	A5A2R7	28 -4	A7A1C13	F 13 -3
A5A1E13	F 26 -41	A5A3	25 -22	A7A1C14	13 -2
A5A1E2	F 26 -40	A5A3E1	27 -7	A7A1C15	F 13 -2
A5A1E3	F 26 -40	A5A3E10	F 29 -7	A7A1C16	F 13 -2
A5A1E5	F 26 -41	A5A3E11	F 29 -7	A7A1C17	F 13 -2
A5A1E6	F 26 -41	A5A3E2	29 -8	A7A1C18	F 13 -2
A5A1E7	F 26 -41	A5A3E3	F 29 -7	A7A1C19	F 13 -2
A5A1E8	F 26 -41	A5A3E4	F 29 -7	A7A1C2	13 -3
A5A1E9	F 26 -41	A5A3E5	F 29 -7	A7A1C20	F 13 -2
A5A1L1	26 -10	A5A3E6	F 29 -7	A7A1C21	13 -15
A5A1L2	F 26 -10	A5A3E7	F 29 -7	A7A1C22	F 13 -2
A5A1L3	26 -2	A5A3E8	F 29 -7	A7A1C23	F 13 -15
A5A1L4	26 -38	A5A3E9	F 29 -7	A7A1C26	F 13 -2
A5A1L5	F 26 -2	A5A3RT2	27 -1	A7A1C27	F 13 -3
A5A1L6	F 26 -10	A5A3R1	27 -2	A7A1C28	F 13 -3
A5A1L7	26 -11	A5A3R2	27 -3	A7A1C29	F 13 -2
A5A1Q1	26 -18	A5A3R3	27 -4	A7A1C3	F 13 -3
A5A1Q2	F 26 -18	A5A3R4	F 27 -4	A7A1C30	13 -30
A5A1Q3	26 -35	A5A3R5	27 -5	A7A1C31	13 -29
A5A1R1	26 -24	A5A3R6	27 -6	A7A1C32	F 13 -2
A5A1R10	F 26 -23	A5C1	25 -8	A7A1C33	13 -31
A5A1R11	26 -32	A5C10	25 -27	A7A1C34	F 13 -2
A5A1R12	26 -34	A5C13	25 -32	A7A1C35	F 13 -2
A5A1R13	26 -36	A5C15	F 25 -32	A7A1C36	13 -25
A5A1R14	26 -37	A5C17	F 25 -8	A7A1C37	13 -19
A5A1R15	26 -8	A5C18	F 25 -8	A7A1C38	13 -18
A5A1R16	F 26 -7	A5C19	25 -7	A7A1C39	13 -23
A5A1R17	26 -20	A5C2	25 -15	A7A1C4	13 -32
A5A1R18	26 -29	A5C3A	25 -16	A7A1C40	F 13 -3
A5A1R19	F 26 -30	A5C3B	25 -17	A7A1C41	13 -20
A5A1R2	26 -26	A5C4	F 25 -15	A7A1C42	F 13 -20
A5A1R20	26 -31	A5C5	F 25 -17	A7A1C43	F 13 -12
A5A1R3	26 -7	A5C6	F 25 -15	A7A1C44	F 13 -18
A5A1R4	26 -23	A5C7	F 25 -16	A7A1C45	F 13 -3
A5A1R5	26 -25	A5C8	F 25 -15	A7A1C46	13 -26
A5A1R6	26 -22	A5C9	25 -26	A7A1C47	F 13 -2
A5A1R7	26 -16	A5E1	25 -5	A7A1C48	13 -24
A5A1R8	26 -30	A5HY1	25 -38	A7A1C49	F 13 -3
A5A1R9	26 -19	A5J1	25 -4	A7A1C5	13 -13
A5A1TP1	F 26 -40	A5L1	25 -18	A7A1C50	F 13 -2
A5A1TP2	F 26 -40	A5L2	F 25 -18	A7A1C51	F 13 -2
A5A1TP3	F 26 -40	A5L3	F 25 -18	A7A1C52	F 13 -2
A5A1U1	26 -27	A5L4	F 25 -18	A7A1C53	F 13 -2
A5A2	25 -24	A5L5	25 -25	A7A1C54	F 13 -3

REFERENCE DESIGNATION	FIGURE AND INDEX NO.	REFERENCE DESIGNATION	FIGURE AND INDEX NO.	REFERENCE DESIGNATION	FIGURE AND INDEX NO.
A7A1C55	13 -27	A7A1L10	F 13 -16	A7A1R47	F 13 -35
A7A1C56	F 13 -2	A7A1L11	F 13 -21	A7A1R48	13 -48
A7A1C6	13 -6	A7A1L2	13 -11	A7A1R49	F 13 -35
A7A1C7	13 -12	A7A1L3	F 13 -11	A7A1R50	F 13 -54
A7A1C8	F 13 -3	A7A1L4	13 -10	A7A1R51	F 13 -56
A7A1C9	13 -8	A7A1L5	13 -4	A7A1R52	F 13 -37
A7A1E1	13 -65	A7A1L6	13 -1	A7A1R53	F 13 -37
A7A1E10	F 13 -64	A7A1L7	13 -21	A7A1R54	F 13 -34
A7A1E11	F 13 -64	A7A1L8	13 -16	A7A1R55	F 13 -48
A7A1E12	F 13 -64	A7A1L9	F 13 -16	A7A1R56	13 -57
A7A1E13	F 13 -64	A7A1Q1	13 -5	A7A1R6	13 -37
A7A1E14	F 13 -64	A7A1Q10	F 13 -5	A7A1R7	F 13 -33
A7A1E15	F 13 -64	A7A1Q2	F 13 -5	A7A1R8	13 -35
A7A1E16	F 13 -64	A7A1Q3	F 13 -5	A7A1R9	13 -41
A7A1E17	F 13 -64	A7A1Q4	F 13 -5	A7A1U1	13 -40
A7A1E18	F 13 -64	A7A1Q5	F 13 -5	A7A1U10	F 13 -43
A7A1E19	F 13 -64	A7A1Q6	F 13 -5	A7A1U11	F 13 -44
A7A1E2	F 13 -65	A7A1Q7	F 13 -5	A7A1U12	F 13 -43
A7A1E20	F 13 -64	A7A1Q8	F 13 -5	A7A1U13	F 13 -44
A7A1E21	F 13 -64	A7A1Q9	F 13 -5	A7A1U14	F 13 -44
A7A1E22	F 13 -64	A7A1R1	13 -58	A7A1U15	F 13 -44
A7A1E23	F 13 -64	A7A1R10	13 -38	A7A1U16	F 13 -40
A7A1E24	F 13 -64	A7A1R11	F 13 -38	A7A1U2	13 -42
A7A1E25	F 13 -64	A7A1R12	13 -34	A7A1U3	13 -44
A7A1E26	F 13 -64	A7A1R13	13 -39	A7A1U4	F 13 -44
A7A1E27	F 13 -64	A7A1R14	F 13 -35	A7A1U5	F 13 -44
A7A1E28	F 13 -64	A7A1R15	F 13 -54	A7A1U6	F 13 -44
A7A1E29	F 13 -64	A7A1R16	F 13 -34	A7A1U7	F 13 -40
A7A1E3	13 -64	A7A1R17	F 13 -37	A7A1U8	13 -45
A7A1E30	F 13 -64	A7A1R18	F 13 -35	A7A1U9	13 -43
A7A1E31	F 13 -64	A7A1R19	F 13 -34	A7A1Y1	13 -53
A7A1E32	F 13 -64	A7A1R2	13 -33	A7A2	12 -10
A7A1E33	F 13 -64	A7A1R20	F 13 -35	A7A2CR1	14 -16
A7A1E34	F 13 -64	A7A1R21	13 -36	A7A2CR2	F 14 -16
A7A1E35	F 13 -64	A7A1R22	13 -49	A7A2CR3	F 14 -16
A7A1E36	F 13 -64	A7A1R23	13 -62	A7A2CR4	F 14 -16
A7A1E37	F 13 -64	A7A1R24	13 -59	A7A2CR5	F 14 -16
A7A1E38	F 13 -64	A7A1R25	13 -60	A7A2C1	14 -4
A7A1E39	F 13 -64	A7A1R26	F 13 -33	A7A2C10	F 14 -4
A7A1E4	F 13 -64	A7A1R27	13 -61	A7A2C11	F 14 -4
A7A1E40	F 13 -64	A7A1R28	F 13 -37	A7A2C12	14 -8
A7A1E41	F 13 -64	A7A1R29	F 13 -56	A7A2C13	F 14 -8
A7A1E42	F 13 -64	A7A1R3	13 -54	A7A2C14	F 14 -4
A7A1E43	F 13 -64	A7A1R30	F 13 -54	A7A2C15	F 14 -4
A7A1E44	F 13 -64	A7A1R31	F 13 -34	A7A2C16	14 -19
A7A1E45	F 13 -64	A7A1R32	13 -52	A7A2C17	14 -11
A7A1E46	F 13 -64	A7A1R33	F 13 -34	A7A2C18	F 14 -11
A7A1E47	F 13 -64	A7A1R34	F 13 -52	A7A2C19	F 14 -4
A7A1E48	F 13 -64	A7A1R35	F 13 -52	A7A2C2	14 -14
A7A1E49	F 13 -64	A7A1R36	13 -55	A7A2C20	F 14 -4
A7A1E5	F 13 -64	A7A1R37	F 13 -34	A7A2C21	F 14 -4
A7A1E50	F 13 -64	A7A1R38	F 13 -34	A7A2C22	F 14 -4
A7A1E51	F 13 -64	A7A1R39	13 -51	A7A2C23	F 14 -1
A7A1E52	F 13 -64	A7A1R4	13 -56	A7A2C24	F 14 -1
A7A1E53	F 13 -64	A7A1R40	13 -50	A7A2C25	14 -17
A7A1E54	F 13 -64	A7A1R41	13 -46	A7A2C26	F 14 -1
A7A1E6	F 13 -64	A7A1R42	F 13 -35	A7A2C27	F 14 -1
A7A1E7	F 13 -64	A7A1R43	F 13 -34	A7A2C28	F 14 -1
A7A1E8	F 13 -64	A7A1R44	F 13 -34	A7A2C29	14 -23
A7A1E9	F 13 -64	A7A1R45	F 13 -34	A7A2C3	14 -13
A7A1L1	13 -14	A7A1R46	13 -47	A7A2C30	F 14 -1

REFERENCE DESIGNATION	FIGURE AND INDEX NO.	REFERENCE DESIGNATION.	FIGURE AND INDEX NO.	REFERENCE DESIGNATION	FIGURE AND INDEX NO.
A7A2C31	F 14 -1	A7A2HY1	14 -22	A7A2U1	14 -32
A7A2C32	F 14 -1	A7A2L1	14 -21	A7A2U10	14 -58
A7A2C33	14 -24	A7A2L2	14 -15	A7A2U11	F 14 -43
A7A2C34	F 14 -23	A7A2L3	14 -20	A7A2U12	14 -57
A7A2C35	F 14 -4	A7A2L4	14 -7	A7A2U2	14 -39
A7A2C36	F 14 -4	A7A2L5	14 -2	A7A2U3	14 -33
A7A2C37	F 14 -4	A7A2L6	14 -3	A7A2U4	F 14 -33
A7A2C38	F 14 -4	A7A2L7	F 14 -2	A7A2U5	F 14 -33
A7A2C39	F 14 -17	A7A2L8	F 14 -3	A7A2U6	14 -43
A7A2C4	14 -12	A7A2Q1	14 -9	A7A2U7	14 -55
A7A2C40	F 14 -4	A7A2Q2	14 -5	A7A2U8	F 14 -39
A7A2C41	F 14 -17	A7A2Q3	F 14 -5	A7A2U9	14 -50
A7A2C42	F 14 -4	A7A2Q4	F 14 -5	A7A3	12 -11
A7A2C43	F 14 -17	A7A2Q5	F 14 -5	A7A3CR1	15 -8
A7A2C44	14 -25	A7A2Q6	F 14 -5	A7A3CR2	F 15 -8
A7A2C45	14 -26	A7A2R1	14 -27	A7A3CR3	15 -9
A7A2C46	F 14 -25	A7A2R10	14 -44	A7A3CR4	F 15 -8
A7A2C47	F 14 -4	A7A2R11	14 -45	A7A3C1	15 -1
A7A2C48	14 -10	A7A2R14	14 -28	A7A3C10	15 -3
A7A2C5	F 14 -13	A7A2R15	14 -46	A7A3C11	F 15 -1
A7A2C6	F 14 -14	A7A2R16	14 -47	A7A3C12	15 -4
A7A2C7	F 14 -4	A7A2R17	F 14 -28	A7A3C13	F 15 -3
A7A2C8	14 -1	A7A2R2	14 -30	A7A3C14	15 -2
A7A2C9	F 14 -4	A7A2R20	14 -38	A7A3C15	F 15 -1
A7A2E1	14 -63	A7A2R21	14 -36	A7A3C16	F 15 -4
A7A2E10	F 14 -63	A7A2R22	14 -35	A7A3C17	F 15 -1
A7A2E11	F 14 -63	A7A2R23	F 14 -28	A7A3C19	F 15 -1
A7A2E12	F 14 -63	A7A2R24	F 14 -37	A7A3C2	F 15 -1
A7A2E13	F 14 -63	A7A2R25	14 -56	A7A3C20	F 15 -1
A7A2E14	F 14 -63	A7A2R26	14 -49	A7A3C21	F 15 -6
A7A2E15	F 14 -63	A7A2R27	14 -54	A7A3C22	15 -10
A7A2E16	F 14 -63	A7A2R28	F 14 -37	A7A3C24	F 15 -1
A7A2E17	F 14 -63	A7A2R29	14 -51	A7A3C3	15 -6
A7A2E18	F 14 -63	A7A2R3	14 -37	A7A3C4	F 15 -6
A7A2E19	F 14 -63	A7A2R30	14 -52	A7A3C5	15 -13
A7A2E2	F 14 -63	A7A2R31	14 -53	A7A3C6	F 15 -13
A7A2E20	F 14 -63	A7A2R34	F 14 -37	A7A3C7	F 15 -6
A7A2E21	F 14 -63	A7A2R35	F 14 -30	A7A3C8	F 15 -6
A7A2E22	F 14 -63	A7A2R36	F 14 -27	A7A3E1	15 -42
A7A2E23	F 14 -63	A7A2R37	F 14 -28	A7A3E10	F 15 -42
A7A2E24	F 14 -63	A7A2R38	F 14 -28	A7A3E11	F 15 -43
A7A2E25	F 14 -63	A7A2R39	14 -29	A7A3E12	F 15 -42
A7A2E26	F 14 -63	A7A2R4	14 -59	A7A3E13	F 15 -43
A7A2E27	F 14 -63	A7A2R40	F 14 -37	A7A3E14	F 15 -43
A7A2E28	F 14 -63	A7A2R41	14 -60	A7A3E15	F 15 -43
A7A2E29	F 14 -63	A7A2R42	F 14 -27	A7A3E16	F 15 -43
A7A2E3	F 14 -63	A7A2R43	14 -62	A7A3E17	F 15 -43
A7A2E30	F 14 -63	A7A2R44	F 14 -28	A7A3E18	F 15 -43
A7A2E31	F 14 -63	A7A2R45	F 14 -28	A7A3E19	F 15 -43
A7A2E32	F 14 -63	A7A2R46	F 14 -29	A7A3E2	15 -43
A7A2E33	F 14 -63	A7A2R47	14 -31	A7A3E20	F 15 -42
A7A2E34	F 14 -63	A7A2R48	F 14 -60	A7A3E21	F 15 -42
A7A2E35	F 14 -63	A7A2R49	14 -61	A7A3E22	F 15 -42
A7A2E36	F 14 -63	A7A2R5	14 -41	A7A3E23	F 15 -42
A7A2E37	F 14 -63	A7A2R50	F 14 -28	A7A3E24	F 15 -42
A7A2E4	F 14 -63	A7A2R51	14 -18	A7A3E25	F 15 -42
A7A2E5	F 14 -63	A7A2R52	14 -6	A7A3E26	F 15 -42
A7A2E6	F 14 -63	A7A2R6	14 -40	A7A3E27	F 15 -42
A7A2E7	F 14 -63	A7A2R7	14 -48	A7A3E28	F 15 -43
A7A2E8	F 14 -63	A7A2R8	14 -34	A7A3E29	F 15 -43
A7A2E9	F 14 -63	A7A2R9	14 -42	A7A3E3	F 15 -43

REFERENCE DESIGNATION	FIGURE AND INDEX NO.	REFERENCE DESIGNATION	FIGURE AND INDEX NO.	REFERENCE DESIGNATION	FIGURE AND INDEX NO.
A7A3E4	F 15 -43	A7C6	F 12 -3	A9A2U19C	4 -10
A7A3E5	F 15 -43	A7C7	F 12 -3	A9A2U2A	4 -2
A7A3E6	F 15 -42	A7C8	F 12 -3	A9A2U2B	F 4 -4
A7A3E7	F 15 -43	A7C9	F 12 -3	A9A2U20A	4 -12
A7A3E8	F 15 -43	A7J1	12 -16	A9A2U20B	F 4 -4
A7A3E9	F 15 -42	A7J2	12 -13	A9A2U20C	F 4 -9
A7A3K1	15 -5	A7Q1	12 -7	A9A2U21A	F 4 -21
A7A3K2	15 -7	A7S1	12 -5	A9A2U21B	F 4 -17
A7A3K3	15 -12	A8	1 -53	A9A2U22A	F 4 -21
A7A3Q1	15 -44	A9	1 -11	A9A2U22B	F 4 -17
A7A3Q2	15 -11	A9A1	2 -6	A9A2U22C	F 4 -20
A7A3Q3	F 15 -11	A9A1C1	3 -1	A9A2U23A	F 4 -13
A7A3Q4	F 15 -11	A9A1C2	F 3 -1	A9A2U23B	F 4 -17
A7A3Q5	F 15 -11	A9A1C3	F 3 -1	A9A2U23C	F 4 -17
A7A3R1	15 -32	A9A1R1	3 -3	A9A2U24A	4 -22
A7A3R11	F 15 -32	A9A1U1	3 -2	A9A2U24B	F 4 -17
A7A3R12	15 -24	A9A1U2	F 3 -2	A9A2U24C	F 4 -17
A7A3R13	15 -25	A9A1U3	F 3 -2	A9A2U25A	F 4 -14
A7A3R15	15 -26	A9A1U4	F 3 -2	A9A2U25B	F 4 -13
A7A3R16	15 -27	A9A1U5	F 3 -2	A9A2U25C	F 4 -17
A7A3R2	F 15 -32	A9A1U6	F 3 -2	A9A2U26A	F 4 -21
A7A3R21	15 -28	A9A2	2 -17	A9A2U26B	4 -9
A7A3R22	15 -29	A9A2C10	F 4 -1	A9A2U27A	F 4 -21
A7A3R23	15 -20	A9A2C11	F 4 -1	A9A2U27B	F 4 -14
A7A3R24	15 -21	A9A2C12	F 4 -1	A9A2U27C	F 4 -4
A7A3R25	15 -18	A9A2C13	F 4 -1	A9A2U28A	F 4 -15
A7A3R26	15 -19	A9A2C14	F 4 -1	A9A2U28B	F 4 -15
A7A3R27	15 -16	A9A2C18	F 4 -1	A9A2U28C	4 -11
A7A3R29	15 -41	A9A2C19	F 4 -1	A9A2U29A	4 -4
A7A3R3	15 -38	A9A2C20	F 4 -1	A9A2U29B	F 4 -12
A7A3R30	15 -15	A9A2C21	F 4 -1	A9A2U29C	F 4 -4
A7A3R31	15 -32	A9A2C22	F 4 -1	A9A2U3A	F 4 -2
A7A3R32	15 -14	A9A2C23	F 4 -1	A9A2U3B	F 4 -18
A7A3R33	15 -30	A9A2C24	F 4 -1	A9A2U3C	4 -6
A7A3R34	15 -33	A9A2C25	4 -7	A9A2U30A	F 4 -16
A7A3R35	15 -34	A9A2C30	F 4 -18	A9A2U30C	F 4 -9
A7A3R36	15 -28	A9A2C9	4 -1	A9A2U4B	F 4 -4
A7A3R37	15 -29	A9A2U1A	4 -3	A9A2U4C	4 -19
A7A3R38	15 -31	A9A2U10B	F 4 -17	A9A2U5A	4 -14
A7A3R39	F 15 -30	A9A2U10C	F 4 -4	A9A2U6A	F 4 -3
A7A3R4	15 -36	A9A2U11A	4 -13	A9A2U6B	F 4 -14
A7A3R40	F 15 -32	A9A2U11B	F 4 -5	A9A2U7A	4 -16
A7A3R6	15 -40	A9A2U12A	4 -15	A9A2U7B	F 4 -5
A7A3R7	15 -39	A9A2U12B	F 4 -5	A9A2U7C	F 4 -20
A7A3R8	15 -23	A9A2U12C	F 4 -20	A9A2U8A	F 4 -2
A7A3R9	F 15 -32	A9A2U13A	F 4 -15	A9A2U8B	F 4 -5
A7A3U1	15 -37	A9A2U13B	F 4 -5	A9A2U8C	F 4 -6
A7A3U2	15 -35	A9A2U13C	F 4 -6	A9A2U9B	4 -17
A7A3U3	15 -22	A9A2U14A	F 4 -15	A9A2U9C	4 -8
A7A3U4	15 -17	A9A2U14B	F 4 -5	A9CR1	2 -11
A7C1	12 -3	A9A2U14C	F 4 -19	A9CR2	F 2 -11
A7C10	12 -6	A9A2U15A	4 -5	A9E1	2 -14
A7C11	F 12 -6	A9A2U15B	F 4 -17	A9E2	F 2 -14
A7C12	F 12 -6	A9A2U15C	F 4 -4	A9E3	F 2 -14
A7C13	F 12 -6	A9A2U16A	4 -21	A9E4	F 2 -14
A7C14	F 12 -6	A9A2U17A	F 4 -21	A9J1	2 -20
A7C15	F 12 -6	A9A2U17C	F 4 -20	A9J2	2 -12
A7C2	F 12 -3	A9A2U18A	F 4 -13	A9J3	F 2 -12
A7C3	F 12 -3	A9A2U18C	F 4 -9	A9J4	F 2 -12
A7C4	F 12 -3	A9A2U19A	4 -18	A9K1	2 -7
A7C5	F 12 -3	A9A2U19B	F 4 -18	A9S1	2 -13

REFERENCE DESIGNATION	FIGURE AND INDEX NO.
A9S10	F 2 -10
A9S11	F 2 -10
A9S2	2 -9
A9S3	2 -10
A9S4	F 2 -10
A9S5	F 2 -10
A9S6	F 2 -10
A9S7	F 2 -10
A9S8	F 2 -10
A9S9	F 2 -10
CR1	1 -73
CR10	F 1 -73
CR11	F 1 -73
CR12	1 -139
CR13	F 1 -139
CR14	F 1 -139
CR15	F 1 -139
CR16	F 1 -139
CR17	1 -43
CR2	1 -74
CR3	F 1 -73
CR4	F 1 -74
CR5	F 1 -73
CR6	1 -75
CR7	F 1 -73
CR8	1 -61
CR8	F 1 -73
CR9	F 1 -75
C1	1 -45
C2	1 -39
C3	1 -60
C4	1 -136
C5	F 1 -136
C6	F 1 -136
FL1	1 -162
FL2	F 1 -162
F1	1 -156
F2	F 1 -156
F3	1 -155
F4	F 1 -155
F5	F 1 -156
F6	F 1 -155
J1	1 -100
J10	F 1 -97
J11	1 -80
J12	1 -124
J2	1 -146
J3	1 -109
J4	F 1 -109
J5	1 -141
J6	F 1 -141
J7	1 -142
J8	1 -97
J9	F 1 -97
K1	1 -48
L1	1 -42
L2	1 -44
M1	1 -79
P1	1 -152
P2	1 -149
P3	1 -121
P4	1 -126
P5	1 -128
P6	1 -143
P7	1 -18
R1	1 -85
R2	1 -82
R3	1 -55
R4	1 -56
R5	1 -57
R6	1 -58
R7	1 -59
R8	1 -40
S1	1 -84
S2	1 -87
S3	1 -88
S4	1 -77
S5	1 -36
S6	1 -81
T1	1 -41
W1	1 -166
XF1	1 -157
XF2	F 1 -157
XF3	F 1 -157
XF4	F 1 -157
1A3Q2	8 -11

CHAPTER 8

CIRCUIT DIAGRAMS

8-1. SCOPE. This chapter contains block diagrams, schematic diagrams, and a wire run list for the MRC.

8-2. BLOCK DIAGRAMS. Block diagrams for the MRC are shown in figures 8-1 through 8-7. These block diagrams support the theory of operation covered in Chapter 5.

8-3. SCHEMATIC DIAGRAMS. Schematic diagrams for serviceable modules of the MRC are shown in figures 8-8 through 8-23.

8-4. WIRE RUN LIST AND WIRING DIAGRAM. The wire run list of table 8-1 contains a tabulation of intermodular connections within the MRC identified by source, destination, wire gage, and color. Figure 8-24 is a wiring diagram for the MRC.

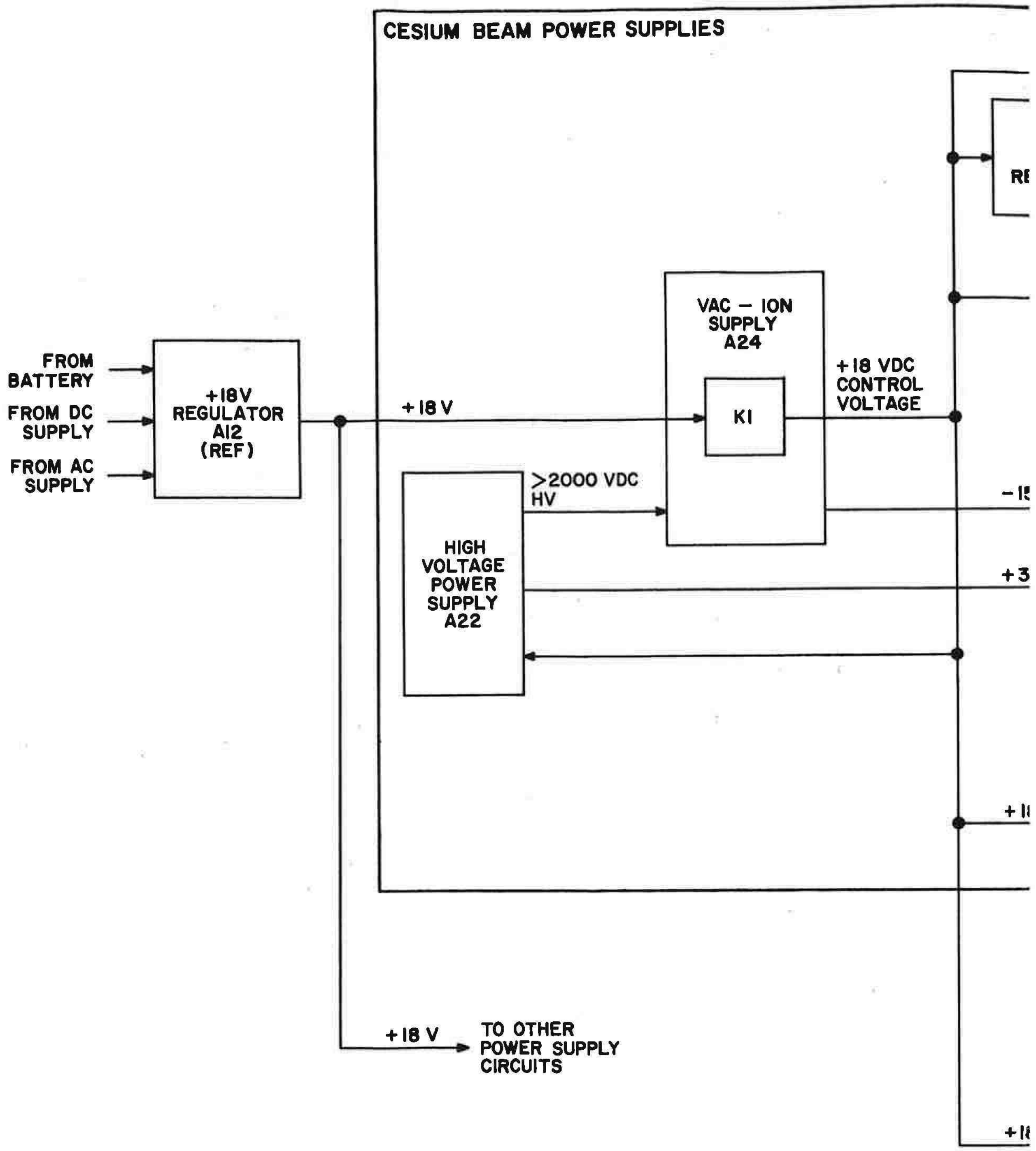
CESIUM BEAM POWER SUPPLIES
FROM BATTERY
FROM DC SUPPLY
FROM AC SUPPLY
+18V REGULATOR A12 (REF)
+18 V
VAC – ION SUPPLY A24
K1
+18 VDC CONTROL VOLTAGE
>2000 VDC HV
HIGH VOLTAGE POWER SUPPLY A22
+18 V
TO OTHER POWER SUPPLY CIRCUITS

4458-LH-042A

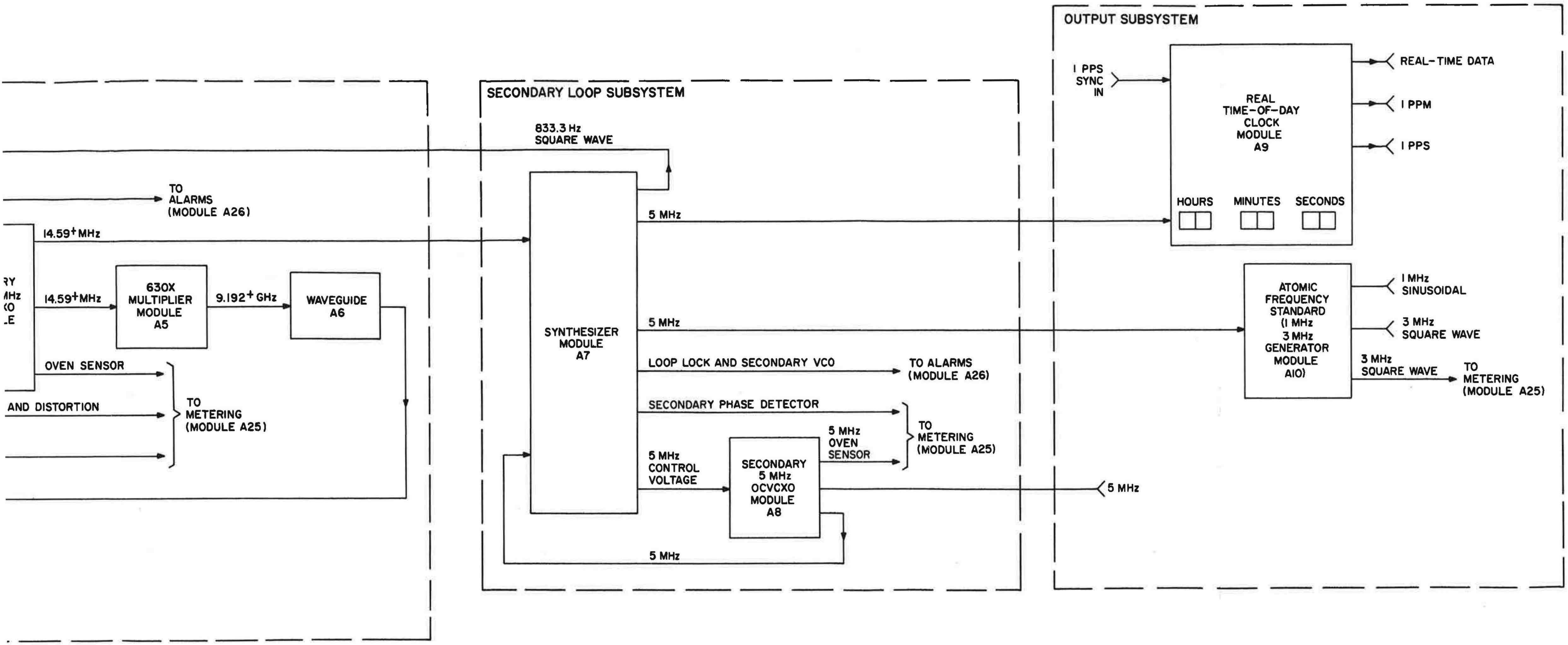

Figure 8-1. MRC, Functional System Block Diagram

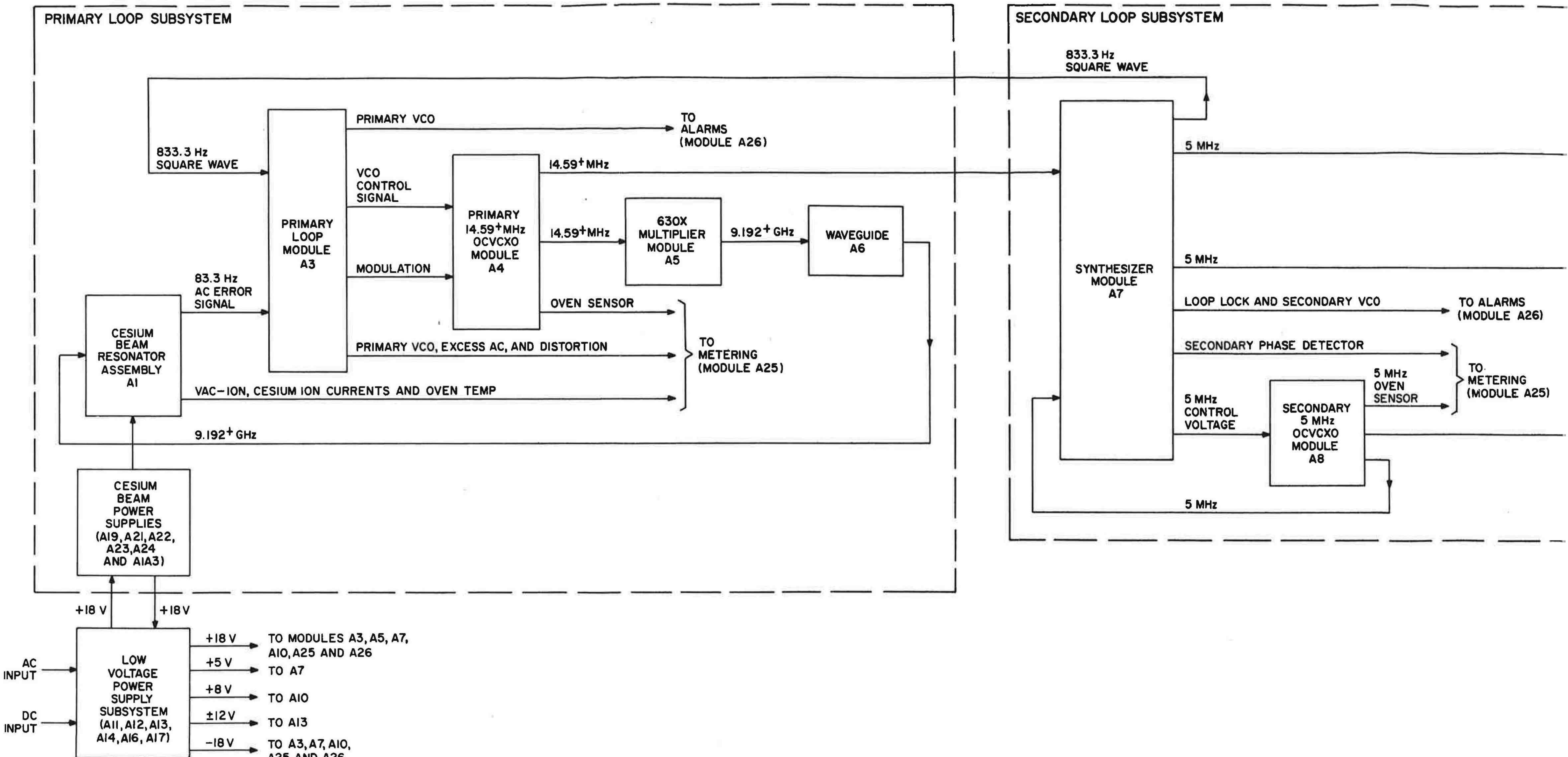

PRIMARY LOOP SUBSYSTEM
SECONDARY LOOP SUBSYSTEM
833.3 Hz SQUARE WAVE
PRIMARY VCO
TO ALARMS (MODULE A26)
833.3 Hz SQUARE WAVE
VCO CONTROL SIGNAL
14.59+ MHz
PRIMARY LOOP MODULE A3
PRIMARY 14.59+ MHz OCVCXO MODULE A4
14.59+ MHz
630X MULTIPLIER MODULE A5
9.192+ GHz
WAVEGUIDE A6
83.3 Hz AC ERROR SIGNAL
MODULATION
OVEN SENSOR
CESIUM BEAM RESONATOR ASSEMBLY A1
PRIMARY VCO, EXCESS AC, AND DISTORTION
TO METERING (MODULE A25)
VAC-ION, CESIUM ION CURRENTS AND OVEN TEMP
9.192+ GHz
CESIUM BEAM POWER SUPPLIES (A19, A21, A22, A23, A24 AND A1A3)
5 MHz
SYNTHESIZER MODULE A7
5 MHz
LOOP LOCK AND SECONDARY VCO
TO ALARMS (MODULE A26)
SECONDARY PHASE DETECTOR
5 MHz OVEN SENSOR
TO METERING (MODULE A25)
5 MHz CONTROL VOLTAGE
SECONDARY 5 MHz OCVCXO MODULE A8
5 MHz
+18 V
+18 V
AC INPUT
DC INPUT
LOW VOLTAGE POWER SUPPLY SUBSYSTEM (A11, A12, A13, A14, A16, A17)
+18 V
TO MODULES A3, A5, A7, A10, A25 AND A26
+5 V
TO A7
+8 V
TO A10
±12 V
TO A13
−18 V
TO A3, A7, A10, A25 AND A26

4458-LH-041A

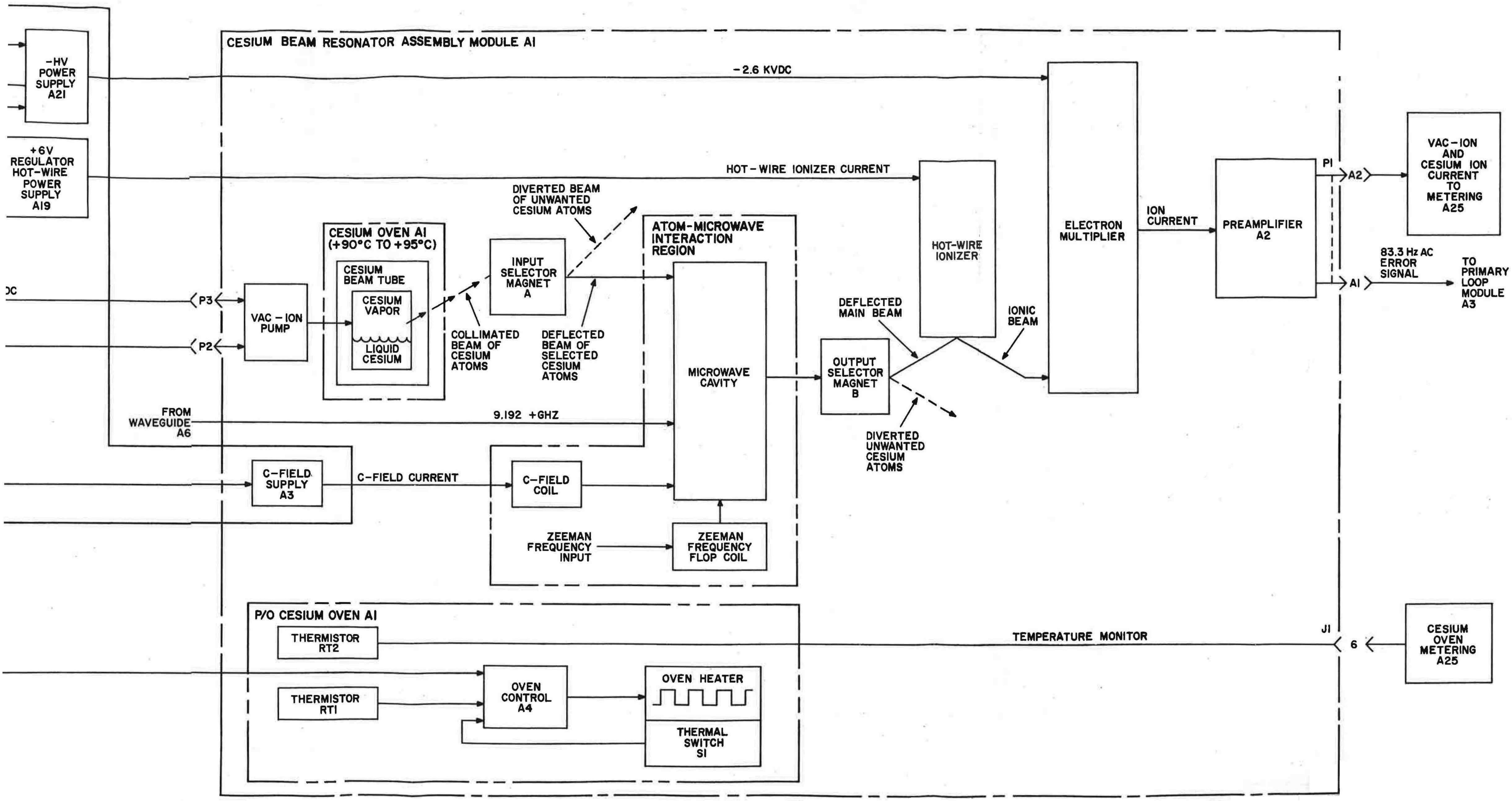

Figure 8-2. Primary Loop Subsystem, Functional Block Diagram (Sheet 1 of 2)

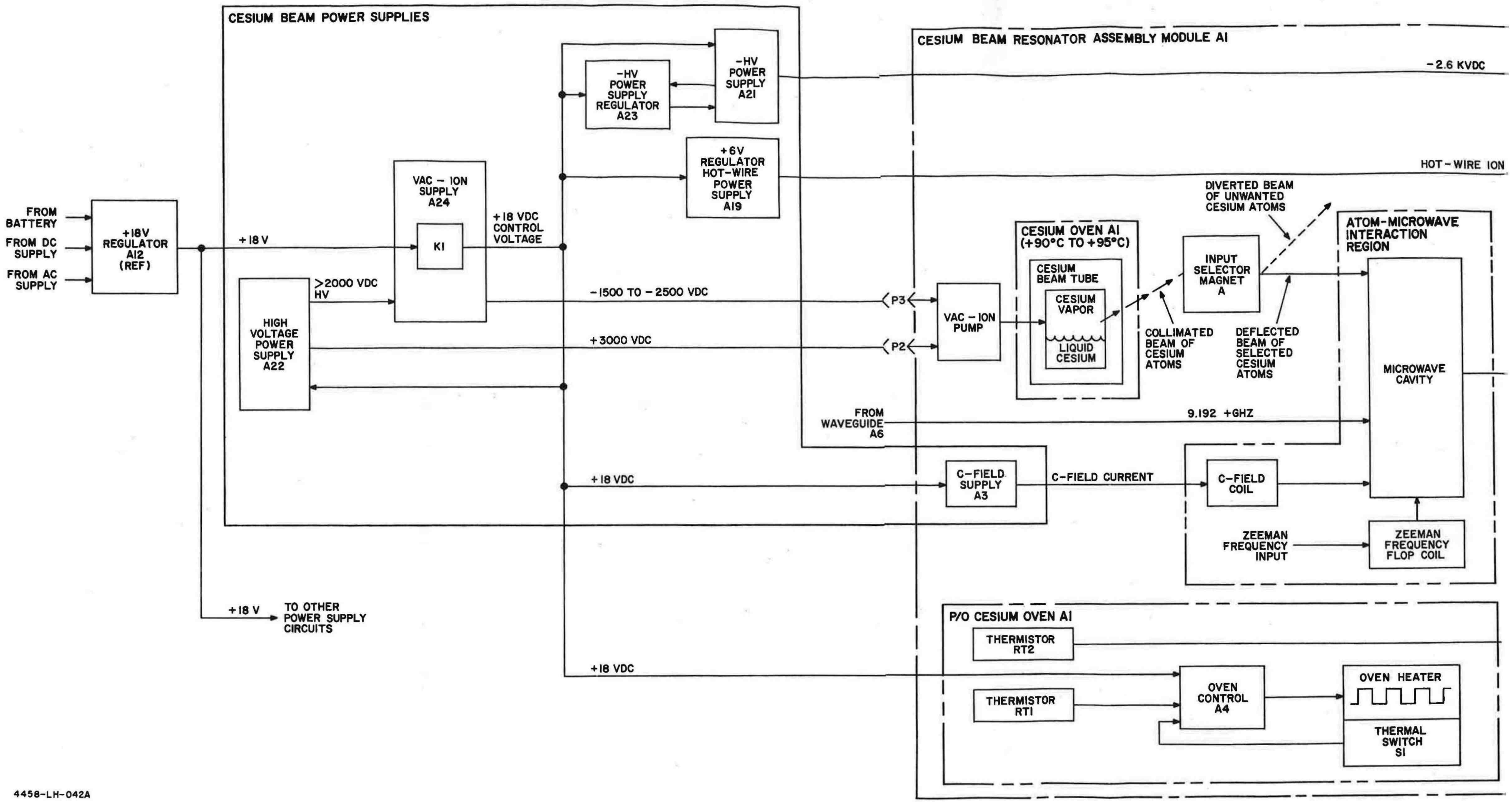

CESIUM BEAM POWER SUPPLIES
CESIUM BEAM RESONATOR ASSEMBLY MODULE A1
FROM BATTERY
FROM DC SUPPLY
FROM AC SUPPLY
+18V REGULATOR A12 (REF)
+18 V
VAC - ION SUPPLY A24
K1
+18 VDC CONTROL VOLTAGE
-HV POWER SUPPLY REGULATOR A23
-HV POWER SUPPLY A21
+6V REGULATOR HOT-WIRE POWER SUPPLY A19
-2.6 KVDC
HOT-WIRE ION
HIGH VOLTAGE POWER SUPPLY A22
>2000 VDC HV
-1500 TO -2500 VDC
+3000 VDC
P3
P2
VAC - ION PUMP
CESIUM OVEN A1 (+90°C TO +95°C)
CESIUM BEAM TUBE
CESIUM VAPOR
LIQUID CESIUM
COLLIMATED BEAM OF CESIUM ATOMS
INPUT SELECTOR MAGNET A
DIVERTED BEAM OF UNWANTED CESIUM ATOMS
DEFLECTED BEAM OF SELECTED CESIUM ATOMS
ATOM-MICROWAVE INTERACTION REGION
MICROWAVE CAVITY
FROM WAVEGUIDE A6
9.192 +GHZ
+18 VDC
C-FIELD SUPPLY A3
C-FIELD CURRENT
C-FIELD COIL
ZEEMAN FREQUENCY INPUT
ZEEMAN FREQUENCY FLOP COIL
+18 V
TO OTHER POWER SUPPLY CIRCUITS
P/O CESIUM OVEN A1
THERMISTOR RT2
+18 VDC
OVEN CONTROL A4
OVEN HEATER
THERMISTOR RT1
THERMAL SWITCH S1

4458-LH-042A

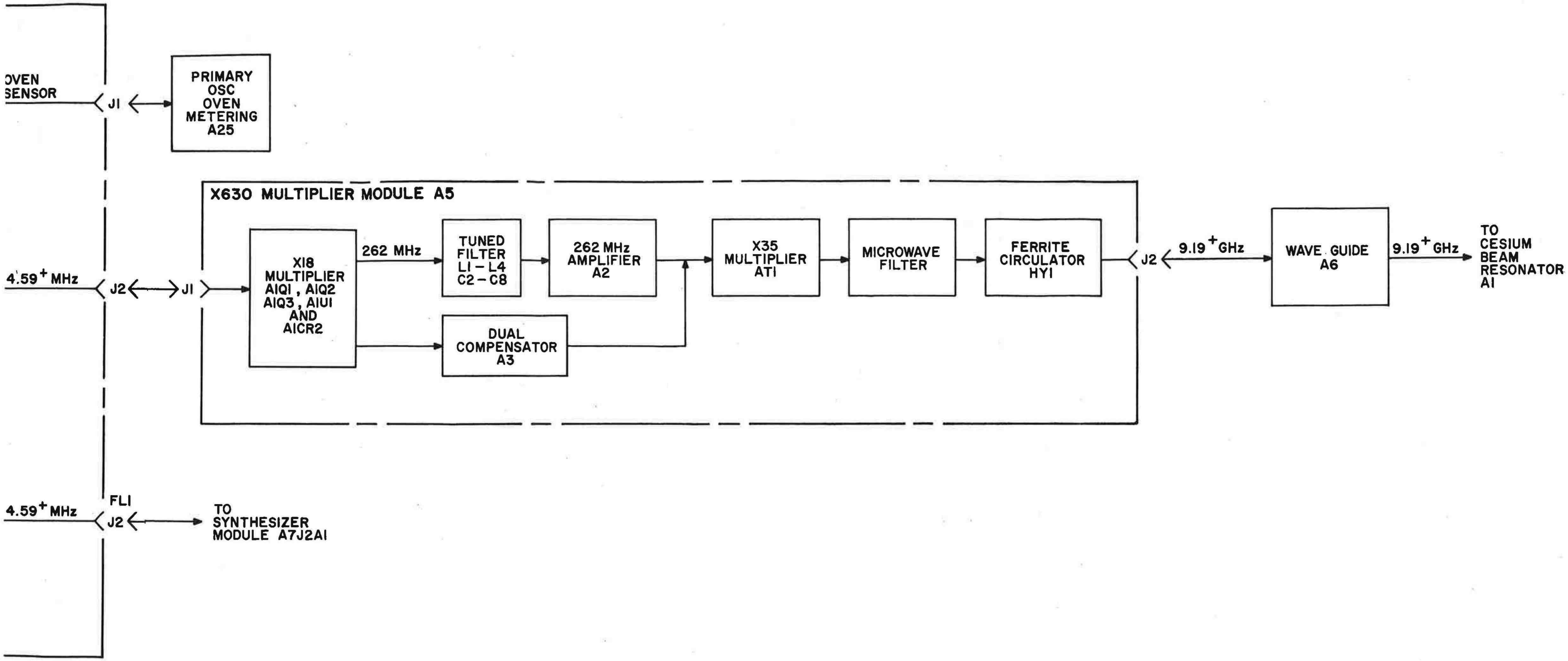

Figure 8-2. Primary Loop Subsystem, Functional Block Diagram (Sheet 2 of 2)

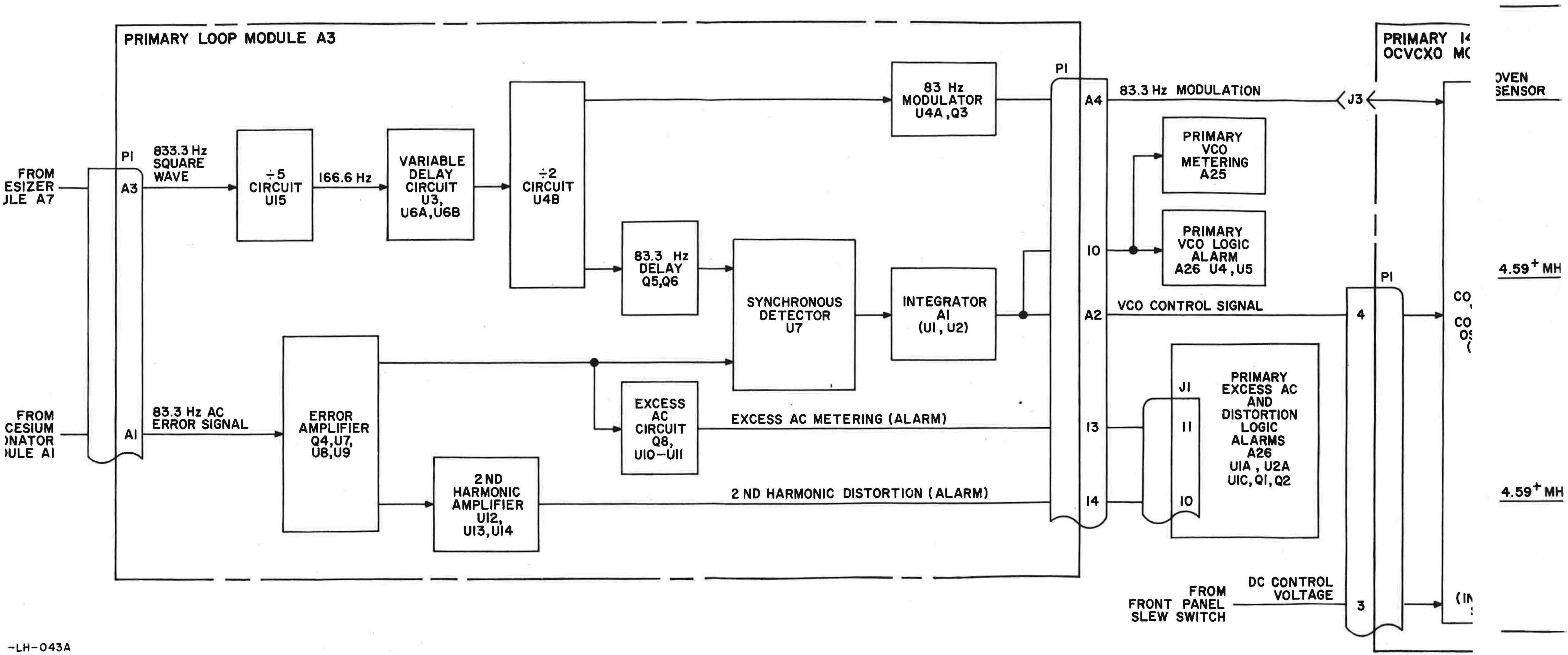

PRIMARY LOOP MODULE A3
FROM
ESIZER
JLE A7
FROM
CESIUM
)NATOR
)ULE AI
PI
A3
AI
833.3 Hz
SQUARE
WAVE
÷5
CIRCUIT
UI5
166.6 Hz
VARIABLE
DELAY
CIRCUIT
U3,
U6A,U6B
÷2
CIRCUIT
U4B
83 Hz
MODULATOR
U4A,Q3
83.3 Hz
DELAY
Q5,Q6
SYNCHRONOUS
DETECTOR
U7
INTEGRATOR
AI
(UI, U2)
83.3 Hz AC
ERROR SIGNAL
ERROR
AMPLIFIER
Q4,U7,
U8,U9
EXCESS
AC
CIRCUIT
Q8,
UIO–UII
2ND
HARMONIC
AMPLIFIER
UI2,
UI3,UI4
EXCESS AC METERING (ALARM)
2 ND HARMONIC DISTORTION (ALARM)
PI
A4
IO
A2
I3
I4
83.3 Hz MODULATION
J3
PRIMARY
VCO
METERING
A25
PRIMARY
VCO LOGIC
ALARM
A26 U4,U5
VCO CONTROL SIGNAL
JI
II
IO
PRIMARY
EXCESS AC
AND
DISTORTION
LOGIC
ALARMS
A26
UIA, U2A
UIC, QI, Q2
FROM
FRONT PANEL
SLEW SWITCH
DC CONTROL
VOLTAGE
PI
4
3
PRIMARY
OCVCXO
OVEN
SENSOR
4.59+ MH
4.59+ MH
-LH-043A

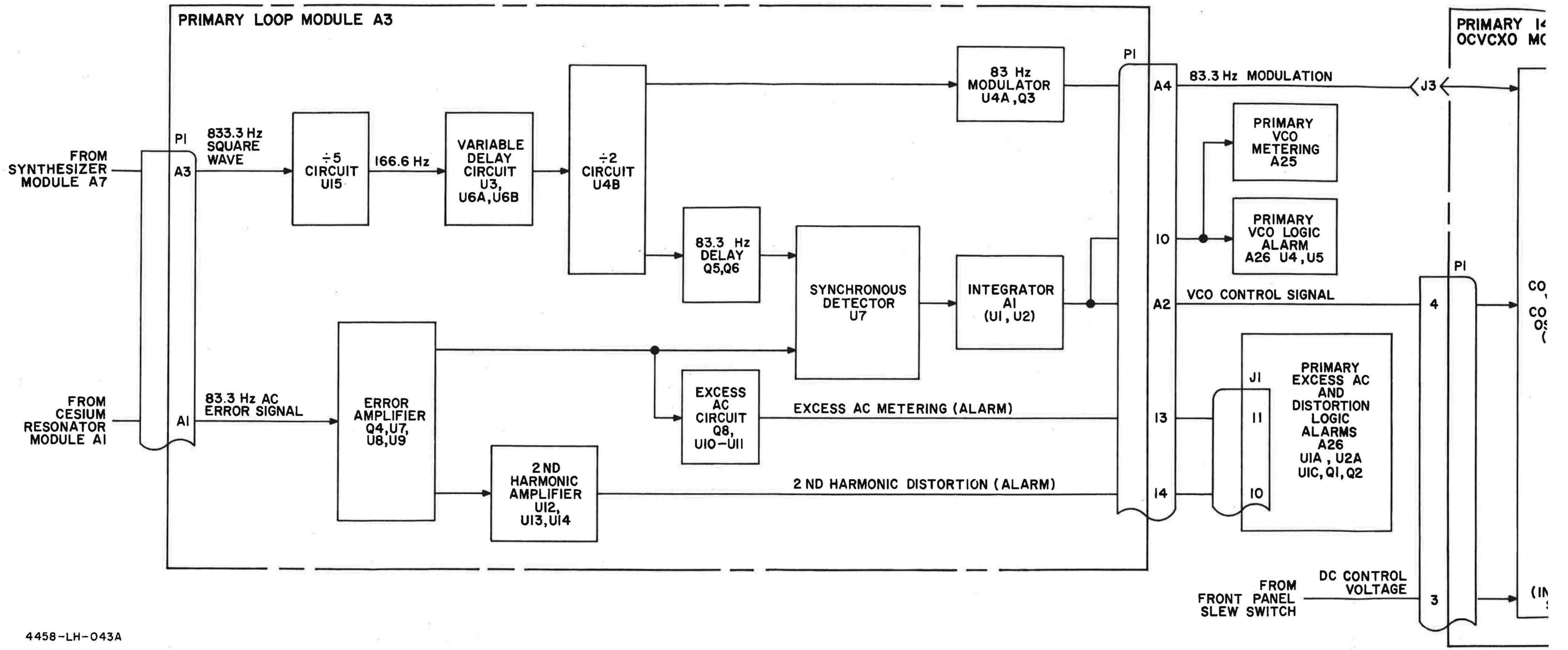
PRIMARY LOOP MODULE A3
FROM SYNTHESIZER MODULE A7
FROM CESIUM RESONATOR MODULE A1
P1
A3
A1
833.3 Hz SQUARE WAVE
÷5 CIRCUIT U15
166.6 Hz
VARIABLE DELAY CIRCUIT U3, U6A, U6B
÷2 CIRCUIT U4B
83 Hz MODULATOR U4A, Q3
83.3 Hz DELAY Q5, Q6
SYNCHRONOUS DETECTOR U7
INTEGRATOR A1 (U1, U2)
83.3 Hz AC ERROR SIGNAL
ERROR AMPLIFIER Q4, U7, U8, U9
EXCESS AC CIRCUIT Q8, U10-U11
2ND HARMONIC AMPLIFIER U12, U13, U14
EXCESS AC METERING (ALARM)
2 ND HARMONIC DISTORTION (ALARM)
A4
10
A2
13
14
83.3 Hz MODULATION
J3
PRIMARY VCO METERING A25
PRIMARY VCO LOGIC ALARM A26 U4, U5
VCO CONTROL SIGNAL
J1
11
10
PRIMARY EXCESS AC AND DISTORTION LOGIC ALARMS A26 U1A, U2A U1C, Q1, Q2
4
3
FROM FRONT PANEL SLEW SWITCH
DC CONTROL VOLTAGE
PRIMARY 1
OCVCXO M
4458-LH-043A

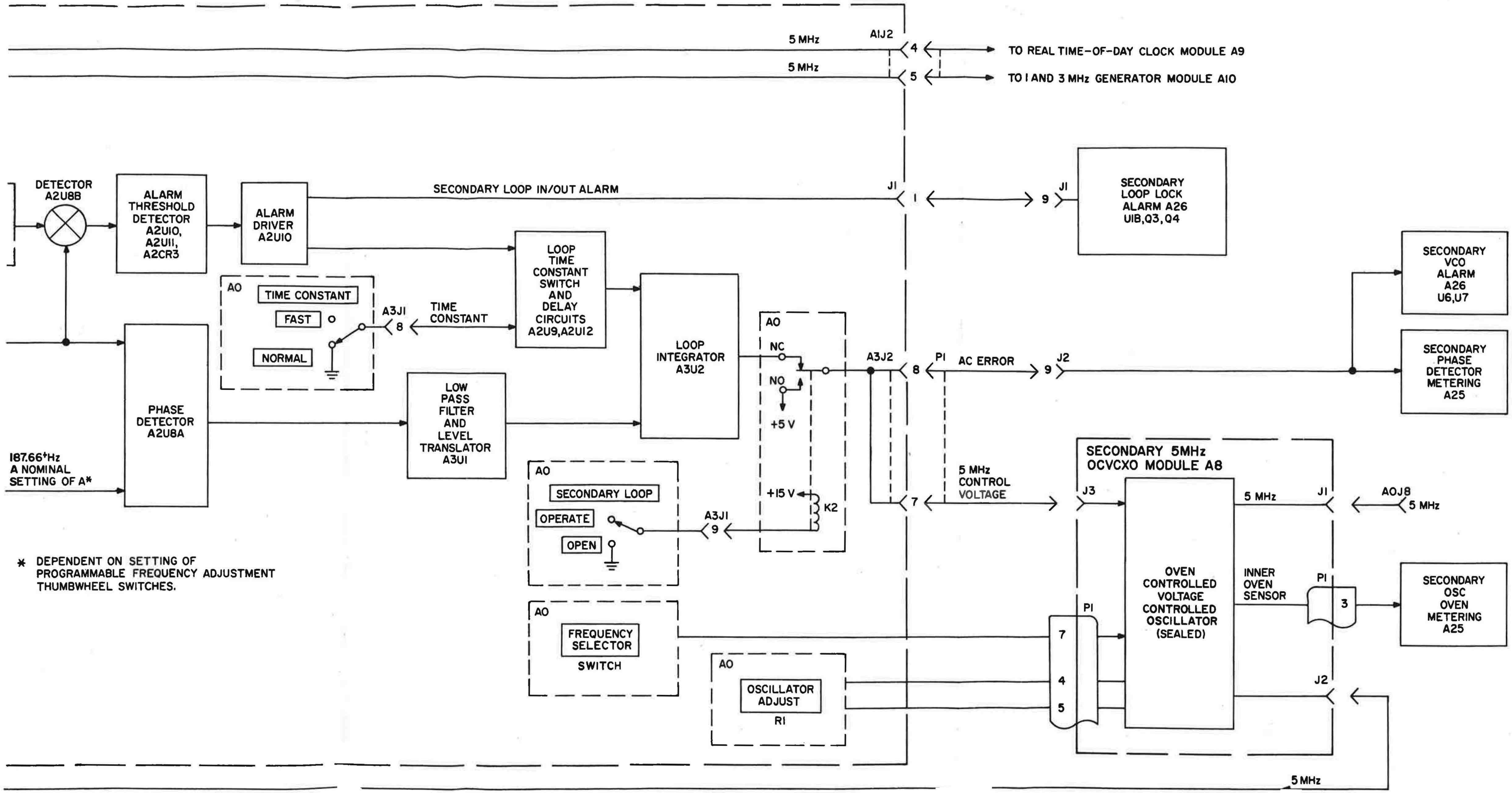

Figure 8-3. Secondary Loop Subsystem, Functional Block Diagram

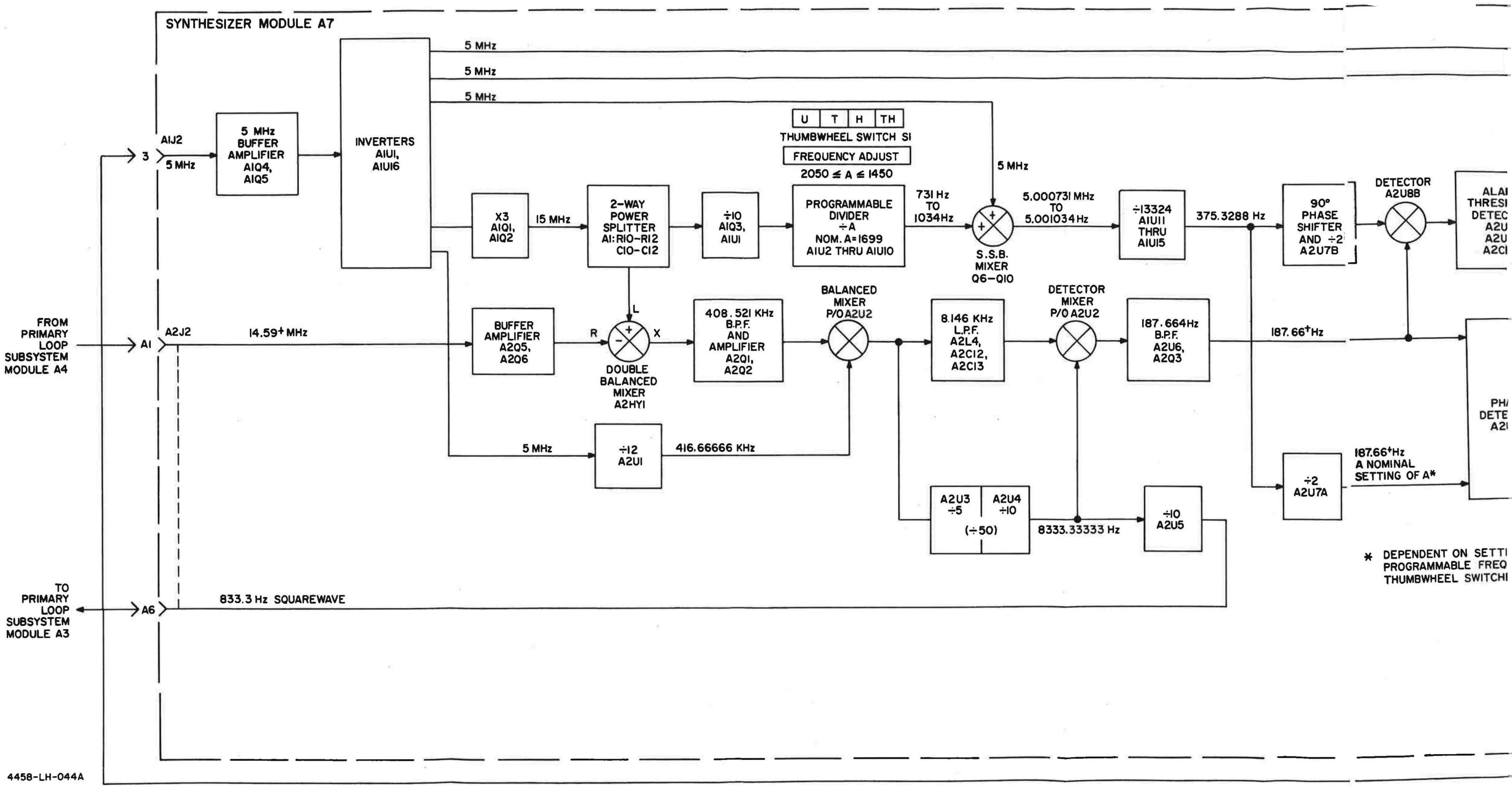
SYNTHESIZER MODULE A7
5 MHz
5 MHz
5 MHz
FROM PRIMARY LOOP SUBSYSTEM MODULE A4
TO PRIMARY LOOP SUBSYSTEM MODULE A3
3
A1J2
5 MHz
5 MHz BUFFER AMPLIFIER A1Q4, A1Q5
INVERTERS A1U1, A1U16
X3 A1Q1, A1Q2
15 MHz
2-WAY POWER SPLITTER A1:R10-R12 C10-C12
÷10 A1Q3, A1U1
U T H TH
THUMBWHEEL SWITCH S1
FREQUENCY ADJUST
2050 ≤ A ≤ 1450
PROGRAMMABLE DIVIDER ÷A NOM. A=1699 A1U2 THRU A1U10
731 Hz TO 1034Hz
5 MHz
S.S.B. MIXER Q6-Q10
5.000731 MHz TO 5.001034 Hz
÷13324 A1U11 THRU A1U15
375.3288 Hz
90° PHASE SHIFTER AND ÷2 A2U7B
DETECTOR A2U8B
ALA THRES DETEC A2U A2U A2C
A1
A2J2
14.59+ MHz
BUFFER AMPLIFIER A2Q5, A2Q6
R
L
X
DOUBLE BALANCED MIXER A2HY1
408.521 KHz B.P.F. AND AMPLIFIER A2Q1, A2Q2
BALANCED MIXER P/O A2U2
8.146 KHz L.P.F. A2L4, A2C12, A2C13
DETECTOR MIXER P/O A2U2
187.664Hz B.P.F. A2U6, A2Q3
187.66+Hz
PH DETE A2
5 MHz
÷12 A2U1
416.66666 KHz
A2U3 ÷5
A2U4 ÷10
(÷50)
8333.33333 Hz
÷10 A2U5
÷2 A2U7A
187.66+Hz A NOMINAL SETTING OF A*
* DEPENDENT ON SETTI PROGRAMMABLE FREQ THUMBWHEEL SWITCH
A6
833.3 Hz SQUAREWAVE
4458-LH-044A

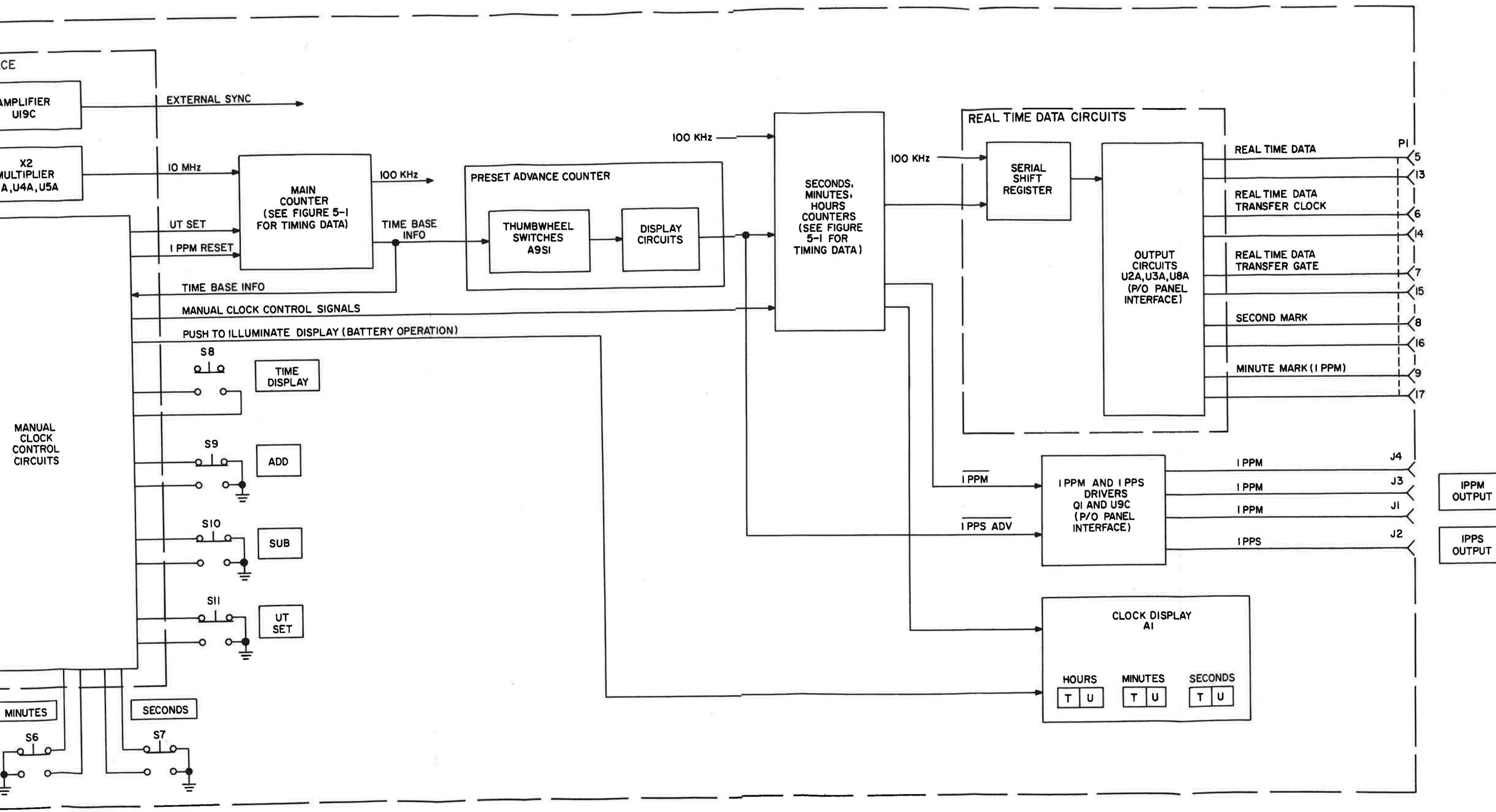

Figure 8-4. Output Subsystem, Real Time-of-Day Clock, Functional Block Diagram

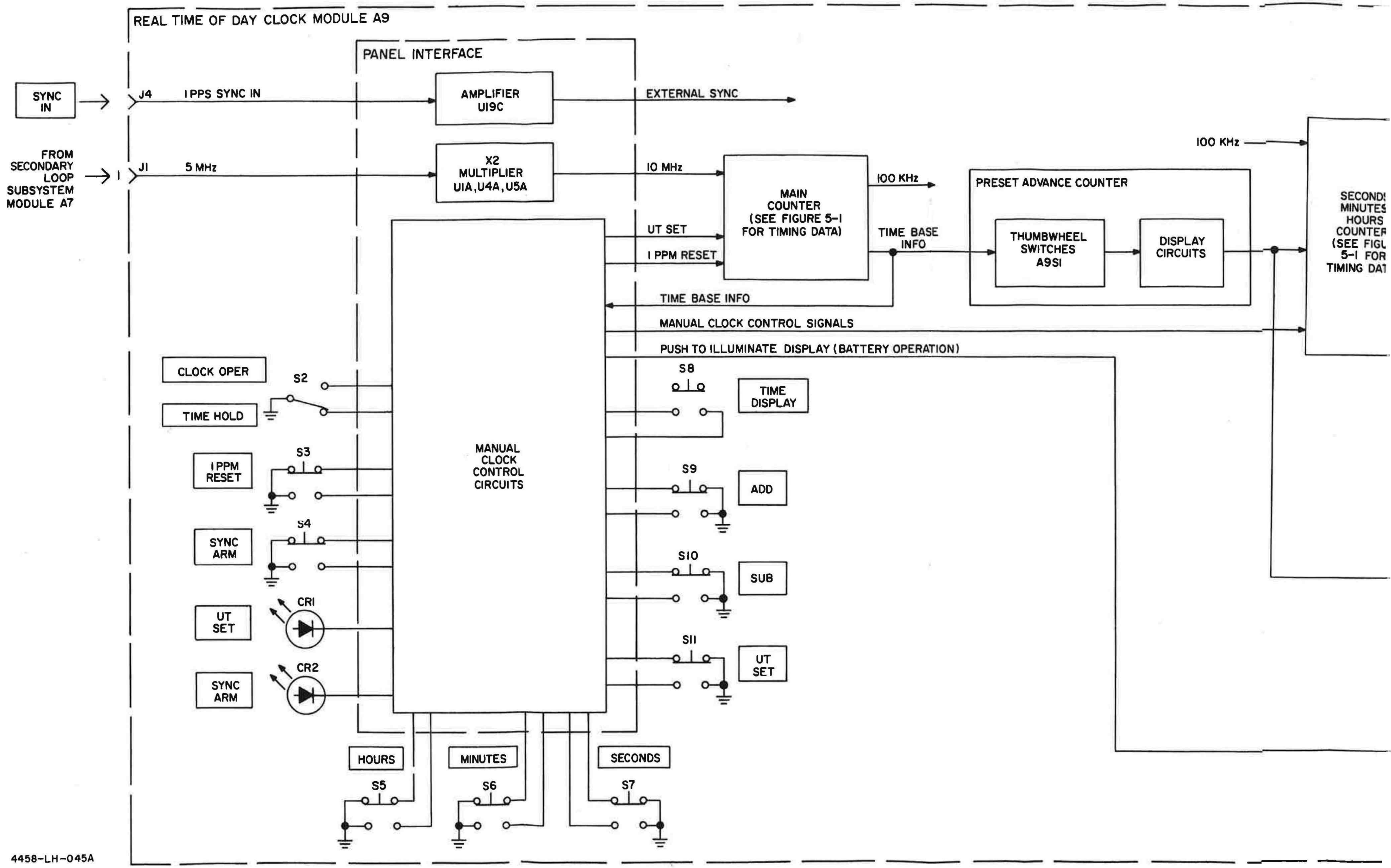
REAL TIME OF DAY CLOCK MODULE A9
PANEL INTERFACE
SYNC IN
J4
I PPS SYNC IN
AMPLIFIER U19C
EXTERNAL SYNC
FROM SECONDARY LOOP SUBSYSTEM MODULE A7
J1
5 MHz
X2 MULTIPLIER U1A, U4A, U5A
10 MHz
MAIN COUNTER (SEE FIGURE 5-1 FOR TIMING DATA)
100 KHz
100 KHz
PRESET ADVANCE COUNTER
THUMBWHEEL SWITCHES A9S1
DISPLAY CIRCUITS
UT SET
I PPM RESET
TIME BASE INFO
TIME BASE INFO
MANUAL CLOCK CONTROL SIGNALS
PUSH TO ILLUMINATE DISPLAY (BATTERY OPERATION)
MANUAL CLOCK CONTROL CIRCUITS
CLOCK OPER
TIME HOLD
S2
S3
I PPM RESET
S4
SYNC ARM
CR1
UT SET
CR2
SYNC ARM
S8
TIME DISPLAY
S9
ADD
S10
SUB
S11
UT SET
HOURS
MINUTES
SECONDS
S5
S6
S7
4458-LH-045A

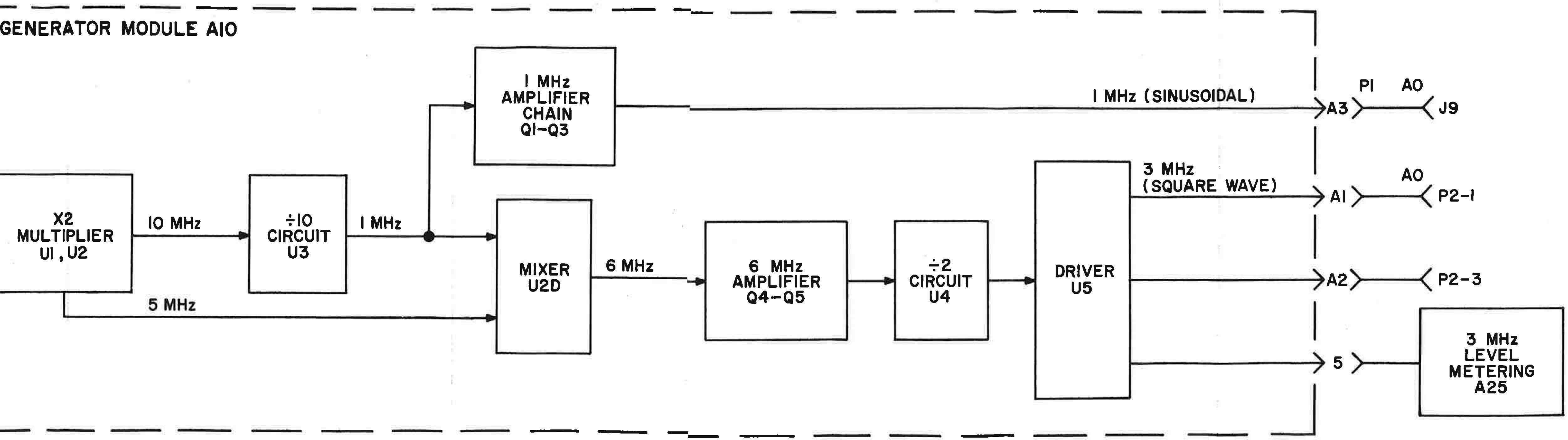

Figure 8-5. Output Subsystem, 1 MHz, 3 MHz Generator, Functional Block Diagram

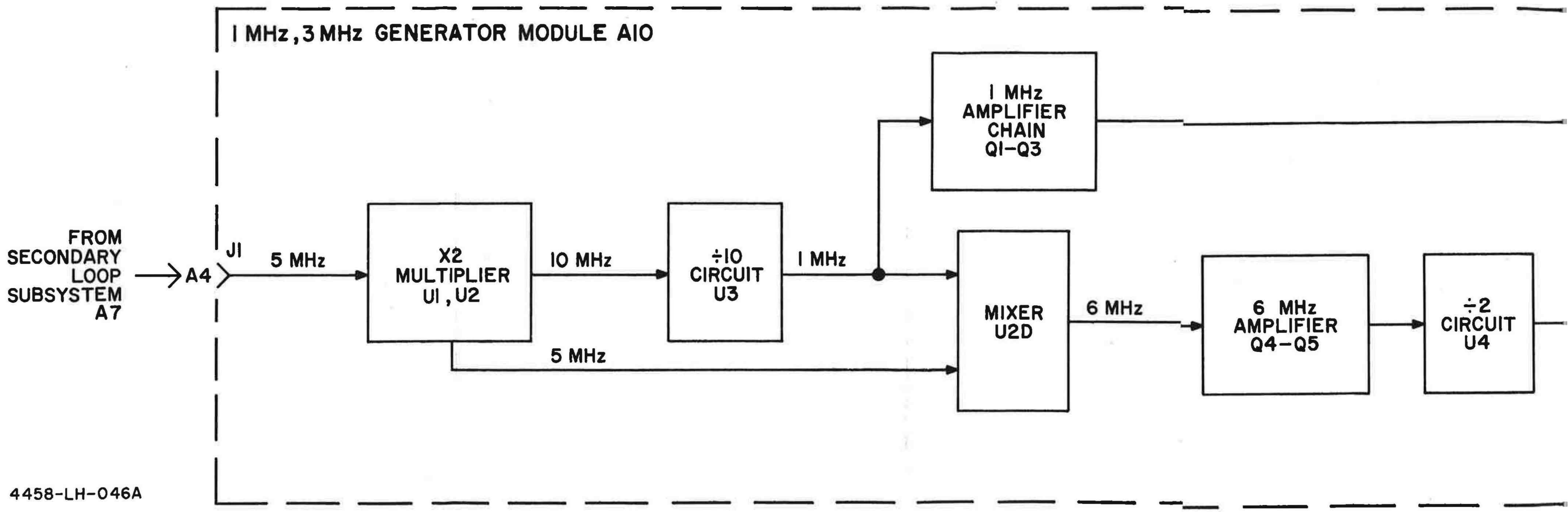

I MHz, 3 MHz GENERATOR MODULE AIO
FROM SECONDARY LOOP SUBSYSTEM A7
A4
JI
5 MHz
X2 MULTIPLIER UI, U2
10 MHz
÷10 CIRCUIT U3
I MHz
I MHz AMPLIFIER CHAIN QI-Q3
MIXER U2D
5 MHz
6 MHz
6 MHz AMPLIFIER Q4-Q5
÷2 CIRCUIT U4

4458-LH-046A

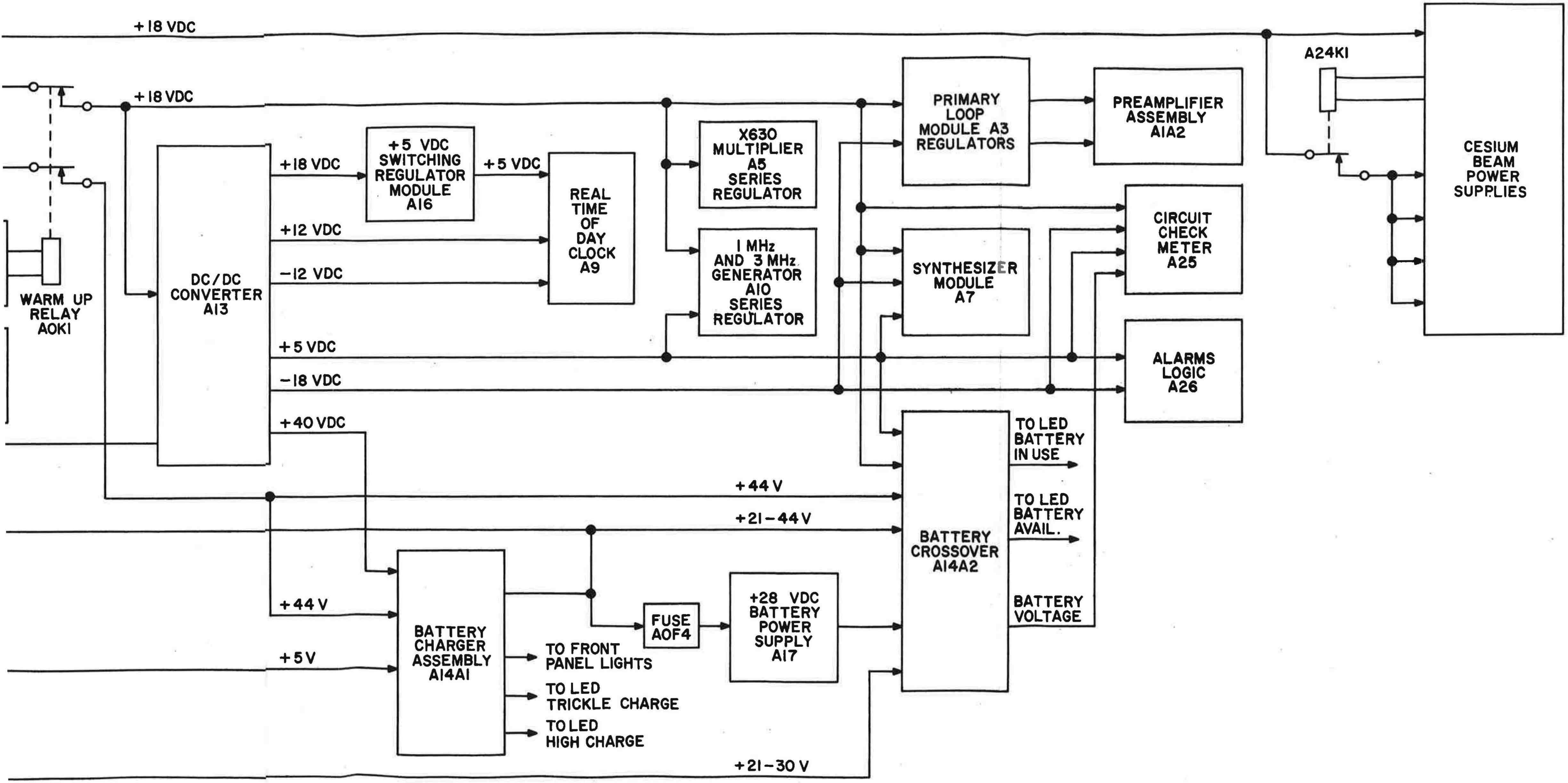

Figure 8-6. Low Voltage Power Supply Subsystem, Simplified Block Diagram

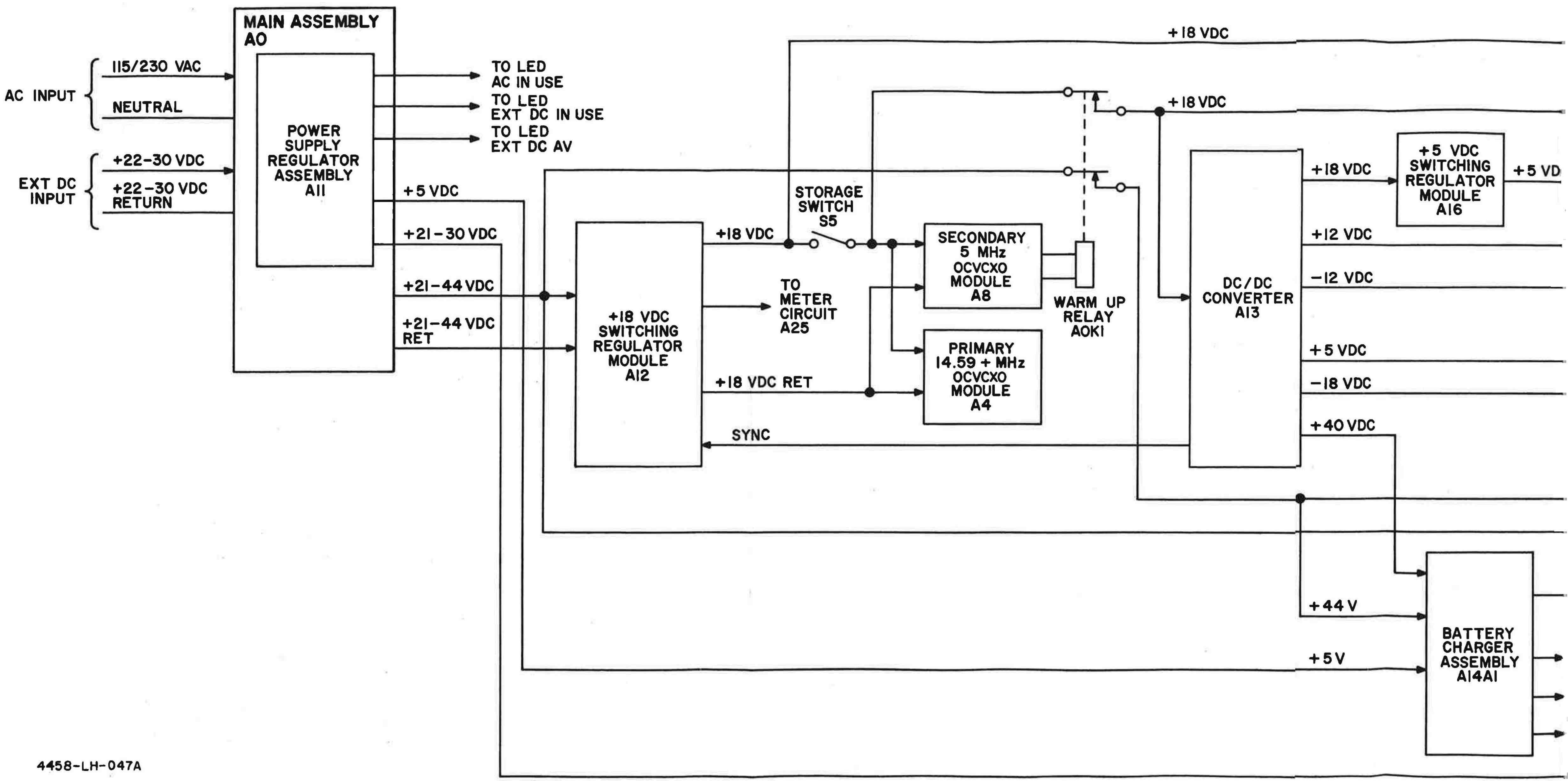
MAIN ASSEMBLY AO
AC INPUT
115/230 VAC
NEUTRAL
EXT DC INPUT
+22-30 VDC
+22-30 VDC RETURN
POWER SUPPLY REGULATOR ASSEMBLY A11
TO LED AC IN USE
TO LED EXT DC IN USE
TO LED EXT DC AV
+5 VDC
+21-30 VDC
+21-44 VDC
+21-44 VDC RET
+18 VDC SWITCHING REGULATOR MODULE A12
+18 VDC
TO METER CIRCUIT A25
+18 VDC RET
SYNC
STORAGE SWITCH S5
SECONDARY 5 MHz OCVCXO MODULE A8
PRIMARY 14.59 + MHz OCVCXO MODULE A4
WARM UP RELAY AOK1
+18 VDC
+18 VDC
DC/DC CONVERTER A13
+18 VDC
+12 VDC
-12 VDC
+5 VDC
-18 VDC
+40 VDC
+5 VDC SWITCHING REGULATOR MODULE A16
+5 VD
+44 V
+5 V
BATTERY CHARGER ASSEMBLY A14A1
4458-LH-047A

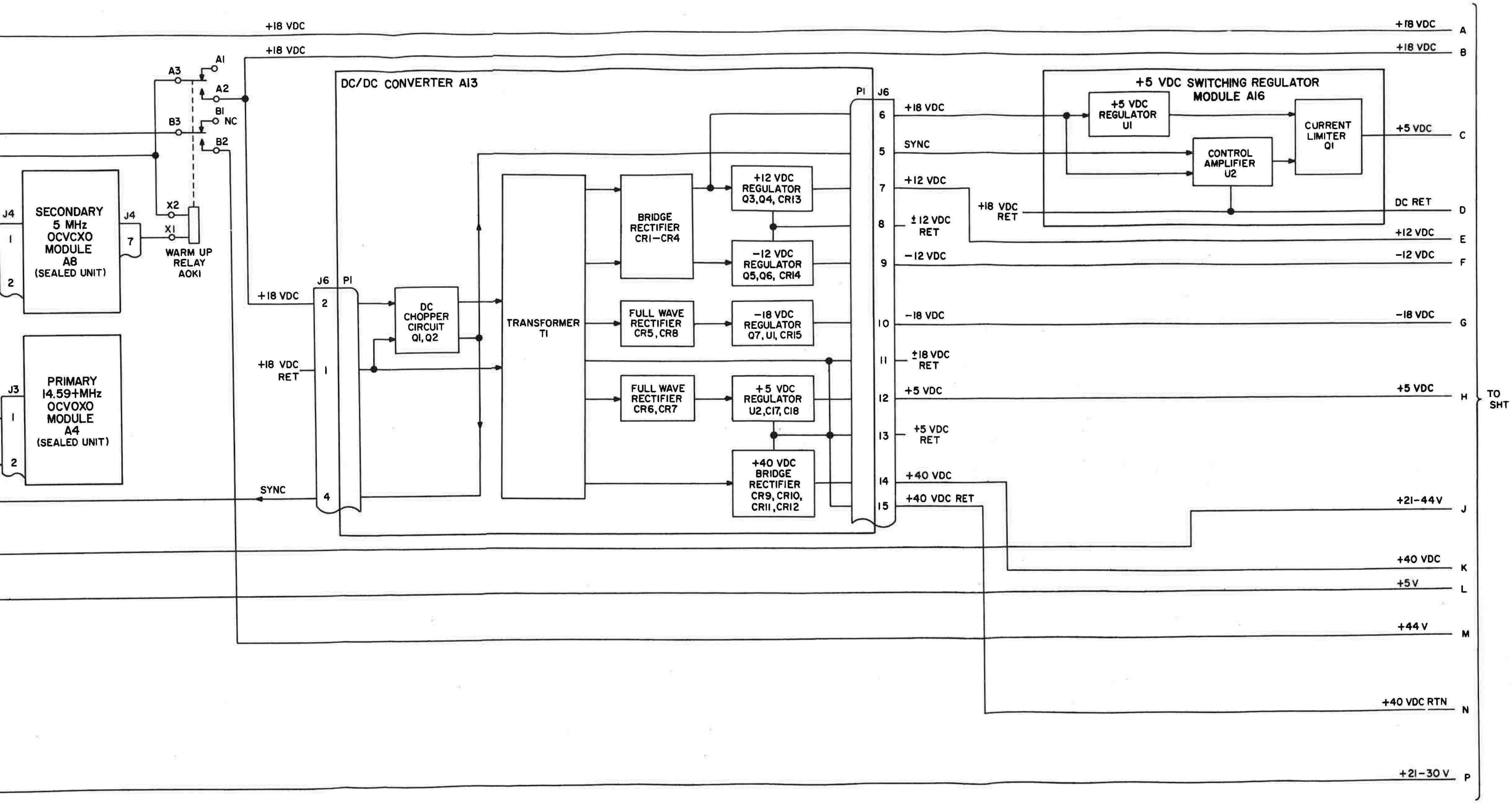

Figure 8-7. Low Voltage Power Supply Subsystem, Functional Block Diagram (Sheet 1 of 2)

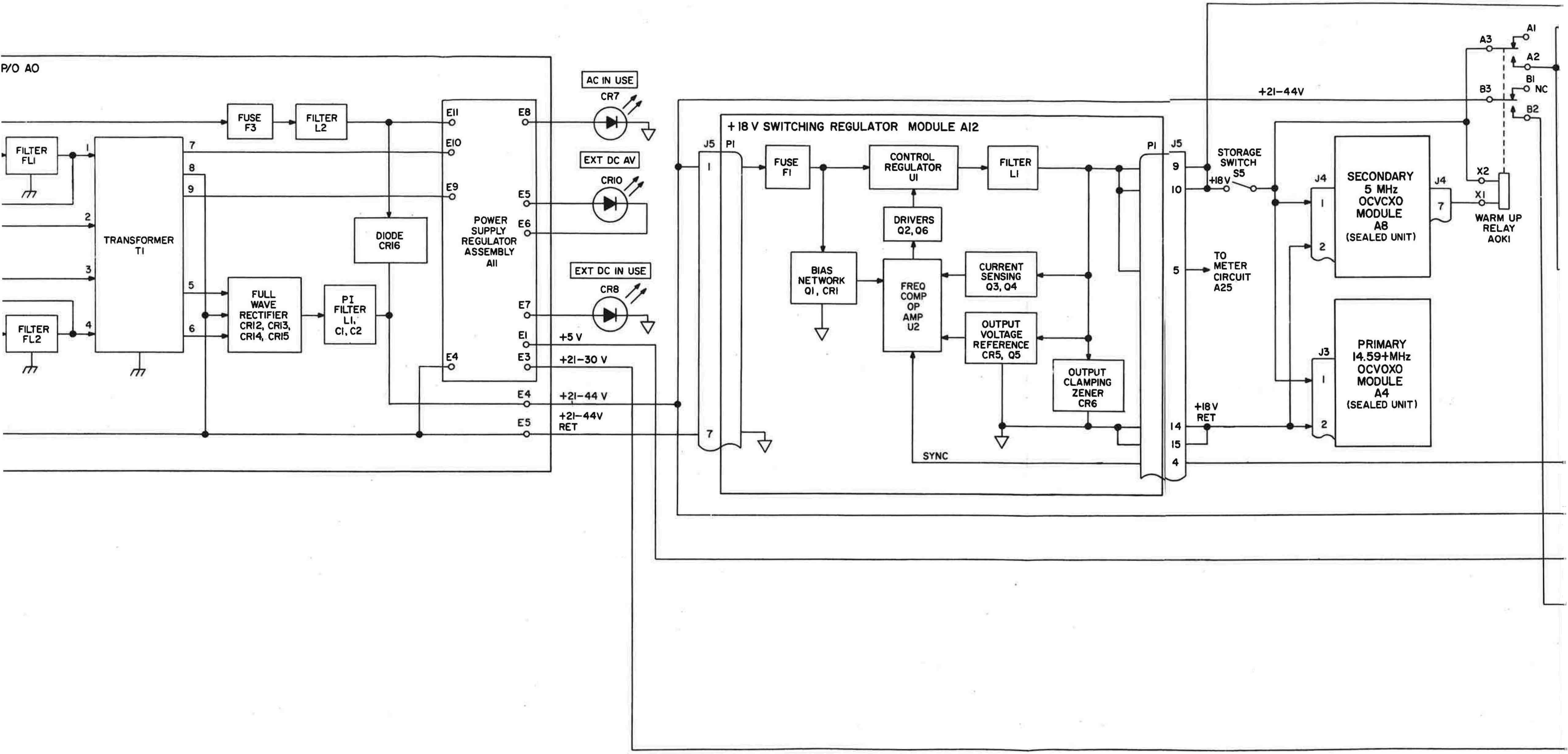

P/O A0
FUSE F3
FILTER L2
FILTER FL1
FILTER FL2
TRANSFORMER T1
DIODE CR16
FULL WAVE RECTIFIER CR12, CR13, CR14, CR15
PI FILTER L1, C1, C2
POWER SUPPLY REGULATOR ASSEMBLY A11
AC IN USE
CR7
EXT DC AV
CR10
EXT DC IN USE
CR8
+5 V
+21-30 V
+21-44 V
+21-44V RET
+18 V SWITCHING REGULATOR MODULE A12
FUSE F1
CONTROL REGULATOR U1
FILTER L1
DRIVERS Q2, Q6
BIAS NETWORK Q1, CR1
FREQ COMP OP AMP U2
CURRENT SENSING Q3, Q4
OUTPUT VOLTAGE REFERENCE CR5, Q5
OUTPUT CLAMPING ZENER CR6
SYNC
+21-44V
STORAGE SWITCH S5
+18 V
TO METER CIRCUIT A25
+18 V RET
SECONDARY 5 MHz OCVCXO MODULE A8 (SEALED UNIT)
PRIMARY 14.59+MHz OCVOXO MODULE A4 (SEALED UNIT)
WARM UP RELAY A0K1

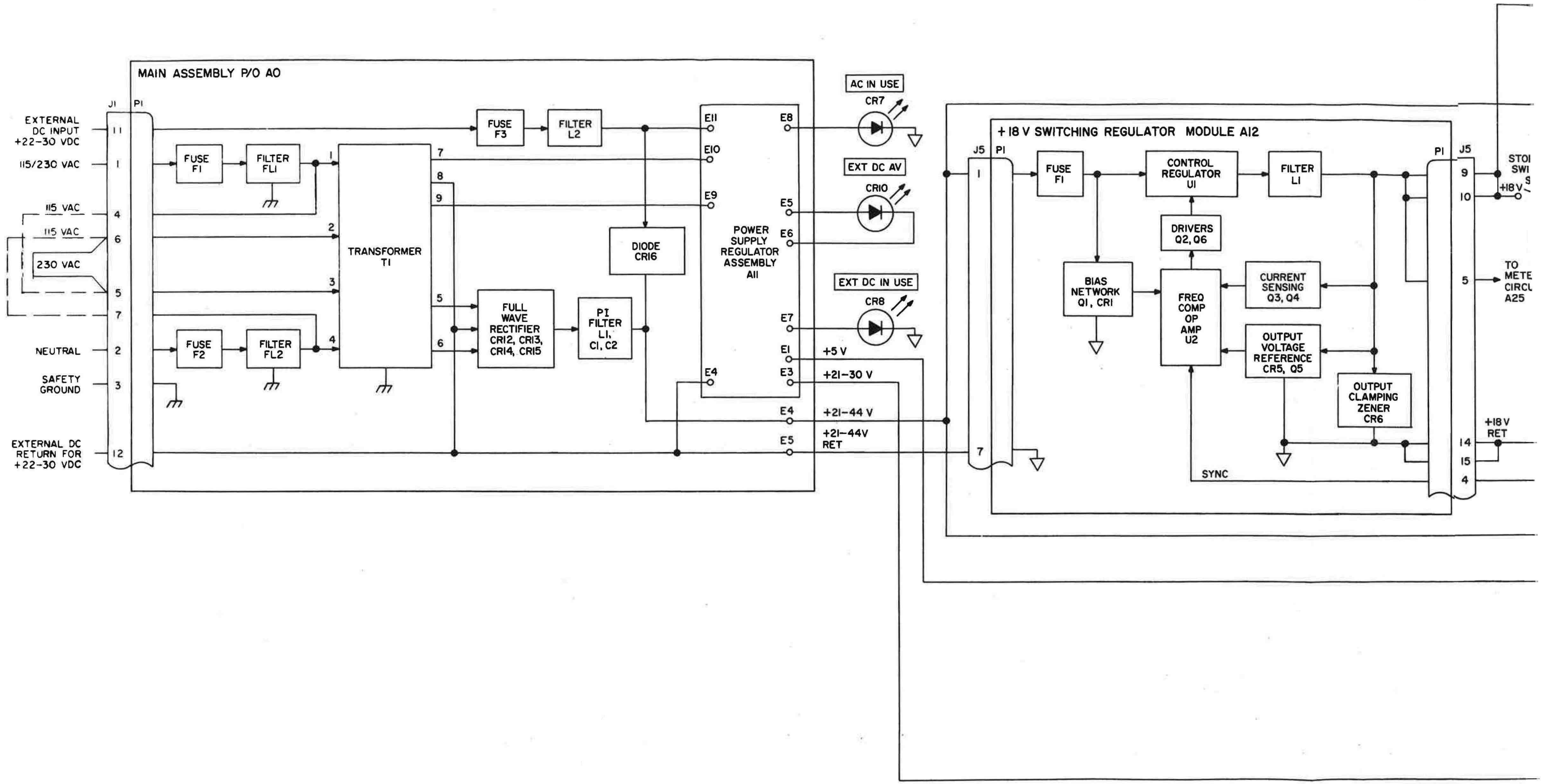

MAIN ASSEMBLY P/O A0
J1
P1
EXTERNAL DC INPUT +22-30 VDC
115/230 VAC
115 VAC
115 VAC
230 VAC
NEUTRAL
SAFETY GROUND
EXTERNAL DC RETURN FOR +22-30 VDC
FUSE F1
FILTER FL1
FUSE F2
FILTER FL2
FUSE F3
FILTER L2
TRANSFORMER T1
FULL WAVE RECTIFIER CR12, CR13, CR14, CR15
PI FILTER L1, C1, C2
DIODE CR16
POWER SUPPLY REGULATOR ASSEMBLY A11
AC IN USE
CR7
EXT DC AV
CR10
EXT DC IN USE
CR8
+5 V
+21-30 V
+21-44 V
+21-44V RET
+18 V SWITCHING REGULATOR MODULE A12
J5
P1
FUSE F1
CONTROL REGULATOR U1
FILTER L1
DRIVERS Q2, Q6
BIAS NETWORK Q1, CR1
FREQ COMP OP AMP U2
CURRENT SENSING Q3, Q4
OUTPUT VOLTAGE REFERENCE CR5, Q5
OUTPUT CLAMPING ZENER CR6
SYNC
+18 V RET
+18V
TO METE CIRCU A25
STO SWI

4458-LH-048A

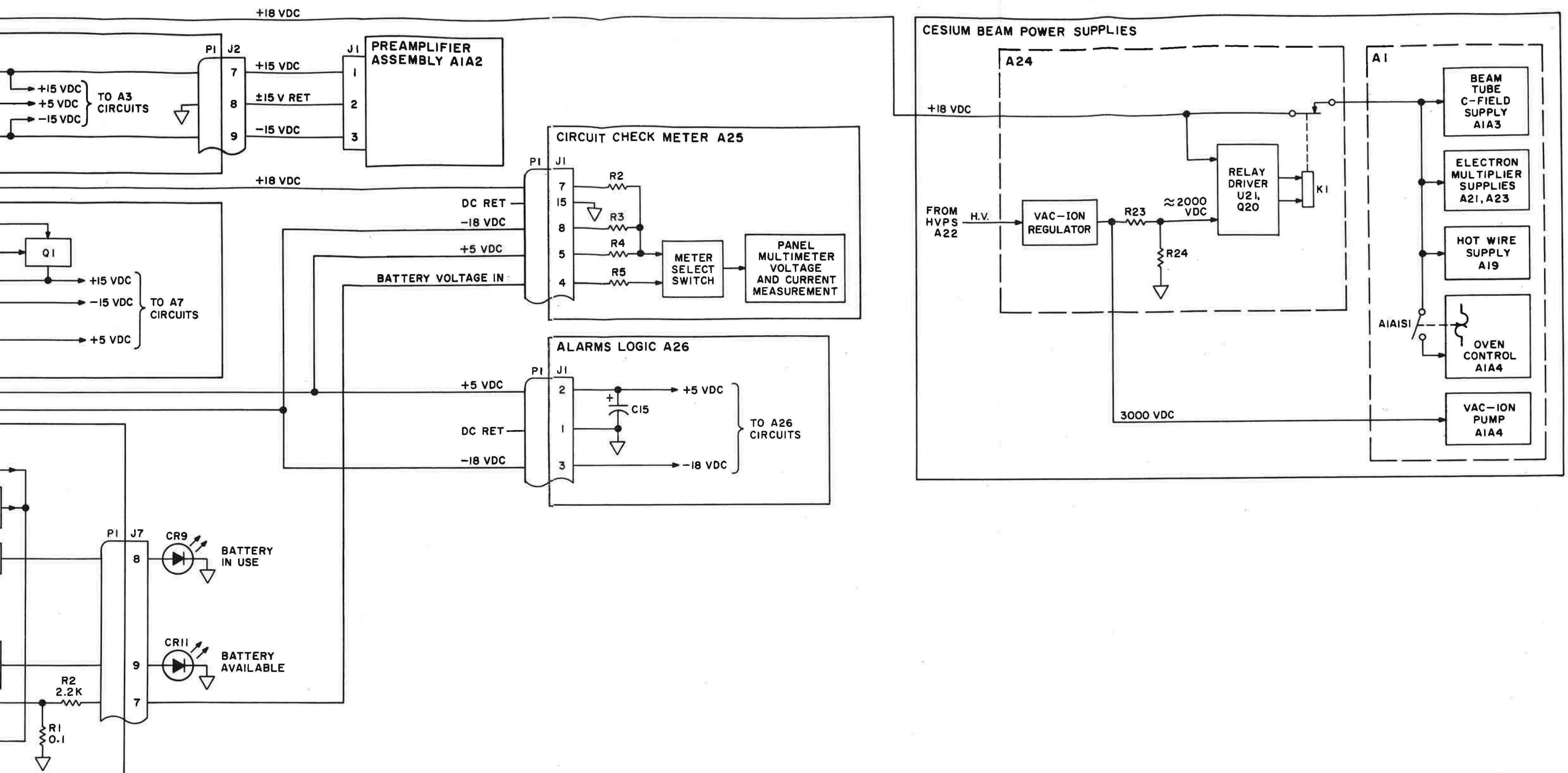

Figure 8-7. Low Voltage Power Supply Subsystem, Functional Block Diagram (Sheet 2 of 2)

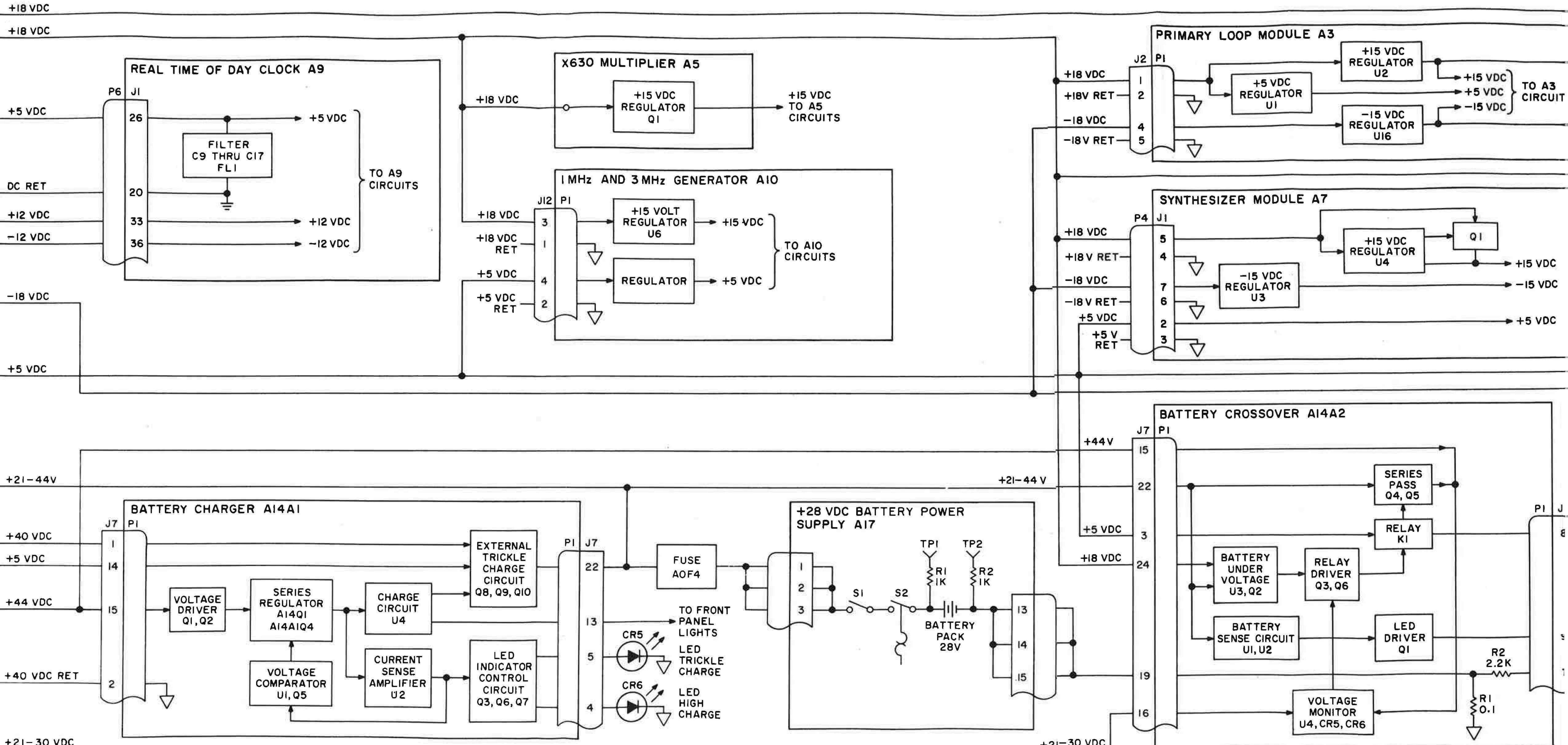
+18 VDC
+18 VDC
REAL TIME OF DAY CLOCK A9
P6 J1
+5 VDC
26
+5 VDC
FILTER
C9 THRU C17
FL1
DC RET
20
TO A9
CIRCUITS
+12 VDC
33
+12 VDC
-12 VDC
36
-12 VDC
-18 VDC
+5 VDC
X630 MULTIPLIER A5
+18 VDC
+15 VDC
REGULATOR
Q1
+15 VDC
TO A5
CIRCUITS
1 MHz AND 3 MHz GENERATOR A10
J12 P1
+18 VDC
3
+18 VDC
RET
1
+5 VDC
4
+5 VDC
RET
2
+15 VOLT
REGULATOR
U6
+15 VDC
REGULATOR
+5 VDC
TO A10
CIRCUITS
PRIMARY LOOP MODULE A3
J2 P1
+18 VDC
1
+18V RET
2
-18 VDC
4
-18V RET
5
+15 VDC
REGULATOR
U2
+5 VDC
REGULATOR
U1
-15 VDC
REGULATOR
U16
+15 VDC
+5 VDC
-15 VDC
TO A3
CIRCUIT
SYNTHESIZER MODULE A7
P4 J1
+18 VDC
5
+18 V RET
4
-18 VDC
7
-18 V RET
6
+5 VDC
2
+5 V
RET
3
+15 VDC
REGULATOR
U4
Q1
-15 VDC
REGULATOR
U3
+15 VDC
-15 VDC
+5 VDC
BATTERY CROSSOVER A14A2
J7 P1
+44V
15
+21-44V
+21-44 V
22
+5 VDC
3
+18 VDC
24
19
16
+21-30 VDC
SERIES
PASS
Q4, Q5
RELAY
K1
BATTERY
UNDER
VOLTAGE
U3, Q2
RELAY
DRIVER
Q3, Q6
BATTERY
SENSE CIRCUIT
U1, U2
LED
DRIVER
Q1
VOLTAGE
MONITOR
U4, CR5, CR6
R2
2.2K
R1
0.1
P1 J
8
BATTERY CHARGER A14A1
J7 P1
+40 VDC
1
+5 VDC
14
+44 VDC
15
+40 VDC RET
2
VOLTAGE
DRIVER
Q1, Q2
SERIES
REGULATOR
A14Q1
A14A1Q4
VOLTAGE
COMPARATOR
U1, Q5
CHARGE
CIRCUIT
U4
CURRENT
SENSE
AMPLIFIER
U2
EXTERNAL
TRICKLE
CHARGE
CIRCUIT
Q8, Q9, Q10
LED
INDICATOR
CONTROL
CIRCUIT
Q3, Q6, Q7
P1 J7
22
13
5
4
FUSE
A0F4
TO FRONT
PANEL
LIGHTS
CR5
LED
TRICKLE
CHARGE
CR6
LED
HIGH
CHARGE
+28 VDC BATTERY POWER
SUPPLY A17
1
2
3
S1
S2
TP1
R1
1K
TP2
R2
1K
BATTERY
PACK
28V
13
14
15
+21-30 VDC
4458-LH-049A

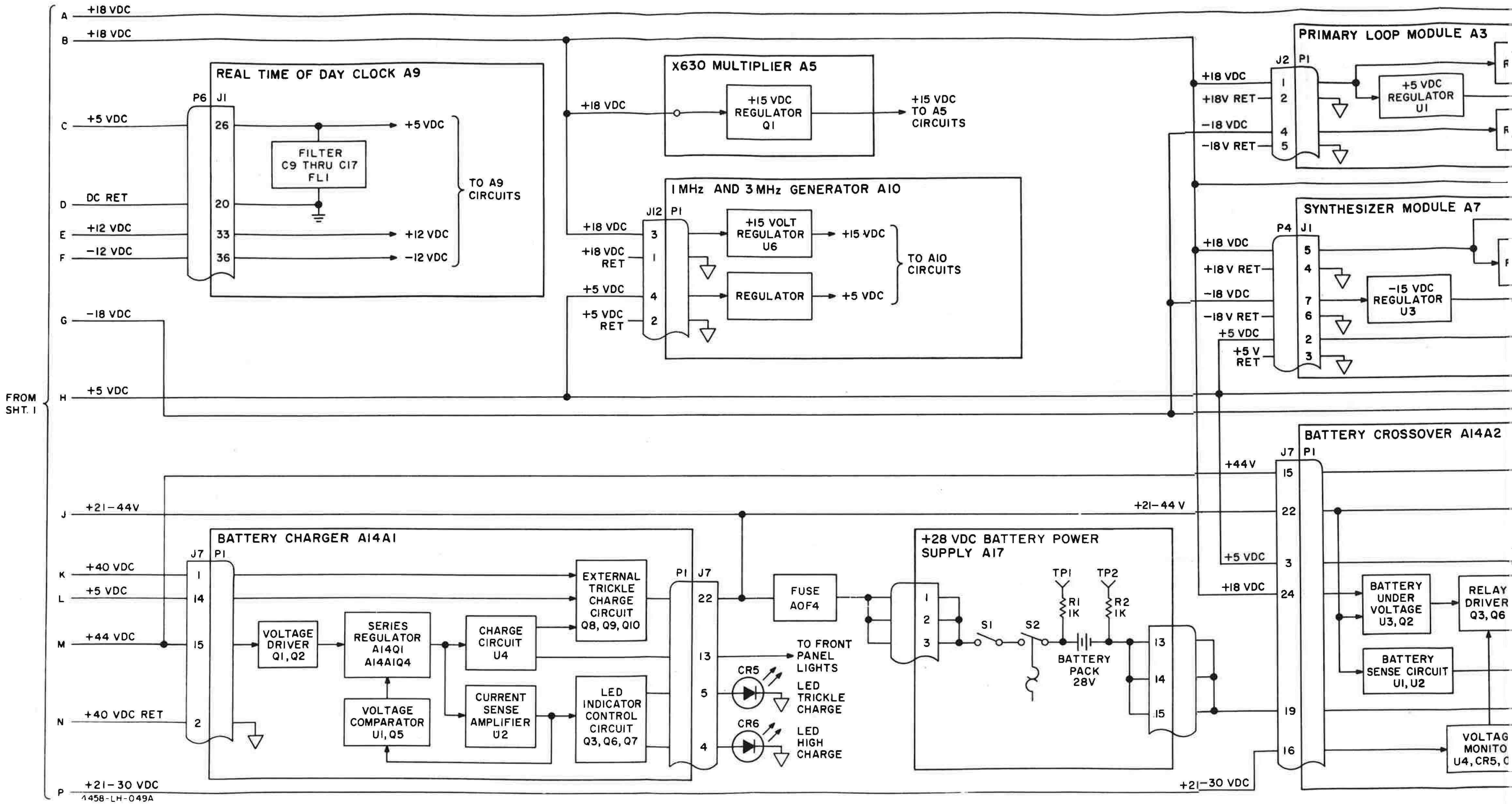

FROM SHT. 1
A +18 VDC
B +18 VDC
C +5 VDC
D DC RET
E +12 VDC
F −12 VDC
G −18 VDC
H +5 VDC
J +21−44V
K +40 VDC
L +5 VDC
M +44 VDC
N +40 VDC RET
P +21−30 VDC
REAL TIME OF DAY CLOCK A9
P6 J1
FILTER C9 THRU C17 FL1
+5 VDC
+12 VDC
−12 VDC
TO A9 CIRCUITS
X630 MULTIPLIER A5
+18 VDC
+15 VDC REGULATOR Q1
+15 VDC TO A5 CIRCUITS
1 MHz AND 3 MHz GENERATOR A10
J12 P1
+18 VDC RET
+5 VDC RET
+15 VOLT REGULATOR U6
REGULATOR
+15 VDC
+5 VDC
TO A10 CIRCUITS
PRIMARY LOOP MODULE A3
J2 P1
+18V RET
−18 VDC
−18V RET
+5 VDC REGULATOR U1
SYNTHESIZER MODULE A7
P4 J1
+18 V RET
−18 V RET
+5 V RET
−15 VDC REGULATOR U3
BATTERY CROSSOVER A14A2
J7 P1
+44V
+21−44 V
+18 VDC
BATTERY UNDER VOLTAGE U3, Q2
RELAY DRIVER Q3, Q6
BATTERY SENSE CIRCUIT U1, U2
VOLTAG MONITO U4, CR5, C
BATTERY CHARGER A14A1
VOLTAGE DRIVER Q1, Q2
SERIES REGULATOR A14Q1 A14A1Q4
CHARGE CIRCUIT U4
EXTERNAL TRICKLE CHARGE CIRCUIT Q8, Q9, Q10
VOLTAGE COMPARATOR U1, Q5
CURRENT SENSE AMPLIFIER U2
LED INDICATOR CONTROL CIRCUIT Q3, Q6, Q7
P1 J7
FUSE A0F4
TO FRONT PANEL LIGHTS
CR5
LED TRICKLE CHARGE
CR6
LED HIGH CHARGE
+28 VDC BATTERY POWER SUPPLY A17
TP1 TP2
R1 1K
R2 1K
S1 S2
BATTERY PACK 28V
+21−30 VDC
4458-LH-049A

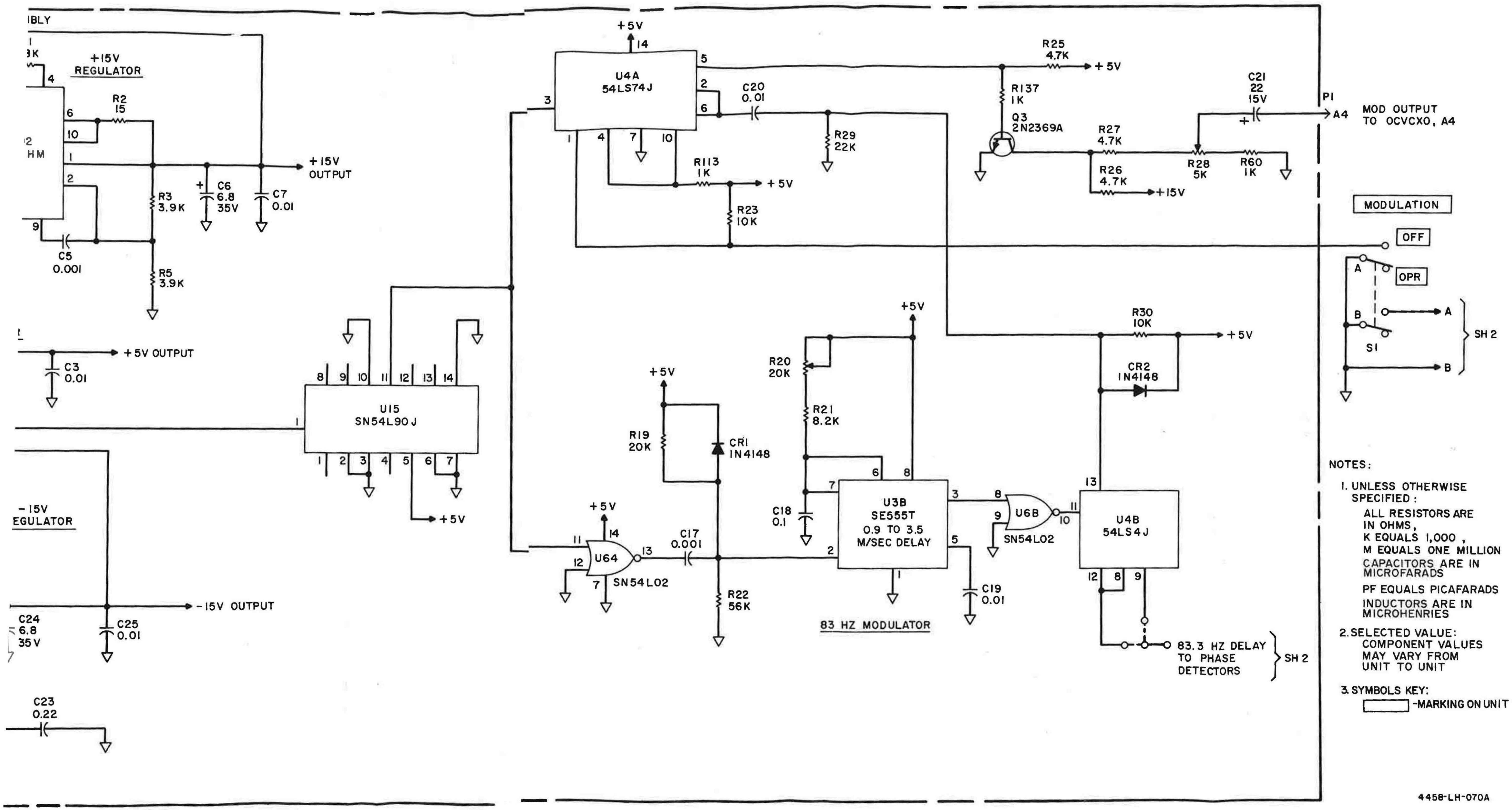

Figure 8-8. Primary Loop A3, Schematic Diagram (Sheet 1 of 2)

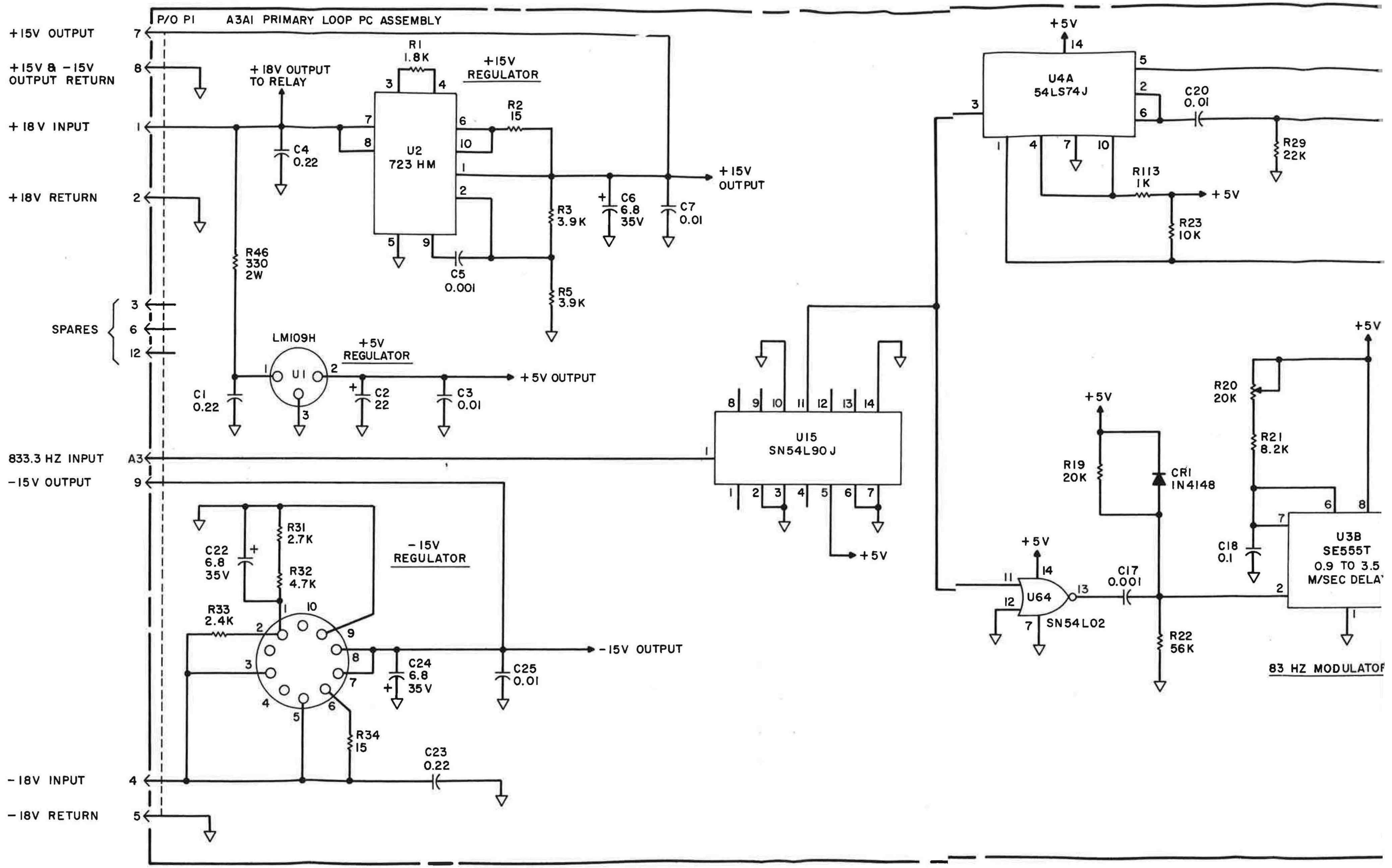

P/O P1
A3A1 PRIMARY LOOP PC ASSEMBLY
+15V OUTPUT
+15V & -15V OUTPUT RETURN
+18V INPUT
+18V RETURN
SPARES
833.3 HZ INPUT
-15V OUTPUT
-18V INPUT
-18V RETURN
+18V OUTPUT TO RELAY
R1 1.8K
+15V REGULATOR
R2 15
U2 723 HM
C4 0.22
+15V OUTPUT
R3 3.9K
C6 6.8 35V
C7 0.01
C5 0.001
R5 3.9K
R46 330 2W
LM109H
+5V REGULATOR
U1
C1 0.22
C2 22
C3 0.01
+5V OUTPUT
R31 2.7K
C22 6.8 35V
R32 4.7K
-15V REGULATOR
R33 2.4K
C24 6.8 35V
C25 0.01
-15V OUTPUT
R34 15
C23 0.22
U15 SN54L90J
+5V
U4A 54LS74J
C20 0.01
R29 22K
R113 1K
R23 10K
R20 20K
R21 8.2K
R19 20K
CR1 IN4148
C18 0.1
U3B SE555T 0.9 TO 3.5 M/SEC DELA
U64 SN54L02
C17 0.001
R22 56K
83 HZ MODULATOR

Fig

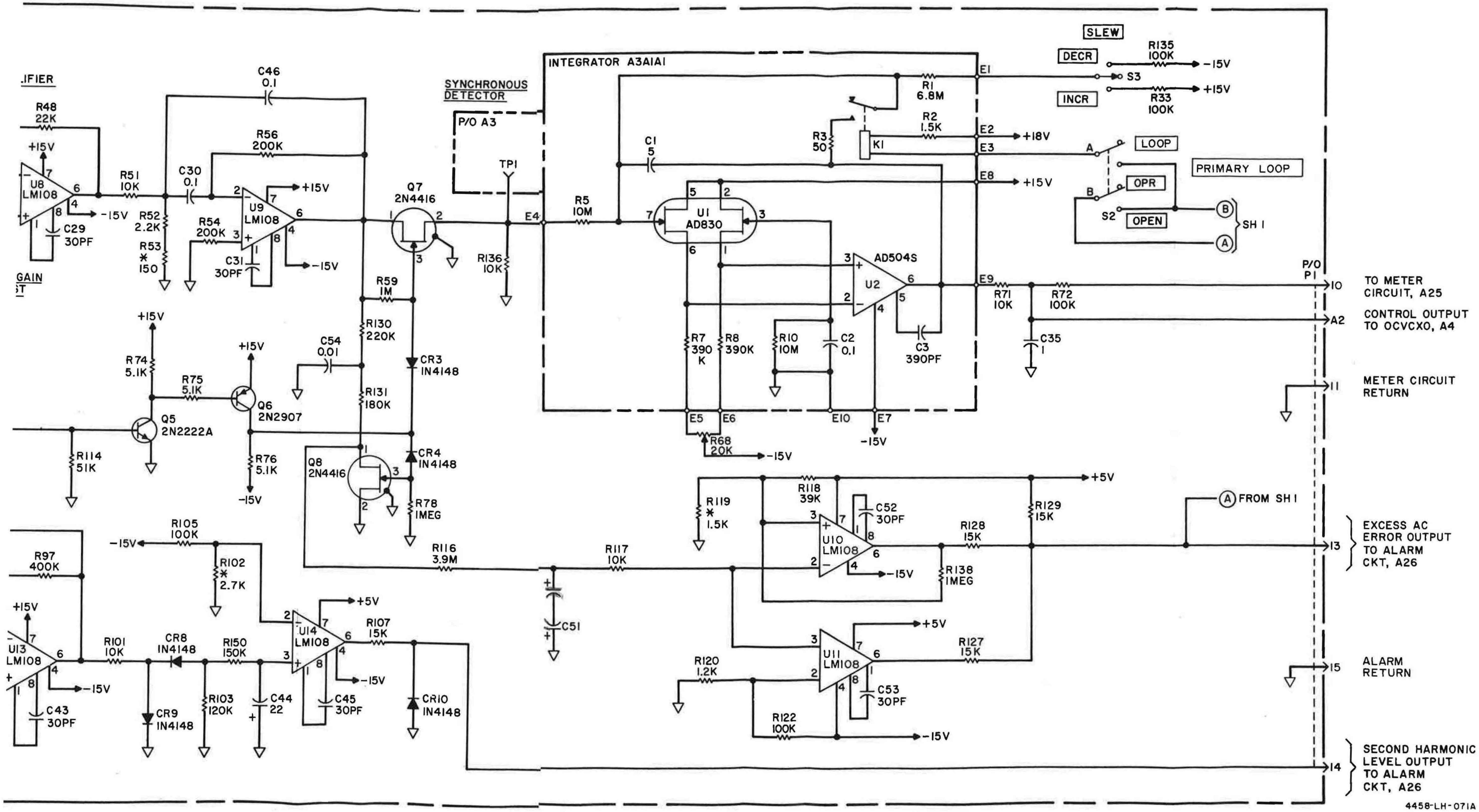

Figure 8-8. Primary Loop A3, Schematic Diagram (Sheet 2 of 2)

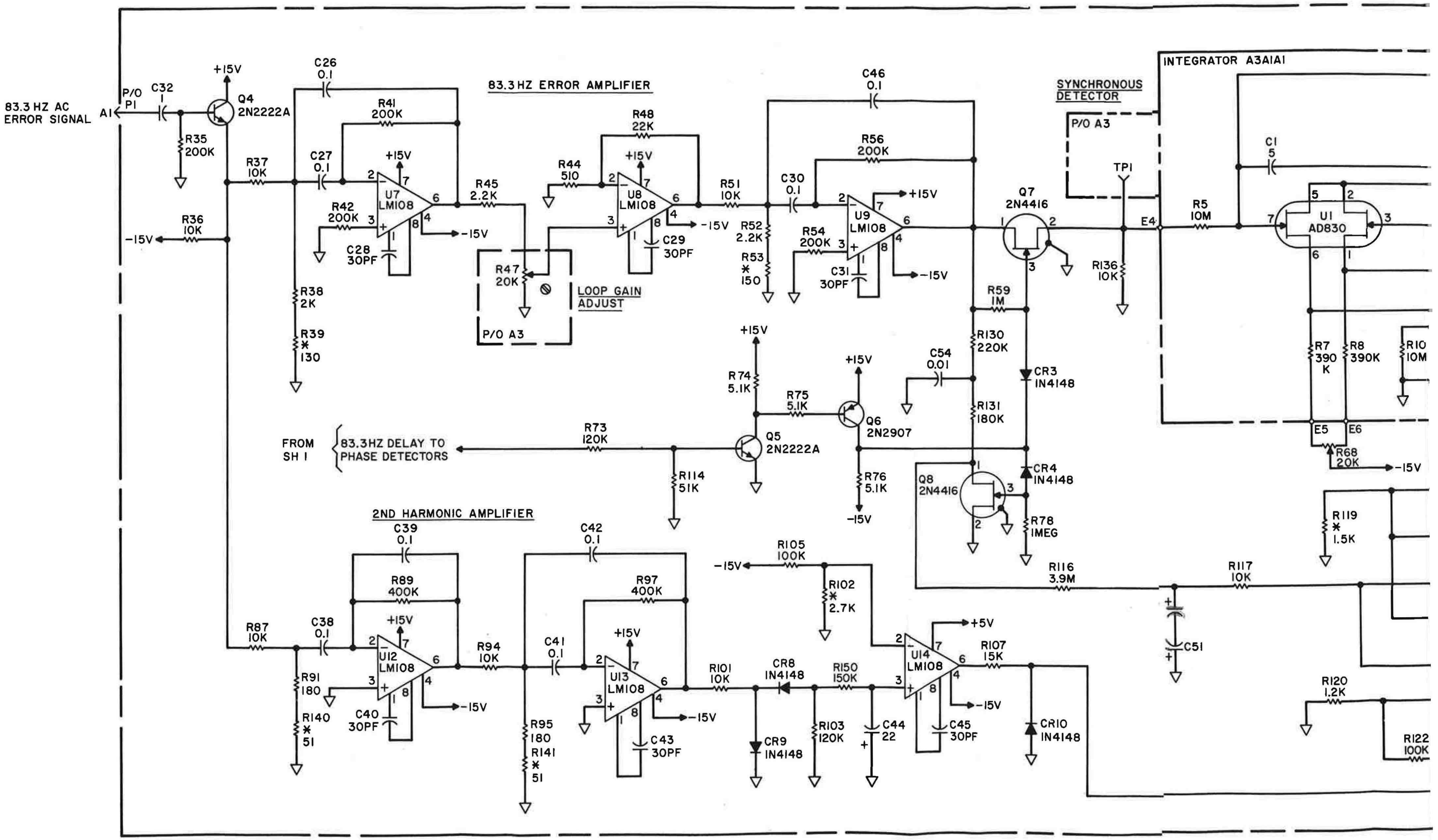
83.3 HZ AC ERROR SIGNAL
A1
P/O P1
C32 1
+15V
Q4 2N2222A
R35 200K
C26 0.1
R41 200K
R37 10K
C27 0.1
+15V
U7 LM108
R42 200K
C28 30PF
R36 10K
-15V
-15V
R38 2K
R39 * 130
83.3 HZ ERROR AMPLIFIER
R45 2.2K
R47 20K
P/O A3
LOOP GAIN ADJUST
R44 510
R48 22K
+15V
U8 LM108
C29 30PF
-15V
R51 10K
R52 2.2K
R53 * 150
C46 0.1
R56 200K
C30 0.1
U9 LM108
R54 200K
C31 30PF
+15V
-15V
Q7 2N4416
R59 1M
R130 220K
C54 0.01
R131 180K
CR3 1N4148
CR4 1N4148
Q8 2N4416
R78 1MEG
SYNCHRONOUS DETECTOR
P/O A3
TP1
R136 10K
INTEGRATOR A3A1A1
E4
R5 10M
C1 5
U1 AD830
R7 390 K
R8 390K
R10 10M
E5
E6
R68 20K
-15V
+15V
R74 5.1K
+15V
R75 5.1K
Q6 2N2907
FROM SH 1
83.3HZ DELAY TO PHASE DETECTORS
R73 120K
Q5 2N2222A
R114 51K
R76 5.1K
-15V
2ND HARMONIC AMPLIFIER
C39 0.1
R89 400K
R87 10K
C38 0.1
+15V
U12 LM108
R91 180
R140 * 51
C40 30PF
-15V
R94 10K
C42 0.1
R97 400K
C41 0.1
+15V
U13 LM108
R95 180
R141 * 51
C43 30PF
-15V
R101 10K
CR8 1N4148
CR9 1N4148
R103 120K
R150 150K
C44 22
R105 100K
-15V
R102 * 2.7K
U14 LM108
+5V
-15V
C45 30PF
R107 15K
CR10 1N4148
R116 3.9M
R117 10K
C51
R119 * 1.5K
R120 1.2K
R122 100K

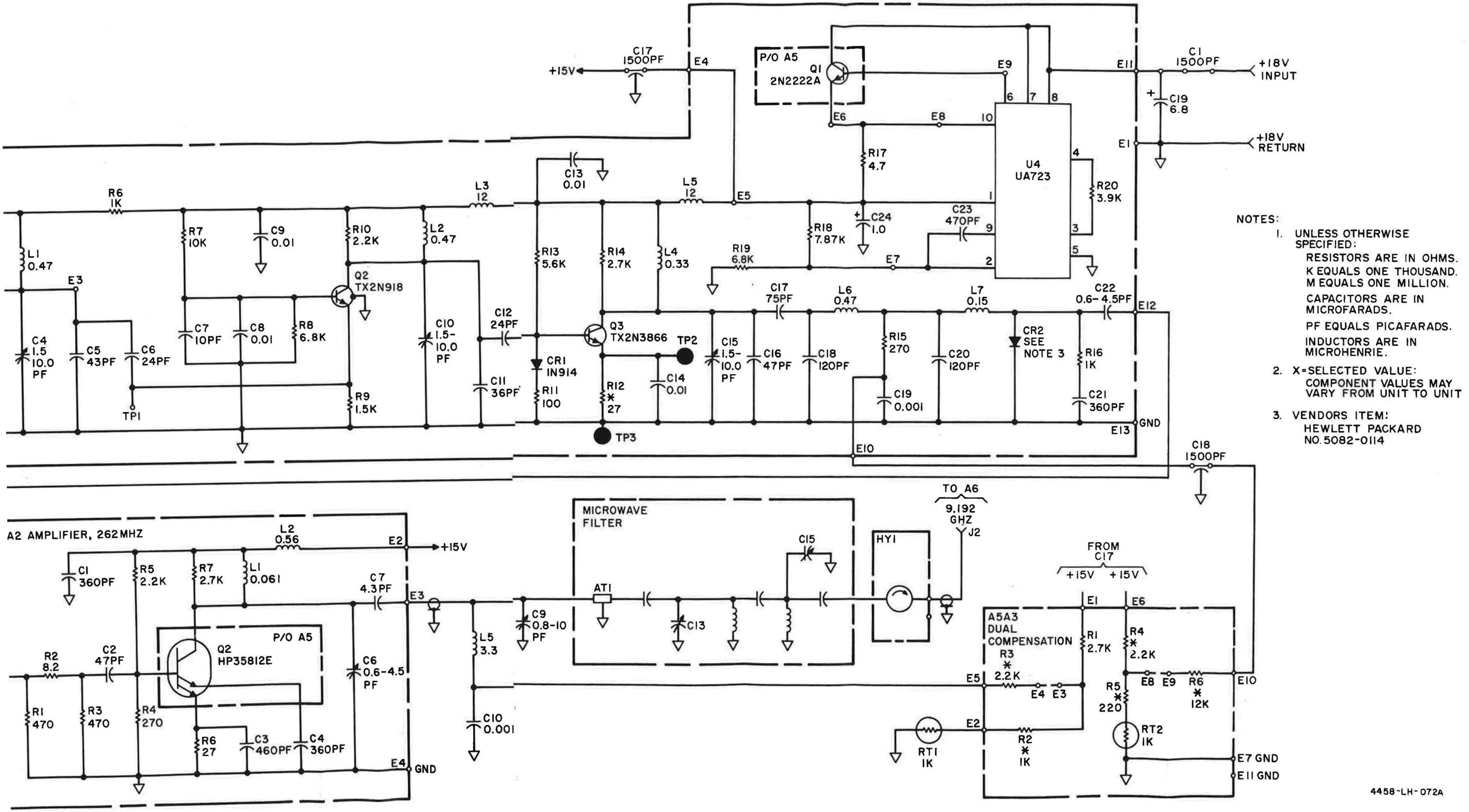

Figure 8-9. Times 630 Multiplier A5, Schematic Diagram

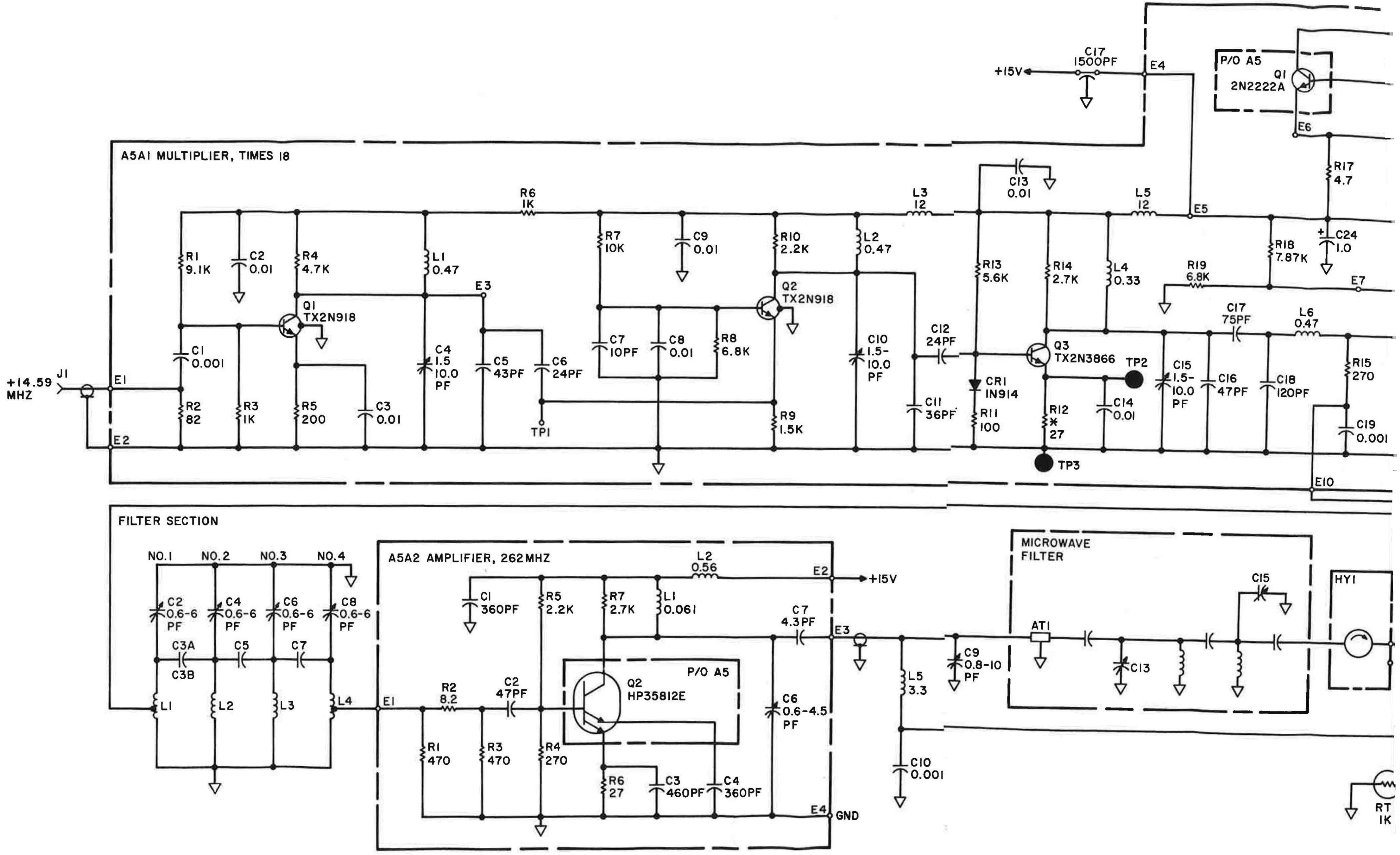
A5A1 MULTIPLIER, TIMES 18
+14.59 MHZ
J1
E1
E2
E3
E4
E5
E6
E7
E10
R1 9.1K
R2 82
R3 1K
R4 4.7K
R5 200
R6 1K
R7 10K
R8 6.8K
R9 1.5K
R10 2.2K
R11 100
R12 * 27
R13 5.6K
R14 2.7K
R15 270
R17 4.7
R18 7.87K
R19 6.8K
C1 0.001
C2 0.01
C3 0.01
C4 1.5 10.0 PF
C5 43PF
C6 24PF
C7 10PF
C8 0.01
C9 0.01
C10 1.5- 10.0 PF
C11 36PF
C12 24PF
C13 0.01
C14 0.01
C15 1.5- 10.0 PF
C16 47PF
C17 75PF
C17 1500PF
C18 120PF
C19 0.001
C24 1.0
L1 0.47
L2 0.47
L3 12
L4 0.33
L5 12
L6 0.47
Q1 TX2N918
Q2 TX2N918
Q3 TX2N3866
CR1 IN914
TP1
TP2
TP3
+15V
P/O A5
Q1 2N2222A
FILTER SECTION
NO.1
NO.2
NO.3
NO.4
C2 0.6-6 PF
C4 0.6-6 PF
C6 0.6-6 PF
C8 0.6-6 PF
C3A
C3B
C5
C7
L1
L2
L3
L4
A5A2 AMPLIFIER, 262MHZ
E1
E2
E3
E4
GND
+15V
C1 360PF
R5 2.2K
R7 2.7K
L1 0.061
L2 0.56
C7 4.3PF
R2 8.2
C2 47PF
P/O A5
Q2 HP35812E
C6 0.6-4.5 PF
R1 470
R3 470
R4 270
R6 27
C3 460PF
C4 360PF
C9 0.8-10 PF
L5 3.3
C10 0.001
MICROWAVE FILTER
AT1
C13
C15
HY1
RT 1K

Figur

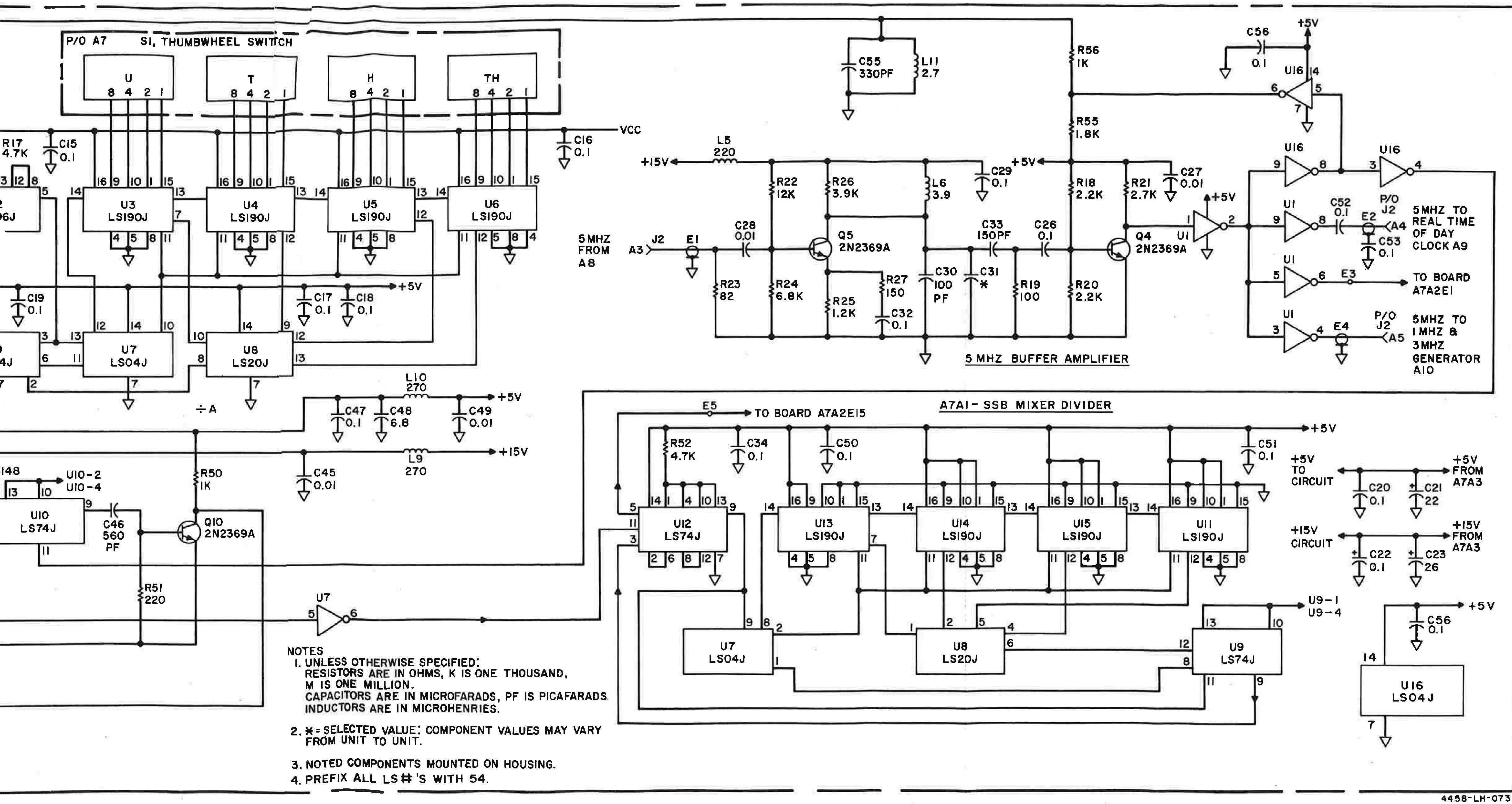

Figure 8-10. Synthesizer A7, Schematic Diagram (Sheet 1 of 3)

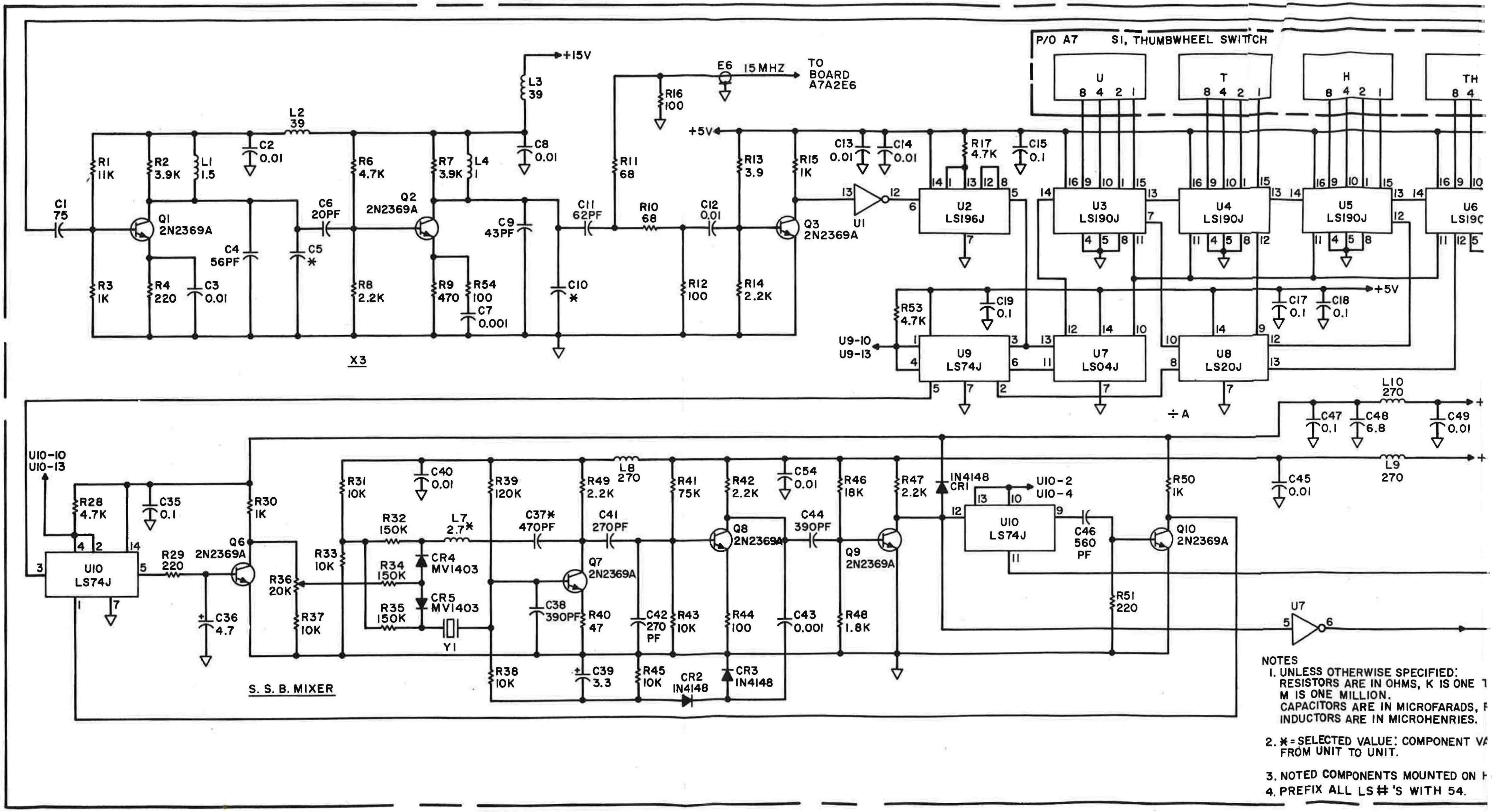

NOTES

1. UNLESS OTHERWISE SPECIFIED:
   RESISTORS ARE IN OHMS, K IS ONE T
   M IS ONE MILLION.
   CAPACITORS ARE IN MICROFARADS, P
   INDUCTORS ARE IN MICROHENRIES.
2. * = SELECTED VALUE: COMPONENT VA FROM UNIT TO UNIT.
3. NOTED COMPONENTS MOUNTED ON H
4. PREFIX ALL LS #'S WITH 54.

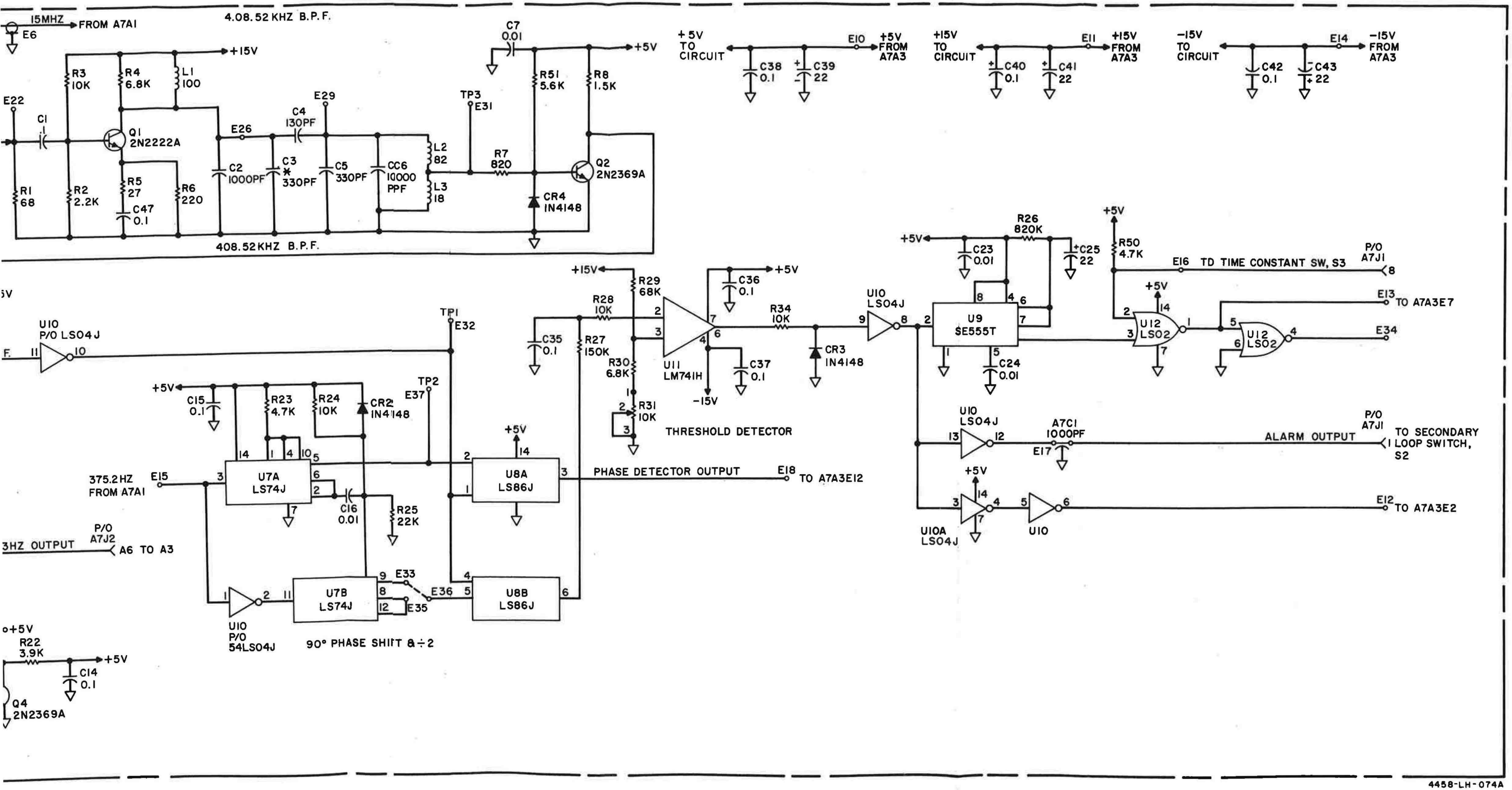

Figure 8-10. Synthesizer A7, Schematic Diagram (Sheet 2 of 3)

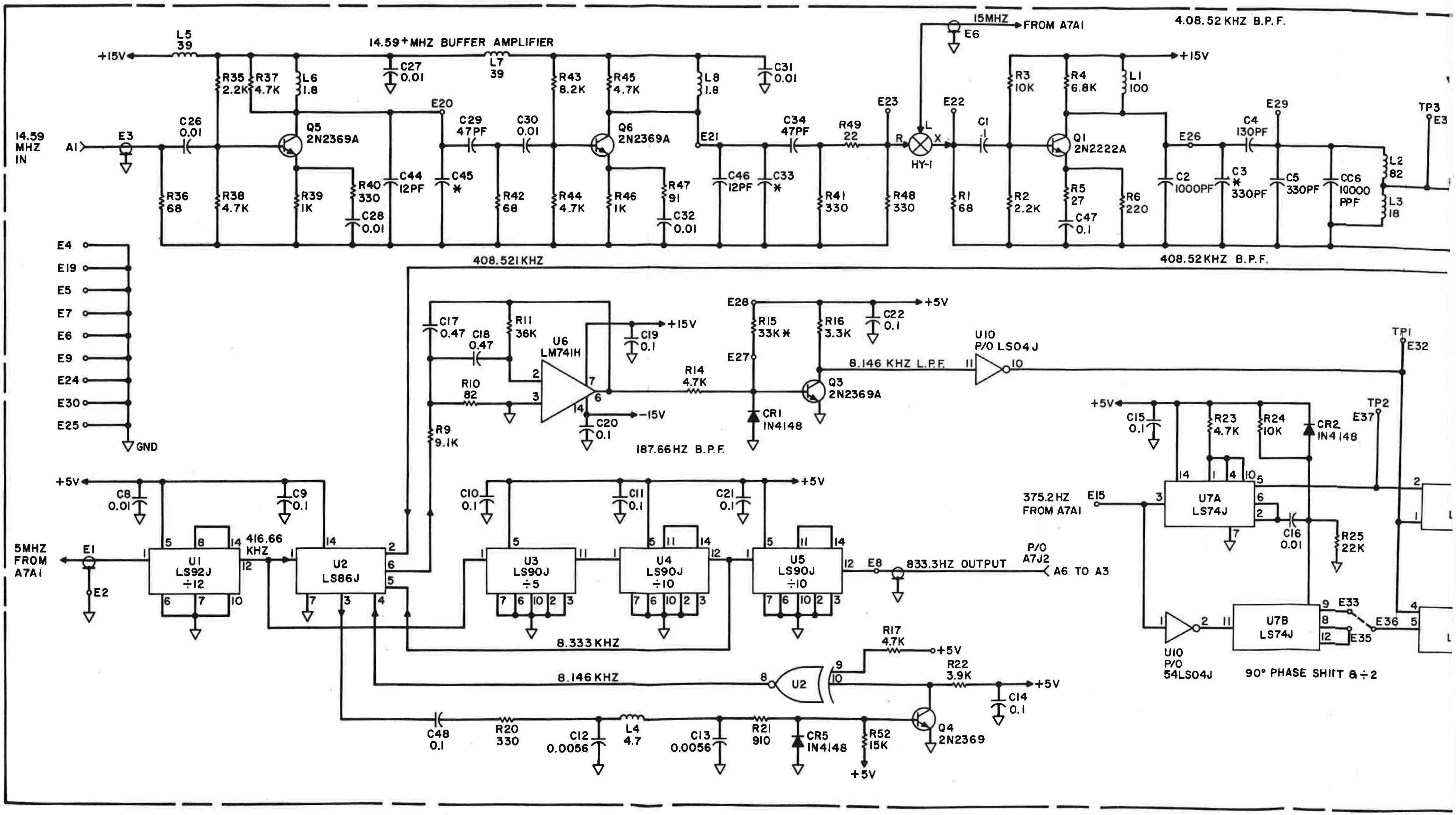

14.59 MHZ IN
A1
E3
+15V
L5 39
14.59+ MHZ BUFFER AMPLIFIER
L7 39
C26 0.01
R35 2.2K
R37 4.7K
L6 1.8
Q5 2N2369A
C27 0.01
E20
C29 47PF
C30 0.01
R43 8.2K
R45 4.7K
Q6 2N2369A
L8 1.8
C31 0.01
E21
C34 47PF
R49 22
E23
E22
15MHZ FROM A7A1
E6
HY-1
C1 .1
R3 10K
R4 6.8K
L1 100
Q1 2N2222A
+15V
4.08.52 KHZ B.P.F.
E29
C4 130PF
E26
TP3 E3
R36 68
R38 4.7K
R39 1K
R40 330
C28 0.01
C44 12PF
C45 *
R42 68
R44 4.7K
R46 1K
R47 91
C32 0.01
C46 12PF
C33 *
R41 330
R48 330
R1 68
R2 2.2K
R5 27
C47 0.1
R6 220
C2 1000PF
C3 * 330PF
C5 330PF
CC6 10000 PPF
L2 82
L3 18
E4
E19
E5
E7
E6
E9
E24
E30
E25
GND
408.521 KHZ
408.52 KHZ B.P.F.
C17 0.47
C18 0.47
R11 36K
U6 LM741H
+15V
C19 0.1
R10 82
R9 9.1K
C20 0.1
-15V
187.66 HZ B.P.F.
E28
+5V
R15 33K *
R16 3.3K
C22 0.1
E27
R14 4.7K
CR1 IN4148
Q3 2N2369A
U10 P/O LS04J
8.146 KHZ L.P.F.
TP1 E32
+5V
C15 0.1
R23 4.7K
R24 10K
CR2 IN4148
TP2 E37
+5V
C8 0.01
C9 0.1
C10 0.1
C11 0.1
C21 0.1
+5V
5MHZ FROM A7A1
E1
E2
U1 LS92J ÷12
416.66 KHZ
U2 LS86J
U3 LS90J ÷5
U4 LS90J ÷10
U5 LS90J ÷10
E8
833.3HZ OUTPUT
P/O A7J2
A6 TO A3
375.2 HZ FROM A7A1
E15
U7A LS74J
C16 0.01
R25 22K
8.333 KHZ
R17 4.7K
+5V
R22 3.9K
+5V
8.146 KHZ
U2
C14 0.1
U10 P/O 54LS04J
U7B LS74J
E33
E35
E36
90° PHASE SHIFT & ÷ 2
C48 0.1
R20 330
C12 0.0056
L4 4.7
C13 0.0056
R21 910
CR5 IN4148
R52 15K
+5V
Q4 2N2369

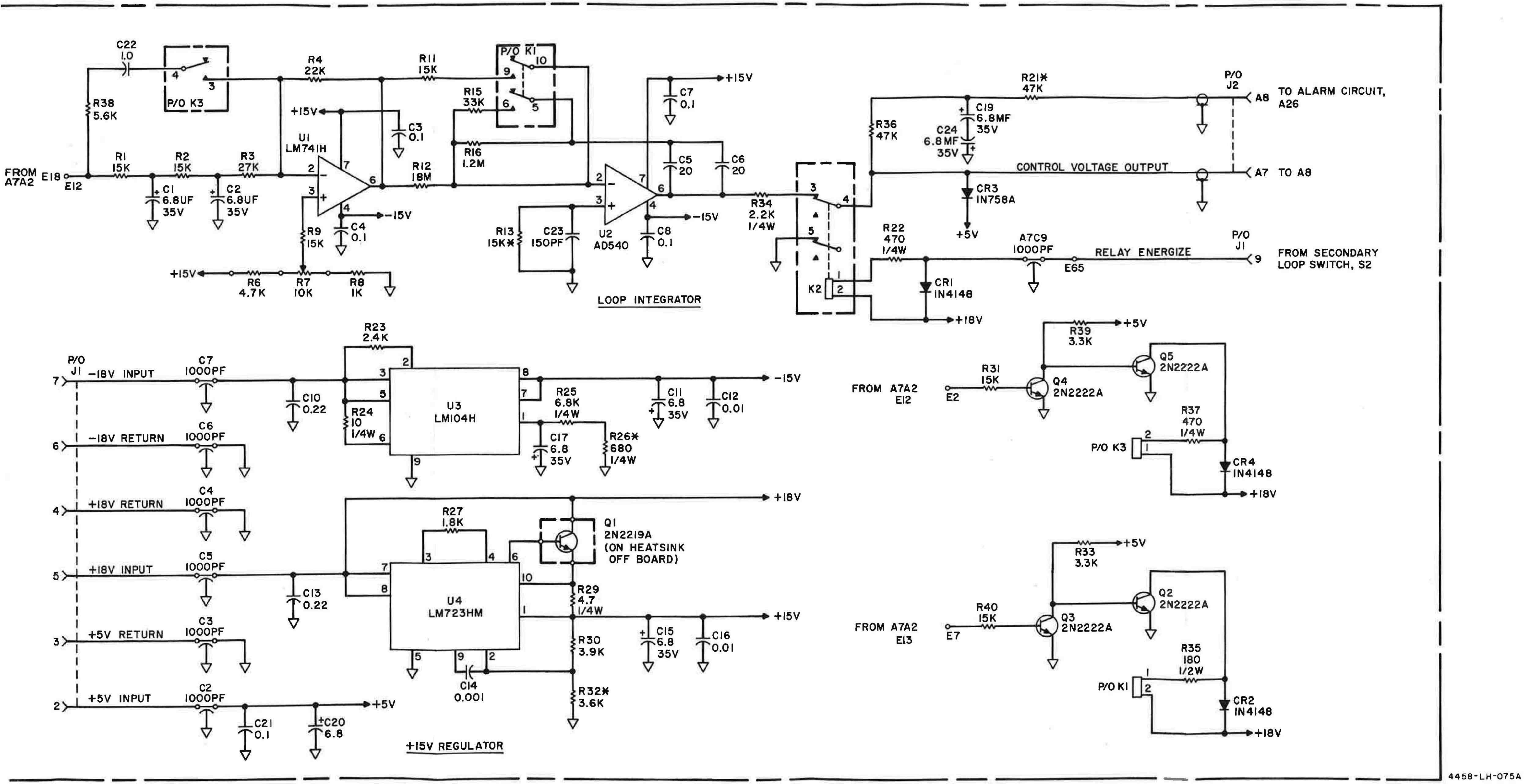

Figure 8-10. Synthesizer A7, Schematic Diagram (Sheet 3 of 3)

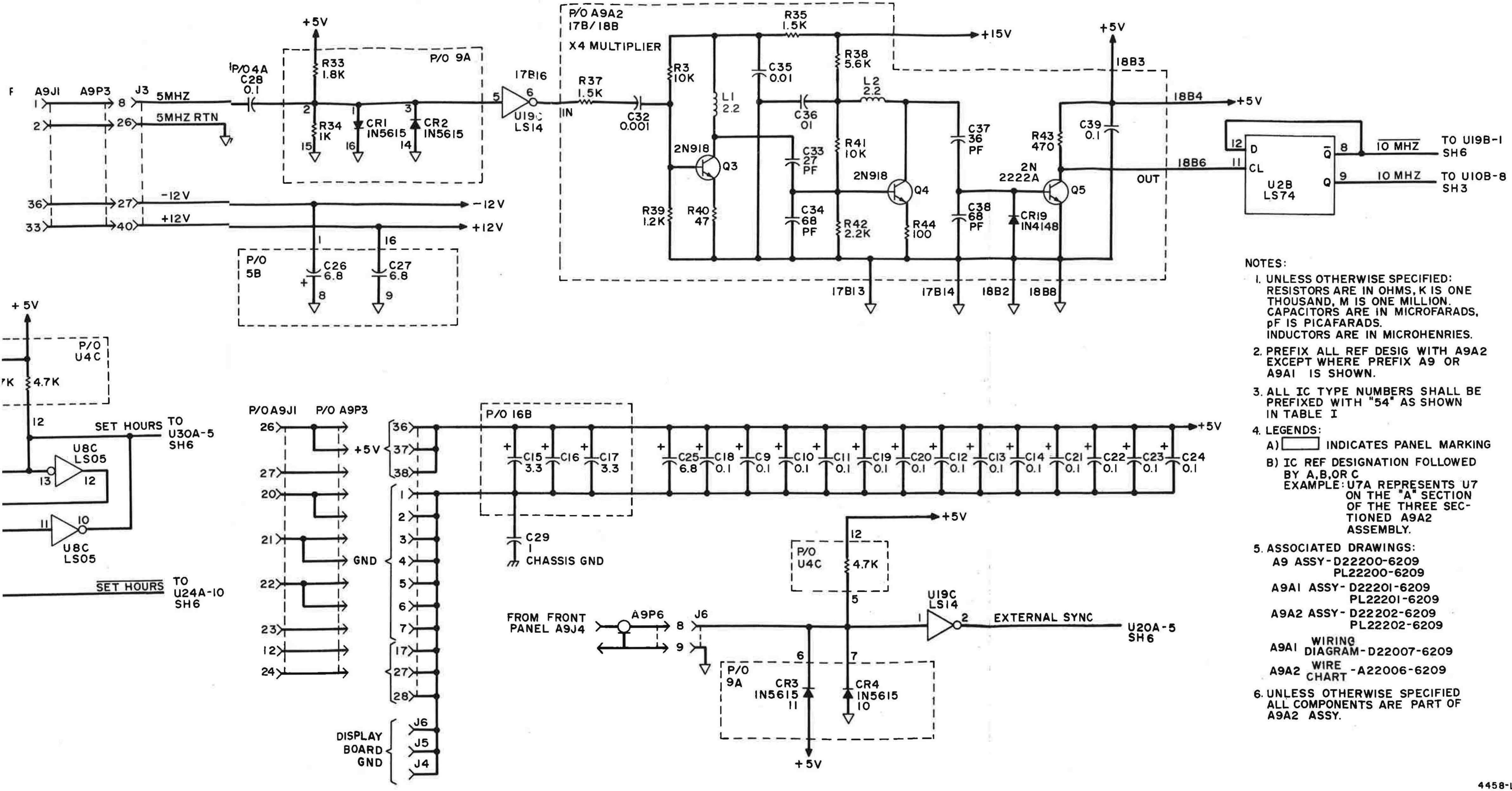

NOTES:

1. UNLESS OTHERWISE SPECIFIED: RESISTORS ARE IN OHMS, K IS ONE THOUSAND, M IS ONE MILLION. CAPACITORS ARE IN MICROFARADS, pF IS PICAFARADS. INDUCTORS ARE IN MICROHENRIES.
2. PREFIX ALL REF DESIG WITH A9A2 EXCEPT WHERE PREFIX A9 OR A9A1 IS SHOWN.
3. ALL IC TYPE NUMBERS SHALL BE PREFIXED WITH "54" AS SHOWN IN TABLE I
4. LEGENDS:
   A) ▭ INDICATES PANEL MARKING
   B) IC REF DESIGNATION FOLLOWED BY A,B,OR C
   EXAMPLE: U7A REPRESENTS U7 ON THE "A" SECTION OF THE THREE SECTIONED A9A2 ASSEMBLY.
5. ASSOCIATED DRAWINGS:
   A9 ASSY-D22200-6209 PL22200-6209
   A9A1 ASSY-D22201-6209 PL22201-6209
   A9A2 ASSY-D22202-6209 PL22202-6209
   A9A1 WIRING DIAGRAM-D22007-6209
   A9A2 WIRE CHART-A22006-6209
6. UNLESS OTHERWISE SPECIFIED ALL COMPONENTS ARE PART OF A9A2 ASSY.

Figure 8-11. Real Time of Day Clock A9, Schematic Diagram (Sheet 1 of 7)

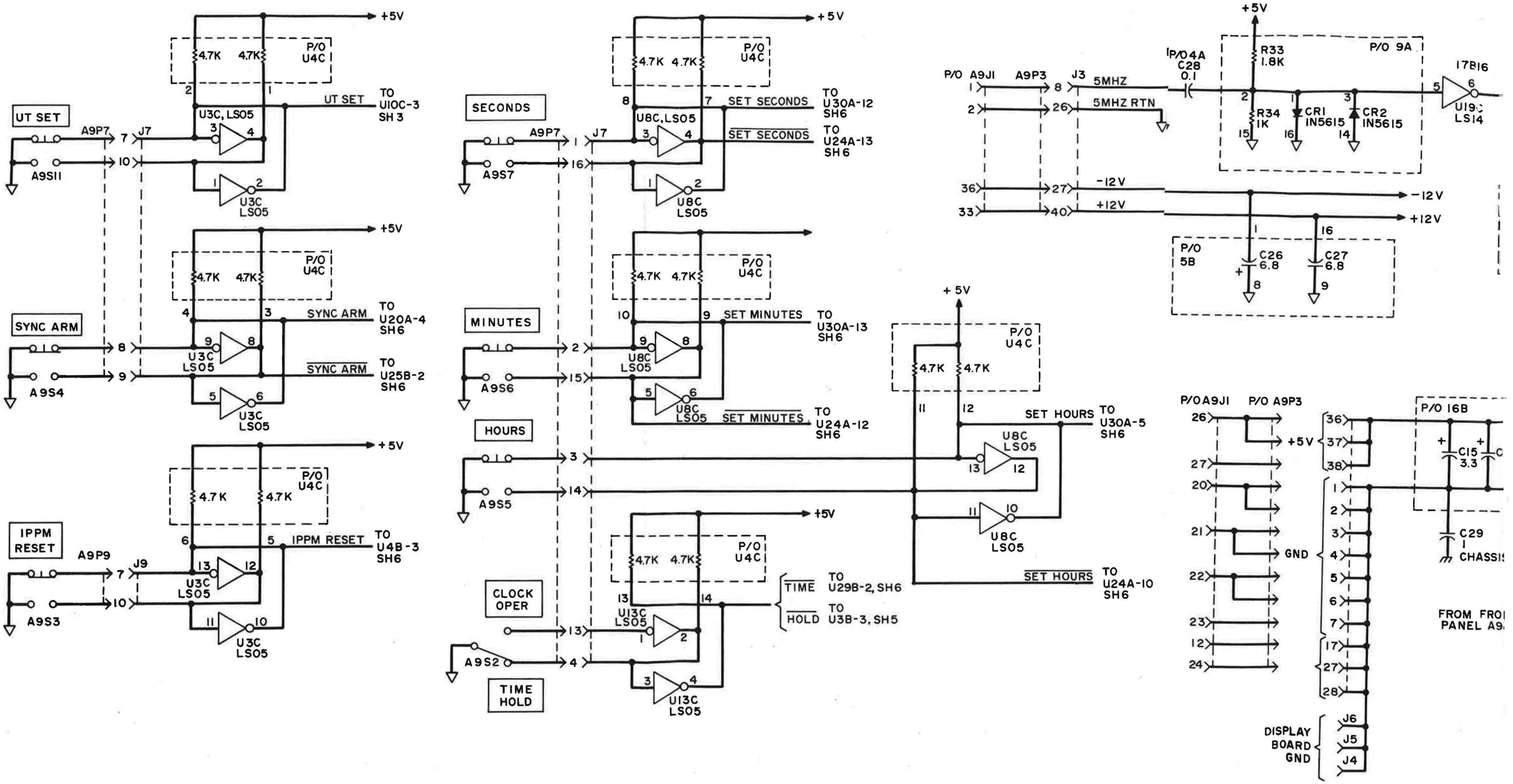

+5V
4.7K 4.7K
P/O U4C
UT SET
A9P7 7 J7
10
A9S11
U3C, LS05
UT SET TO U10C-3 SH 3
SYNC ARM
8
9
A9S4
SYNC ARM TO U20A-4 SH6
SYNC ARM TO U25B-2 SH6
IPPM RESET
A9P9 7 J9
10
A9S3
IPPM RESET TO U4B-3 SH6
U3C LS05
SECONDS
A9P7 1 J7
16
A9S7
U8C, LS05
SET SECONDS TO U30A-12 SH6
SET SECONDS TO U24A-13 SH6
MINUTES
2
15
A9S6
SET MINUTES TO U30A-13 SH6
SET MINUTES TO U24A-12 SH6
HOURS
3
14
A9S5
SET HOURS TO U30A-5 SH6
SET HOURS TO U24A-10 SH6
U8C LS05
CLOCK OPER
13
4
A9S2
TIME HOLD
U13C LS05
TIME TO U29B-2, SH6
HOLD TO U3B-3, SH5
P/O A9J1 A9P3 J3
5MHZ
5MHZ RTN
P/O4A C28 0.1
P/O 9A
R33 1.8K
R34 1K
CR1 IN5615
CR2 IN5615
17B16
U19C LS14
-12V
+12V
P/O 5B
C26 6.8
C27 6.8
P/O A9J1 P/O A9P3
+5V
GND
P/O 16B
C15 3.3
C29 1
CHASSIS
FROM FRONT PANEL A9
DISPLAY BOARD GND
J6 J5 J4

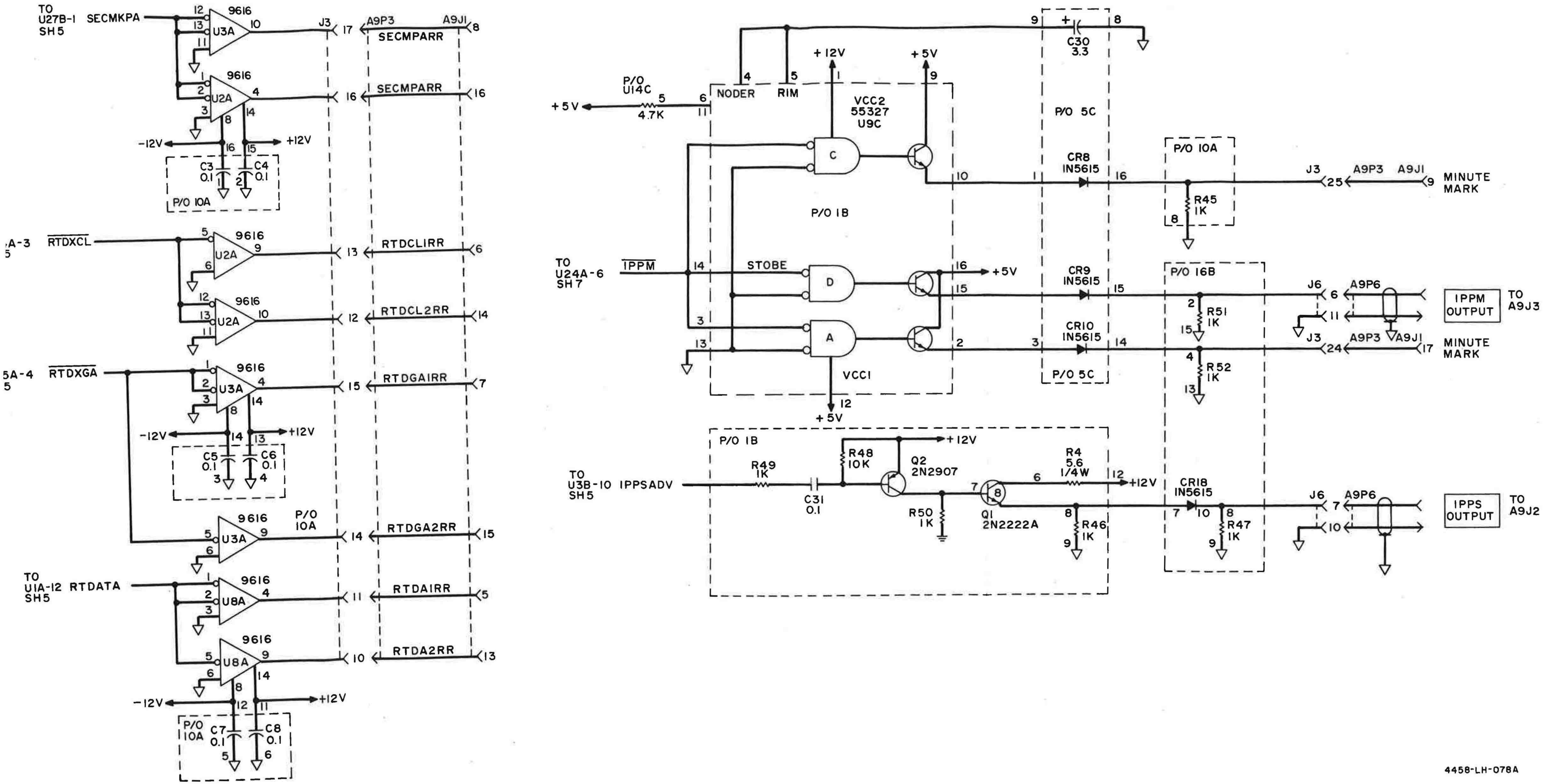

4458-LH-078A

Figure 8-11. Real Time of Day Clock A9, Schematic Diagram (Sheet 2 of 7)

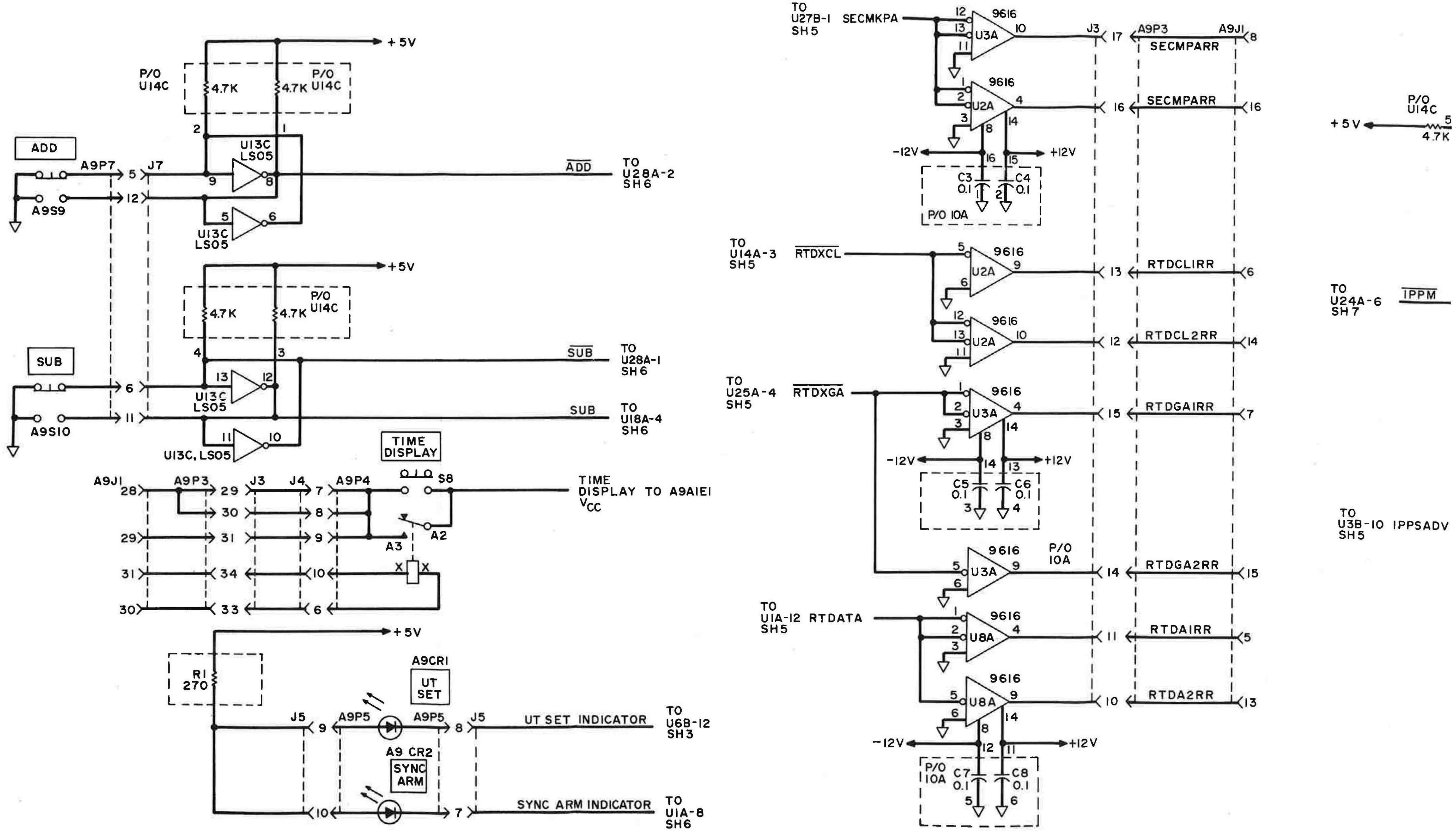

ADD
A9S9
A9P7
J7
U13C LS05
P/O U14C
4.7K
+5V
ADD
TO U28A-2 SH6
SUB
A9S10
SUB
TO U28A-1 SH6
SUB
TO U18A-4 SH6
U13C, LS05
TIME DISPLAY
S8
A9J1
A9P3
J3
J4
A9P4
A2
A3
TIME DISPLAY TO A9A1E1 VCC
R1 270
A9CR1
UT SET
J5
A9P5
A9 CR2
SYNC ARM
UT SET INDICATOR
TO U6B-12 SH3
SYNC ARM INDICATOR
TO U1A-8 SH6
TO U27B-1 SH5
SECMKPA
9616
U3A
U2A
SECMPARR
-12V
+12V
C3 0.1
C4 0.1
P/O 10A
TO U14A-3 SH5
RTDXCL
RTDCLIRR
RTDCL2RR
TO U25A-4 SH5
RTDXGA
RTDGAIRR
C5 0.1
C6 0.1
RTDGA2RR
TO U1A-12 RTDATA SH5
U8A
RTDAIRR
RTDA2RR
C7 0.1
C8 0.1
P/O U14C
+5V
4.7K
TO U24A-6 SH7
IPPM
TO U3B-10 IPPSADV SH5

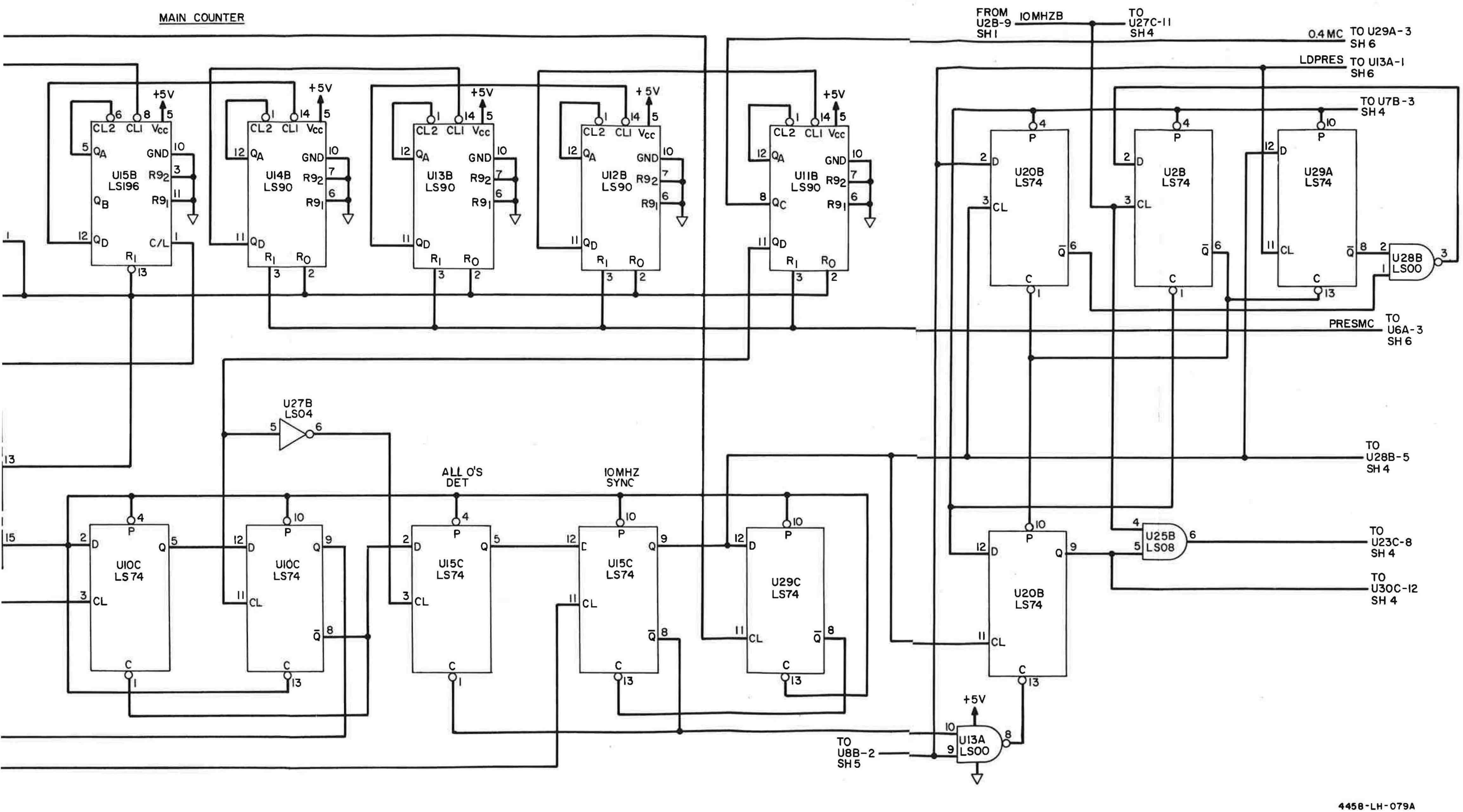

Figure 8-11. Real Time of Day Clock A9, Schematic Diagram (Sheet 3 of 7)

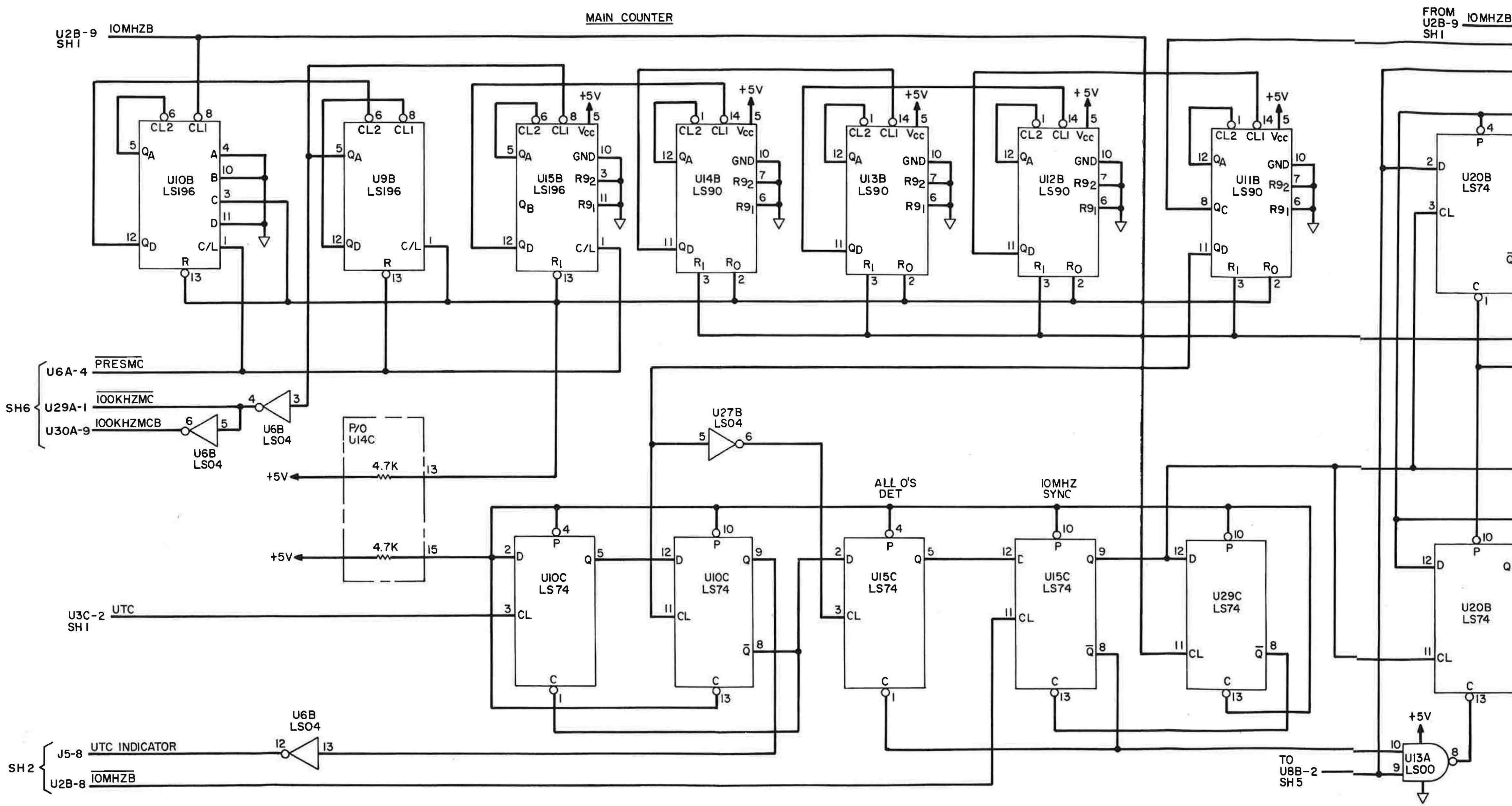

Figure 8-11. Real Tim

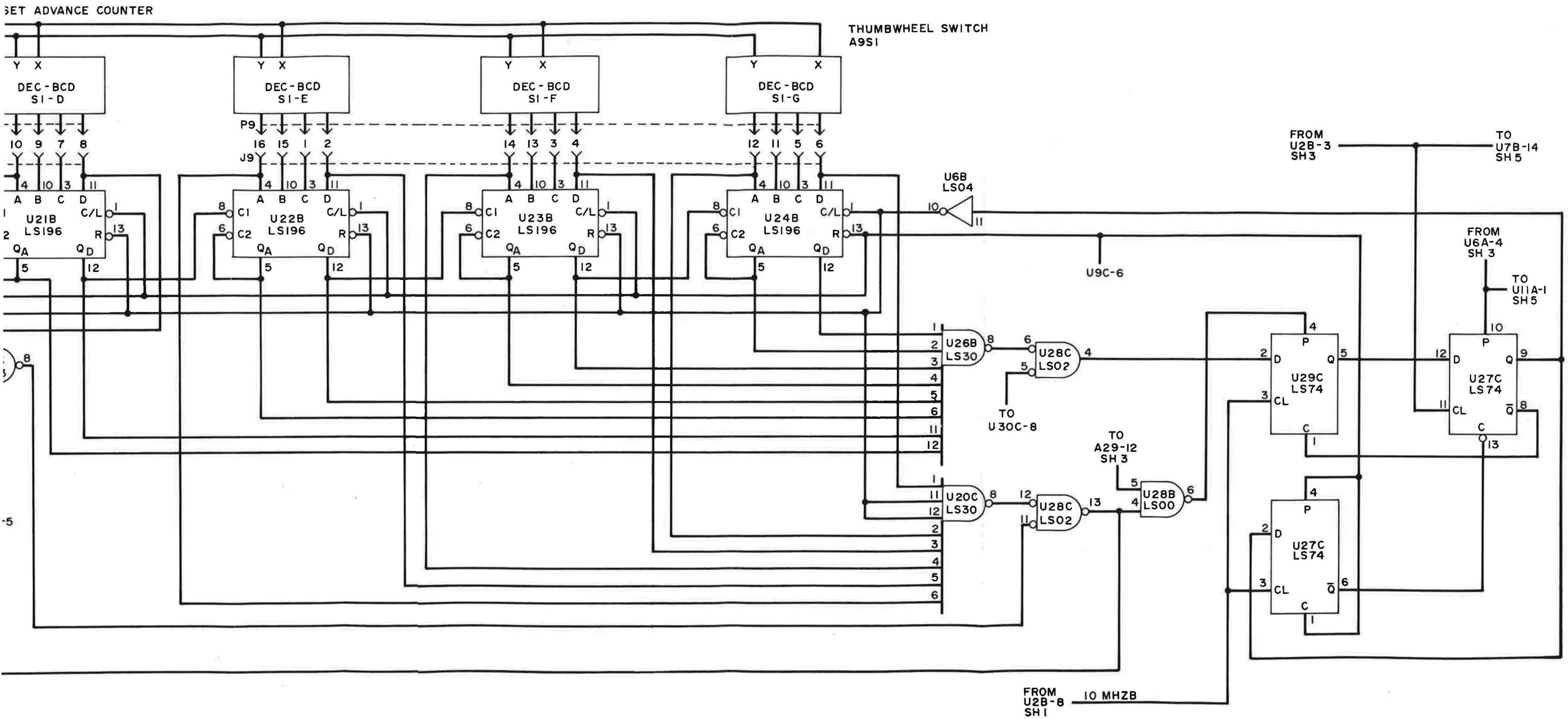

Figure 8-11. Real Time of Day Clock A9, Schematic Diagram (Sheet 4 of 7)

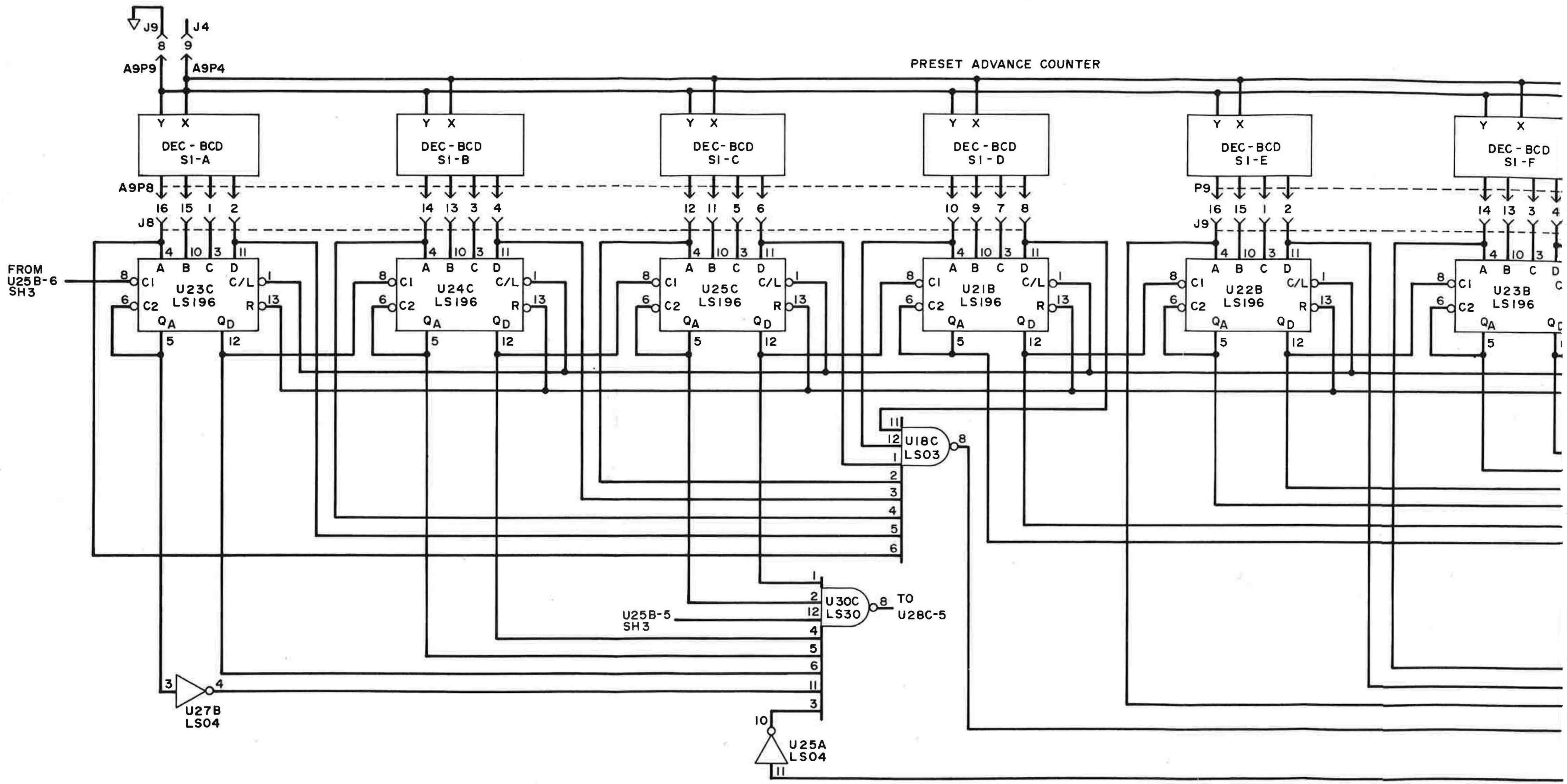

PRESET ADVANCE COUNTER
J9
J4
A9P9
A9P4
A9P8
J8
P9
J9
DEC - BCD S1-A
DEC - BCD S1-B
DEC - BCD S1-C
DEC - BCD S1-D
DEC - BCD S1-E
DEC - BCD S1-F
FROM U25B-6 SH3
U23C LS196
U24C LS196
U25C LS196
U21B LS196
U22B LS196
U23B LS196
U18C LS03
U30C LS30
TO U28C-5
U25B-5 SH3
U27B LS04
U25A LS04

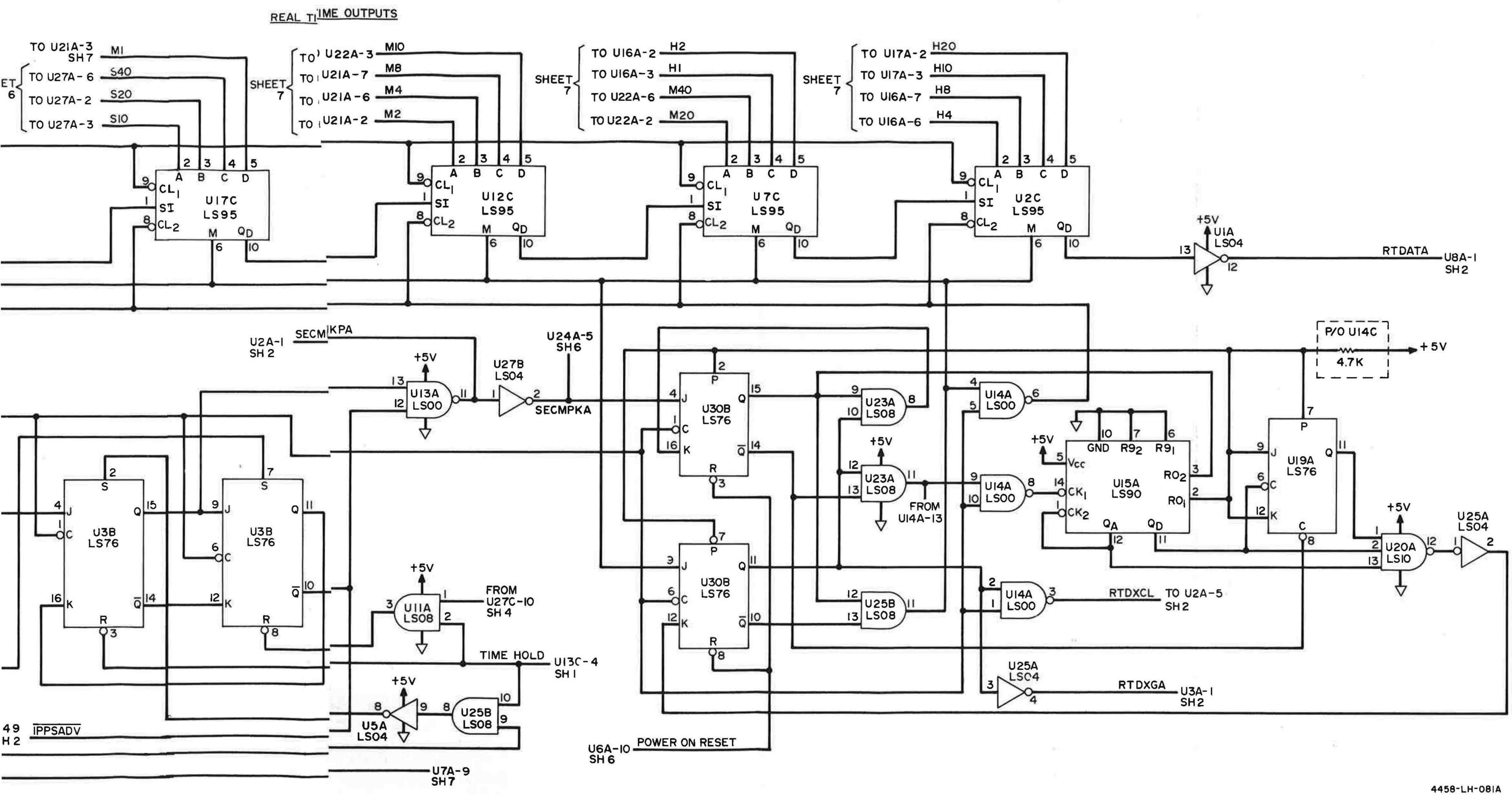

Figure 8-11. Real Time of Day Clock A9, Schematic Diagram (Sheet 5 of 7)

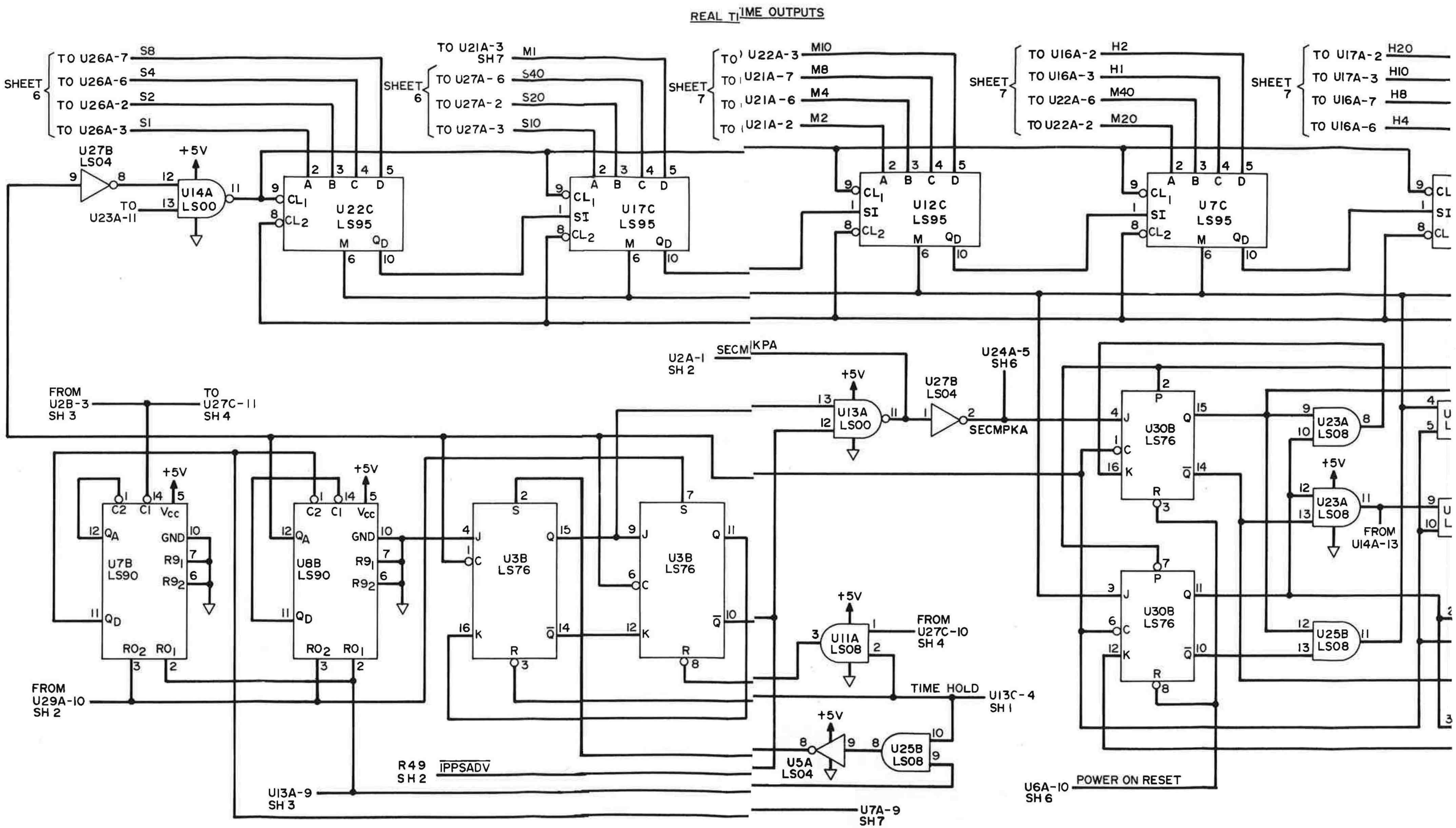

REAL TIME OUTPUTS
SHEET 6
TO U26A-7 S8
TO U26A-6 S4
TO U26A-2 S2
TO U26A-3 S1
TO U21A-3 SH 7 M1
SHEET 6
TO U27A-6 S40
TO U27A-2 S20
TO U27A-3 S10
SHEET 7
TO U22A-3 M10
TO U21A-7 M8
TO U21A-6 M4
TO U21A-2 M2
SHEET 7
TO U16A-2 H2
TO U16A-3 H1
TO U22A-6 M40
TO U22A-2 M20
SHEET 7
TO U17A-2 H20
TO U17A-3 H10
TO U16A-7 H8
TO U16A-6 H4
U27B LS04
+5V
U14A LS00
TO U23A-11
U22C LS95
U17C LS95
U12C LS95
U7C LS95
U2A-1 SH 2 SECMKPA
U24A-5 SH6
U27B LS04
SECMPKA
U13A LS00
U30B LS76
U23A LS08
U25B LS08
FROM U14A-13
FROM U2B-3 SH 3
TO U27C-11 SH 4
U7B LS90
U8B LS90
U3B LS76
FROM U29A-10 SH 2
U11A LS08
FROM U27C-10 SH 4
TIME HOLD
U13C-4 SH 1
U5A LS04
R49 SH 2 IPPSADV
U13A-9 SH 3
U7A-9 SH7
U6A-10 SH 6 POWER ON RESET

Figure 8-11

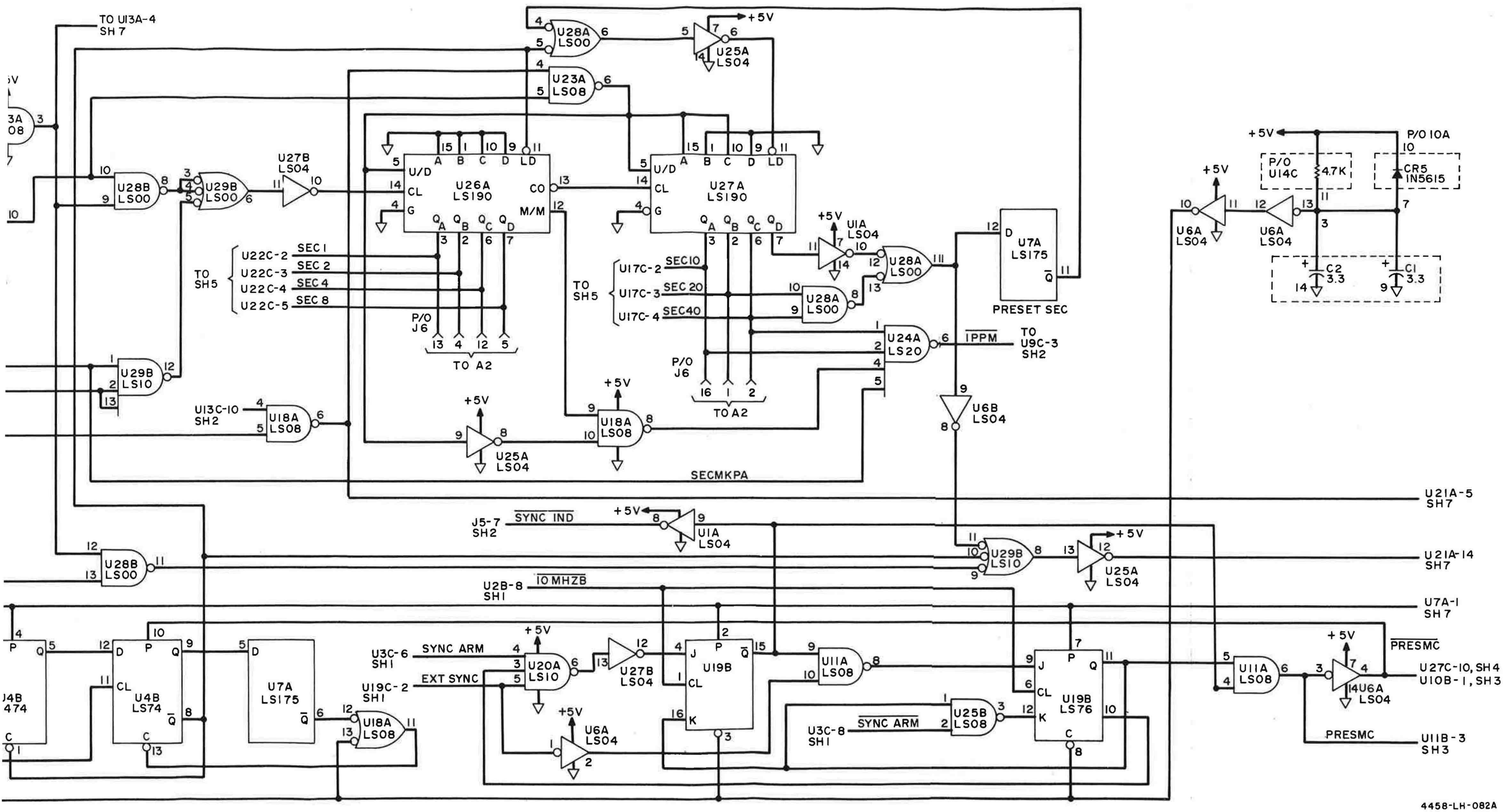

Figure 8-11. Real Time of Day Clock A9, Schematic Diagram (Sheet 6 of 7)

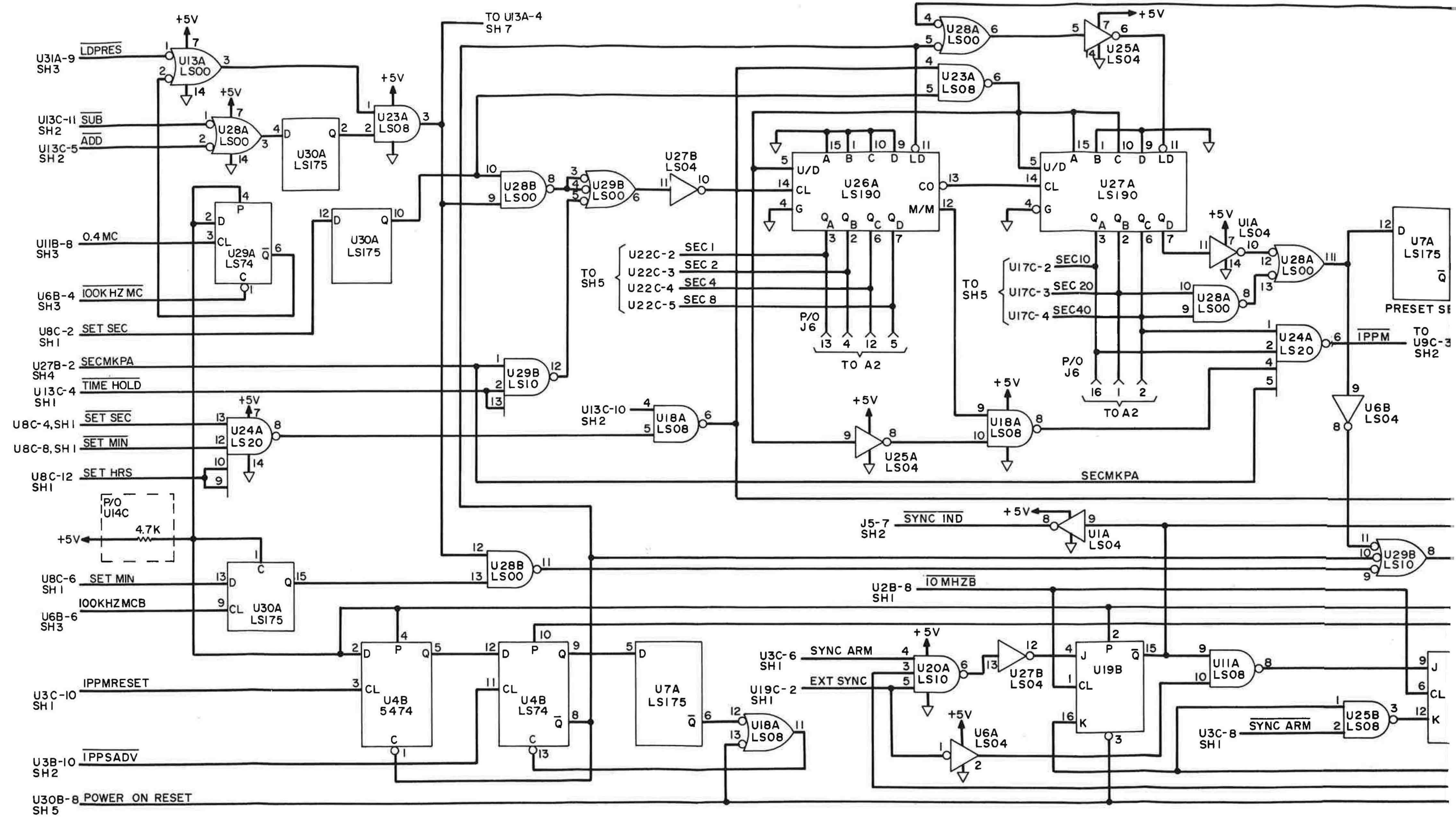

Figure 8-11. Rea

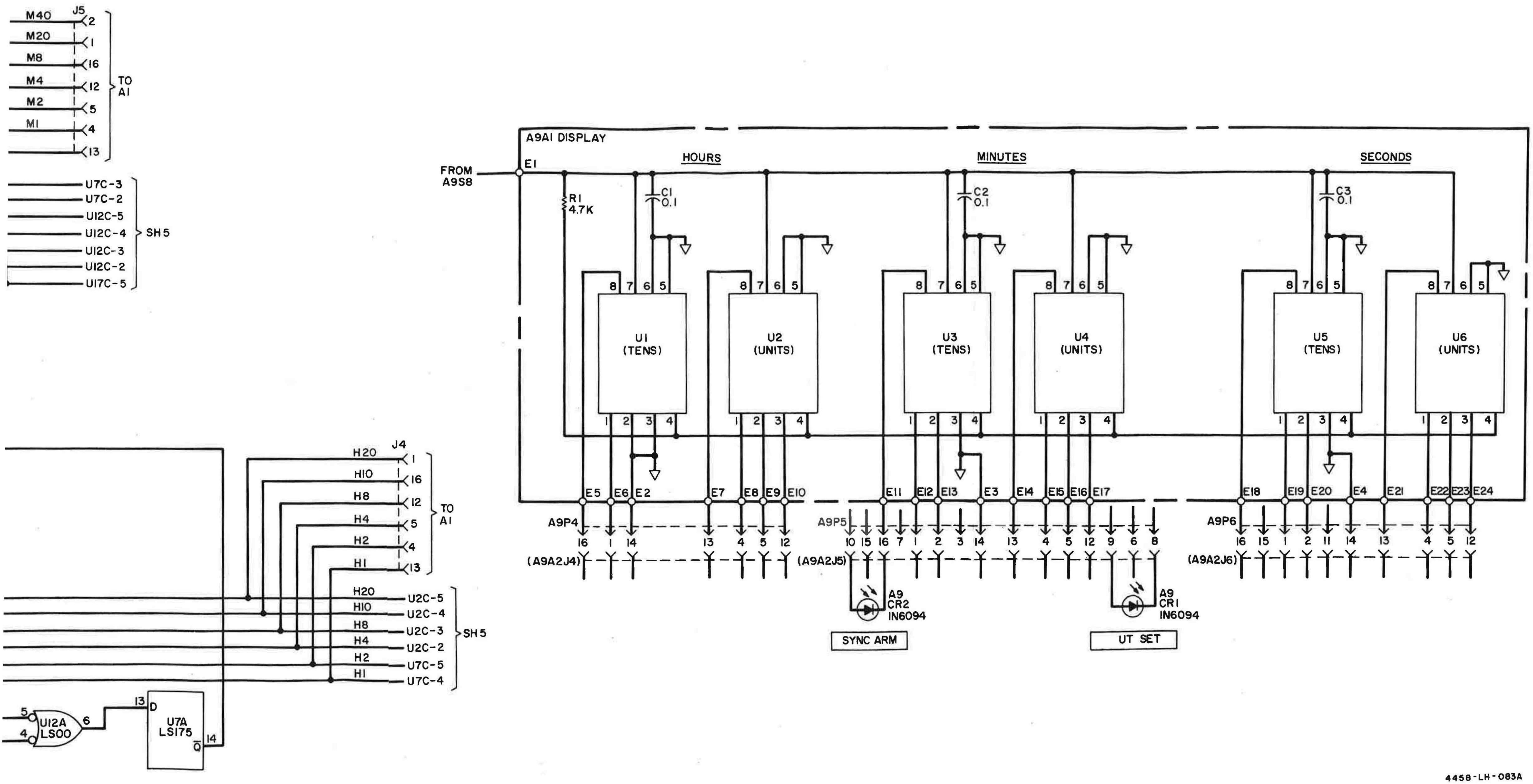

Figure 8-11. Real Time of Day Clock A9, Schematic Diagram (Sheet 7 of 7)

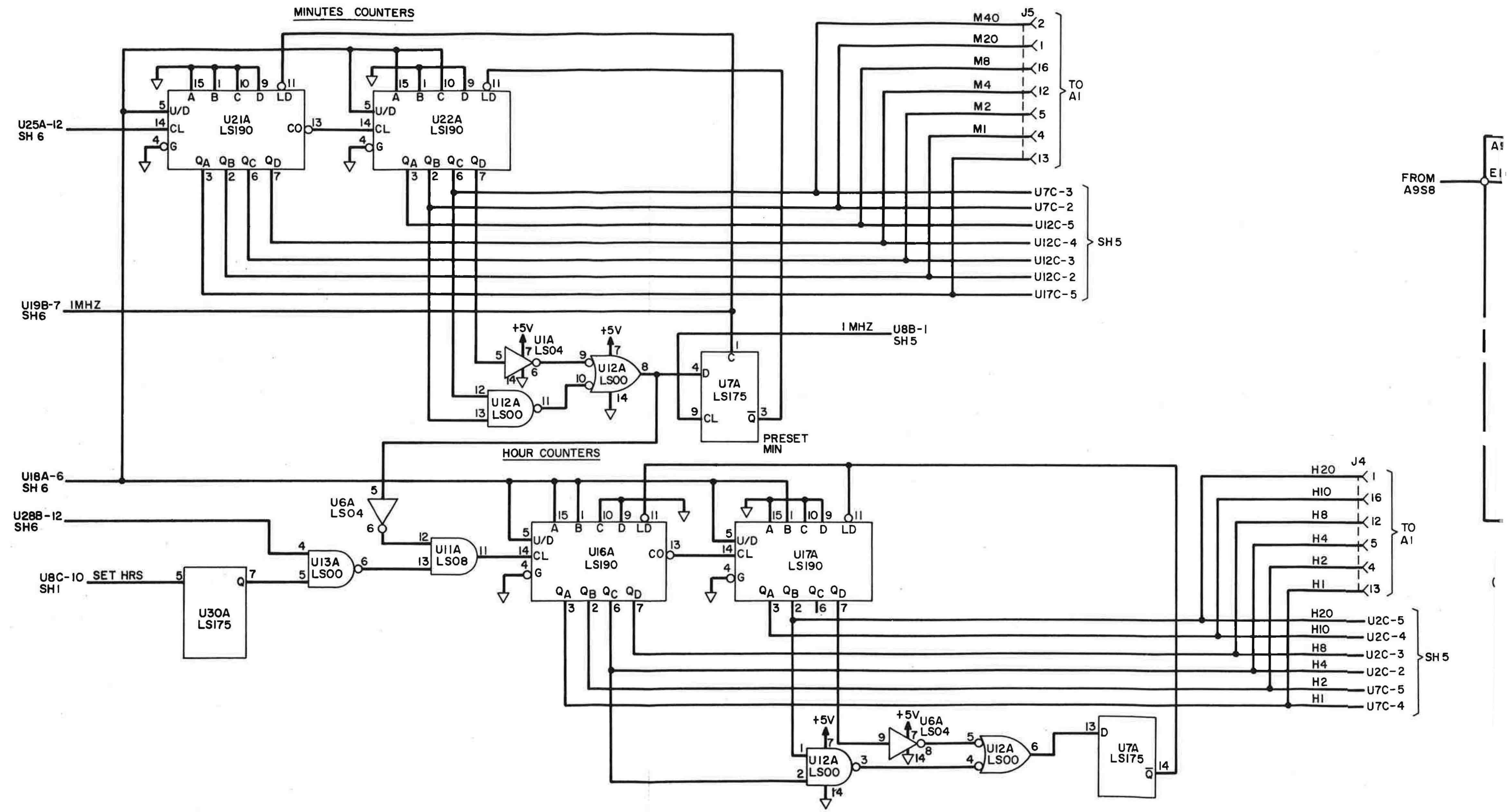
MINUTES COUNTERS
HOUR COUNTERS
U21A LS190
U22A LS190
U16A LS190
U17A LS190
U1A LS04
U12A LS00
U7A LS175
U6A LS04
U11A LS08
U13A LS00
U30A LS175
U25A-12 SH 6
U19B-7 1MHZ SH6
1 MHZ U8B-1 SH5
U18A-6 SH 6
U28B-12 SH6
U8C-10 SET HRS SH1
PRESET MIN
+5V
U/D
CL
G
LD
CO
A B C D
QA QB QC QD
M40 M20 M8 M4 M2 M1
J5
TO A1
U7C-3
U7C-2
U12C-5
U12C-4
U12C-3
U12C-2
U17C-5
SH5
H20 H10 H8 H4 H2 H1
J4
TO A1
U2C-5
U2C-4
U2C-3
U2C-2
U7C-5
U7C-4
SH 5
FROM A9S8
E1

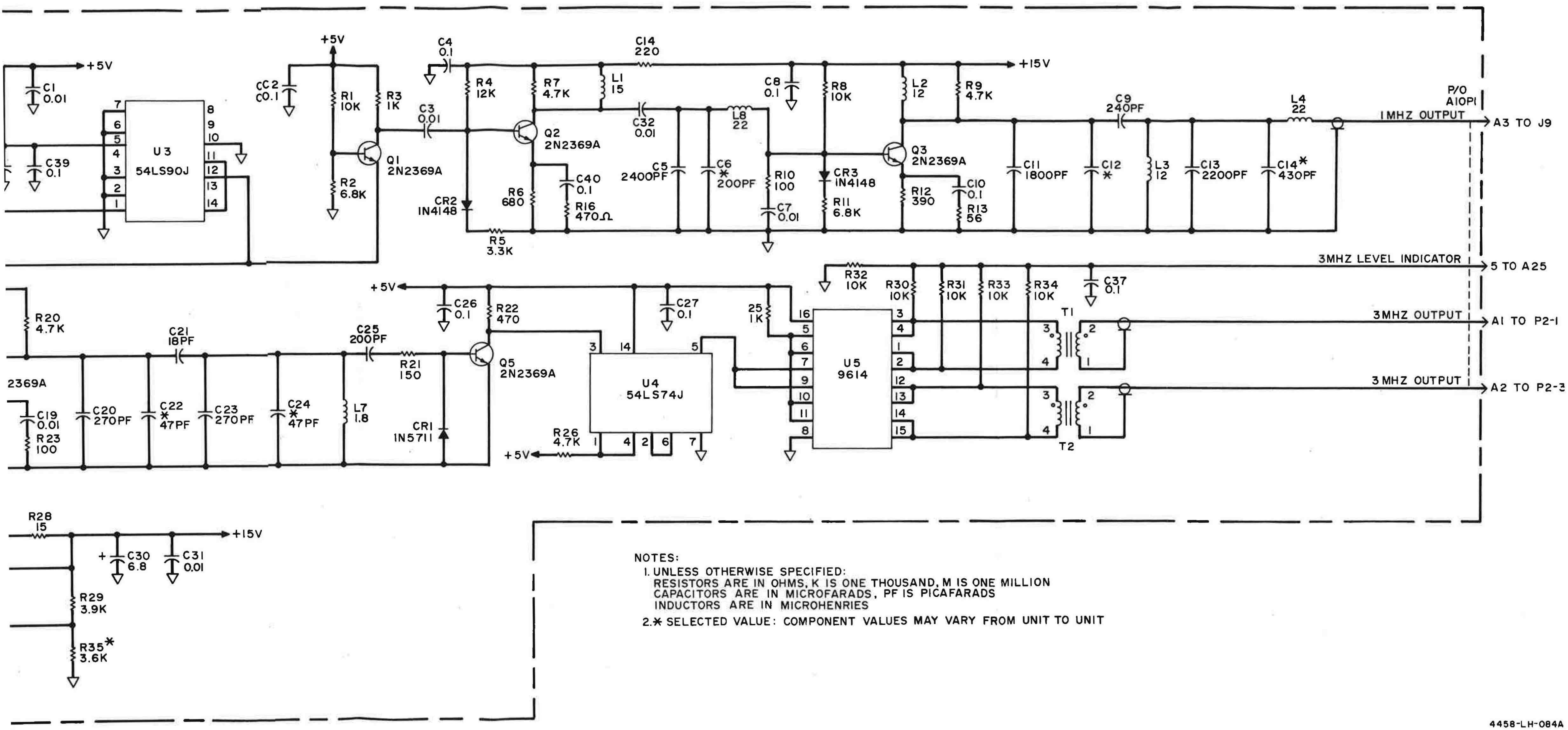

NOTES:

1. UNLESS OTHERWISE SPECIFIED:
   RESISTORS ARE IN OHMS, K IS ONE THOUSAND, M IS ONE MILLION
   CAPACITORS ARE IN MICROFARADS, PF IS PICAFARADS
   INDUCTORS ARE IN MICROHENRIES
2. * SELECTED VALUE: COMPONENT VALUES MAY VARY FROM UNIT TO UNIT

Figure 8-12. 3MHz and 1MHz Generator A10, Schematic Diagram

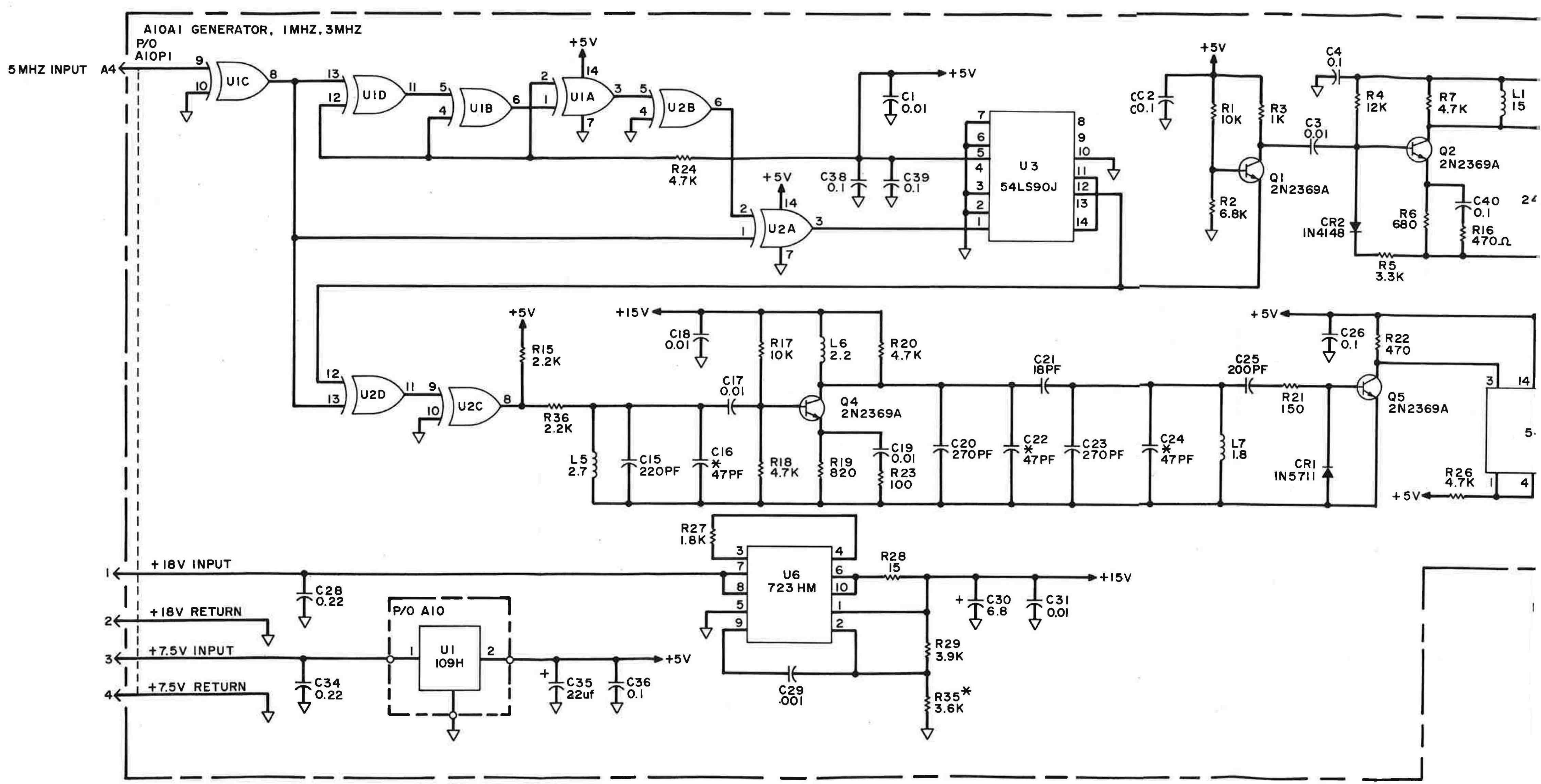
A10A1 GENERATOR, 1MHZ, 3MHZ
P/O A10P1
5MHZ INPUT A4
U1C
U1D
U1B
U1A
U2B
U2A
U2D
U2C
U3 54LS90J
+5V
R24 4.7K
C1 0.01
C38 0.1
C39 0.1
CC2 C0.1
R1 10K
R2 6.8K
R3 1K
Q1 2N2369A
C4 0.1
C3 0.01
R4 12K
R7 4.7K
L1 15
Q2 2N2369A
CR2 1N4148
R6 680
C40 0.1
R16 470Ω
R5 3.3K
+15V
R15 2.2K
R36 2.2K
C18 0.01
R17 10K
L6 2.2
R20 4.7K
C17 0.01
Q4 2N2369A
L5 2.7
C15 220PF
C16 * 47PF
R18 4.7K
R19 820
C19 0.01
R23 100
C20 270PF
C21 18PF
C22 * 47PF
C23 270PF
C24 * 47PF
L7 1.8
C25 200PF
R21 150
CR1 1N5711
C26 0.1
R22 470
Q5 2N2369A
R26 4.7K
R27 1.8K
U6 723 HM
R28 15
C30 6.8
C31 0.01
R29 3.9K
R35* 3.6K
C29 .001
+18V INPUT
+18V RETURN
+7.5V INPUT
+7.5V RETURN
C28 0.22
C34 0.22
P/O A10
U1 109H
C35 22uf
C36 0.1

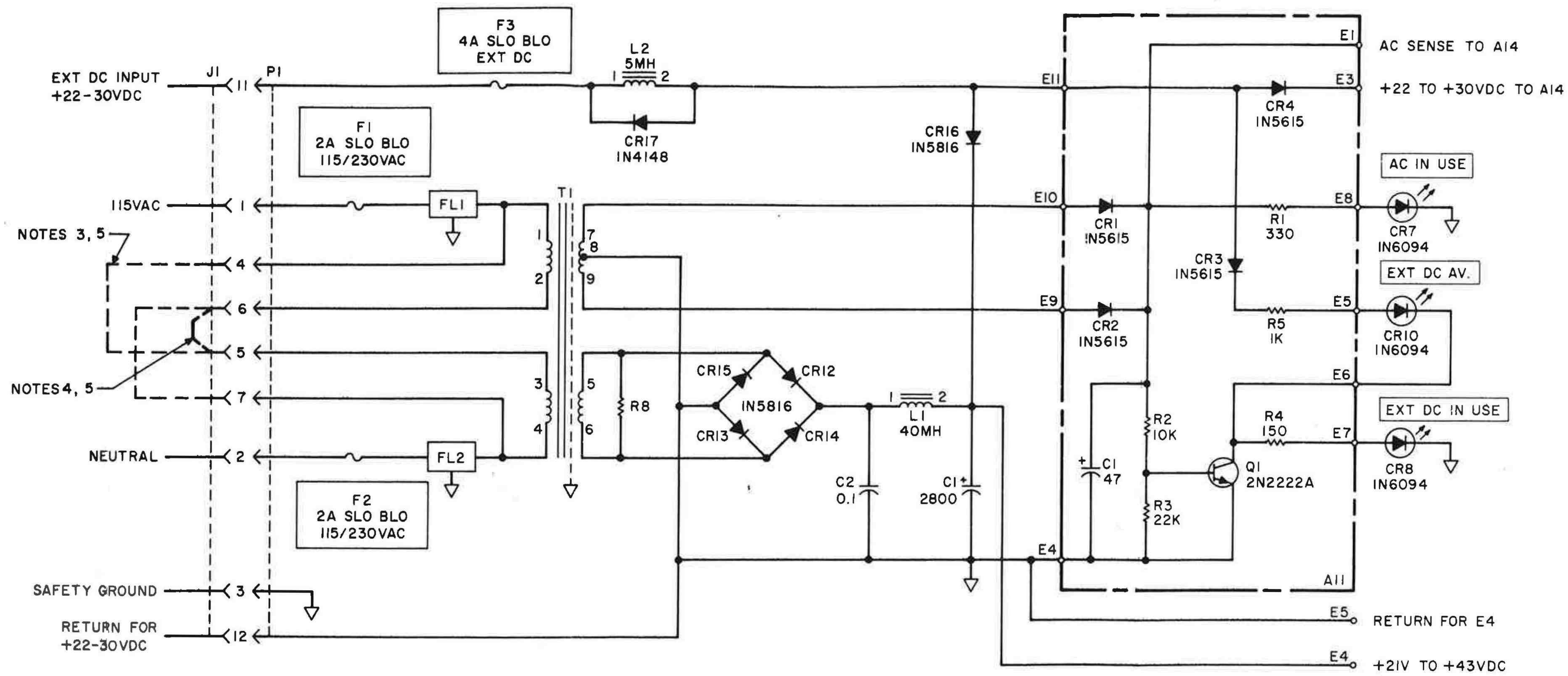

NOTES

1. UNLESS OTHERWISE SPECIFIED
   RESISTORS ARE IN OHMS
   K EQUALS ONE THOUSAND
   M EQUALS ONE MILLION
2. CAPACATORS ARE IN MICROFARADS
   PF EQUALS PICAFARADS
   INDUCTORS ARE IN MICROHENRIES
3. — — — JUMPER FOR 115V OPERATION
4. — — — JUMPER FOR 230V OPERATION
5. P1 SHALL BE WIRED SUCH THAT THE MATING CONNECTOR CAN PROVIDE 115V AC BY JUMPERING PINS 7 TO 6 AND 5 TO 4 ADDITIONALLY PINS 5 AND 6 CAN BE JUMPERED FOR 230 VAC

4458-LD-085B

Figure 8-13. Power Supply A11, Schematic Diagram

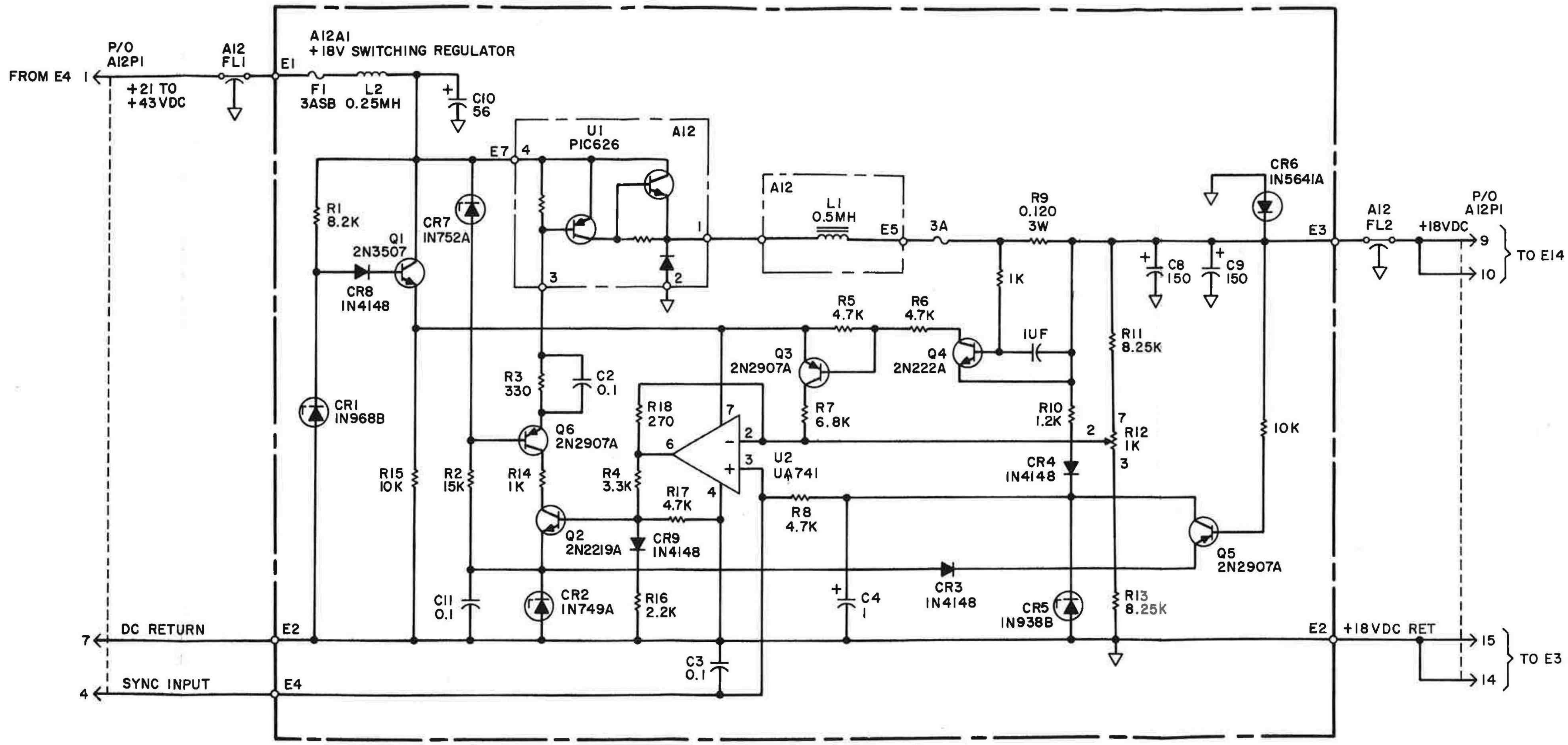

NOTES

1. UNLESS OTHERWISE SPECIFIED:
   RESISTORS ARE IN OHMS.
   K EQUALS ONE THOUSAND.
   M EQUALS ONE MILLION.
2. CAPACITORS ARE IN MICROFARADS.
   PF EQUALS PICAFARADS.
   INDUCTORS ARE IN MICROHENRIES.

4458-LD-086A

Figure 8-14. +18VDC Switching Regulator A12, Schematic Diagram

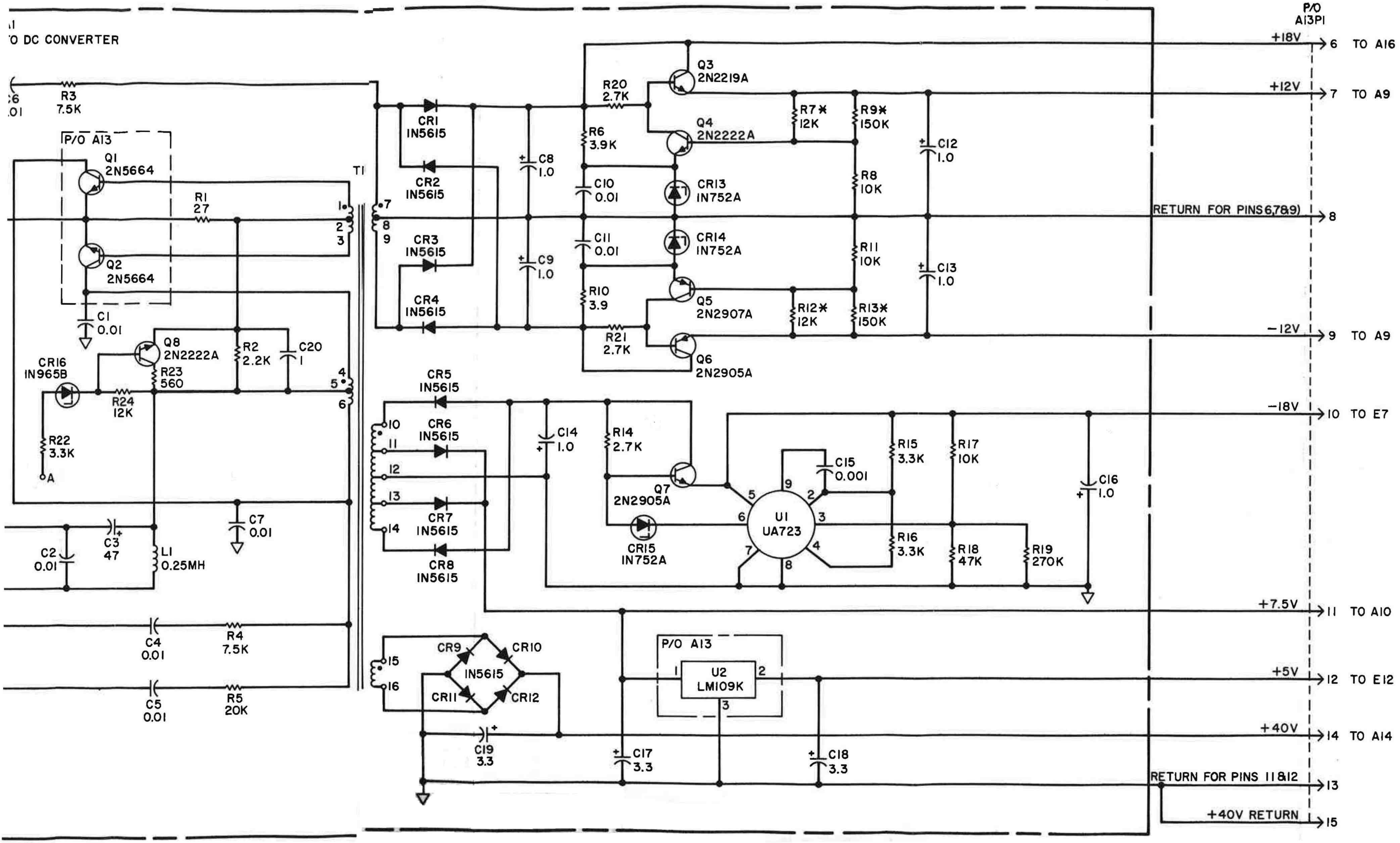

NOTES:
1. UNLESS OTHERWISE SPECIFIED: RESISTORS ARE IN OHMS. K IS ONE THOUSAND. M IS ONE MILLION.
2. CAPACITORS ARE IN MICROFARADS. PF IS PICAFARADS. INDUCTORS ARE IN MICROHENRIES.
3. * SELECTED VALUE: COMPONENT VALUES MAY VARY FROM UNIT TO UNIT.

Figure 8-15 . DC To DC Converter Schematic Diagram

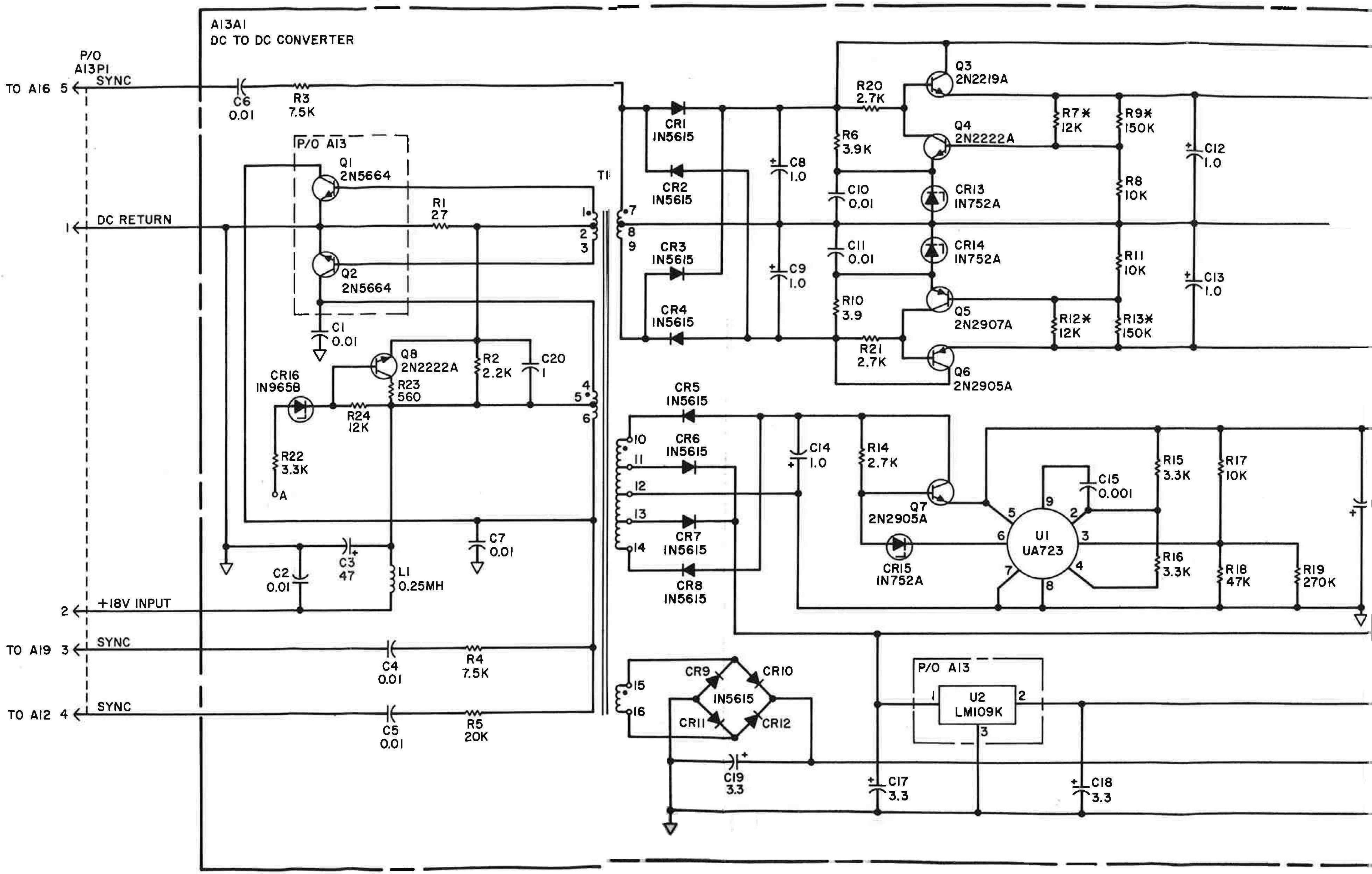

A13A1
DC TO DC CONVERTER
P/O
A13P1
TO A16 5
SYNC
1
DC RETURN
2
+18V INPUT
TO A19 3
SYNC
TO A12 4
SYNC
C6
0.01
R3
7.5K
P/O A13
Q1
2N5664
Q2
2N5664
R1
27
T1
C1
0.01
Q8
2N2222A
R2
2.2K
C20
1
CR16
IN965B
R23
560
R24
12K
R22
3.3K
A
C7
0.01
C2
0.01
C3
47
L1
0.25MH
C4
0.01
R4
7.5K
C5
0.01
R5
20K
CR1
IN5615
CR2
IN5615
CR3
IN5615
CR4
IN5615
C8
1.0
C9
1.0
R20
2.7K
R6
3.9K
C10
0.01
C11
0.01
R10
3.9
R21
2.7K
Q3
2N2219A
Q4
2N2222A
CR13
IN752A
CR14
IN752A
Q5
2N2907A
Q6
2N2905A
R7*
12K
R9*
150K
R8
10K
R11
10K
R12*
12K
R13*
150K
C12
1.0
C13
1.0
CR5
IN5615
CR6
IN5615
CR7
IN5615
CR8
IN5615
C14
1.0
R14
2.7K
Q7
2N2905A
CR15
IN752A
U1
UA723
C15
0.001
R15
3.3K
R17
10K
R16
3.3K
R18
47K
R19
270K
CR9
CR10
IN5615
CR11
CR12
C19
3.3
C17
3.3
P/O A13
U2
LM109K
C18
3.3

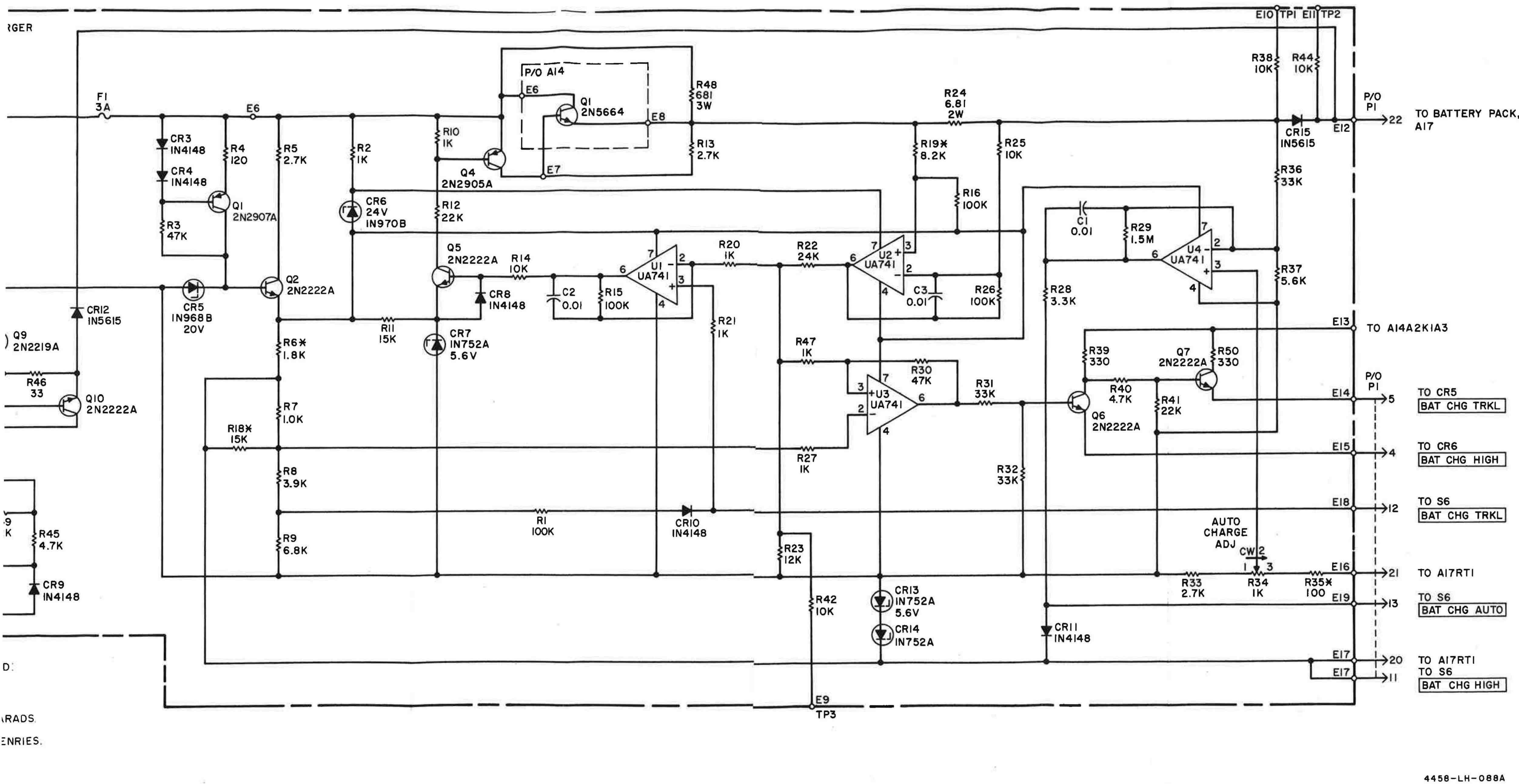

Figure 8-16. Battery Charger and Crossover A14, Schematic Diagram (Sheet 1 of 2)

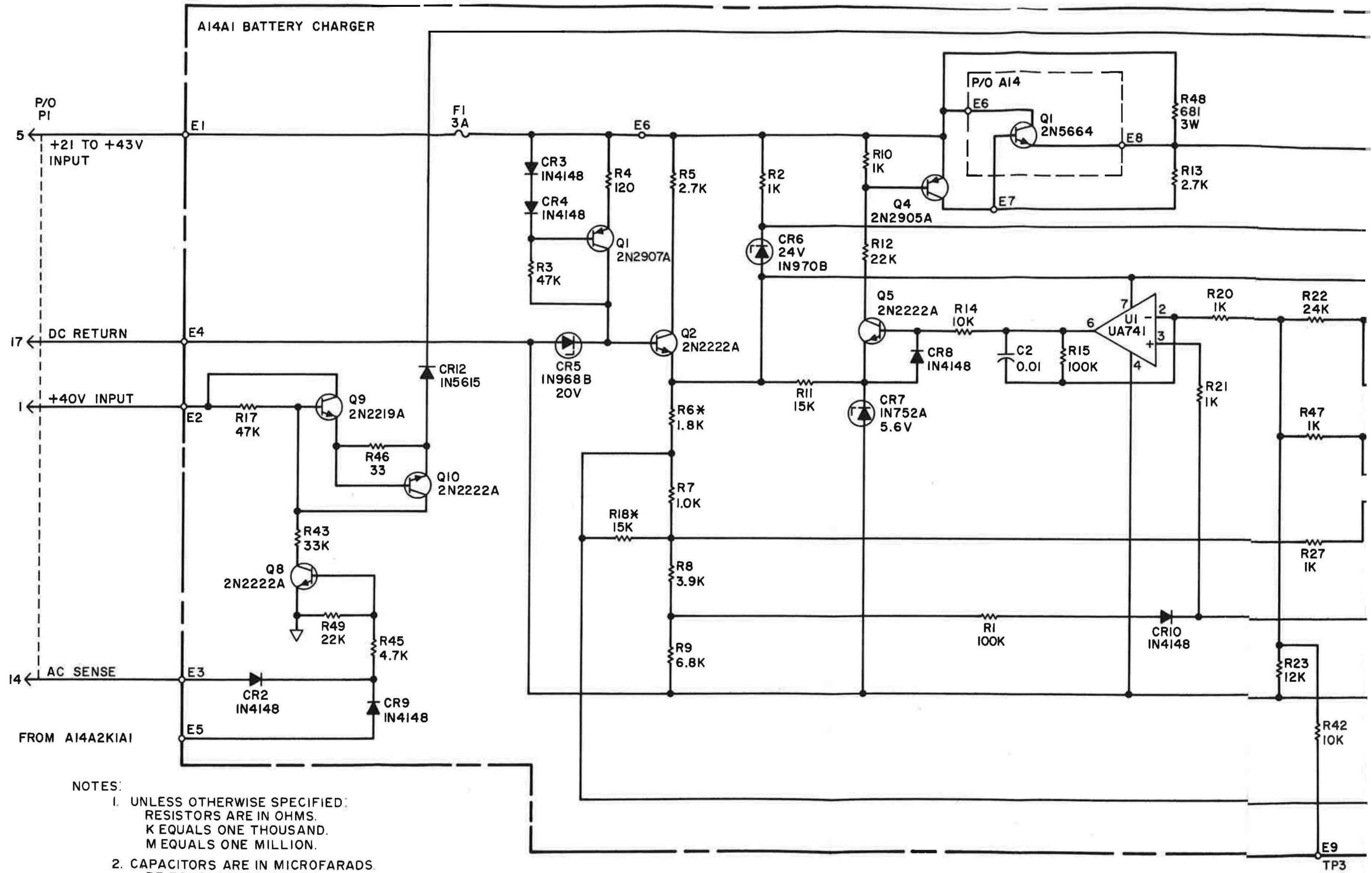

NOTES:
1. UNLESS OTHERWISE SPECIFIED:
   RESISTORS ARE IN OHMS.
   K EQUALS ONE THOUSAND.
   M EQUALS ONE MILLION.
2. CAPACITORS ARE IN MICROFARADS.
   PF EQUALS PICAFARADS.
   INDUCTORS ARE IN MICROHENRIES.
3. * EQUALS SELECTED VALUE

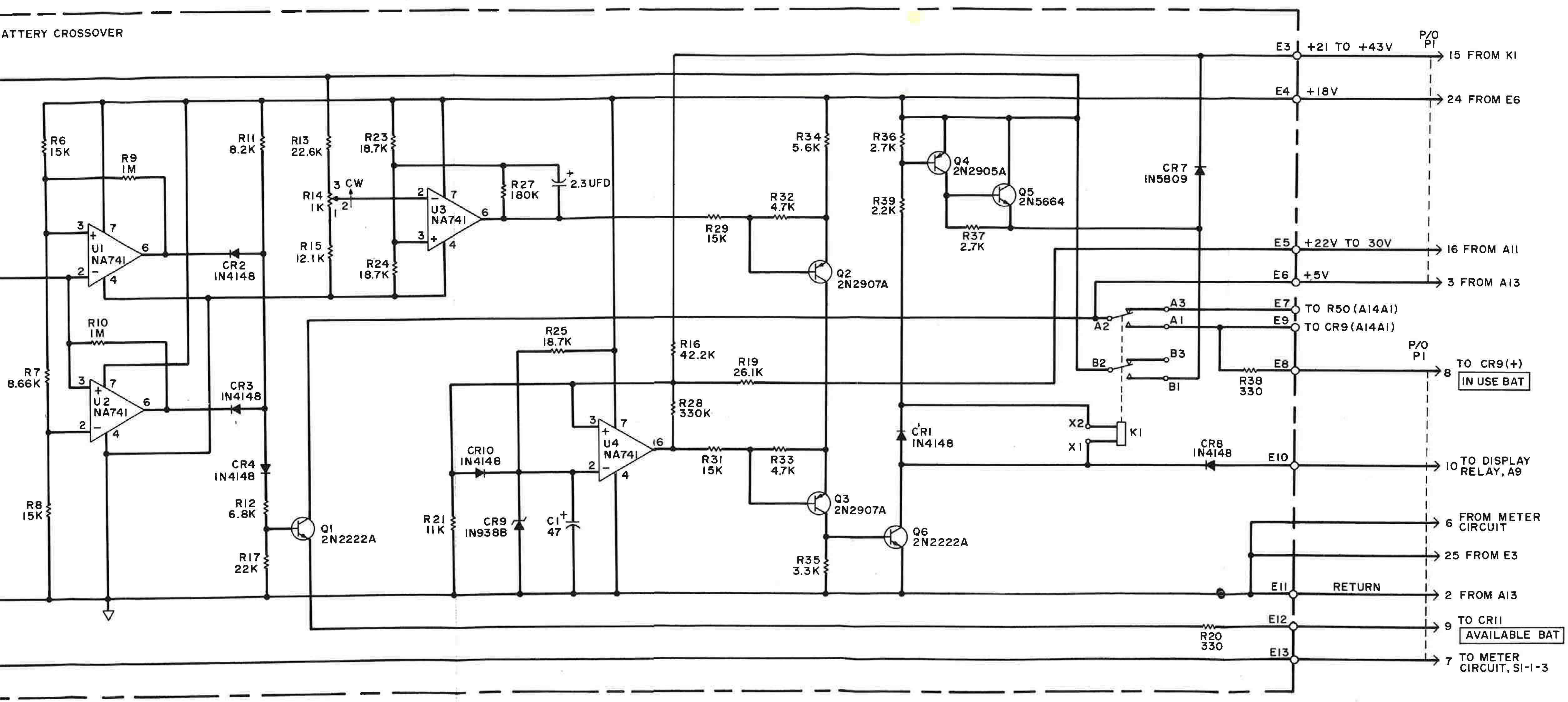

ES:
1. UNLESS OTHERWISE SPECIFIED:
   RESISTORS ARE IN OHMS
   K IS ONE THOUSAND
   M IS ONE MILLION
   CAPACITORS ARE IN MICROFARADS
   PFIS PICAFARADS
   INDUCTORS ARE IN MICROHENRIES
2. * = SELECTED VALUE:
   COMPONENT VALUES MAY VARY FROM UNIT TO UNIT

4458-LH-089A

Figure 8-16. Battery Charger and Crossover A14, Schematic Diagram (Sheet 2 of 2)

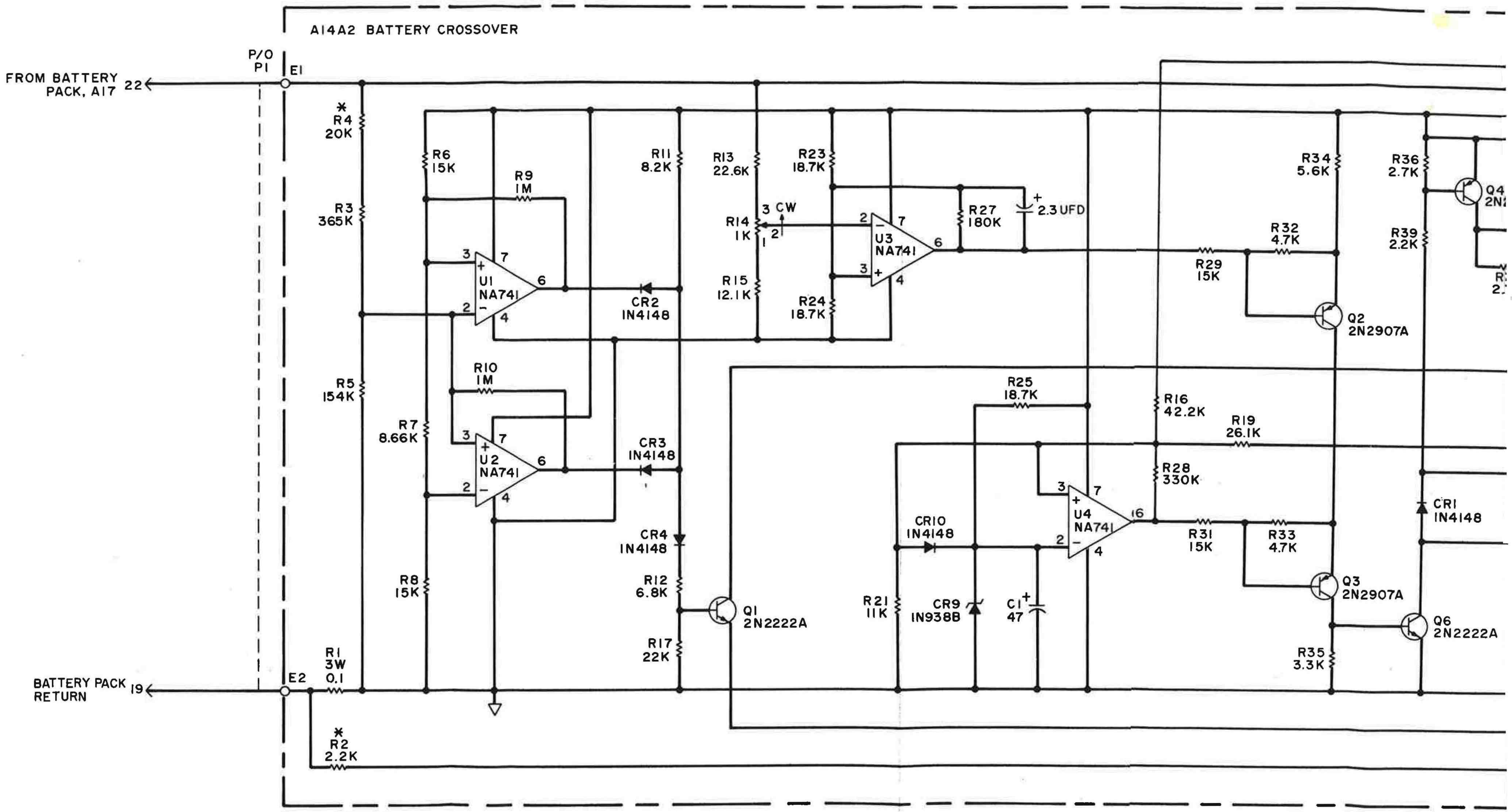

NOTES:

1. UNLESS OTHERWISE SPECIFIED:
   RESISTORS ARE IN OHMS
   K IS ONE THOUSAND
   M IS ONE MILLION
   CAPACITORS ARE IN MICROFARADS
   PFIS PICAFARADS
   INDUCTORS ARE IN MICROHENRIES
2. * = SELECTED VALUE:
   COMPONENT VALUES MAY VARY FROM UNIT TO UNIT

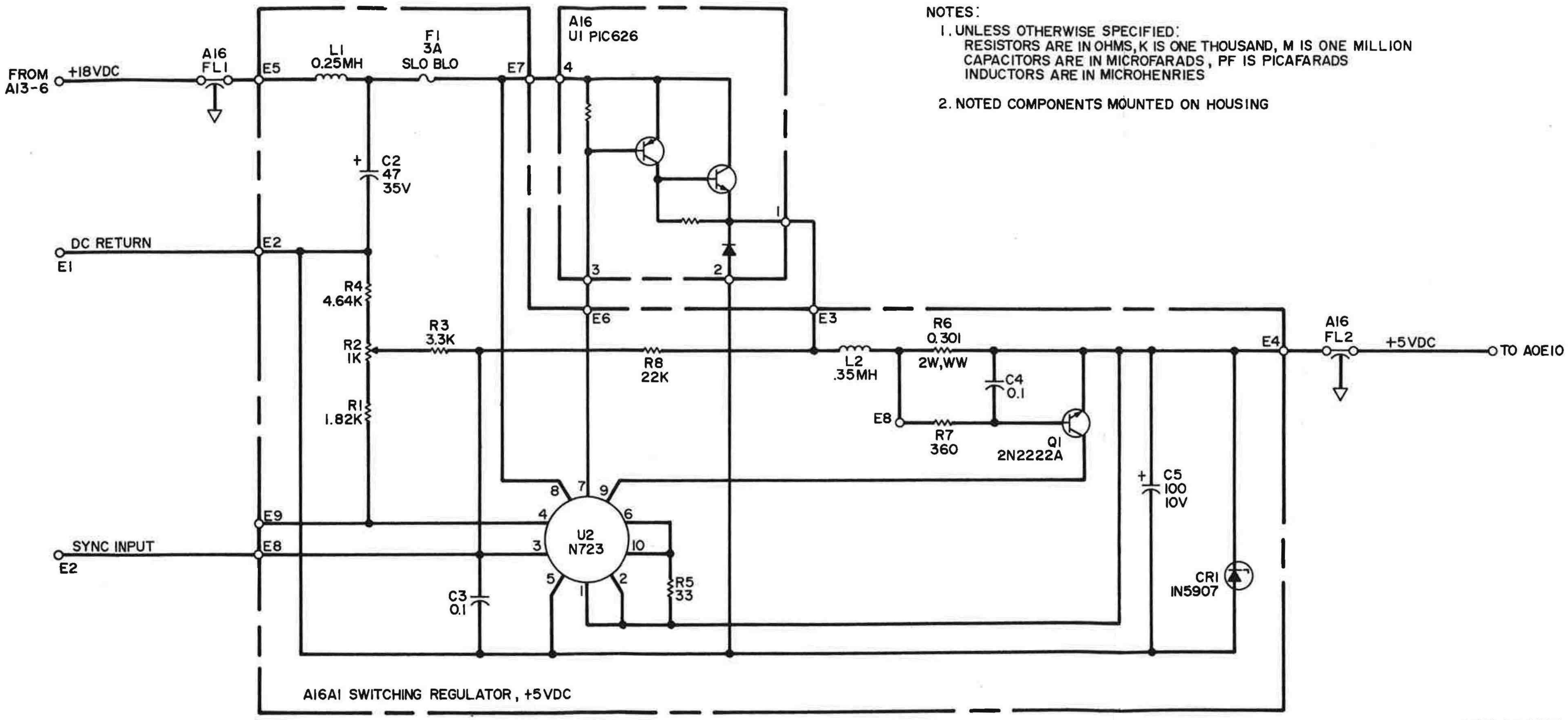

NOTES:
1. UNLESS OTHERWISE SPECIFIED:
RESISTORS ARE IN OHMS, K IS ONE THOUSAND, M IS ONE MILLION
CAPACITORS ARE IN MICROFARADS, PF IS PICAFARADS
INDUCTORS ARE IN MICROHENRIES
2. NOTED COMPONENTS MOUNTED ON HOUSING

4458-LD-090A

Figure 8-17. +5 VDC Switching Regulator A16, Schematic Diagram

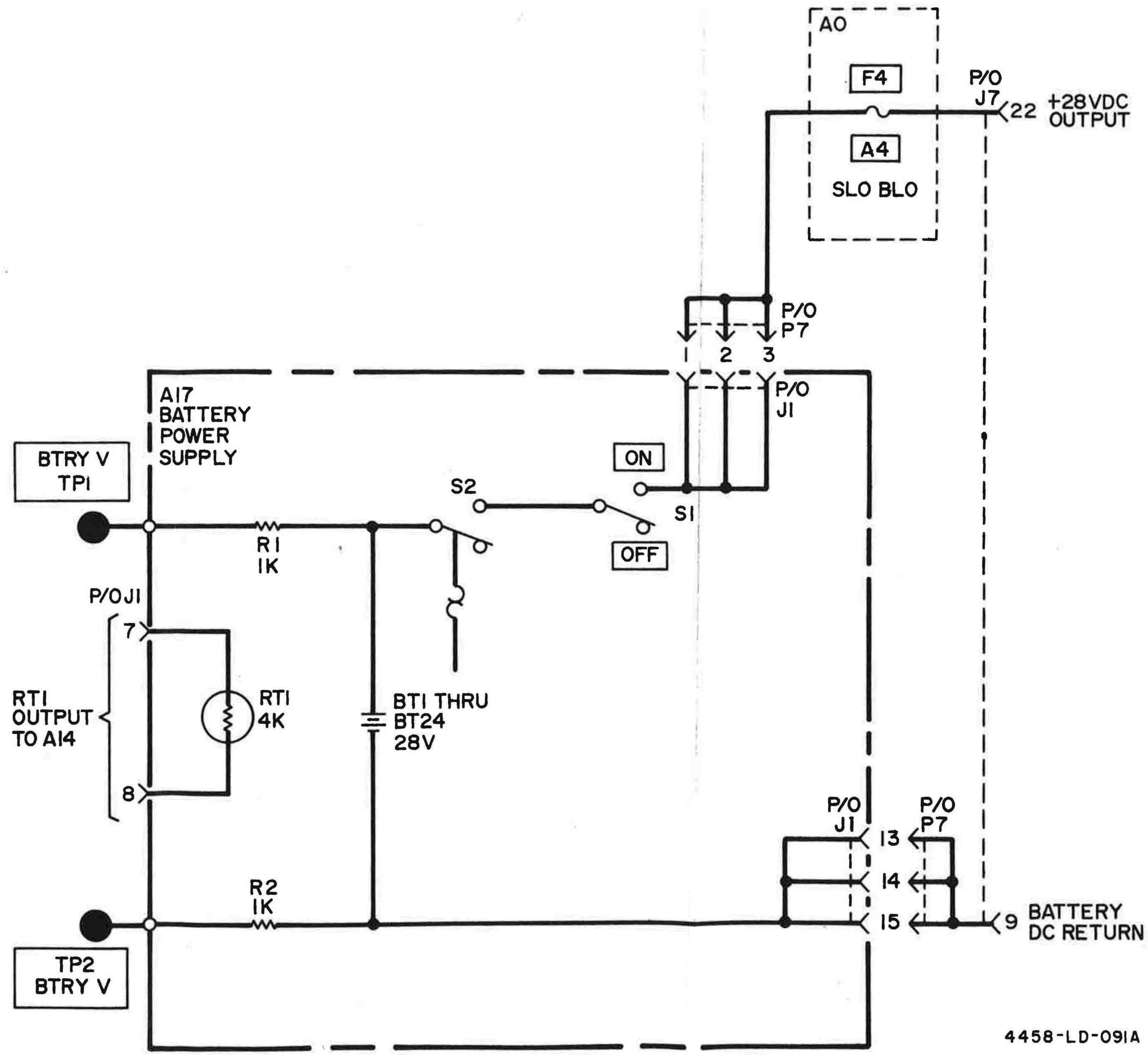

Figure 8-18. Battery Power Supply A17, Schematic Diagram

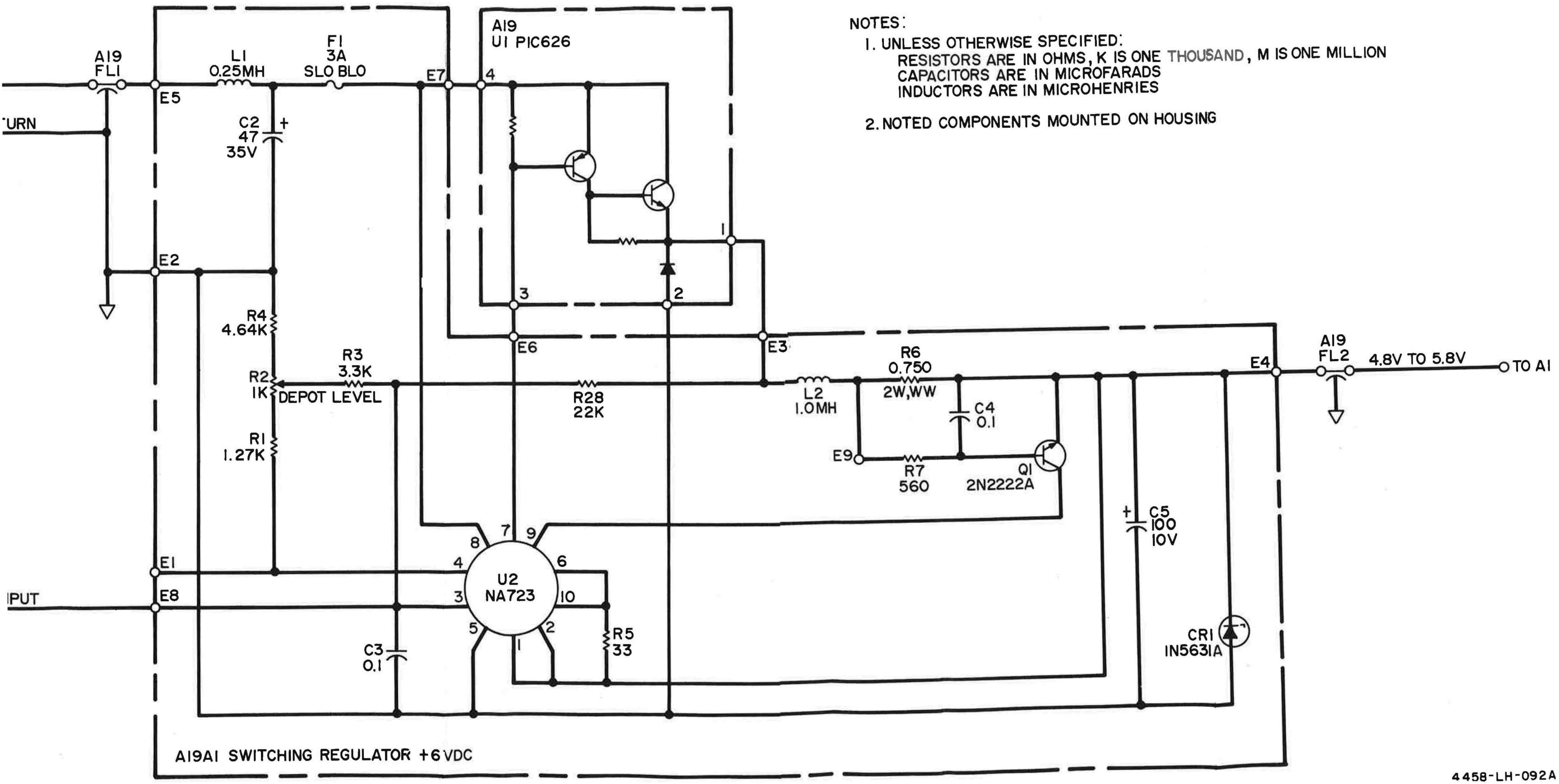

Figure 8-19. +6 VDC Switching Regulator A19, Schematic Diagram

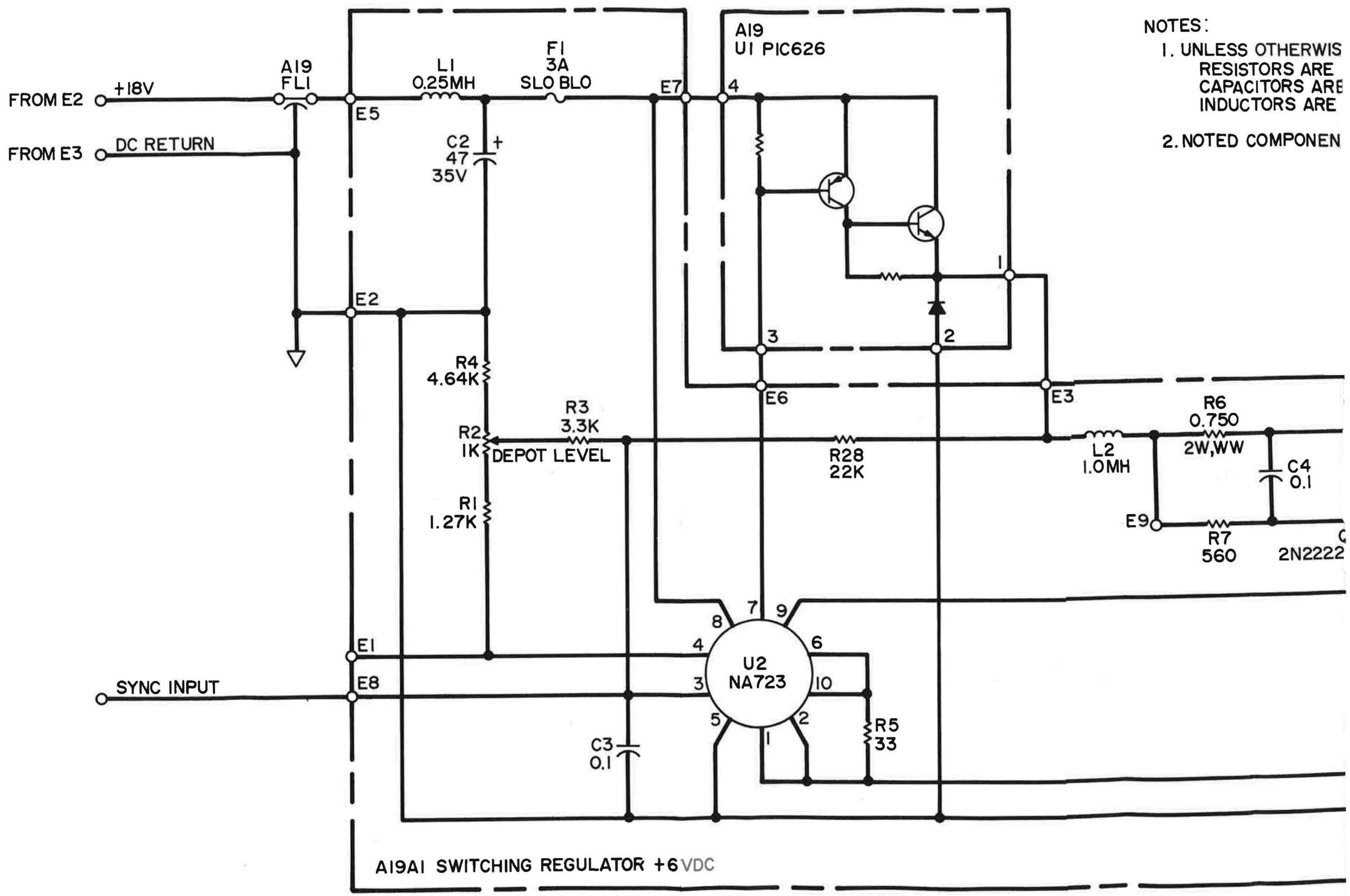

NOTES:
1. UNLESS OTHERWIS
RESISTORS ARE
CAPACITORS ARE
INDUCTORS ARE
2. NOTED COMPONEN

Figure 8

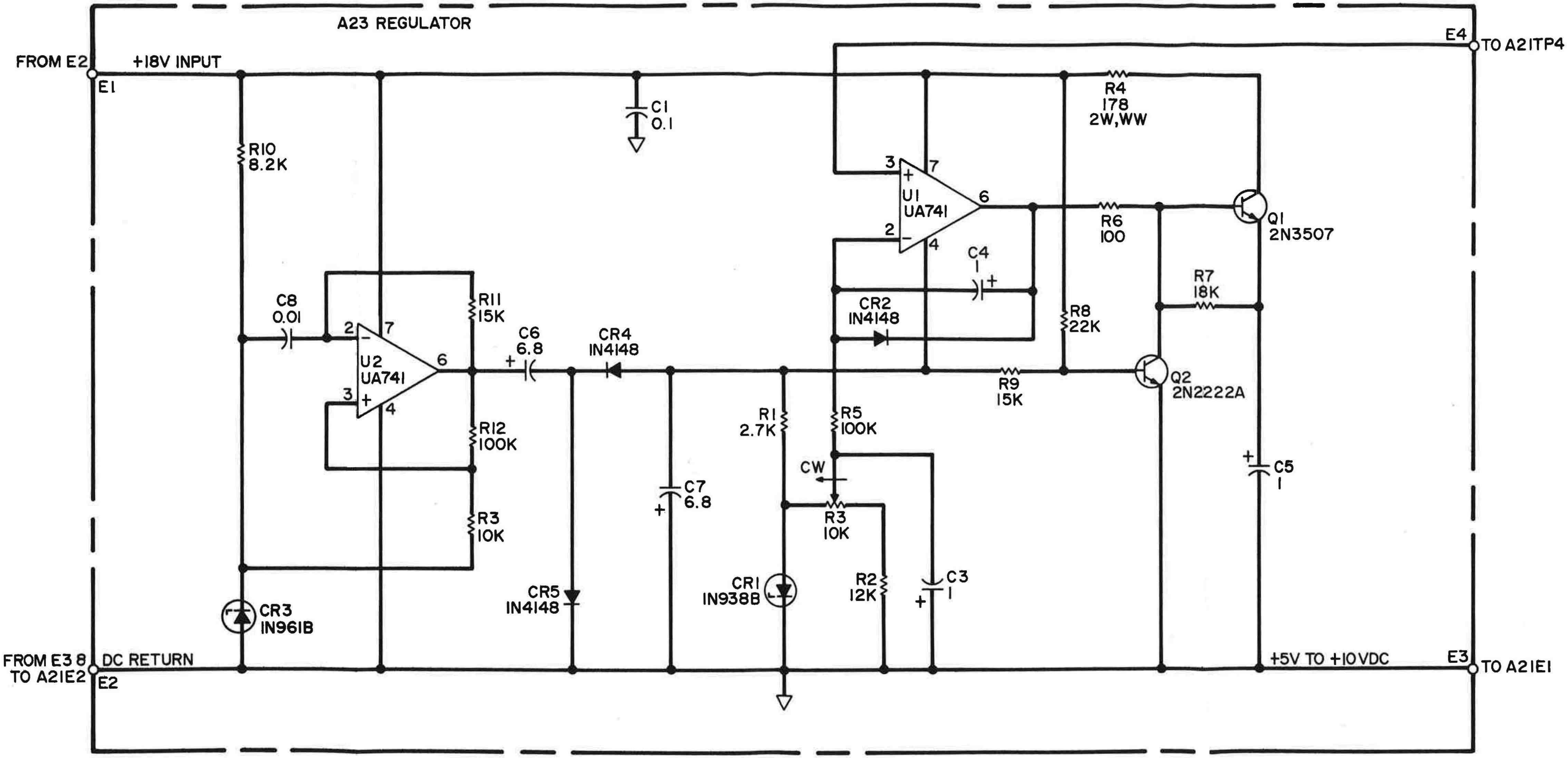

NOTES:

UNLESS OTHERWISE SPECIFIED:
RESISTORS ARE IN OHMS, K IS ONE THOUSAND, M IS ONE MILLION
CAPACITORS ARE IN MICROFARADS
INDICATORS ARE IN MICROHENRIES

4458-LD-093A

Figure 8-20. Electron Multiplier Regulator A23, Schematic Diagram

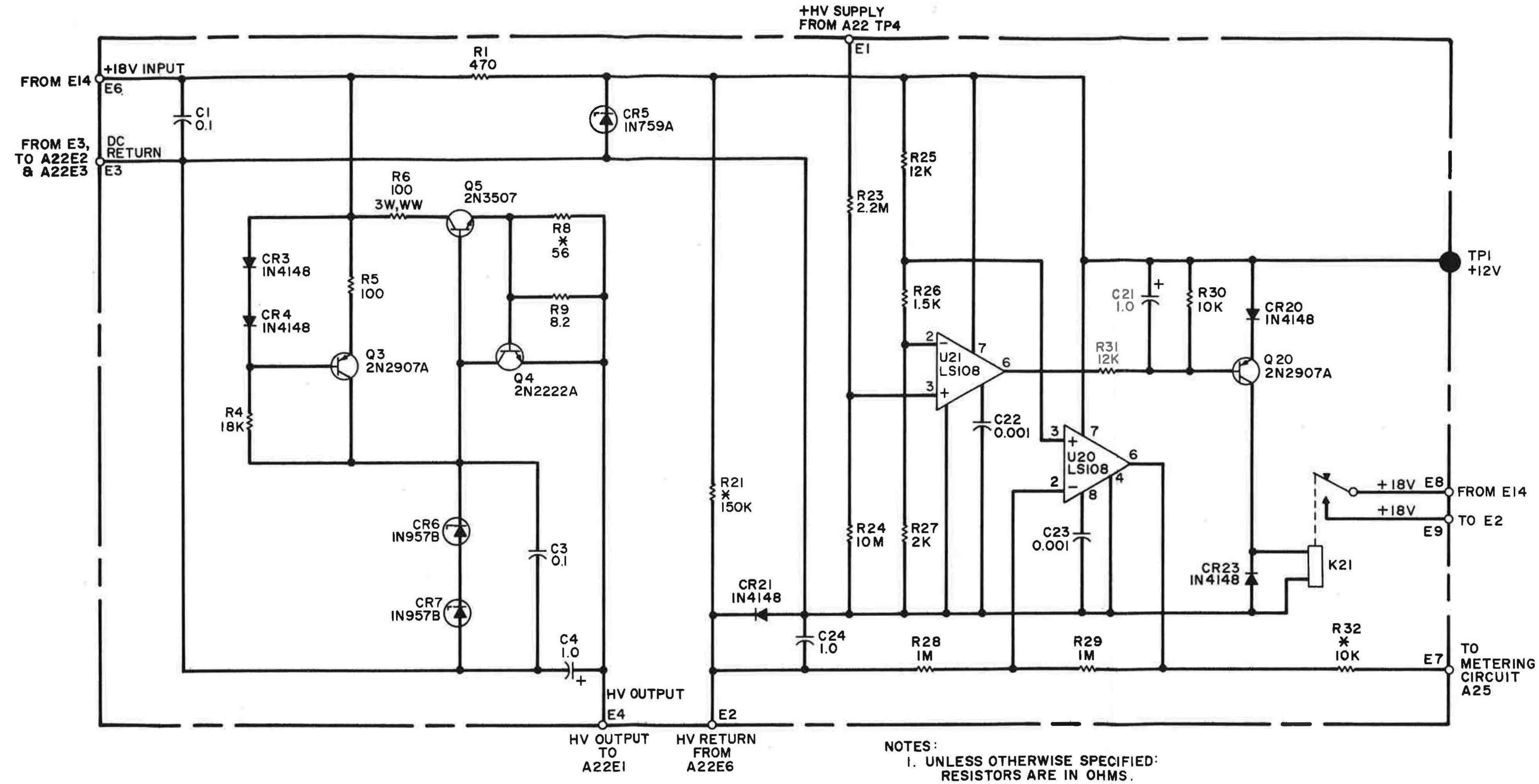

NOTES:
1. UNLESS OTHERWISE SPECIFIED:
   RESISTORS ARE IN OHMS.
   K EQUALS ONE THOUSAND.
   M EQUALS ONE MILLION.
   CAPACITORS ARE IN MICROFARADS.
   INDUCTORS ARE IN MICROHENRIES.
2. * EQUALS SELECTED VALUE:
   COMPONENT VALUES MAY VARY
   FROM UNIT TO UNIT.

4458-LH-094A

Figure 8-21. VAC-ION Regulator and Interlock A24, Schematic Diagram

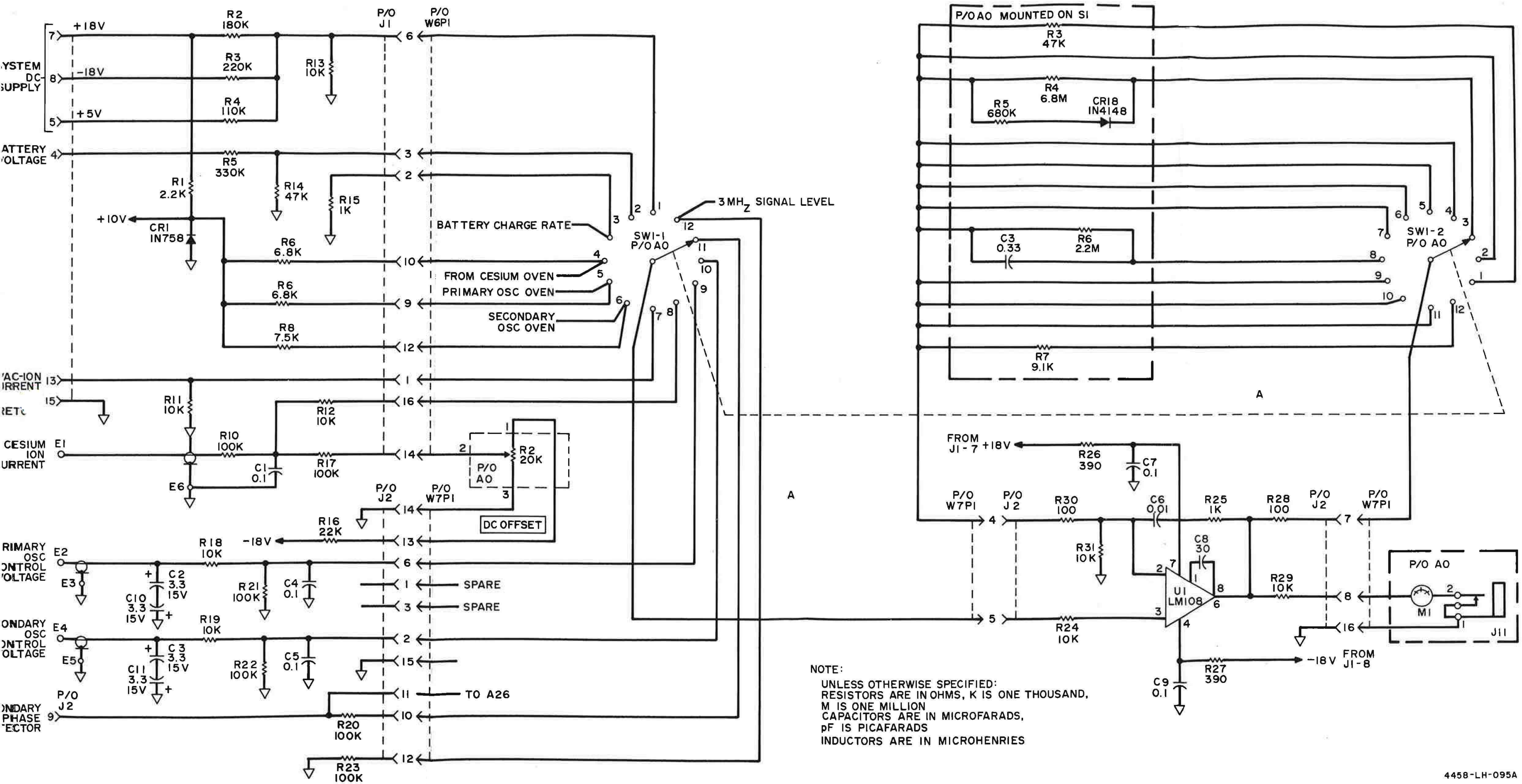

Figure 8-22. Meter Driver Amplifier A25, Schematic Diagram

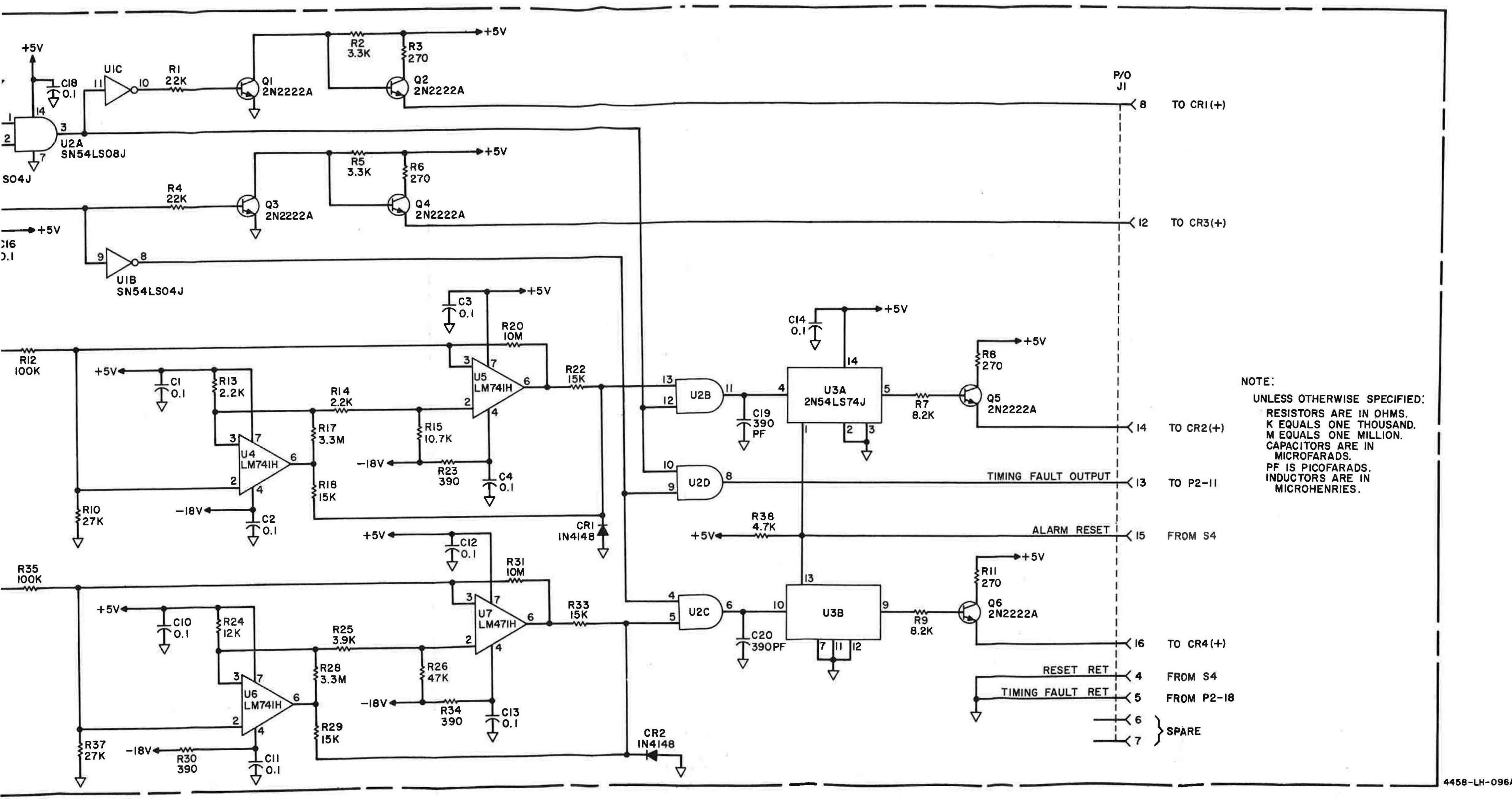

Figure 8-23. Alarms Logic A26, Schematic Diagram

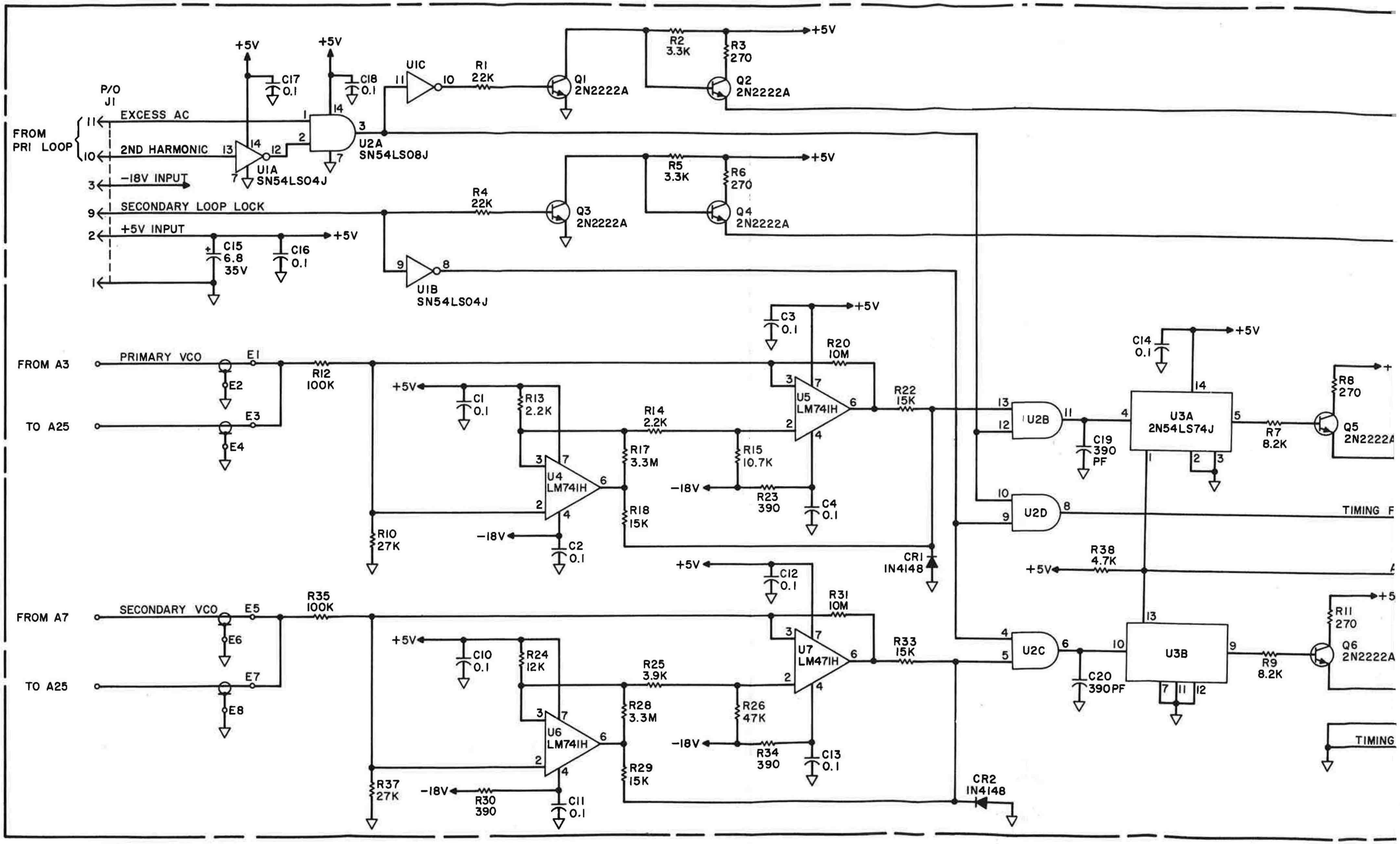

P/O J1
FROM PRI LOOP
EXCESS AC
2ND HARMONIC
-18V INPUT
SECONDARY LOOP LOCK
+5V INPUT
+5V
C17 0.1
C18 0.1
U1C
R1 22K
Q1 2N2222A
R2 3.3K
R3 270
Q2 2N2222A
U1A SN54LS04J
U2A SN54LS08J
R4 22K
Q3 2N2222A
R5 3.3K
R6 270
Q4 2N2222A
C15 6.8 35V
C16 0.1
U1B SN54LS04J
FROM A3
PRIMARY VCO
TO A25
E1
E2
E3
E4
R12 100K
C3 0.1
R20 10M
U5 LM741H
R22 15K
C1 0.1
R13 2.2K
R14 2.2K
U4 LM741H
R17 3.3M
R15 10.7K
R23 390
C4 0.1
R18 15K
R10 27K
-18V
C2 0.1
CR1 IN4148
C14 0.1
U2B
C19 390 PF
U3A 2N54LS74J
R8 270
R7 8.2K
Q5 2N2222A
U2D
TIMING F
R38 4.7K
FROM A7
SECONDARY VCO
E5
E6
E7
E8
R35 100K
C12 0.1
R31 10M
U7 LM471H
R33 15K
C10 0.1
R24 12K
R25 3.9K
U6 LM741H
R28 3.3M
R26 47K
R34 390
C13 0.1
R29 15K
R37 27K
R30 390
C11 0.1
CR2 IN4148
U2C
C20 390PF
U3B
R9 8.2K
R11 270
Q6 2N2222A
TIMING

Figure

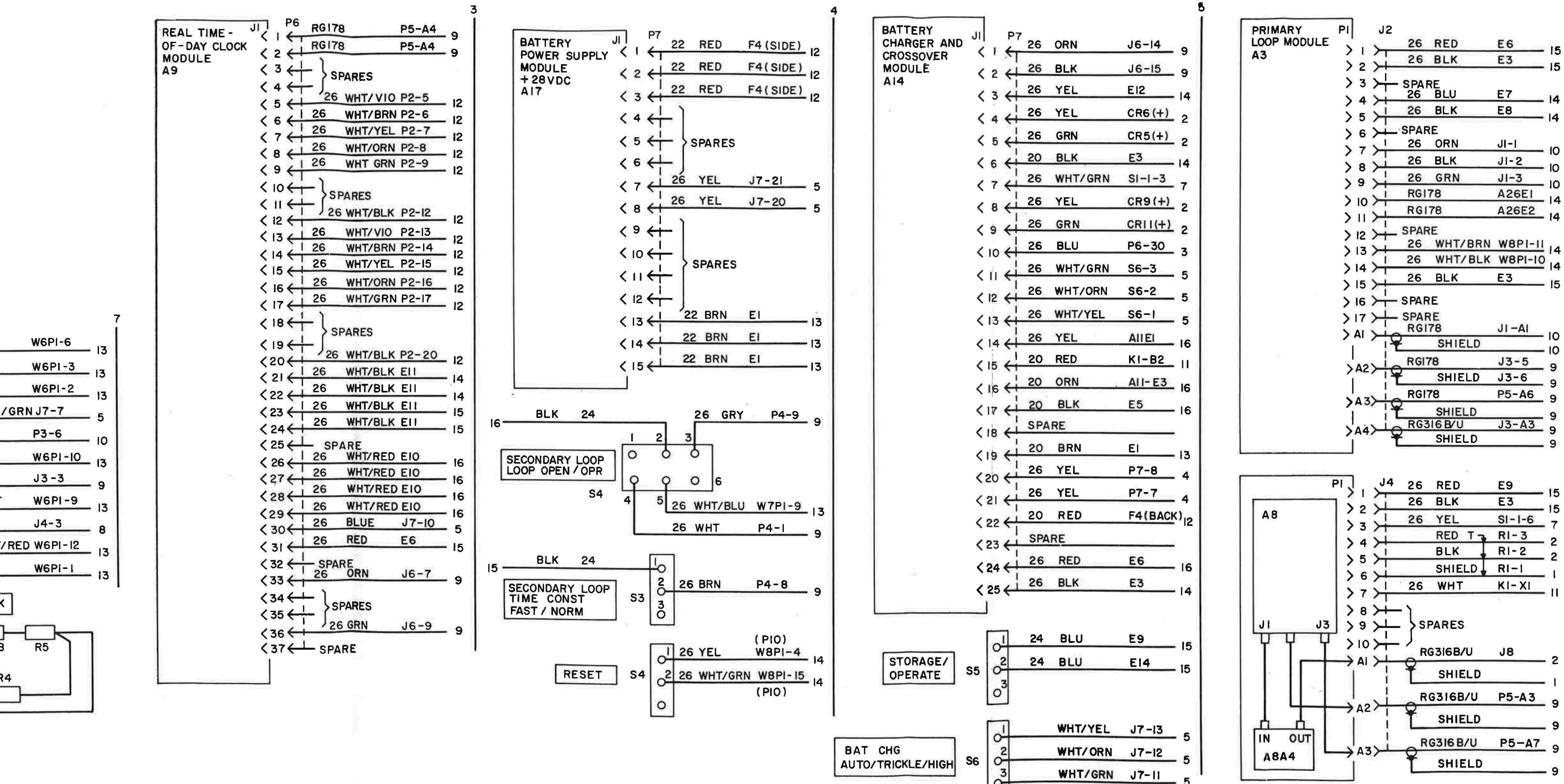

4458-LH-097A

Figure 8-24. MRC Wiring Diagram (Sheet 1 of 3)

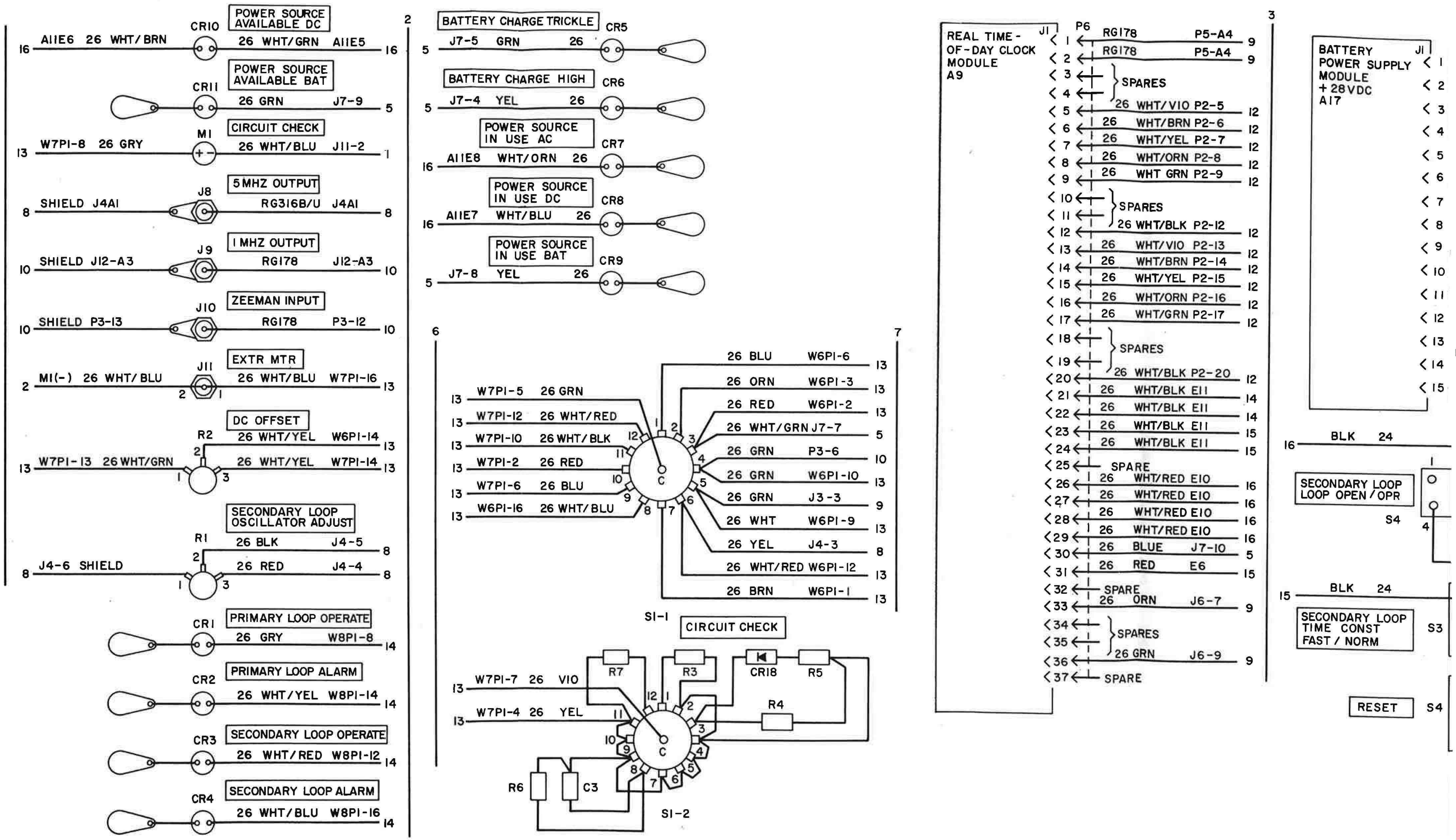
POWER SOURCE AVAILABLE DC
CR10
A11E6 26 WHT/BRN
26 WHT/GRN A11E5
POWER SOURCE AVAILABLE BAT
CR11
26 GRN J7-9
CIRCUIT CHECK
M1
W7P1-8 26 GRY
26 WHT/BLU J11-2
5 MHZ OUTPUT
J8
SHIELD J4A1
RG316B/U J4A1
1 MHZ OUTPUT
J9
SHIELD J12-A3
RG178 J12-A3
ZEEMAN INPUT
J10
SHIELD P3-13
RG178 P3-12
EXTR MTR
J11
M1(-) 26 WHT/BLU
26 WHT/BLU W7P1-16
DC OFFSET
R2
26 WHT/YEL W6P1-14
W7P1-13 26 WHT/GRN
26 WHT/YEL W7P1-14
SECONDARY LOOP OSCILLATOR ADJUST
R1
26 BLK J4-5
J4-6 SHIELD
26 RED J4-4
PRIMARY LOOP OPERATE
CR1
26 GRY W8P1-8
PRIMARY LOOP ALARM
CR2
26 WHT/YEL W8P1-14
SECONDARY LOOP OPERATE
CR3
26 WHT/RED W8P1-12
SECONDARY LOOP ALARM
CR4
26 WHT/BLU W8P1-16
BATTERY CHARGE TRICKLE
CR5
J7-5 GRN 26
BATTERY CHARGE HIGH
CR6
J7-4 YEL 26
POWER SOURCE IN USE AC
CR7
A11E8 WHT/ORN 26
POWER SOURCE IN USE DC
CR8
A11E7 WHT/BLU 26
POWER SOURCE IN USE BAT
CR9
J7-8 YEL 26
W7P1-5 26 GRN
W7P1-12 26 WHT/RED
W7P1-10 26 WHT/BLK
W7P1-2 26 RED
W7P1-6 26 BLU
W6P1-16 26 WHT/BLU
26 BLU W6P1-6
26 ORN W6P1-3
26 RED W6P1-2
26 WHT/GRN J7-7
26 GRN P3-6
26 GRN W6P1-10
26 GRN J3-3
26 WHT W6P1-9
26 YEL J4-3
26 WHT/RED W6P1-12
26 BRN W6P1-1
S1-1
CIRCUIT CHECK
W7P1-7 26 VIO
W7P1-4 26 YEL
R7
R3
CR18
R5
R4
R6
C3
S1-2
REAL TIME-OF-DAY CLOCK MODULE A9
J1
P6
RG178 P5-A4
RG178 P5-A4
SPARES
26 WHT/VIO P2-5
26 WHT/BRN P2-6
26 WHT/YEL P2-7
26 WHT/ORN P2-8
26 WHT GRN P2-9
SPARES
26 WHT/BLK P2-12
26 WHT/VIO P2-13
26 WHT/BRN P2-14
26 WHT/YEL P2-15
26 WHT/ORN P2-16
26 WHT/GRN P2-17
SPARES
26 WHT/BLK P2-20
26 WHT/BLK E11
26 WHT/BLK E11
26 WHT/BLK E11
26 WHT/BLK E11
SPARE
26 WHT/RED E10
26 WHT/RED E10
26 WHT/RED E10
26 WHT/RED E10
26 BLUE J7-10
26 RED E6
SPARE
26 ORN J6-7
SPARES
26 GRN J6-9
SPARE
BATTERY POWER SUPPLY MODULE +28VDC A17
J1
BLK 24
SECONDARY LOOP LOOP OPEN/OPR
S4
BLK 24
SECONDARY LOOP TIME CONST FAST/NORM
S3
RESET
S4

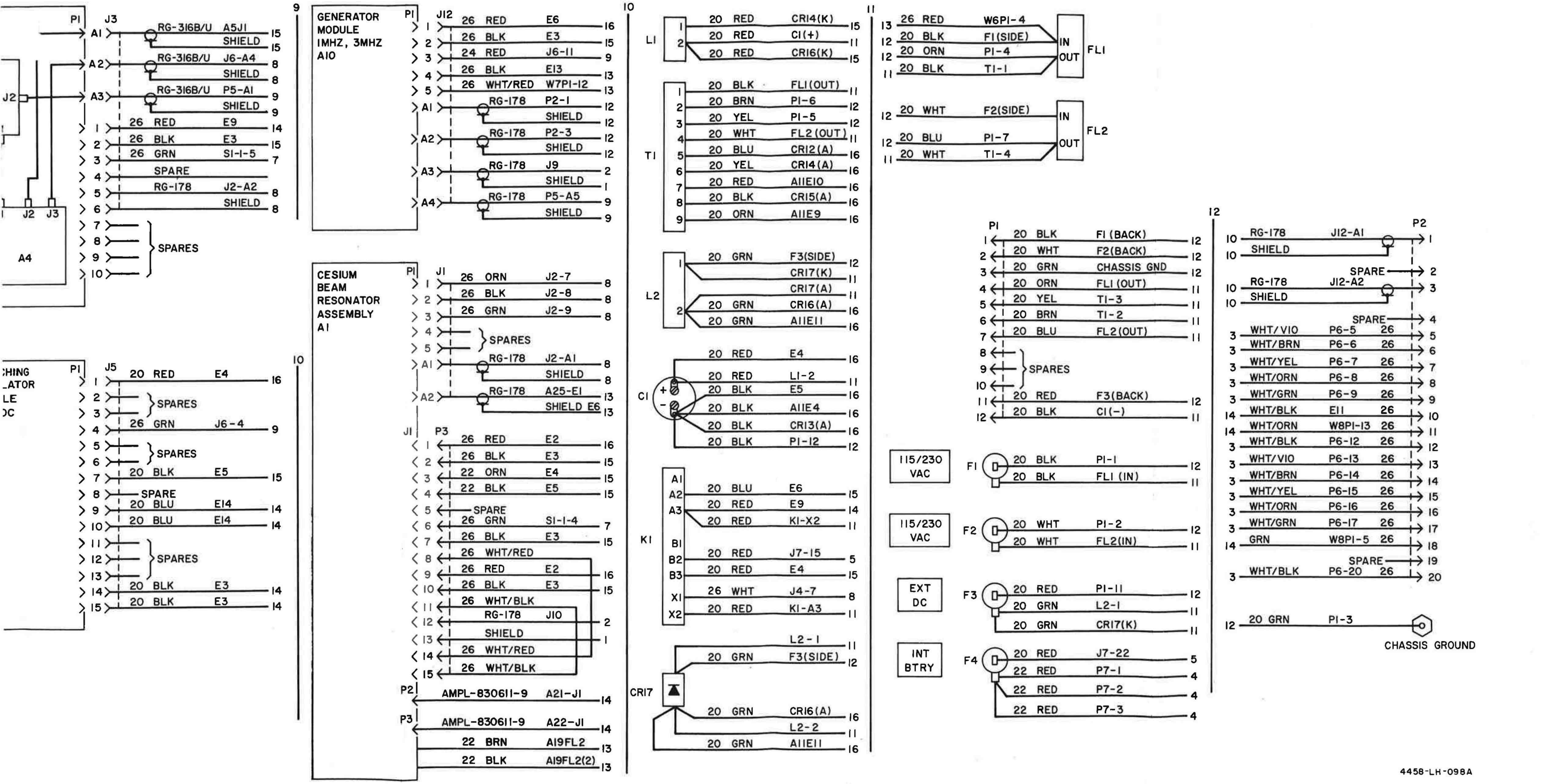

Figure 8-24. MRC Wiring Diagram (Sheet 2 of 3)

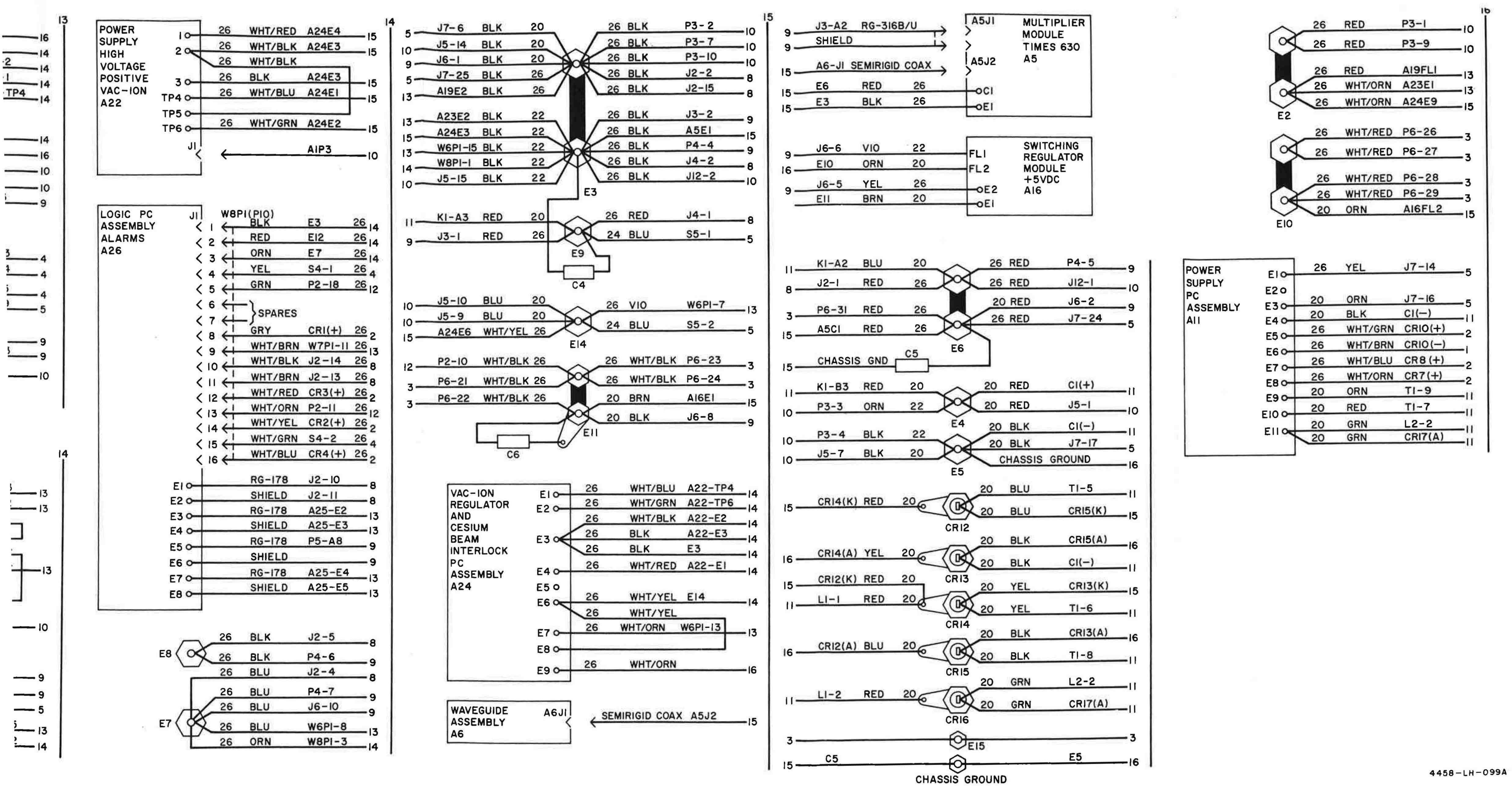

Figure 8-24. MRC Wiring Diagram (Sheet 3 of 3)

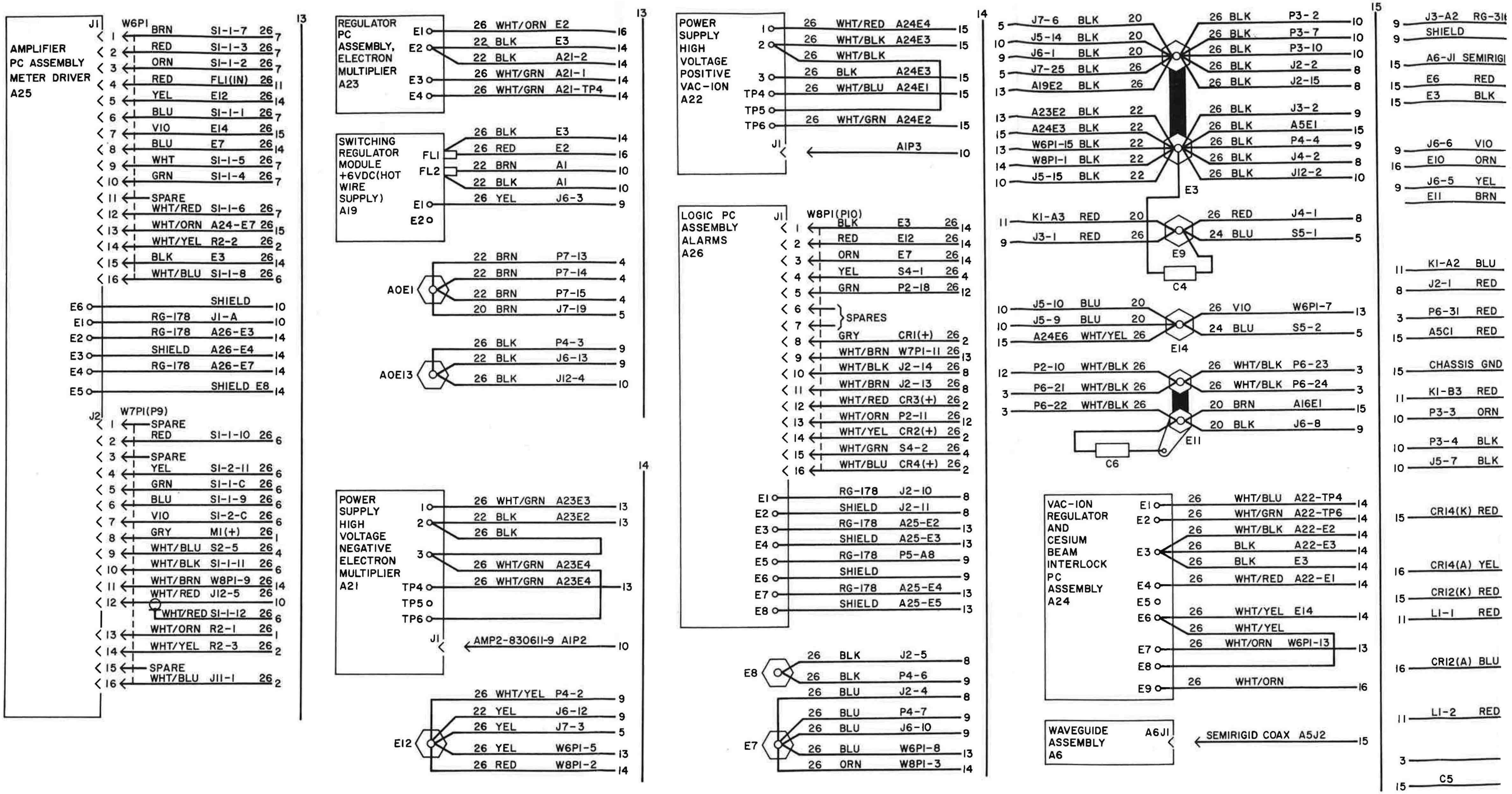
AMPLIFIER PC ASSEMBLY METER DRIVER A25
J1
W6P1
BRN SI-1-7 26
RED SI-1-3 26
ORN SI-1-2 26
RED FL1(IN) 26
YEL E12 26
BLU SI-1-1 26
VIO E14 26
BLU E7 26
WHT SI-1-5 26
GRN SI-1-4 26
SPARE
WHT/RED SI-1-6 26
WHT/ORN A24-E7 26
WHT/YEL R2-2 26
BLK E3 26
WHT/BLU SI-1-8 26
E6 SHIELD
E1 RG-178 J1-A
E2 RG-178 A26-E3
E3 SHIELD A26-E4
E4 RG-178 A26-E7
E5 SHIELD E8
J2 W7P1(P9)
SPARE
RED SI-1-10 26
SPARE
YEL SI-2-11 26
GRN SI-1-C 26
BLU SI-1-9 26
VIO SI-2-C 26
GRY M1(+) 26
WHT/BLU S2-5 26
WHT/BLK SI-1-11 26
WHT/BRN W8P1-9 26
WHT/RED J12-5 26
WHT/RED SI-1-12 26
WHT/ORN R2-1 26
WHT/YEL R2-3 26
SPARE
WHT/BLU J11-1 26
REGULATOR PC ASSEMBLY, ELECTRON MULTIPLIER A23
26 WHT/ORN E2
22 BLK E3
22 BLK A21-2
26 WHT/GRN A21-1
26 WHT/GRN A21-TP4
SWITCHING REGULATOR MODULE +6VDC(HOT WIRE SUPPLY) A19
26 BLK E3
26 RED E2
22 BRN A1
22 BLK A1
26 YEL J6-3
A0E1
22 BRN P7-13
22 BRN P7-14
22 BRN P7-15
20 BRN J7-19
A0E13
26 BLK P4-3
22 BLK J6-13
26 BLK J12-4
POWER SUPPLY HIGH VOLTAGE NEGATIVE ELECTRON MULTIPLIER A21
26 WHT/GRN A23E3
22 BLK A23E2
26 BLK
26 WHT/GRN A23E4
26 WHT/GRN A23E4
AMP2-830611-9 A1P2
E12
26 WHT/YEL P4-2
22 YEL J6-12
26 YEL J7-3
26 YEL W6P1-5
26 RED W8P1-2
POWER SUPPLY HIGH VOLTAGE POSITIVE VAC-ION A22
26 WHT/RED A24E4
26 WHT/BLK A24E3
26 WHT/BLK
26 BLK A24E3
26 WHT/BLU A24E1
26 WHT/GRN A24E2
A1P3
LOGIC PC ASSEMBLY ALARMS A26
W8P1(P10)
BLK E3 26
RED E12 26
ORN E7 26
YEL S4-1 26
GRN P2-18 26
SPARES
GRY CR1(+) 26
WHT/BRN W7P1-11 26
WHT/BLK J2-14 26
WHT/BRN J2-13 26
WHT/RED CR3(+) 26
WHT/ORN P2-11 26
WHT/YEL CR2(+) 26
WHT/GRN S4-2 26
WHT/BLU CR4(+) 26
RG-178 J2-10
SHIELD J2-11
RG-178 A25-E2
SHIELD A25-E3
RG-178 P5-A8
SHIELD
RG-178 A25-E4
SHIELD A25-E5
E8
26 BLK J2-5
26 BLK P4-6
26 BLU J2-4
E7
26 BLU P4-7
26 BLU J6-10
26 BLU W6P1-8
26 ORN W8P1-3
J7-6 BLK 20
J5-14 BLK 20
J6-1 BLK 20
J7-25 BLK 26
A19E2 BLK 26
26 BLK P3-2
26 BLK P3-7
26 BLK P3-10
26 BLK J2-2
26 BLK J2-15
A23E2 BLK 22
A24E3 BLK 22
W6P1-15 BLK 22
W8P1-1 BLK 22
J5-15 BLK 22
26 BLK J3-2
26 BLK A5E1
26 BLK P4-4
26 BLK J4-2
26 BLK J12-2
E3
K1-A3 RED 20
J3-1 RED 26
26 RED J4-1
24 BLU S5-1
E9
C4
J5-10 BLU 20
J5-9 BLU 20
A24E6 WHT/YEL 26
26 VIO W6P1-7
24 BLU S5-2
E14
P2-10 WHT/BLK 26
P6-21 WHT/BLK 26
P6-22 WHT/BLK 26
26 WHT/BLK P6-23
26 WHT/BLK P6-24
20 BRN A16E1
20 BLK J6-8
E11
C6
VAC-ION REGULATOR AND CESIUM BEAM INTERLOCK PC ASSEMBLY A24
26 WHT/BLU A22-TP4
26 WHT/GRN A22-TP6
26 WHT/BLK A22-E2
26 BLK A22-E3
26 BLK E3
26 WHT/RED A22-E1
26 WHT/YEL E14
26 WHT/YEL
26 WHT/ORN W6P1-13
26 WHT/ORN
WAVEGUIDE ASSEMBLY A6
A6J1
SEMIRIGID COAX A5J2
J3-A2 RG-316
SHIELD
A6-J1 SEMIRIGID
E6 RED
E3 BLK
J6-6 VIO
E10 ORN
J6-5 YEL
E11 BRN
K1-A2 BLU
J2-1 RED
P6-31 RED
A5C1 RED
CHASSIS GND
K1-B3 RED
P3-3 ORN
P3-4 BLK
J5-7 BLK
CR14(K) RED
CR14(A) YEL
CR12(K) RED
L1-1 RED
CR12(A) BLU
L1-2 RED
C5

Table 8-1. MRC Wire Run List

From	To	Wire	Notes
		A1	
A1 (+)	A19-FL2	#22 BRN	HOT WIRE
A1 (-)	A19-FL2 (GND)	#22 BLK	HOT WIRE RET
A1-P2	A21-J1	NOTE 14 WHT	NEGATIVE HV
A1-P3	A22-J1	NOTE 14 WHT	POSITIVE HV
		A5	
A5-C1	E6	#26 RED	+ 18 Vdc
A5-E1	E3	#26 BLK	GND
A5-J1	J3-A2	RG-316B/U	14.59 MHz INP
A5-J1 (SHLD)	J3-A2 (SHLD)	NOTE 8	14.59 MHz INP (RET)
A5-J2	A6-J1	OSM SEMIRIGID	9.1 GHz OUT
		A6	
A6-J1	A5-J2	OSM SEMIRIGID	9.1 GHz INP
		A11	
A11-E1	J7-14	#26 YEL	A14-BATTERY CHARGER
A11-E2	SPARE		
A11-E3	J7-16	#20 ORN	A14-BATTERY CHARGER
A11-E4	C1 (-)	#20 BLK	GND
A11-E5	CR10 (+)	#26 WHT/GRN	EXT. DC AVAILABLE-LED
A11-E6	CR10 (-)	#26 WHT/BRN	EXT. DC AVAIL. LED-RET
A11-E7	CR8 (+)	#26 WHT/BLU	EXT. DC IN USE-LED
A11-E8	CR7 (+)	#26 WHT/ORN	AC IN USE-LED
A11-E9	T1-9	#20 ORN	
A11-E10	T1-7	#20 RED	
A11-E11	L2-2	#20 GRN	
		A16	
A16-E1	E11	#20 BRN	RET (FLOATING)
A16-E2	J6-5	#26 YEL	A13; SYNC
A16-FL1	J6-6	#22 VIO	A13; + 17V INP
A16-FL2	E10	#20 ORN	+ 5V (FLOATING)

Table 8-1. MRC Wire Run List-Continued

From	To	Wire	Notes
		A19	
A19-E1	SPARE		
A19-E2	J6-3	#26 YEL	A13; SYNC
A19-FL1	E2	#26 RED	+ 18V DC
A19-FL1 (GND)	E3	#26 BLK	GND
A19-FL2	A1 (+)	#22 BRN	HOT WIRE
A19-FL2 (GND)	A1 (-)	#22 BLK	HOT WIRE (RET)
		A21	
A21-1	A23-E3	#26 WHT/GRN	INP VOLTAGE
A21-2	A23-E2	#22 BLK	GND
A21-2	A21-3	#26 BLK	GND
A21-3	A21-2	#26 BLK	GND
A21-3	A21-6	#26 BLK	GND
A21-4	A23-E4	#26 WHT/GRN	260/1 TEST PT.
A21-5	SPARE		
A21-6	A21-3	#26 BLK	GND
A21-J1	A1-P2		NEGATIVE HV.
		A22	
A22-1	A24-E4	#26 WHT/RED	INP. VOLTAGE
A22-2	A24-E3	#26 WHT/BLK	GND
A22-2	A22-5	#26 WHT/BLK	GND
A22-3	A24-E3	#26 BLK	CASE GND
A22-4	A24-E1	#26 WHT/BLU	1000/1 T.P.
A22-5	A22-2	#26 WHT/BLK	GND
A22-6	A24-E2	#26 WHT/GRN	OUT RET
A22-J1	A1-P3		POSITIVE H.V.
		A23	
A23-E1	E2	#26 WHT/ORN	+ 18V FROM VAC-ION INTLK
A23-E2	E3	#22 BLK	GND

Table 8-1. MRC Wire Run List-Continued

From	To	Wire	Notes
		A23-continued	
A23-E2	A21-2	#22 BLK	GND
A23-E3	A21-1	#26 WHT/GRN	OUT VOLTAGE
A23-E4	A21-4	#26 WHT/GRN	260/1 DIVIDER
		A24	
A24-E1	A22-4	#26 WHT/BLU	1000/1 T.P.
A24-E2	A22-6	#26 WHT/GRN	OUT RET
A24-E3	A22-2	#26 WHT/BLK	GND
A24-E3	A22-3	#26 BLK	CASE GND
A24-E3	E3	#26 BLK	GND
A24-E4	A22-1	#26 WHT/RED	OUT VOLTAGE
A24-E5	SPARE		
A24-E6	E14	#26 WHT/YEL	+ 18 VDC
A24-E6	A24-E8	#26 WHT/YEL	+ 18 VDC
A24-E7	P8-13	#26 WHT/ORN	VAC-ION INP
A24-E8	A24-E6	#26 WHT/YEL	+ 18 VDC
A24-E9	E2	#26 WHT/ORN	+ 18 VDC
		A25	
A25-E1	J1-A2	RG-178/U	CES ION METERING
A25-E2	A26-E3	RG-178/U	PRI OSC. CONTR. V.
A25-E3	A26-E4 (SHLD)	NOTE 8	RET PRI. OSC. CONTR. V.
A25-E4	A26-E7	RG-178/U	SEC. OSC. CONT
A25-E5	A26-E8 (SHLD)	NOTE 8	RET. SEC OSC. CONT
A25-E6	J1-A2 (SHLD)	NOTE 8	RET CES ION MET.
		A26	
A26-E1	J2-10	RG-178/U	PRI. VCO A3
A26-E2	J2-11 (SHLD)	NOTE 8	RET. PRI. VCO A3
A26-E3	A25-E2	RG-178/U	PRI. VCO TO A25
A26-E4	A25-E3 (SHLD)	NOTE 8	RET. PRI. VCO TO A25
A26-E5	P5-A8	RG-178/U	SEC. VCO TO A7
A26-E6	P5-A8 (SHLD)	NOTE 8	RET. SEC VCO TO A7

Table 8-1. MRC Wire Run List-Continued

From	To	Wire	Notes
		A26-continued	
A26-E7	A25-E4	RG-178/U	SEC. VCO TO A25
A26-E8	A25-E5 (SHLD)	NOTE 8	RET SEC VCO TO A25
		C1	
C1 (+)	E4	#20 RED	+ DC
C1 (+)	L1-2	#20 RED	+ DC
C1 (-)	E5	#20 BLK	GND
C1 (-)	A11-E4	#20 BLK	GND
C1 (-)	CR13 (+)	#20 BLK	GND
C1 (-)	P1-12	#20 BLK	GND
		C2	
C2	CR13 (+)		
C2	CR14 (-)		
		C3	
C3	S1-2-8		
C3	S1-2-9		
		C4	
C4	E9		
C4	E3		
		C5	
C5	E6		
C5	CHAS GND LUG		
		C6	
C6	E11		
C6	CHAS GND LUG		
		CR1	
CR1 (+)	P10-8	#26 GRY	A26; PRI LOOP OPERATE
CR1 (-)	CHAS GND LUG		

Table 8-1. MRC Wire Run List-Continued

From	To	Wire	Notes
		CR2	
CR2 (+)	P10-14	#26 WHT/YEL	A26; PRI LOOP ALARM
CR2 (-)	CHAS GND LUG		
		CR3	
CR3 (+)	P10-12	#26 WHT/RED	A26; SEC. LOOP OPERATE
CR3 (-)	CHAS GND LUG		
		CR4	
CR4 (+)	P10-16	#26 WHT/BLU	A26; SEC. LOOP ALARM
CR4 (-)	CHAS GND LUG		
		CR5	
CR5 (+)	J7-5	#26 GRN	A14; BAT. TRIKLE
CR5 (-)	CHAS GND LUG		
		CR6	
CR6 (+)	J7-4	#26 YEL	A14 BAT HIGH CHARGE
CR6 (-)	CHAS GND LUG		
		CR7	
CR7 (+)	A11-E8	#26 WHT/ORN	AC PWR SOURCE IN USE
CR7 (-)	CHAS GND LUG		
		CR8	
CR8 (+)	A11-E7	#26 WHT/BLU	DC PWR SOURCE IN USE
CR8 (-)	CHAS GND LUG		
		CR9	
CR9 (+)	J7-8	#26 YEL	A14 BAT PWR SCE IN USE
CR9 (-)	CHAS GND LUG		
		CR10	
CR10 (+)	A11-E5	#26 WHT/GRN	DC POWER SCE AVAILABLE
CR10 (-)	A11-E6	#26 WHT/BRN	RET DC PWR SCE AVAIL.

Table 8-1. MRC Wire Run List-Continued

From	To	Wire	Notes
		CR11	
CR11 (+)	J7-9	#26 GRN	A14 BAT PWR SCE AVAIL.
CR11 (-)	CHAS GND LUG		
		CR12	
CR12 (+)	T1-5	#20 BLU	AC
CR12 (+)	CR15 (-)	#20 BLU	
CR12 (-)	CR14 (-)	#20 RED	
		CR13	
CR13 (+)	CR15 (+)	#20 BLK	
CR13 (+)	C1 (-)	#20 BLK	
CR13 (+)	C2		
CR13 (-)	CR14 (+)	#20 YEL	
		CR14	
CR14 (+)	CR13 (-)	#20 YEL	
CR14 (+)	T1-6	#20 YEL	
CR14 (-)	CR12 (-)	#20 RED	
CR14 (-)	L1-1	#20 RED	
CR14 (-)	C2		
		CR15	
CR15 (+)	CR13 (+)	#20 BLK	
CR15 (+)	T1-8	#20 BLK	
CR15 (-)	CR12 (+)	#20 BLU	
		CR16	
CR16 (+)	L2-2	#20 GRN	
CR16 (-)	L1-2	#20 RED	
		CR17	
CR17 (+)	L2-2		ON L2
CR17 (-)	L2-1		

Table 8-1. MRC Wire Run List-Continued

From	To	Wire	Notes
		CR18	
CR18 (+)	R5		ON S1
CR18 (-)	S1-2-3		
		E1	
E1	P7-13	#22 BRN	A17 BAT. RET
E1	P7-14	#22 BRN	A17 BAT. RET
E1	P7-15	#22 BRN	A17 BAT. RET
E1	J7-19	#20 BRN	A14 BAT. RET
		E2	
E2	P3-1	#26 RED	A1 + 18 VDC
E2	P3-9	#26 RED	A1 + 18 VDC
E2	A19-FL1	#26 RED	A19 + 18 VDC
E2	A23-E1	#26 WHT/ORN	A23 + 18 VDC
E2	A24-E9	#26 WHT/ORN	A24 + 18 VDC
		E3	
E3	P3-2	#26 BLK	A1 +18 VDC RET
E3	P3-7	#26 BLK	A1 +18 VDC RET
E3	P3-10	#26 BLK	A1 +18 VDC RET
E3	J2-2	#26 BLK	A3 +18 VDC RET
E3	J2-15	#26 BLK	A3 +18 VDC RET
E3	J3-2	#26 BLK	A4 +18 VDC RET
E3	A5-E1	#26 BLK	A5 +18 VDC RET
E3	P4-4	#26 BLK	A7 +18 VDC RET
E3	J4-2	#26 BLK	A8 +18 VDC RET
E3	J12-2	#26 BLK	A10 +18 VDC RET
E3	J5-14	#20 BLK	A12 +18 VDC RET
E3	J6-1	#20 BLK	A13 +18 VDC RET
E3	J7-25	#26 BLK	A14 +18 VDC RET
E3	A19-FL2 GND	#26 BLK	A19 +18 VDC RET
E3	A23-E2	#22 BLK	A23 +18 VDC RET
E3	A24-E3	#26 BLK	A24 +18 VDC RET

Table 8-1. MRC Wire Run List-Continued

From	To	Wire	Notes
		E3-continued	
E3	P8-15	#22 BLK	A25 +18 VDC RET
E3	P10-1	#22 BLK	A26 +18 VDC RET
E3	J5-15	#20 BLK	A12 +18 VDC RET
E3	J7-6	#20 BLK	A14 +18 VDC RET
E3	C4		
		E4	
E4	K1-B3	#20 RED	+21 -44V
E4	P3-3	#22 ORN	A1 +21 -44V
E4	C1 (+)	#20 RED	+21 -44V
E4	J5-1	#20 RED	A12 +21 -44V
		E5	
E5	P3-4	#22 BLK	A1 +21 -44V RET
E5	J5-7	#20 BLK	A12 +21 -44V RET
E5	C1 (-)	#20 BLK	+21 -44V RET
E5	J7-17	#20 BLK	A14 +21 -44V RET
		E6	
E6	K1-A2	#20 RED	+18 VDC
E6	J2-1	#26 RED	A3 +18 VDC
E6	P6-31	#20 RED	A9 +18 VDC
E6	A5-C1	#26 RED	A5 +18 VDC
E6	P4-5	#26 RED	A7 +18 VDC
E6	J12-1	#26 RED	A10 +18 VDC
E6	J6-2	#20 RED	A13 +18 VDC
E6	J7-24	#26 RED	A14 +18 VDC
E6	C5		+18 VDC
		E7	
E7	J2-4	#26 BLU	A3 -18 VDC
E7	P4-7	#26 BLU	A7 -18 VDC
E7	J6-10	#26 BLU	A13 -18 VDC

Table 8-1. MRC Wire Run List-Continued

From	To	Wire	Notes
		E7-continued	
E7	P8-8	#26 BLU	A25 -18 VDC
E7	P10-3	#26 BLU	A26 -18 VDC
		E8	
E8	J2-5	#26 BLK	A3 -18 VDC RET
E8	P4-6	#26 BLK	A7 -18 VDC RET
		E9	
E9	K1-A3	#20 RED	+18 VDC
E9	J3-1	#26 RED	A4 +18 VDC
E9	J4-1	#26 RED	A8 +18 VDC
E9	S5-1	#24 BLU	+18 VDC
E9	C4		+18 VDC
		E10	
E10	P6-26	#26 WHT/RED	A9 +5 VDC
E10	P6-27	#26 WHT/RED	A9 +5 VDC
E10	P6-28	#26 WHT/RED	A9 +5 VDC
E10	P6-29	#26 WHT/RED	A9 +5 VDC
E10	A16-FL2	#20 ORN	A16 +5 VDC
		E11	
E11	P2-10	#26 WHT/BLK	P2 RET FLOATING ALL
E11	P6-21	#26 WHT/BLK	A9 RET FLOATING ALL
E11	P6-22	#26 WHT/BLK	A9 RET FLOATING ALL
E11	P6-23	#26 WHT/BLK	A9 RET FLOATING ALL
E11	P6-24	#26 WHT/BLK	A9 RET FLOATING ALL
E11	A16-E1	#20 BRN	A16 RET FLOATING ALL
E11	J6-8	#26 BLK	A13 RET FLOATING ALL
E11	C6		RET FLOATING

Table 8-1. MRC Wire Run List-Continued

From	To	Wire	Notes
		E12	
E12	P4-2	#26 WHT/YEL	A7 +5 VDC
E12	J6-12	#22 YEL	A13 +5 VDC
E12	J7-3	#26 YEL	A14 +5 VDC
E12	P8-5	#26 YEL	A25 +5 VDC
E12	P10-2	#26 YEL	A26 +5 VDC
		E13	
E13	P4-3	#26 BLK	A7 +5 VDC RET
E13	J6-13	#22 BLK	A13 +5 VDC RET
E13	J12-4	#26 BLK	A10 +5 VDC RET
		E14	
E14	J5-9	#20 BLU	A12 +18 VDC
E14	J5-10	#20 BLU	A12 +18 VDC
E14	A24-E6	#26 WHT/YEL	A24 +18 VDC
E14	P8-7	#26 VIO	A25 +18 VDC
E14	S5-2	#26 BLU	+18 VDC
		F1	
F1 (BACK)	P1-1	#20 BLK	115/230 VAC
F1 (SIDE)	FL1 (IN)	#20 BLK	115/230 VAC
		F2	
F2 (BACK)	P1-2	#20 WHT	115/230 VAC
F2 (SIDE)	FL2 (IN)	#20 WHT	115/230 VAC
		F3	
F3 (BACK)	P1-11	#20 RED	EXT. DC INP.
F3 (SIDE)	L2-1	#20 GRN	EXT. DC INP.
		F4	
F4 (BACK)	J7-22	#20 RED	A14 INT. BAT.
F4 (SIDE)	P7-1	#22 RED	A17 INT. BAT.

Table 8-1. MRC Wire Run List-Continued

From	To	Wire	Notes
		F4-continued	
F4 (SIDE)	P7-2	#22 RED	A17 INT. BAT.
F4 (SIDE)	P7-3	#22 RED	A17 INT. BAT
		FL1	
FL1 (IN)	F1 (SIDE)	#20 BLK	115/230 VAC
FL1 (IN)	P8-4	#26 RED	A25 115/230 VAC
FL1 (OUT)	P1-4	#20 ORN	115/230 VAC
FL1 (OUT)	T1-1	#20 BLK	115/230 VAC
		FL2	
FL2 (IN)	F2 (SIDE)	#20 WHT	115/230 VAC
FL2 (OUT)	P1-7	#20 BLU	115/230 VAC
FL2 (OUT)	T1-4	#20 WHT	115/230 VAC
		J1	
J1-1	J2-7	#26 ORN	A3 + 15 VDC
J1-2	J2-8	#26 BLK	A3 ± 15 VDC RET
J1-3	J2-9	#26 GRN	A3 - 15 VDC
J1-4	SPARE		
J1-5	SPARE		
J1-A1	J2-A1	RG-178/U	83.3 Hz ERROR SIG.
J1-A1 (SHLD)	J2-A1 (SHLD)	NOTE 8	83.3 Hz ERROR RET
J1-A2	A25-E1	RG-178/U	CES. ION METERING
J1-A2 (SHLD)	A25-E6 (SHLD)	NOTE 8	CES. ION MET (RET)
		J2	
J2-1	E6	#26 RED	+ 18 VDC
J2-2	E3	#26 BLK	+ 18 VDC RET
J2-3	SPARE		
J2-4	E7	#26 BLU	- 18 VDC
J2-5	E8	#26 BLK	- 18 VDC RET
J2-6	SPARE		

Table 8-1. MRC Wire Run List-Continued

From	To	Wire	Notes
		J2-continued	
J2-7	J1-1	#26 ORN	+ 15 VDC
J2-8	J1-2	#26 BLK	± 15 VDC RET
J2-9	J1-3	#26 GRN	- 15 VDC
J2-10	A26-E1	RG-178/U	PR1 VCO
J2-11	A26-E2		PR1 VCO RET
J2-12	SPARE		
J2-13	P10-11	#26 WHT/BRN	EXCESS AC ERROR OUT
J2-14	P10-10	#26 WHT/BLK	2nd HARM. LEVEL OUT
J2-15	E3	#26 BLK	+ 18 VDC RET
J2-16	SPARE		
J2-17	SPARE		
J2-A1	J1-A1	RG-178/U	83.3 Hz ERROR SIC
J2-A1 (SHLD)	J1-A1 (SHLD)		83.3 Hz ERROR RET
J2-A2	J3-5	RG-178/U	VCO OUT
J2-A2 (SHLD)	J3-6		VCO OUT RET
J2-A3	P5-A6	RG-178/U	833.3 Hz INPUT
J2-A3 (SHLD)	P5-A6 (SHLD)		833.3 Hz INP. RET
J2-A4	J3-A3	RG-316B/U	MOD. OUT.
J2-A4 (SHLD)	J3-A3 (SHLD)		MOD. OUT RET
		J3	
J3-1	E9	#26 RED	+ 18 VDC
J3-2	E3	#26 BLK	+ 18 VDC RET
J3-3	S1-1-5	#26 GRN	PRI. OSC. OVEN TEMP.
J3-4	SPARE		
J3-5	J2-A2	RG-178/U	VCO OUT
J3-6	J2-A2 (SHLD)		VCO OUT RET
J3-7	SPARE		
J3-8	SPARE		

Table 8-1. MRC Wire Run List-Continued

From	To	Wire	Notes
		J3-continued	
J3-9	SPARE		
J3-10	SPARE		
J3-A1	P5-A1	RG-316/U	14.5 MHz OUT
J3-A1 (SHLD)	P5-A1 (SHLD)		14.5 MHz OUT RET
J3-A2	A5-J1	RG-316B/U	14.5 MHz OUT (FILTERED)
J3-A2 (SHLD)	A5-J1 (SHLD)		14.5 MHz OUT (FILT) RET
J3-A3	J2-A4	RG-316B/U	MOD. INP.
J3-A3 (SHLD)	J2-A4 (SHLD)		MOD. INP RET
		J4	
J4-1	E9	#26 RED	+ 18 VDC
J4-2	E3	#26 BLK	+ 18 VDC RET
J4-3	S1-1-6	#26 YEL	SEC. OSC. OVEN TEMP.
J4-4	R1-3	RED	FREQ. ADJ.
J4-5	R1-2	BLK	F. ADJ. RET
J4-6	R1-1 (SHLD)	SHLD	
J4-7	K1-X1	#26 WHT	
J4-8	SPARE		
J4-9	SPARE		
J4-10	SPARE		
J4-A1	J8	RG-316B/U	5 MHz OUT
J4-A1 (SHLD)	J8 (SHLD)		5 MHz OUT (RET)
J4-A2	P5-A3	RG-316B/U	5 MHz OUT
J4-A2 (SHLD)	P5-A3 (SHLD)		5 MHz OUT RET
J4-A3	P5-A7	RG-316B/U	VCO INP
J4-A3 (SHLD)	P5-A7 (SHLD)		VCO INP. RET.

Table 8-1. MRC Wire Run List-Continued

From	To	Wire	Notes
		J5	
J5-1	E4	#20 RED	+ 21→44 VDC
J5-2	SPARE		
J5-3	SPARE		
J5-4	J6-4	#26 GRN	SYNC
J5-5	SPARE		
J5-6	SPARE		
J5-7	E5	#20 BLK	+ 21→44 VDC RET
J5-8	SPARE		
J5-9	E14	#20 BLU	+ 18 VDC
J5-10	E14	#20 BLU	+ 18 VDC
J5-11	SPARE		
J5-12	SPARE		
J5-13	SPARE		
J5-14	E3	#20 BLK	+ 18 VDC RET
J5-15	E3	#20 BLK	+ 18 VDC RET
		J6	
J6-1	E3	#20 BLK	+ 18 VDC RET
J6-2	E6	#20 RED	+ 18 VDC
J6-3	A19-E2	#26 YEL	SYNC
J6-4	J5-4	#26 GRN	SYNC
J6-5	A16-E2	#26 YEL	SYNC
J6-6	A16-FL1	#22 VIO	+ 17 VDC
J6-7	P6-33	#26 ORN	+ 12 VDC
J6-8	E11	#20 BLK	RET FLOATING
J6-9	P6-36	#26 GRN	- 12 VDC
J6-10	E7	#26 BLU	- 18 VDC
J6-11	J12-3	#24 RED	+ 8 VDC
J6-12	E12	#22 YEL	+ 5 VDC
J6-13	E13	#22 BLK	+ 5 VDC RET
J6-14	J7-1	#26 ORN	+ 21→44 VDC
J6-15	J7-2	#26 BLK	+ 21→44 VDC RET

Table 8-1. MRC Wire Run List-Continued

From	To	Wire	Notes
		J7	
J7-1	J6-14	#26 ORN	+ 21→44 VDC
J7-2	J6-15	#26 BLK	+ 21→44 VDC RET
J7-3	E12	#26 YEL	+ 5 VDC
J7-4	CR6 (+)	#26 YEL	BAT. HIGH CHARGE
J7-5	CR5 (+)	#26 ORN	BAT. TRICLE
J7-6	E3	#20 BLK	+ 18 VDC RET
J7-7	S1-1-3	#26 WHT/GRN	BAT. CHARGE RATE
J7-8	CR9 (+)	#26 YEL	BAT. PWR. SOURCE IN USE
J7-9	CR11 (+)	#26 GRN	BAT. P WR. SOURCE AV.
J7-10	P6-30	#26 BLU	+5 VDC DISABLE A9 RELAY
J7-11	S6-3	#26 WHT/GRN	HIGH CHARGE
J7-12	S6-2	#26 WHT/ORN	LOW CHARGE
J7-13	S6-1	#26 WHT/YEL	AUTO CHARGE
J7-14	A11-E1	#26 YEL	BAT. CHARGER
J7-15	K1-B2	#20 RED	+ 21→44 VDC
J7-16	A11-E3	#20 ORN	BAT. CHARGER
J7-17	E5	#20 BLK	+ 21→44 VDC
J7-18	SPARE		
J7-19	E1	#20 BRN	BAT. RET
J7-20	P7-8	#26 YEL	A17 THERM.
J7-21	P7-7	#26 YEL	A17 THERM.
J7-22	F4 (BACK)	#20 RED	INT. BAT.
J7-23	SPARE		
J7-24	E6	#26 RED	+ 18 VDC
J7-25	E3	#26 BLK	+ 18 VDC RET
		J8	
J8	J4-A1	RG316B/U	5 MHz OUT
J8 (SHLD)	J4-A1 (SHLD)		5 MHz OUT. RET.

Table 8-1. MRC Wire Run List-Continued

From	To	Wire	Notes
		J9	
J9	J12-A3	RG-178/U	1 MHz OUT
J9 (SHLD)			1 MHz OUT. RET.
		J10	
J10	P3-12	RG-178/U	ZEEMAN INPUT
J10 (SHLD)	P3-13		ZEEMAN INP. RET
		J11	
J11 (1)	P9-16	#26 WHT/BLU	METER RET
J11 (2)	M1 (-)	#26 WHT/BLU	METER RET
		J12	
J12-1	E6	#26 RED	+ 18 VDC
J12-2	E3	#26 BLK	+ 18 VDC RET
J12-3	J6-11	#24 RED	+ 8. VDC
J12-4	E13	#26 BLK	+ 5 VDC RET
J12-5	P9-12	#26 WHT/RED	3 MHz MONITOR
J12-A1	P2-1	RG-178/U	3 MHz OUT.
J12-A1 (SHLD)	P2-1 (SHLD)		3 MHz OUT RET
J12-A2	P2-3	RG-178/U	3 MHz OUT
J12-A2 (SHLD)	P2-3 (SHLD)		3 MHz OUT RET
J12-A3	J9	RG-178/U	1 MHz OUT
J12-A3 (SHLD)	J9 (SHLD)		1 MHz OUT RET
J14-A4	P5-A5	RG-178/U	5 MHz INPUT
J12-A4 (SHLD)	P5-A5 (SHLD)		5 MHZ INP. RET

Table 8-1. MRC Wire Run List-Continued

From	To	Wire	Notes
		K1	
K1-A1	N.C		
K1-A2	E6	#20 RED	+ 18 VDC
K1-A3	E9	#20 RED	+ 18 VDC
K1-A3	K1-X2	#20 RED	
K1-B1	N.C.		
K1-B2	J7-15	#20 RED	+ 21→44 VDC
K1-B3	E4	#20 RED	+ 21→44 VDC
K1-X1	J4-7	#26 WHT	
K1-X2	K1-A3	#20 RED	
		L1	
L1-1	CR14 (-)	#20 RED	
L1-2	C1 (+)	#20 RED	
L1-2	CR16 (-)	#20 RED	
		L2	
L2-1	F3 (SIDE)	#20 GRN	EXT. DC INP.
L2-1	CR17 (-)	DIR	
L2-2	CR17 (+)	DIR	
L2-2	CR16 (+)	#20 GRN	
L2-2	A11-E11	#20 GRN	
		M1	
M1 (+)	P9-8	#26 GRY	METER
M1 (-)	J11 (2)	#26 WHT/BLU	METER RET
		P1	
P1-1	F1 (BACK)	#20 BLK	115/230 VAC
P1-2	F2 (BACK)	#20 WHT	115/230 VAC
P1-3	CHASSIS GND	#20 GRN	SAFETY GND LUG
P1-4	FL1 (OUT)	#20 ORN	
P1-5	T1-3	#20 YEL	
P1-6	T1-2	#20 BRN	

Table 8-1. MRC Wire Run List-Continued

From	To	Wire	Notes
		P1-continued	
P1-7	FL2 (OUT)	#20 BLU	
P1-8	SPARE		
P1-9	SPARE		
P1-10	SPARE		
P1-11	F3 (BACK)	#20 RED	EXT. DC INPUT
P1-12	C1 (-)	#20 BLK	EXT. DC INP. RET
		P2	
P2-1	J12-A1	RG-178/U	3 MHz OUT
P2-1 (SHLD)	J12-A1 (SHLD)	-- --	3 MHz OUT RET
P2-2	SPARE	-- --	
P2-2 (SHLD)	SPARE	-- --	
P2-3	J12-A2	RG-178/U	3 MHz OUT
P2-3 (SHLD)	J12-A2 (SHLD)		3 MHz OUT RET
P2-4	SPARE	-- --	
P2-4 (SHLD)	SPARE	-- --	
P2-5	P6-5	#26 WHT/VIO	REAL TIME DATA
P2-6	P6-6	#26 WHT/BRN	R.T.D. CLOCK
P2-7	P6-7	#26 WHT/YEL	R.T.D. GATE
P2-8	P6-8	#26 WHT/ORN	SECOND MARK
P2-9	P6-9	#26 WHT/GRN	MINUTE MARK
P2-10	E11	#26 WHT/BLK	RET. FLOATING VOLTAGE
P2-11	P10-13	#26 WHT/ORN	TIMING FAULT OUT
P2-12	P6-12	#26 WHT/BLK	RET. FOR PINS 5-11
P2-13	P6-13	#26 WHT/VIO	R.T.D
P2-14	P6-14	#26 WHT/BRN	R.T.D. CLOCK
P2-15	P6-15	#26 WHT/YEL	R.T.D. GATE
P2-16	P6-16	#26 WHT/ORN	SECOND MARK
P2-17	P6-17	#26 WHT/GRN	MINUTE MARK

Table 8-1. MRC Wire Run List-Continued

From	To	Wire	Notes
		P2-continued	
P2-18	P10-5	#26 GRN	TIMING FAULT RET
P2-19	SPARE		
P2-20	P6-20	#26 WHT/BLK	RET. FOR PINS 13-17
		P3	
P3-1	E2	#26 RED	+ 18 VDC
P3-2	E3	#26 BLK	+ 18 VDC RET
P3-3	E4	#22 ORN	+ 21→44 VDC
P3-4	E5	#22 BLK	+ 21→44 VDC RET
P3-5	SPARE	-- --	
P3-6	S1-1-4	#26 GRN	CESIUM OVEN TEMP.
P3-7	E3	#26 BLK	+ 18 VDC RET
P3-8	P3-14	#26 WHT/RED	JUMPER
P3-9	E2	#26 RED	+ 18 VDC
P3-10	E3	#26 BLK	+ 18 VDC RET
P3-11	P3-15	#26 WHT/BLK	JUMPER
P3-12	J10	RG-178/U	ZEEMAN INP
P3-13	J10 (SHLD)		ZEEMAN INP RET.
P3-14	P3-8	#26 WHT/RED	JUMPER
P3-15	P3-11	#26 WHT/BLK	JUMPER
		P4	
P4-1	S2-4	#26 WHT	2nd LOOP OPEN/OPR
P4-2	E12	#26 WHT/YEL	+ 5 VDC
P4-3	E13	#26 BLK	+ 5 VDC RET.
P4-4	E3	#26 BLK	+ 18 VDC RET.
P4-5	E6	#26 RED	+ 18 VDC
P4-6	E8	#26 BLK	- 18 VDC RET.
P4-7	E7	#26 BLU	- 18 VDC
P4-8	S3-2	#26 BRN	TIME CONSTANT RELAY
P4-9	S2-3	#26 GRY	2nd LOOP OPEN/OPR.

Table 8-1. MRC Wire Run List-Continued

From	To	Wire	Notes
		P5	
P5-A1	J3-A1	RG-316B/U	14.5 MHz INP.
P5-A1 (SHLD)	J3-A1 (SHLD)		14.5 MHz INP. RET.
P5-A2	SPARE	-- --	
P5-A2 (SHLD)	SPARE	-- --	
P5-A3	J4-A2	RG-316B/U	5 MHz INP
P5-A3 (SHLD)	J4-A2 (SHLD)		5 MHz INP. RET.
P5-A4	P6-1	RG-178/U	5 MHz OUT.
P5-A4 (SHLD)	P6-2 (SHLD)		5 MHz OUT. RET.
P5-A5	J12-A4	RG-178/U	5 MHz INP.
P5-A5 (SHLD)	J12-A4 (SHLD)		5 MHz INP. RET.
P5-A6	J2-A3	RG-178/U	833.3 Hz OUT
P5-A6 (SHLD)	J2-A3 (SHLD)		833.3 Hz OUT. RET.
P5-A7	J4-A3	RG-316B/U	5 MHz INP.
P5-A7 (SHLD)	J4-A3 (SHLD)		5 MHz INP. RET.
P5-A8	A26-E5	RG-178/U	SEC. VCO. INP.
P5-A8 (SHLD)	A26-E6		SEC. VCO. INP. RET
		P6	
P6-1	P5-A4	RG-178/U	5 MHz INP
P6-2	P5-A4 (SHLD)		5 MHz INP RET
P6-3	SPARE	-- --	
P6-4	SPARE	-- --	
P6-5	P2-5	#26 WHT/VIO	R.T.D.
P6-6	P2-6	#26 WHT/BRN	R.T.D. CLOCK
P6-7	P2-7	#26 WHT/YEL	R.T.D. GATE
P6-8	P2-8	#26 WHT/ORN	SECOND MARK
P6-9	P2-9	#26 WHT/GRN	MINUTE MARK

Table 8-1. MRC Wire Run List-Continued

From	To	Wire	Notes
		P6-continued	
P6-10	SPARE	-- --	
P6-11	SPARE	-- --	
P6-12	P2-12	#26 WHT/BLK	RET FOR PINS 5-9
P6-13	P2-13	#26 WHT/VIO	R.T.D.
P6-14	P2-14	#26 WHT/BRN	R.T.D. CLOCK
P6-15	P2-15	#26 WHT/YEL	R.T.D. GATE
P6-16	P2-16	#26 WHT/ORN	SECOND MARK
P6-17	P2-17	#26 WHT/GRN	MINUTE MARK
P6-18	SPARE	-- --	
P6-19	SPARE	-- --	
P6-20	P2-20	#26 WHT/BLK	RET. FOR PINS 13-17
P6-21	E11	#26 WHT/BLK	RET. FLOATING GND
P6-22	E11	#26 WHT/BLK	RET. FLOATING GND
P6-23	E11	#26 WHT/BLK	RET. FLOATING GND
P6-24	E11	#26 WHT/BLK	RET. FLOATING GND
P6-25	SPARE	-- --	
P6-26	E10	#26 WHT/RED	+ 5 VDC
P6-27	E10	#26 WHT/RED	+ 5 VDC
P6-28	E10	#26 WHT/RED	+ 5 VDC
P6-29	E10	#26 WHT/RED	+ 5 VDC
P6-30	J7-10	#26 BLU	+5VDC DISABLE A9 RELAY
P6-31	E6	#26 RED	+ 18 VDC
P6-32	SPARE	-- --	
P6-33	J6-7	#26 ORN	+ 12 VDC
P6-34	SPARE	-- --	
P6-35	SPARE	-- --	
P6-36	J6-9	#26 GRN	- 12 VDC
P6-37	SPARE	-- --	
		P7	
P7-1	F4 (SIDE)	#22 RED	INT. BAT.
P7-2	F4 (SIDE)	#22 RED	INT. BAT.

Table 8-1. MRC Wire Run List-Continued

From	To	Wire	Notes
		P7-continued	
P7-3	F4 (SIDE)	#22 RED	INT. BAT.
P7-4	SPARE	-- --	
P7-5	SPARE	-- --	
P7-6	SPARE	-- --	
P7-7	J7-21	#26 YEL	THERM.
P7-8	J7-20	#26 YEL	THERM.
P7-9	SPARE	-- --	
P7-10	SPARE	-- --	
P7-11	SPARE	-- --	
P7-12	SPARE	-- --	
P7-13	E1	#22 BRN	BAT. RET.
P7-14	E1	#22 BRN	BAT. RET.
P7-15	E1	#22 BRN	
		P8	
P8-1	S1-1-7	#26 BRN	VAC ION CURRENT
P8-2	S1-1-3	#26 RED	BAT. CHARGE RATE
P8-3	S1-1-2	#26 ORN	BAT. VOLT OUT
P8-4	FL1 (IN)	#26 RED	115/230 VAC
P8-5	E12	#26 YEL	+ 5 VDC
P8-6	S1-1-1	#26 BLU	DC SUPPLY VOLTAGE
P8-7	E14	#26 VIO	+ 18 VDC INP
P8-8	E7	#26 BLU	- 18 VDC
P8-9	S1-1-5	#26 WHT	PRI OSC. OVEN TEMP.
P8-10	S1-1-4	#26 GRN	CES. OVEN TEMP.
P8-11	SPARE	-- --	
P8-12	S1-1-6	#26 WHT/RED	SEC. OSC. OVEN TEMP.
P8-13	A24-E7	#26 WHT/ORN	VAC ION INP
P8-14	R2-2	#26 WHT/YEL	CES. OFFSET
P8-15	E3	#26 BLK	+ 18 VDC RET
P8-16	S1-1-8	#26 WHT/BLU	CES. ION CURRENT

Table 8-1. MRC Wire Run List-Continued

From	To	Wire	Notes
		P9	
P9-1	SPARE	-- --	
P9-2	S1-1-10	#26 RED	SEC. OSC. CONT. V
P9-3	SPARE	-- --	
P9-4	S1-2-11	#26 YEL	
P9-5	S1-1-C	#26 GRN	
P9-6	S1-1-9	#26 BLU	PRI. OSC. CONTR. V
P9-7	S1-2-C	#26 VIO	
P9-8	M1 (+)	#26 GRY	
P9-9	S2-5	#26 WHT/BLU	
P9-10	S1-1-11	#26 WHT/BLK	SEC. PHASE DET. VOLT
P9-11	P10-9	#26 WHT/BRN	SEC. PHASE DET. A26
P9-12	J12-5	#26 WHT/RED	
P9-12	S1-1-12	#26 WHT/RED	3 MHz SIGNAL LEVEL
P9-13	R2-1	#26 WHT/ORN	CES. OFFSET
P9-14	R2-3	#26 WHT/YEL	CES. OFFSET
P9-15	SPARE	-- --	
P9-16	J11 (1)	#26 WHT/BLU	METER RET
		P10	
P10-1	E3	#26 BLK	+ 18 VDC RET
P10-2	E12	#26 YEL	+ 5 VDC
P10-3	E7	#26 BLU	- 18 VDC
P10-4	S4-1	#26 YEL	RE-SET RET.
P10-5	P2-18	#26 GRN	TIMING FAULT RET
P10-6	SPARE	-- --	
P10-7	SPARE	-- --	
P10-8	CR1 (+)	#26 GRY	PRI. LOOP OPR.
P10-9	P9-11	#26 WHT/BRN	SEC. PHASE DET.
P10-10	J2-14	#26 WHT/BLK	2nd HARM LEVEL OUT
P10-11	J2-13	#26 WHT/BRN	EXCESS AC ERROR
P10-12	CR3 (+)	#26 WHT/RED	SEC. LOOP OPR
P10-13	P2-11	#26 WHT/ORN	TIMING FAULT OUT

Table 8-1. MRC Wire Run List-Continued

From	To	Wire	Notes
		P10-continued	
P10-14	CR2 (+)	#26 WHT/YEL	PRI. LOOP ALARM
P10-15	S4-2	#26 WHT/GRN	RE-SET SWITCH
P10-16	CR4 (+)	#26 WHT/BLU	SEC. LOOP ALARM
		R1	
R1-1	J4-6	SHLD	
R1-2	J4-5	BLK	FREQ. ADJ.
R1-3	J4-4	RED	FREQ. ADJ. RET
		R2	
R2-1	P9-13	#26 WHT/ORN	CES. OFFSET
R2-2	P8-14	#26 WHT/YEL	CES. OFFSET
R2-3	P9-14	#26 WHT/YEL	CES. OFFSET
		R3	
R3	S1-2-1		
R3	S1-2-2		
		R4	
R4	S1-2-3		
R4	S1-2-4		
		R5	
R5	S1-2-4		
R5	CR18 (+)		
		R6	
R6	S1-2-8		
R6	S1-2-9		
		R7	
R7	S1-2-11		
R7	S1-2-12		

Table 8-1. MRC Wire Run List-Continued

From	To	Wire	Notes
		R8	
R8	T1-5		
R8	T1-6		
		S1	
S1-1-C	P9-5	#26 GRN	
S1-1-1	P8-6	#26 BLU	DC SUPPLY VOLTAGE
S1-1-2	P8-3	#26 ORN	BAT. VOLTAGE OUT
S1-1-3	P8-2	#26 RED	BAT. CHARGE RATE
S1-1-3	J7-7	#26 WHT/GRN	BAT. CHARGE RATE
S1-1-4	P3-6	#26 GRN	CES. OVEN TEMP.
S1-1-4	P8-10	#26 GRN	CES. OVEN TEMP.
S1-1-5	J3-3	#26 GRN	PRI. OSC. OVEN TEMP
S1-1-5	P8-9	#26 WHT	PRI. OSC. OVEN TEMP
S1-1-6	J4-3	#26 YEL	SEC. OSC. OVEN TEMP
S1-1-6	P8-12	#26 WHT/RED	SEC. OSC. OVEN TEMP
S1-1-7	P8-1	#26 BRN	VAC. ION CURRENT
S1-1-8	P8-16	#26 WHT/BLU	CES. ION CURRENT
S1-1-9	P9-6	#26 BLU	PRI. OSC. CONT. VOLT
S1-1-10	P9-2	#26 RED	SEC. OSC. CONT. VOLT
S1-1-11	P9-10	#26 WHT/BLK	SEC. PHASE DET. V
S1-1-12	P9-12	#26 WHT/RED	3 MHz SIGNAL LEVEL
S1-2-C	P9-7	#26 VIO	
S1-2-1	R3		
S1-2-2	R3		
S1-2-2	S1-2-4	#26 BUSS	JUMPER
S1-2-3	CR18 (-)		
S1-2-3	R4		
S1-2-4	S1-2-2	#26 BUSS	JUMPER
S1-2-4	S1-2-5	#26 BUSS	JUMPER
S1-2-4	R4		
S1-2-4	R5		
S1-2-5	S1-2-4	#26 BUSS	JUMPER

Table 8-1. MRC Wire Run List-Continued

From	To	Wire	Notes
		S1-continued	
S1-2-5	S1-2-6	#26 BUSS	JUMPER
S1-2-6	S1-2-5	#26 BUSS	JUMPER
S1-2-6	S1-2-7	#26 BUSS	JUMPER
S1-2-7	S1-2-6	#26 BUSS	JUMPER
S1-2-7	S1-2-9	#26 BUSS	JUMPER
S1-2-8	R6		
S1-2-8	C3		
S1-2-9	S1-2-7	#26 BUSS	JUMPER
S1-2-9	S1-2-10	#26 BUSS	JUMPER
S1-2-9	C3		
S1-2-9	R6		
S1-2-10	S1-2-9	#26 BUSS	JUMPER
S1-2-10	S1-2-11	#26 BUSS	JUMPER
S1-2-11	S1-2-10	#26 BUSS	JUMPER
S1-2-11	P9-4	#26 YEL	
S1-2-11	R7		
S1-2-12	R7		
		S2	
S2-1	N.C.		
S2-2	CHAS GND LUG	#26 BUSS	JUMPER
S2-3	P4-9	#26 GRY	2nd LOOP OPEN/OPR
S2-4	P4-1	#26 WHT	2nd LOOP OPEN/OPR
S2-5	P9-9	#26 WHT/BLU	
S2-6	N.C.		
		S3	
S3-1	CHAS GND LUG		
S3-2	P4-8	#26 BRN	TIME CONST. RELAY
S3-3	N.C.		

T.O. 49B3-36-2

Table 8-1. MRC Wire Run List-Continued

From	To	Wire	Notes
		S4	
S4-1	P10-4	#26 YEL	RE-SET RET.
S4-2	P10-15	#26 WHT/GRN	RE-SET
S4-3	N.C.		
S4-4	N.C.		
		S5	
S5-1	E9	#24 BLU	+ 18 VDC
S5-2	E14	#24 BLU	+ 18 VDC
S5-3	N.C.		
		S6	
S6-1	J7-13	#26 WHT/YEL	AUTO. CHARGE
S6-2	J7-12	#26 WHT/ORN	LOW CHARGE
S6-3	J7-11	#26 WHT/GRN	HIGH CHARGE
		T1	
T1-1	FL1 (OUT)	#20 BLK	115/230 VAC
T1-2	P1-6	#20 BRN	
T1-3	P1-5	#20 YEL	
T1-4	FL2 (OUT)	#20 WHT	115/230 VAC
T1-5	CR12 (+)	#20 BLU	
T1-5	R8		
T1-6	R8		
T1-6	CR14 (+)	#20 YEL	
T1-7	A11-E10	#20 RED	
T1-8	CR15 (+)	#20 BLK	
T1-9	A11-E9	#20 ORN	

CROSS REFERENCE INDEX

(Prefix each Reference Number with Chapter Number denoted by the column.)

(KEY: Numbers preceded by "f" are illustrations, "t" are tables, others are paragraphs.)

OFFICIAL NOMEN-CLATURE	Chapter 2 Installation		Chapter 3 Preparation For Uses and Reshipment		Chapter 4 Operation			Chapter 5 Theory of Operation		Chapter 6 Maintenance	Chapter 7 Illustra-ed Parts Breakdown	Chapter 8
Common Name	Logistics	Procedures	Use	Reshipment	Controls and Indicators	Operating Instructions	Emer. Operation	System	Circuits			
MASTER REGULA-TING CLOCK TD-1251/U MASTER REGULA-TING CLOCK	2,3,4,5, 6,7,t1, t2	8,9,t3, t4,t5	2, f1, t1	3	2,f1,t1	4,5,6,7,8, t2	9	2	3,4,5,6, 7,f1	3,4,5,6,8, 9,10 f1-f20, t1-t24	2,3,4,5	2,3,4, f1-22,t1

ALPHABETICAL INDEX

INDEX-Continued

Subject	Paragraph, Figure, Table, Number

C-Continued

D

INDEX-Continued

Subject	Paragraph, Figure, Table, Number

D-Continued

E

F

INDEX-Continued

INDEX-Continued

INDEX-Continued

INDEX-Continued

INDEX-Continued

Subject	Paragraph, Figure, Table, Number

R-Continued

S

INDEX-Continued

Subject	Paragraph, Figure, Table, Number

S-Continued

T

INDEX-Continued

INDEX-Continued

Subject	Paragraph, Figure, Table, Number

0 thru 9

INDEX-Continued

☆ U. S. GOVERNMENT PRINTING OFFICE: 1979--600-008--519

Looking From Back

P1
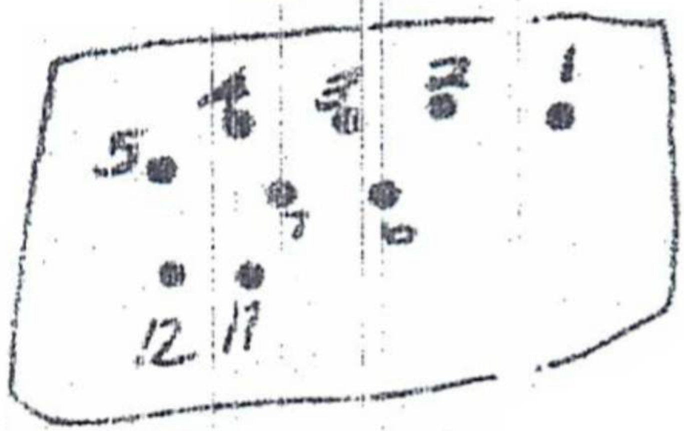
1 & 2 Power in

4,5 Jump

6 7 Jump

Cesium Beam Primary Frequency Standard

A Hybridized High-Reliability Militarized Cesium Beam Frequency Standard
Military Nomenclature: Master Regulating Clock 0-1824A/U Per MIL-F-28811A
Model FE-5440A, Option FHA

Features

- ***Easy to use, simple to operate***
- ***Extraordinary accuracy and long-term stability***
- ***SC cut quartz crystal to provide stable operation under dynamic environment***
- ***Front panel "C" Field Adjustment***
- ***Hybrid electronics for improved reliability, smaller size, lower power consumption***
- ***Rugged militarized design***
- ***May be synchronized externally to any second of time with a simple control button***
- ***Fully interchangeable modules***

FE-5440A front and rear view

Download FE-5440A PDF Datasheet

Function Description

The Cesium Beam Primary Frequency Standard is a rugged, compact, militarized, hybridized, solid-state, Atomic Frequency Standard and Real-Time-Of-Day Clock, which provides

• Standard and sinusoidal output frequencies of 5 MHz, 1 MHz and 100 kHz accurate to $\pm 5\times10^{-12}$ with a long-term stablity of $\pm 1\times10^{-11}$.

• Timing information in hours, minutes and seconds, in the form of a direct real-time LED display Time-Of-Day Clock, and 1 PPS and PPM outputs for driving external clocks.

The Standard owes its exceptional accuracy and stability to a unique frequency comparison-and-control system, in which a cesium atom (Cs^{133}) is used to stabilize the output frequency of a precision voltage-controlled quartz crystal oscillator using an SC cut crystal to provide improved performance under dynamic environments. The oscillator output is multiplied and drives the cesium tube.

The signal induces transitions from one hyperfine energy level to another, and those atoms which have undergone this transition are detected by a hot wire ionizer and electron multiplier. The output of the electron multiplier is fed back through an oscillator control circuit to correct the oscillator frequency, maintaining the Standard's accuracy.

Meters and Displays
Major circuit functions and signal levels are metered via a front panel circuit switch and meter in combination, providing a convenient means for determining the operational status of major circuits. Operating status and alarm LED displays indicate operational status of the primary and secondary loops.

Compact, Transportable
The Standard may be transported, used as a bench-mounted unit or rack-mounted by using the four mounting screws on its front panel.

Three Power Sources
The Standard may be operated from three power sources:
• First Priority—115 or 230 Vac, 47 to 400 Hz, single-phase.
• Second Priority—External 22 to 30 Vdc
• Third Priority—Internal battery supply.
Simultaneous connection of ac and dc power source inputs can be made.

Front panel indicators advise of input power availability, power source in use, and changing status of the internal battery supply.

Technical Characteristics

Accuracy	$\pm 3\times10^{-11}$, maintained over a temperature range of –28°C to +65°C and magnetic fields up to 0.2 millitesla (2 gauss) peak.
Reproducibility	$\pm 1\times10^{-11}$
Settability (Frequency)	$\pm 2\times10^{-13}$
Adjustment Range	6×10^{-11}
Long-Term Stability	$\pm 1\times10^{-11}$
Short-Term Stability (5 MHz)	See Figure 1
Output Voltage	1.0 to 1.5 Vrms into 50 ohms.
Voltage Required	115 or 230 Vac 10%, single phase. 47 to 100 Hz; or 22 to 30 Vdc.
Warm-Up Time	20 min.from –28°C when operated from ac line
Operating Temperature Range	–28°C to + 65°C

NAVWAR Business Opportunity
NIWC Atlantic - Solicitation
N65236-17-Q-7655 - CESIUM BEAM TUBE FOR MODIFICATION

Close

Subscribe | View Subscribers List

N65236-17-Q-7655

Description

Description:

SPAWAR (SSC ATLANTIC) INTENDS TO AWARD A FIRM FIXED PRICE PURCHASE ORDER ON A SOLE SOURCE BASIS TO MICROSEMI, INC. THE CESIUM BEAM TUBES ARE NECESSARY FOR PROPER OPERATION OF THE FE-5440A P/N: 21700-6200-4 CESIUM BEAM FREQUENCY STANDARDS/MASTER REGULATING CLOCKS. THESE FREQUENCY STANDARDS ARE PRECISION DEVICES AND MICROSEMI IS THE ONLY SOURCE FOR THE TUBES. IN ORDER TO ENSURE THAT THE TUBES ARE MODIFIED TO THEIR FACTORY SPECIFIED OPERATING CONDITION, ONLY THE OEM CAN MODIFY THE UNITS FOR THEIR INTENDED PURPOSES. IF ANY OTHER COMPNAY WAS TO COMPLETE THE MODIFICATION, IT WOULD CREATE THE RISK THAT THEY WOULD NOT RESTORE THEM TO THE CORRECT CONDITION IN ORDER TO BE COMPATIBLE WITH FE-5440A P/N D21700-6200-4 SYSTEM. IF THE GOVERNMENT WAS NOT TO USE THE OEM, IT WOULD CAUSE THE GOVERNMENT LOST TIME AND ADDITIONAL COSTS WHEN OTHER COMPANIES ARE UNABLE TO MODIFY THE CESIUM BEAM TUBES.
THIS IS NOT A REQUEST FOR COMPETITIVE QUOTES. IT IS A
NOTICE OF INTENT, HOWEVER, THE GOVERNMENT WILL ACCEPT QUOTES FROM ALL RESPONSIBLE SMALL BUSINESS SOURCES WITH THE CAPABILITY TO PROVIDE REQUESTED MODIFICATION OF THE BEAM TUBES AND WILL AWARD A FIRM FIXED PRICE PURCHASE ORDER RESULTING FROM THIS RFQ TO THE RESPONSIBLE VENDOR WHOSE OFFER CONFORMS TO THE SOLICITATION AND IS CONSIDERED TO BE MOST ADVANTAGEOUS TO THE GOVERNMENT. QUOTES ARE DUE BY 18:00 EASTERN STANDARD TIME ON THURSDAY JULY 27, 2017. NO ELECTRONIC OR HARD COPY RFQ WILL BE PREPARED OR MADE AVAILABLE FOR DISTRIBUTION. IF QUOTING, PLEASE SUBMIT QUOTES DIRECTLY TO detra.armstrong@navy.mil. PLEASE STATE YOUR FEDERAL TAX ID NUMBER, CAGE CODE
AND DUNN AND BRADSTREET NUMBER. PLEASE STATE ANY APPLICABLE SHIPPING CHARGES FOB DESTINATION AND OR FOB ORIGIN. PLEASE STATE YOUR BEST DELIVERY ARO. THIS SOLICITAITON IS SET ASIDE FOR SMALL BUSINESSES ONLY. ALL RESPONDING SMALL BUSINESS VENDORS MUST BE REGISTERED IN SAM PRIOR TO SUBMITTING INVOICES FOR PAYMENT. INFO TO REGISTER CAN BE FOUND AT WWW.SAM.GOV. INVOICES MUST BE SUBMITTED ELECTRONICALLY VIA WIDE AREA WORKFLOW (WAWF). INFO CAN BE FOUND AT WWW.HTTPS://WAWFTRAINING.EB.MIL. PLEASE QUOTE ON
THE BELOW ATTACHMENT CONSISTING OF REQUESTED ITEMS FOR MODIFICATION. FAR PART 13 SIMPLITIED ACQUISIITON PROCEDURES APPLY. FAR 13,102(A)(1).FAR 13.105 (B). PLEASE QUOTE ON THE BELOW ATTACHMENT CONSISTING OF REQUESTED ITEMS. GOVERNMENT FURNISHED MATERIAL WILL BE PROVIDED TO THE CONTRACTOR AND WILL CONSIT OF MATERIAL IDENTIFIED ON THE BELOW ATTACHMENT AND A GOVERNMENT FURNISHED PROPERTY FORM WILL ACCOMPANY THE AWARD DOCUMENT.
THE FOLLOWING CLAUSES WILL BE INCORPORATED IN THE AWARD DOCUMENT:
53.245-1 GOVERNMENT PROPERTY
52.245-9 USE AND CHARGES
252.245-7001 TAGGING, LABELING AND MARKING OF GOVERNMENT FURNISHED PROPERTY
252.245-7002 REPORTING LOSS OF GOVERNMENT PROPERTY
252.245-7003 CONTRACTOR PROPERTY MANAGEMENT SYSTEM ADMINISTRATION
252.245-7004 RE[PRTOMG REUTILIZATION AND DISPOSAL
252.211-7007 REPORTING OF GOVERNMENT FURNISHED PROPERTY
PLEASE QUOTE ON THE BELOW ATTACHMENT CONSISTING OF REQUESTED ITEMS FOR MODIFICATION.
Show details for Additional Information

Additional Information

Requiring Activity: SSC-C (CHARLESTON)

Technical POC: JERRY LONG

FS Code: 58
View List

NAICS Code: 334419
View List

Type of Action: Other Than Full and Open Competition - Only One Responsible Source of Supply

Recovery Act: No

Estimated Value:

Contact Information

Contracting Officer Name: Detra A Armstrong

Contract Specialist Name: Detra A Armstrong

Contract Specialist Phone Number: Information Unavailable

Contract Specialist E-mail Address: Information Unavailable

Status Information

Status: 4. Evaluation

Current Adjusted Server Time: 3/05/2020 16:28:30 Eastern

Attachments:

RFQMICROSEMI651196Armstrong-Detra-20170722193417.pdf	111 KB
Total	**111 KB**

Modification Tracking

Created By: Detra A Armstrong

Created Date: 07/23/2017

Last Modified By: System Auto Update

Last Modified Date: 07/27/2017

Delivery Order Evaluation Plan (DOEP)
CM ID#: SSCA_20_TEMPL_00001_DOEP Template_1.00

(This document replaces previous forms for the Requirements (RFQ), IGE and Source Selection Plan)

Simplified Acquisition Procedures (SAP) or Multiple Award Contract (MAC): SAP
DATE OF SUBMISSION: July 21, 2017

IPT or Project Name: PTTI
Lowest Level Portfolio ID: LIPTM00252
IPT or Project POC: MATTHEW BROUSSARD/41150/MATTHEW.BROUSSARD@NAVY.MIL
PPSM/PPAB Number: PPS-17-031
MAC Contract Number Range (if MAC): N/A
CRM Tracking Number (if MAC): CRM-17-01705
Purchase Request #: 130651196

RFQ
N65236-17-Q-1655

1. **Delivery Requirements**

DPAS RATING: <DO-A7> **NOTE: See DOEP RFQ Completion Guide For Guidance**

Delivery Address:
US Navy / Receiving Officer
SPAWAR Atlantic – Charleston, SC
1008 Trident Street
Hanahan, SC, 29410
Receiving POC: LONG, JERRY 843-218-4482

2. **Material Description and Independent Government Estimate**

CLIN	MFG	PART NO.	DESCRIPTION	IUID (Y/N)	QTY	UNIT OF MEASURE	UNIT PRICE	EXTENDED PRICE	BRAND NAME OR-EQUAL
1	CAGE: 1BOC5, Microsemi Inc.	FTS-7105A	CESIUM BEAM TUBE MODIFICATION FROM PART NUMBER FTS-7105A TO FTS-7505B	N	9	EA			BRAND
2									
3									

NOTE: Annotate "Yes" in the IUID column for material with a unit price of $5,000 or more, as well as any item with a unit price less than $5,000 that requires IUID compliance. **

******ALL CLIN's will be <u>NEW MFG AUTHORIZED/CERTIFIED EQUIPMENT</u> unless specified otherwise in additional notes within Section 3******

3. **Technical Specifications/Salient Characteristics:**

CLIN	Technical Specifications/Salient Characteristics
1	Factory modification of Cesium Beam tubes from part number FTS-7105A to FTS-7505B
2	
3	

NOTE: If "Equal" items are acceptable, you MUST provide Technical Specifications/Salient Characteristics for each CLIN. IAW FAR 11.104(b), Brand name or equal purchase descriptions must include, in addition to the brand name, a general description of those salient physical, functional, or performance characteristics of the brand name item that an "equal" item must meet to be acceptable for award. Use brand name or equal descriptions when the salient characteristics are firm requirements.

4. Basis for Estimate

CLIN	*For each line item/CLIN#, list either a website address that is directly connected to the pricing of the material OR list a previous award contract #/DO/CLIN and the date of the award. Another option if neither of these options exist, but a manufacturer's proprietary price list was obtained, state "Proprietary List will be provided to the KO once assigned. No other pricing available at this time."*
1	The price justification was formed through www.microsemi.com, Issued on 06-June-17, All CLINS apply.
2	
3	

DEVELOPMENT OF A CESIUM BEAM CLOCK FOR SATELLITE APPLICATION

James George and Alfred I. Vulcan
Frequency Electronics, Inc.
New Hyde Park, New York

Summary

A new Cesium Beam Clock has been developed whose design concept focuses on those parameters necessary for a space environment. The characteristics which were optimized for space use also resulted in a device which has application to airborne and ground based usage with stringent environmental conditions. These characteristics are low weight, low power consumption, radiation hardened, rugged construction, and long life. This paper discusses the general design concept and presents test data taken on two prototype units.

Introduction

Prototype resonators are constructed of 10", 12" and 14" length. In addition 20" tubes are presently in production for laboratory use. The 14" length was selected as the best compromise between frequency stability and tube life. The projected lifetime for the 14" tube is seven years minimum, with the projection based upon data gathered during 1 1/2 years of laboratory operation.

Some of the features used in the new resonator are as follows:

1. Indirectly heated Niobium target with a 10 section electron multiplier is utilized. The signal-to-noise ratio is 55 to 60 db as compared to 40 db for spectrometer detectors.

2. Improved shielding allows a small size.

3. An improved magnetic structure operating at 0.8 alpha for velocity selection gives a higher signal level as compared to standard tubes operating at 0.3 alpha.

4. Improved Cesium oven for zero gravatational environment using a metallic sponge structure preventing Cesium migration from the collimator.

5. Ruggedized construction permits operation to vibration levels of 28 Grms.

Design

Figure 1 is a table showing the basic environmental characteristics of the new Cesium Beam Resonator. Broad temperature range operation is obtainable through the use of a compensated waveguide structure and thermistor compensation networks for the multiplier diodes. The compensation permits usable operation over the temperature range of $-55^{\circ}C$ to $+71^{\circ}C$ with a coefficient of $1.3 \times 10^{-13}/^{\circ}C$. The temperature variation is due mainly to thermal expansion of the C-Field shield.

Figure 2 shows the Ramsey curve for the 14" Cesium Beam Resonator. The symmetry of the first order field independent state with the main peak centered indicates a linear magnetic field and good magnetic shield integrity. The high peak-to-valley ratio is an indication of good phase coherence in the microwave tee.

Figure 3 is a block diagram of the entire Cesium Beam Standard. The power dissipation of the tube including the oven, primary loop, multiplier, and detector is 8.5 watts. At $-60^{\circ}C$ an additional 3.5 watts is required for the Cesium oven. The primary loop has a time constant of 1 second and the secondary loop time constant is 20 seconds. An ovenized 14.59 MHz oscillator feeds a x630 multiplier chain consisting of a x18 and x35 Step-Recovery-Diode multiplier. The x35 output at 9.19 GHz feeds the resonator input.

A low noise FET amplifier at the tube output converts the detector signal to a usable level.

The Cesium oven controller is a high efficiency device using a pulse width modulation to achieve 82% efficiency. The power supply configuration consists of D.C. converters, switching regulators, and a series regulator in each module. This approach results in extremely low R.F. modulation by line related frequencies. The synthesizer accepts the 14.59 MHz signal and converts it to 5 MHz. The 5 MHz also drives a Time-of-Day clock which presents both a visual indication and a serial TOD output.

Figure 4 is a block diagram for the primary loop. A novel feature of this circuit is an auto lock provision such that in the event of a loss of lock in the satellite environment due to power outage, high radiation inputs, or EMC transients the system automatically reacquires the proper Ramsey peak within 30 seconds. Referring to figure 4 it is seen that the detected output from the FET amplifier drives a synchronous detector and a 2 millisecond delay compensates for the phase shift through the Cesium Beam Resonator. The offset null loop compensates for any long term drift of the integrator circuit so it has negligible effect on frequency.

A loss of lock initiates the sweep generator which slews the VCXO over a range of $\pm$ 1 PPM. At the same time the synchronous detector is inhibited and the output feeds a peak detector and hold circuit. Since the side lobes are 70% of the main lobe, the comparator and scaler senses when the main lobe is acquired, enabling the synchronous detector and locking the system. In actual use the VCXO sweeps through a minimum of 3 peaks and on the return sweep lock is obtained.

Figure 5 is a block diagram of the synthesizer and secondary loop. This circuit accepts the 14.59 MHz output from the primary loop and divides and mixes internally generated frequencies to synthesize 5 MHz. A programmable divider with a division ratio of 1,450 to 2,050 allows the output frequency to be changed over a range of 1×10^{-8} with a resolution of 1.6×10^{-13}. The 5 MHz oscillator in the secondary loop has extremely low phase noise and excellent short term stability and in the free-running condition the output signal has an aging rate of 2×10^{-11} per day. The secondary loop attack time is 20 seconds.

Various alarm conditions indicating loss of lock or other frequency anomalies are outputted to indicate improper system operation.

Specifications

The specifications for the satellite frequency standard are as follows:

PARAMETER	VALUE
Warm-Up	14 Minutes
Accuracy	$\pm 1 \times 10^{-11}$
Reproducability	3×10^{-12}
Settability	$\pm 1.6 \times 10^{-13}$
Long Term Stability	$\pm 1 \times 10^{-11}$/3 years
Short Term Stability	1.2×10^{-9}/100 microseconds 1×10^{-12}/Sec.
Jitter	25 psec. rms
Pulse Advance	100 nsec steps 1 sec maximum
Auto Sync	$\pm$ 0.5 microseconds
Battery Capacity	2 Hours at 25°C 1 Hour at +55°C and -30°C
Signal to Noise Ratio	60 db
Line Width	1100 Hz
Beam Tube Life	4 Years

This data is compiled for two prototype frequency standards for an 18 month period.

In order to determine if any life limiting characteristics are inherent in the design of the standard, signal-to-noise data and frequency have been measured on a weekly basis. This data is presented in figures 6 and 7. The signal-to-noise ratio which measured approximately 60 db during the first month of operation for both units has fallen off gradually to a level of approximately 55 db where it is remaining constant. This indicates that the gettering capacity and the structural integrity of the resonators is proper.

Figure 7 shows long term frequency stability for both resonators referred to LORAN C. A total excursion of 4×10^{-12} peak-to-peak is seen around a fixed offset of 2×10^{-13}. This data is well within the original design limits.

Physical Characteristics

The Cesium Beam Standard as packaged in a 19" rack panel assembly is shown in figure 8. Modular construction is used with each assembly being RFI filtered and independently replacable. A tabulation for the various subassemblies is shown in the figure. Figure 9 is the front panel view of the laboratory version of the standard. The panel height is 5.25" and the weight including batteries is 60 lbs. When packaged for D.C. operation the overall weight is 41 lbs. An extremely ruggedised construction is used since the standard is designed to operate under severe military requirements of shock and vibration. The assembly is completely RFI gasketed.

Conclusion

This paper describes recent developments in the manufacture of a new Cesium Beam Frequency Standard that has excellent electrical and mechanical characteristics and is applicable to both space and ground based use. The design is radiation hardened and constructed to meet severe environmental requirements.

CESIUM BEAM FREQUENCY STANDARD

MODEL FE-5440A

ENVIRONMENTAL SPECIFICATIONS

PARAMETER	VALUE
Vibration	0.5 g^2/Hz random
Temperature	-30° C to $+65^{\circ}$ C
Radiation Effect	$1 \times 10^{-12}/10^{4}$ Rads
Magnetic Field	0 to 25 oersteds
External Magnetic Field	$\pm 2 \times 10^{-12}/2$ Gauss
Reliability	10,000 Hours MTBF
Weight	57 lbs. A.C. Operation 41 lbs. D.C. Operation Only

FIGURE 1. ENVIRONMENTAL SPECIFICATIONS

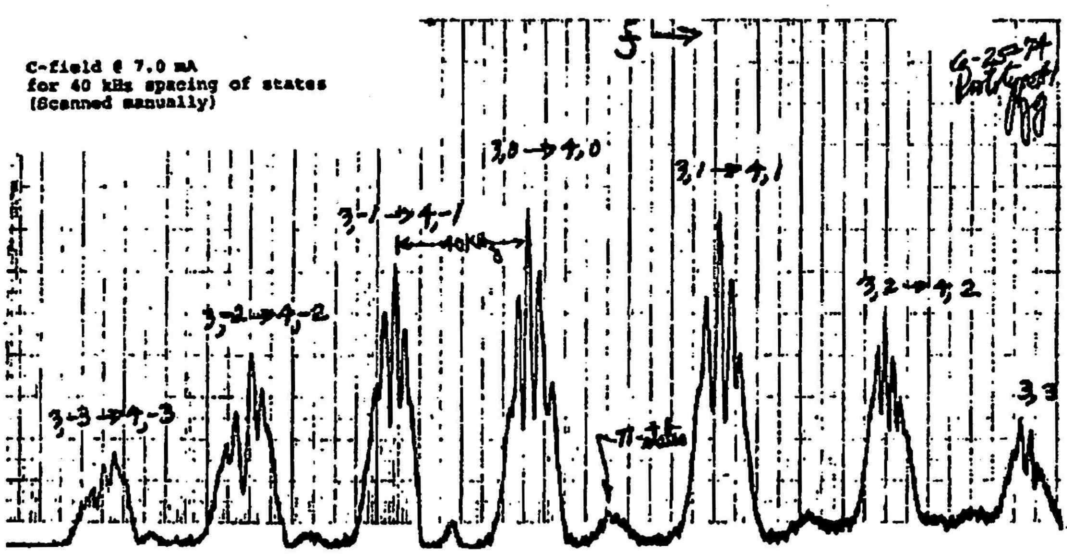

FIGURE 2. RAMSEY CURVE

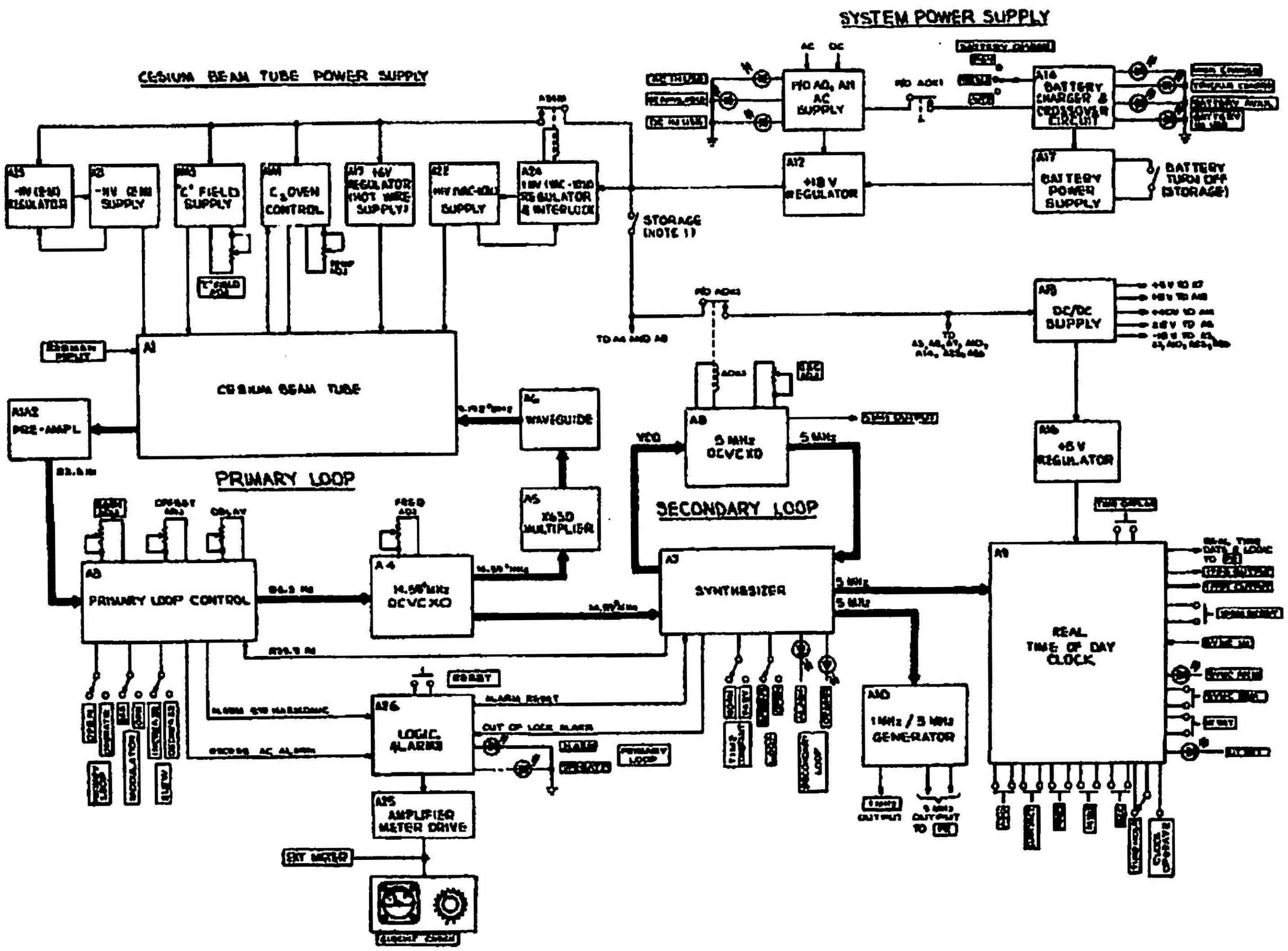

NOTES: 1. FOR STORAGE ABOVE 35°C, NOTED SWITCH SHALL BE OPEN
2. [ ] INDICATES PANEL MARKING

FIGURE 3. SYSTEM BLOCK DIAGRAM

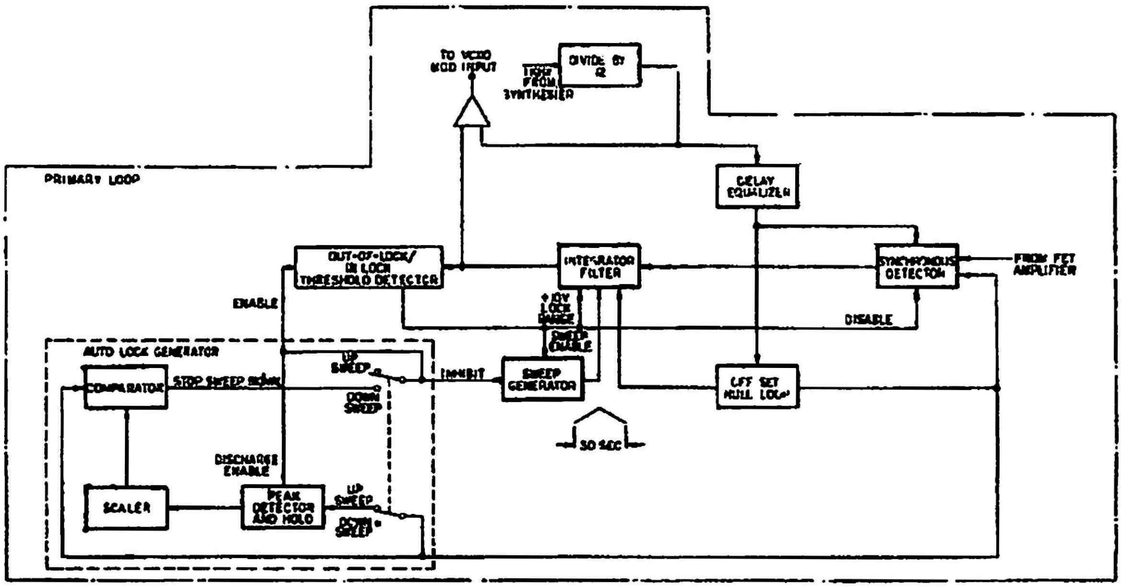

PRIMARY LOOP
ELECTRONICS
BLOCK DIAGRAM

FIGURE 4. PRIMARY LOOP BLOCK DIAGRAM

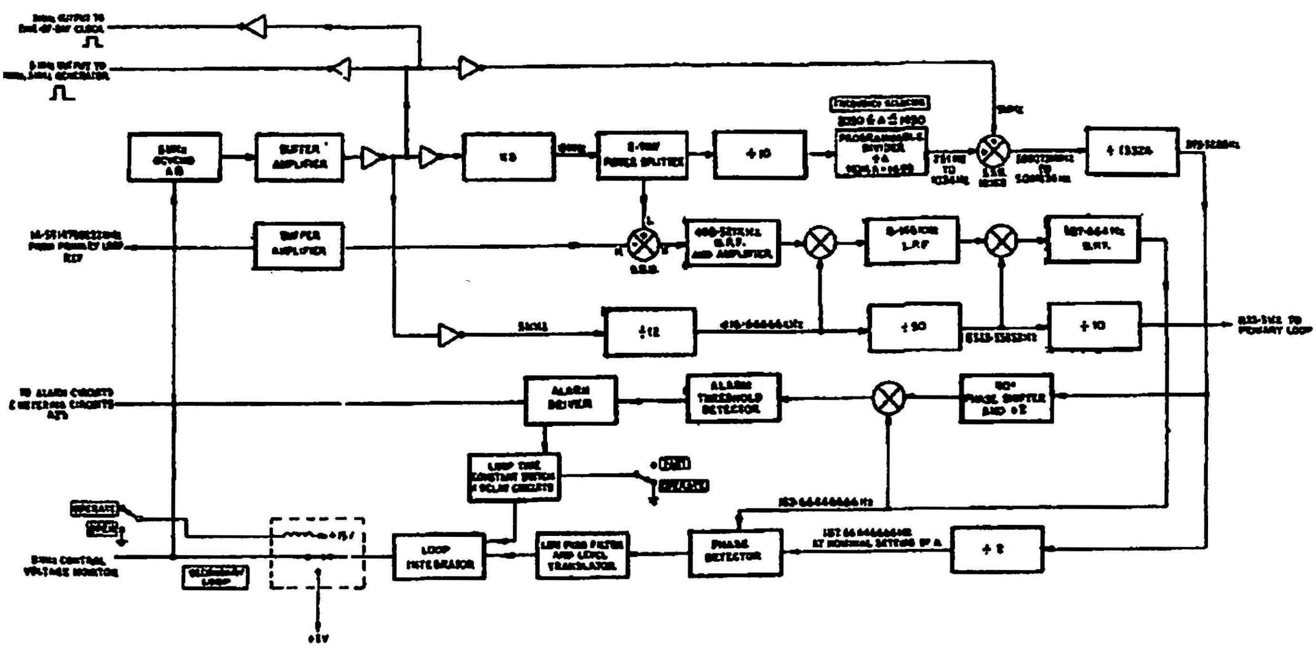

FIGURE 5. SYNTHESIZER BLOCK DIAGRAM

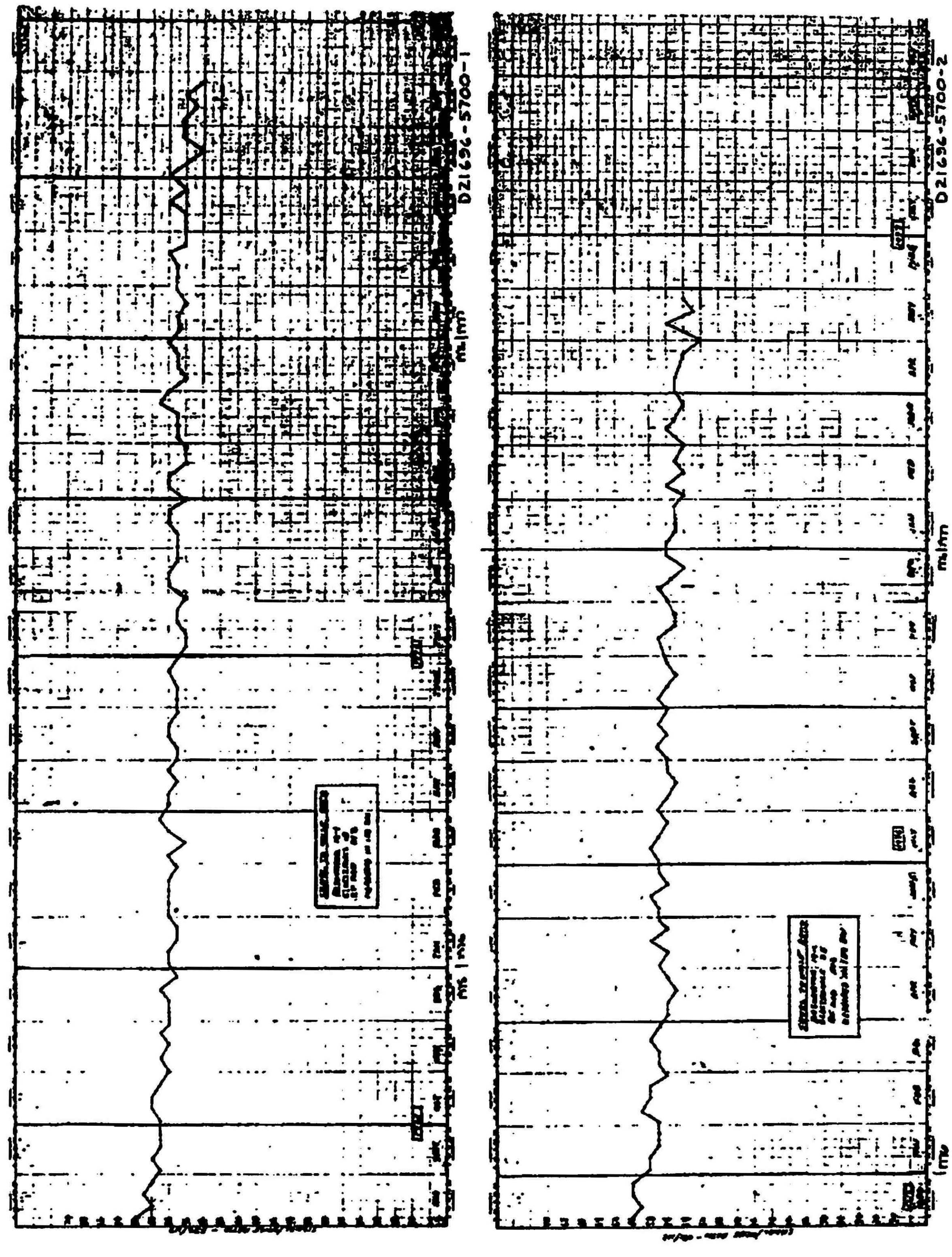

FIGURE 6. SIGNAL-TO-NOISE RATIO

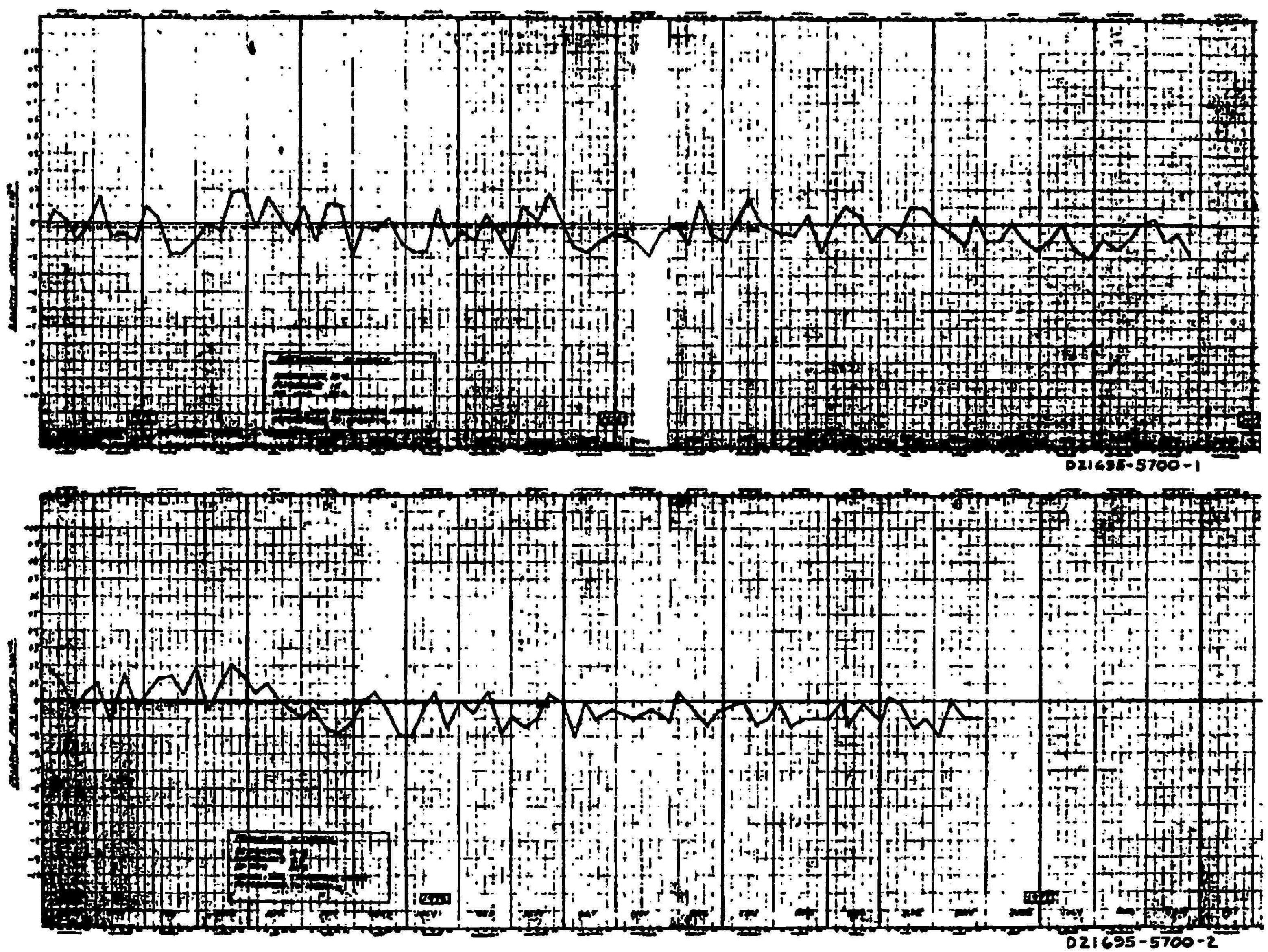

FIGURE 7. STABILITY

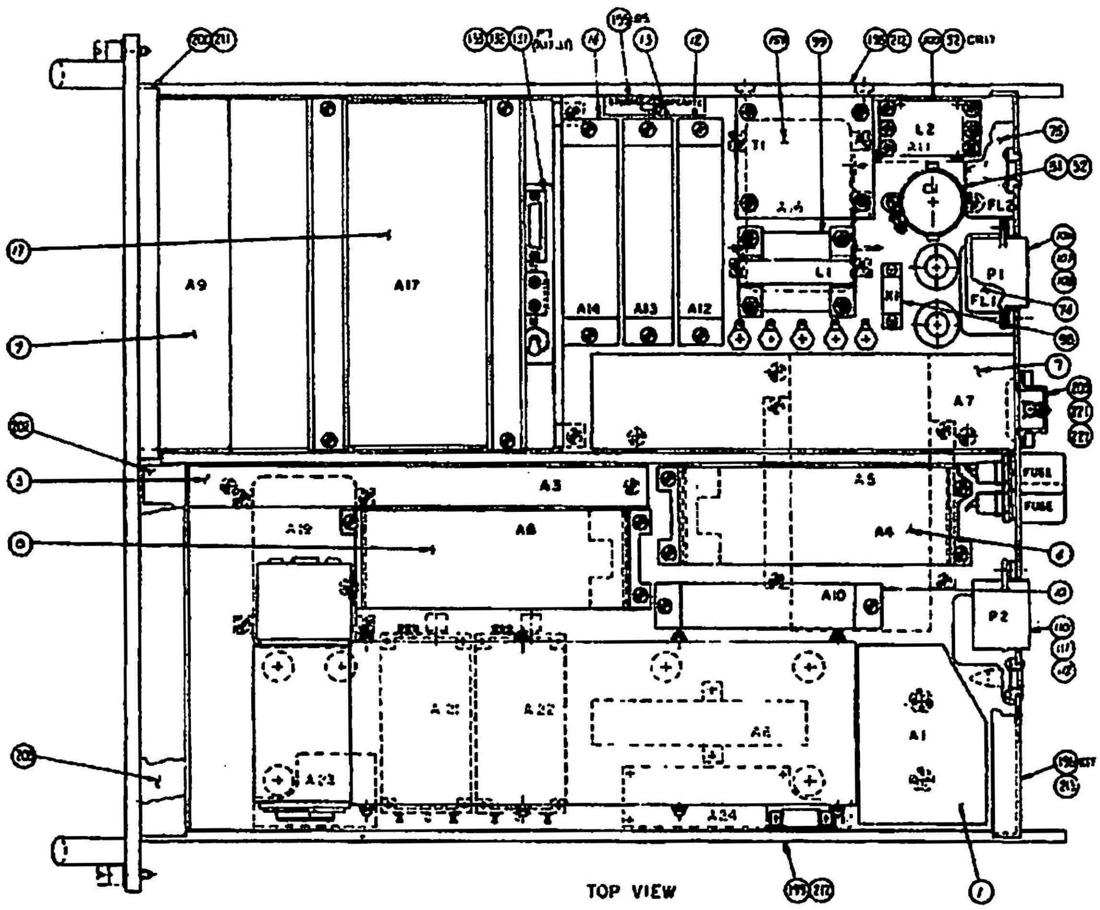

LIST OF MODULES

DESCRIPTION

1. PORTABLE PROGRAM CLOCK, PRS440A:
   - A0 PORTABLE PROGRAM CLOCK, PR-5440A
2. CESIUM BEAM RESONATOR:
   - A1 CESIUM BEAM RESONATOR ASSEMBLY
     - A1A1 CESIUM BEAM TUBE
     - A1A2 PREAMPLIFIER PC ASSEMBLY
     - A1A3 "C" FIELD SUPPLY PC ASSEMBLY
     - A1A4 CESIUM OVEN CONTROL PC ASSEMBLY
   - A2 NOT USED
3. PRIMARY LOOP:
   - A3 PRIMARY LOOP MODULE
   - A4 OCVCXO MODULE, PRIMARY, 14.59+ MHz
   - A5 MULTIPLIER MODULE, TIMES 630
   - A6 WAVEGUIDE ASSEMBLY
4. SECONDARY LOOP:
   - A7 SYNTHESIZER MODULE
   - A8 OCVCXO MODULE, SECONDARY, 5 MHz
   - A9 REAL TIME-OF-DAY CLOCK MODULE
   - A10 GENERATOR MODULE, 1 MHz, 3 MHz
5. SYSTEM POWER SUPPLIES:
   - A11 POWER SUPPLY PC ASSEMBLY
   - A12 SWITCHING REGULATOR MODULE, + 18 Vdc
   - A13 DC/DC CONVERTER MODULE;
   - A14 BATTERY CHARGER AND CROSSOVER MODULE
   - A15 NOT USED
   - A16 SWITCHING REGULATOR MODULE, + 5 Vdc
   - A17 BATTERY POWER SUPPLY MODULE, + 28 Vdc
6. CESIUM BEAM SUPPLIES:
   - A18 NOT USED
   - A19 SWITCHING REGULATOR MODULE, + 6 Vdc (HOT WIRE SUPPLY)
   - A20 NOT USED
   - A21 POWER SUPPLY, HIGH VOLTAGE, NEGATIVE, ELECTRON MULTIPLIER
   - A22 POWER SUPPLY, HIGH VOLTAGE, POSITIVE, VAC-ION
   - A23 REGULATOR PC ASSEMBLY, ELECTRON MULTIPLIER
   - A24 VAC-ION REGULATOR AND CESIUM BEAM INTERLOCK PC ASSEMBLY
7. METERING:
   - A25 AMPLIFIERS PC ASSEMBLY METER DRIVER
   - A26 LOGIC PC ASSEMBLY, ALARMS

FIGURE 8. ASSEMBLY, CESIUM BEAM CLOCK INTERNAL VIEW

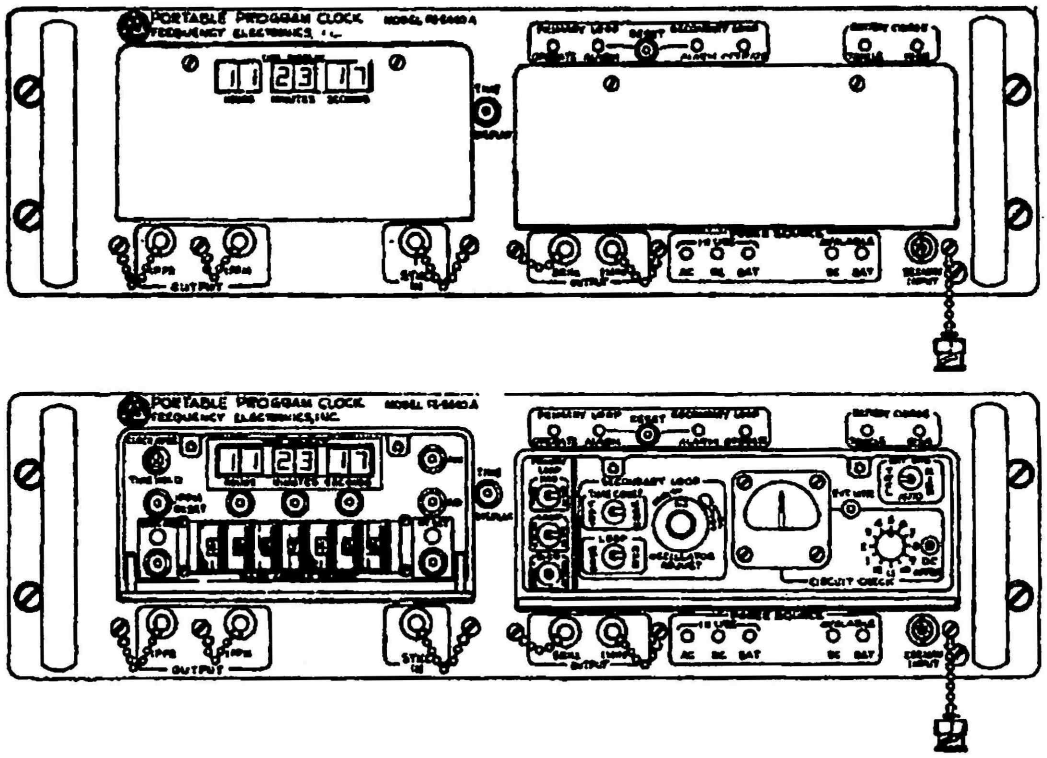

FIGURE 9. FRONT VIEW, CESIUM BEAM CLOCK

Performance demonstration of a compact, single optical frequency Cesium beam clock for space applications

S. Lecomte*, M. Haldimann, R. Ruffieux, P. Berthoud
Observatoire de Neuchâtel
Rue de l'Observatoire 58
CH-2000 Neuchâtel, Switzerland
**Electronic address:* steve.lecomte@ne.ch

P. Thomann
Laboratoire Temps-Fréquence, Université de Neuchâtel
Rue A.-L. Breguet 1
CH-2000 Neuchâtel, Switzerland

Observatoire de Neuchâtel has developed a compact optically-pumped cesium beam frequency standard in the frame of an ESA-ARTES 5 project. The simplest optical scheme, which is based on a single optical frequency for both preparation and detection processes of atoms, has been chosen to fulfill reliability constraints of space applications. With the last evolution of our laboratory demonstrator, we have measured a frequency stability of σ_y=1.14x10^{-12} $\tau^{-1/2}$, which is compliant with the Galileo requirement and our frequency stability goal of σ_y=1x10^{-12} $\tau^{-1/2}$. Present performance limitations are discussed and further improvements are proposed to possibly increase the frequency stability.

I. INTRODUCTION

Several space applications like navigation systems, telecommunications, long-term missions, and scientific missions require onboard atomic clocks. The system capability is mainly defined by the atomic clock performance. Although standard microwave atomic clock technology is well mastered for ground systems, they have to be adapted to the space environment in order to exhibit similar performances with rugged packaging and high system reliability as well as with strong reductions of mass, volume, and power consumption.

The two atomic clocks foreseen to take place onboard the first generation of Galileo satellites are respectively the Passive Hydrogen Maser (PHM) and the Rubidium Atomic Frequency Standard (RAFS). While the RAFS is a very compact clock (2.4 litres, 3.4 kg), the PHM is bigger (26 litres, 18 kg) [1], but exhibits a 5-fold improvement of the long-term frequency stability σ_y ($< 10^{-14}$ for $\tau > 10^4$ s). These two frequency standards being operated in vapour cell conditions, the influence of the environment is dramatic (frequency temperature coefficient). To overcome the long-term frequency instability of these standards, the atomic-beam frequency standard is an elegant alternative presently in wide use for GPS and GLONASS. Compared to a magnetically-deflected Cesium atomic-beam clock, a laser-pumped resonator has a better short-term stability, owing to the fact that it makes use of the full atomic velocity distribution and of the 2-fold increase of the useful atoms due to optical pumping. It can even compete with the PHM in terms of frequency stability. Moreover, due to its inherently simple design, its manufacturing and its reliability can be strongly improved with respect to the PHM.

Observatoire de Neuchâtel (ON) has developed such an Optically-pumped Space Cesium Atomic Resonator (OSCAR) prototype in the frame of an ESA-ARTES 5 project. Our goal was to demonstrate a frequency stability of $\sigma_y \leq 1$x10^{-12} $\tau^{-1/2}$ with a compact atomic resonator and only one optical frequency. This choice is motivated by space application prerequisites and has already been discussed [2]. The best-measured frequency stability with a 1-frequency scheme is σ_y=4x10^{-12} $\tau^{-1/2}$ with a compact laboratory atomic resonator and a single laser diode (852 nm, 25-MHz linewidth) [3]. By also using a compact atomic resonator, but a more complex optical setup (2-frequency scheme: one laboratory extended-cavity diode laser and one acousto-optic modulator), the frequency stability was improved to σ_y=1.4x10^{-12} $\tau^{-1/2}$ using either a Cs beam [4,5] or a Rb beam [6].

In these proceedings, we report on developments of our compact atomic resonator. First we describe the experimental setup (§II), then we present the experimental results and discuss the current limitations to the frequency stability performances (§III.A and III.B). Finally we present solutions to improve the atomic resonator frequency stability in the conclusion (§IV).

II. EXPERIMETAL SETUP

The architecture of the frequency standard is shown in Fig. 1: the Physics Package (PP) is composed of the Atomic Resonator (AR), while the Opto-Electronics Package (OEP) contains the Optics and Laser module (OL), the Optics and Laser Control module (OLC) and the Atomic Resonator Control module (ARC).

Work sponsored under ESA contract 18040/04/NL/DS

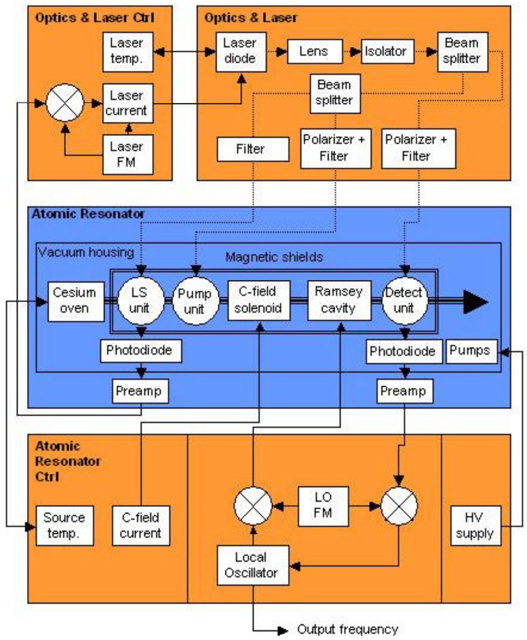

Fig. 1: Block diagram of the Optically-pumped Space Cesium Atomic Resonator (OSCAR). The blue module in the middle is the Physics Package and the orange side modules are parts of the Opto-Electronics Package and of the Atomic Resonator Control module.

The AR is fairly standard for an optically-pumped atomic beam resonator. An oven containing 2g of Cesium, fitted with a multi-channel collimator, produces the atomic beam. It crosses a first laser beam in the Laser Stabilization Unit (LSU), which takes advantage of the fluorescence signal to stabilize the laser frequency. Then, the atomic beam propagates through a second zone to achieve the required ground state population inversion (Pumping Unit, PU). Subsequently, the atomic beam crosses a short Ramsey cavity (12 cm), where the microwave resonance takes place. Finally, the atomic beam crosses the third laser beam (generated by the same laser) in the Detection Unit (DU), in which the final atomic state is optically probed. In both the LSU and in the DU, the atomic beam fluorescence light is first collected by a specially-machined concave mirror, then converted into photo-currents by a Si photodiode (33 mm^2) placed under vacuum, and finally converted into a photo-voltage by a low noise pre-amplifier outside of the vacuum enclosure. The three optical units and the microwave cavity are surrounded by a solenoid coil which produces a uniform magnetic C-field (up to 100 mG). The AR is maintained under ultra high vacuum by Cesium getters (graphite) and by a commercial ion pump.

The OL has been assembled to operate the atomic resonator with the 1-frequency scheme. Note however that it could be easily adapted for the 2-frequency scheme, by simply adding an acousto-optic modulator to shift the frequency of the laser detection beam.

The optical beam propagates in free space. The single 852-nm laser source is a Distributed Feed-Back diode (DFB), with an output power > 15 mW and a spectral linewidth < 2 MHz. The diverging laser beam is first collimated, then isolated (40 dB), and finally split into three beams. Neutral density filters and polarisers properly prepare their respective power and polarisation before entering the AR by windows. A homemade external cavity diode laser with a wavelength of 894 nm has also been used in place of the 852-nm DFB laser, due to the lack of performing DFB laser at this wavelength.

The ARC is composed of the necessary power supplies and driving electronics for the Cs oven temperature regulation, for the C-field solenoid current provision and for the ion pump high voltage supply. The microwave frequency chain (local oscillator, frequency multiplier and phase modulator) is a commercial device. It is based on the multiplication of a 10-MHz quartz oscillator with a step recovery diode. The frequency locking of the quartz oscillator and of the laser diode are performed digitally in a single Digital Signal Processor (DSP). In addition, the C-field amplitude and the RF interrogation power servo-loops can be implemented sequentially with the quartz frequency servo loop. Their different relevant parameters such as modulation amplitudes, gains, duty cycle and filter topologies can be adapted very conveniently with this digital electronics. Moreover it offers additional capabilities such as automatic atomic line searching, which however has not yet been implemented.

The OLC uses the Cesium beam inside the AR as the frequency discriminator (LSU photo-detector). The laser frequency is modulated by its injection current at 10 kHz and locked on the pumping transition lines Cs D2:44'σ (wavelength ≈852 nm) or Cs D1:34'π (wavelength ≈894 nm) by synchronous detection. These hyperfine transitions have been chosen for their highest population inversion ratio $\eta = 15.5\%$ and $\eta = 14.4\%$ respectively, and for its high fluorescence yield $\Delta_{ph} = 2.4$ ph/at [7]. Note that both transitions have nearly the same clock relevant parameters ($\eta \cdot \Delta_{ph}$).

III. Experimental Results

Before investigating optically the atomic beam, we have calibrated its overall flux with an ionization detector located downstream of the atomic resonator. Its detection solid angle is 6×10^{-5} sr (open surface of 5.5 mm^2 at a distance of 301 mm from the oven). The flux has been measured for oven temperatures from 90°C to 130°C. The measured ion current (proportional to the atomic flux) increases as the calculated Cs vapor density up to 100°C. For higher temperature, the atomic flux starts to saturate with respect to the Cs vapor density, which indicates the transition from molecular flow to viscous flow in the collimator. This behavior is similar to the one observed previously [8]. The useful atomic flux for the atomic resonator (atoms in the $m_F = 0$ hyperfine state having contributed to the Ramsey signal) is about 1.5×10^{10} at/s at the oven temperature of 130°C.

The two fluorescence light collection optics with 33-mm^2 silicon photodiodes convert about 30% of the fluorescence photons into photoelectrons. This collection efficiency is presently limited by the size of the photodetectors. It could be increased by increasing the photodetectors size but at the price of more stray light and its associated shot-noise.

Birefringent optical elements depolarize the laser beams in the PU and the DU [9] for the used D2 transition. A polarization gradient along the atomic beam increases the efficiency of the optical pumping in the PU without requiring a strong static magnetic field [10], or a 1D optical molasses [11].

The optical power in both the PU and DU was optimized for maximum signal-to-noise ratio (SNR) in order to increase the frequency stability of the standard.

A. Results obtained with the D2:44'σ transition

The central Ramsey fringe recorded at an oven temperature of 130°C is plotted in Fig. 2. A weak and uniform C-field of 52 mG is applied over all optical units (LSU, PU, and DU) and over the microwave Ramsey cavity (Fig. 1). The RF power is adjusted for maximizing the clock signal. The AR has the following performances: the atomic linewidth is 858 Hz, yielding an atomic quality factor of 10^7, the Ramsey central fringe peak-to-valley photo-current is 1681 pA, the background photo-current is 2.5 nA, and the noise current density at resonance is 41 fA/Hz$^{1/2}$ (at a Fourier frequency of 27 Hz, see Fig. 3) yielding a clock SNR of 41'000 Hz$^{1/2}$ at clock resonance.

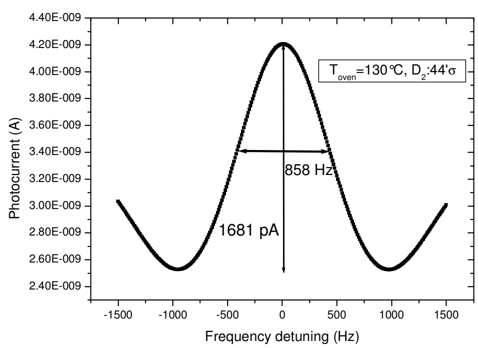

Fig. 2: Ramsey central fringe recorded with an oven temperature of 130°C.

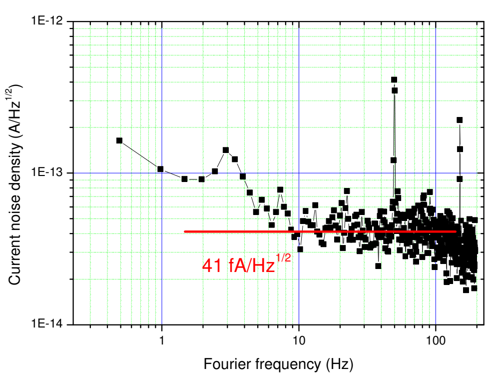

Fig. 3: Current noise density (measured at Ramsey fringe peak) recorded with an oven temperature of 130°C.

By operating the atomic resonator with these optimal parameters, and frequency locking the quartz local oscillator with the digital electronics, we have measured its frequency stability with respect to an active hydrogen maser (Fig. 4). The Allan standard deviation extrapolated down to 1s gives at short-term frequency stability of σ_y=1.51x10^{-12} $\tau^{-1/2}$. To the best of our knowledge, this frequency stability is the best ever measured with a compact optically-pumped atomic beam frequency standard operated with a single optical frequency scheme (single laser diode and no acousto-optic modulator). For long integration time constants (from 4000s), environmental magnetic and thermal perturbations degrade the clock frequency stability. For this laboratory demonstration, we remind that only one single magnetic shield is assembled. Moreover, neither C-field nor RF power servo loops are operating.

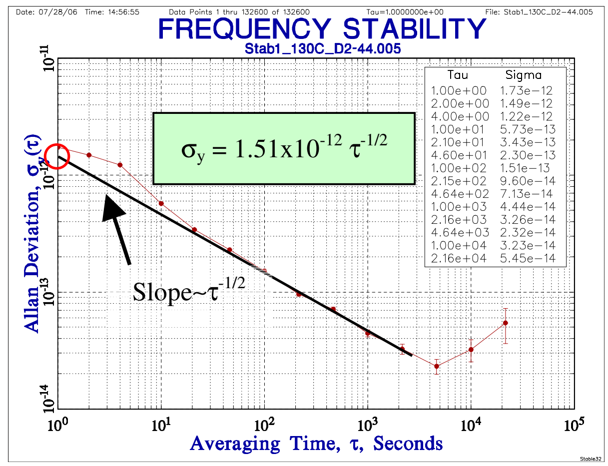

Fig. 4: Measured frequency stability of OSCAR operated with a single wavelength and a 852-nm DFB laser.

Although the stability of the clock is better than the requirement for the Galileo satellite navigation system (σ_y ≤3x10^{-12} $\tau^{-1/2}$), the ultimate frequency stability goal of σ_y ≤1x10^{-12} $\tau^{-1/2}$ has been nearly reached. In fact, the clock noise is not atomic shot-noise limited. In the following we will analyze the various noise contributions to the total clock noise and discuss the improvements to be performed in order to increase the clock SNR and reach the atomic shot-noise limit.

In Fig. 5, we plot the different noise current densities as a function of the Ramsey peak-valley photocurrent. The different noise measurements and the optimizations have been performed at the Ramsey central fringe maximum. The corresponding oven temperatures are given for information.

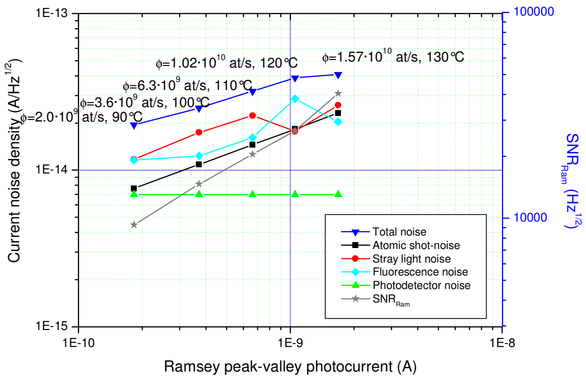

Fig. 5: Noise budget and overall SNR of OSCAR as function of the Ramsey peak-valley photocurrent.

We have identified four noise contributions in the clock signal noise budget:

1. *Photodetector noise*: it is measured in the dark and is independent of the Ramsey photocurrent; for nominal operating atomic flux, this contribution is negligible in the overall noise budget.
2. *Stray light noise*: it is measured with the nominal optical power but off-resonance, is proportional to the square root of the DC stray light level (shot noise), but is independent of the Ramsey photocurrent; this technical noise contribution is mainly due to light scattering by the optical windows mounted on the vacuum enclosure. The optical power has been optimized for each oven temperature and at the peak of the Ramsey central fringe.
3. *Atomic shot-noise*: it is calculated as the square root of the atomic signal; presently this noise contribution is largely dominated by the technical noise.
4. *Fluorescence noise*: it is computed from the total measured noise minus the other contributions in RMS values. This noise contribution appears to be roughly proportional to the square root of the Ramsey signal and is related to the residual frequency noise of the laser converted into amplitude by the atomic beam frequency discriminator. In order to reduce it, the residual frequency noise of the laser has to be minimized in closed loop operation. Presently, our laser stabilization electronics has a very narrow servo-loop bandwidth (<100 Hz), limited by the ADC/DAC stage of our digital electronics. By increasing it by a factor 100, the amount of fluorescence noise should be reduced to an acceptable value. Another alternative, demonstrated here, is to optimize the optical power as function of the atomic flux. An optimum of the optical power, in terms of clock SNR, is found for each atomic flux.

The second major noise contribution arises from the stray light level and its associated shot-noise. While the light traps placed under vacuum are sufficiently absorbent, the laser scattering on the optical windows of the vacuum enclosure induces a large amount of stray light. New windows of better optical quality with efficient anti-reflection (AR) coating will be mounted and should strongly reduce the amount of stray light. By effectively reducing these two major noise contributions, the total noise of the clock should be close to the atomic shot-noise contribution.

B. *Results obtained with the D1:34'π transition*

The characterization of the resonator has been repeated at 894 nm with a C-field of 83 mG. In this case an extended cavity diode laser with a narrow linewidth was used. By operating the oven at a temperature of 130°C, we obtained a SNR of 43'000 $Hz^{1/2}$. This narrower laser (compared to the DFB laser) allows to injecting less optical power in the detection unit. This reduces the stray light associated noise and the laser induced fluorescence noise. The clock SNR is therefore increased since the Ramsey peak-valley is nearly the same as with the DFB laser.

The frequency stability of $1.14 \times 10^{-12}\,\tau^{-1/2}$ measured against a hydrogen maser and presented in Fig. 6 is, to our knowledge, the best stability ever measured for such a resonator. The displayed frequency stability is significantly degraded for integration times $\tau < 100$ s. This is partially due to the C-field current source which was not actively stabilized (it was not the case for the stability presented in Fig. 4). For long integration times $\tau > 1000$ s, environmental perturbations become visible.

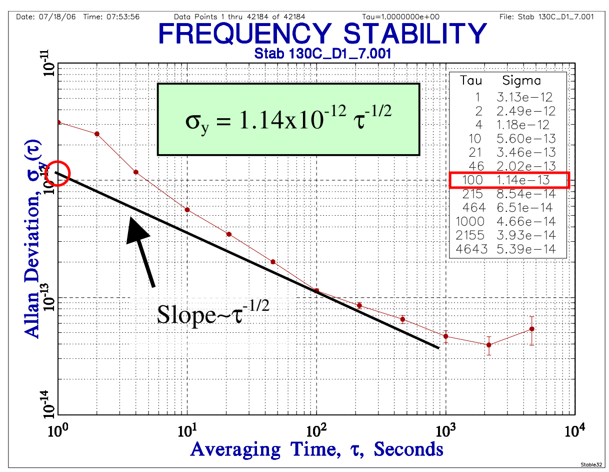

Fig. 6: Measured frequency stability of OSCAR operated with a single wavelength and a 894-nm extended-cavity diode laser.

IV. CONCLUSIONS AND OUTLOOK

We have reported in these proceedings on the experimental setup of an optically-pumped cesium beam frequency standard. Its concept relies on the simplest optical scheme, in which we use only one optical frequency (one laser, no AOM). By depolarizing the laser beams (only for the D2 transition) for the optical pumping processes (preparation and detection), we can use a single, uniform and weak magnetic

C-field for the optical units without trapping atoms in dark states. A fully digital electronics based on a DSP processor has been specially developed for frequency locking both the laser and the quartz local oscillator. This digital electronics also allows to sequentially locking the magnetic C-field and the RF injection power in the Ramsey cavity although it has not been used in the present measurements.

We have demonstrated what is, to the best of our knowledge, the best ever-measured frequency stability of $\sigma_y=1.14\text{x}10^{-12}\ \tau^{-1/2}$ with a compact optically-pumped atomic beam frequency standard operated with a single optical frequency scheme. Although the demonstrated frequency stability is sufficient for Galileo, the clock SNR is not yet limited by the atomic shot-noise. The noise budget has identified the two major noise sources: the "fluorescence noise" and the "stray light noise". While the former could be reduced by increasing the laser frequency servo loop bandwidth, the later will call for top quality optical windows. The marginal fluorescence light collection efficiency could be increased by implementing new and optimize optical collectors with possibly larger photodetectors. The results of this study will be implemented in the design of the breadboard Cesium resonator for the second generation of Galileo onboard clocks. This new project is currently ongoing with the financial support of ESA within a consortium led by Thalès Electron Devices, France, and with the following partners: Oerlikon Space AG, Switzerland, SYstème de Référence Temps Espace, France and Observatoire de Neuchâtel [12, 13].

REFERENCES

[1] F. Droz et al., "The On-board Galileo Clocks: Rubidium Standard and Passive Hydrogen Maser -Current Status and Performance-", 20th European Time and Frequency Forum, 2006, Braunschweig, Germany.

[2] P. Berthoud et al., "A feasibility study of an optically-pumped cesium beam resonator for space applications", 19th European Time and Frequency Forum, 2005, Besançon, France.

[3] P. Petit et al., "Performance of a 2 dm^3 optically pumped cesium beam tube: a progress report", 8th European Time and Frequency Forum (EFTF), 1994, Munich, Germany.

[4] R. Lutwak et al., "Optically-pumped cesium beam frequency standard for GPS-III", 33rd Annual Precise Time and Time Interval (PTTI) Meeting, 2001, Long Beach, CA, USA.

[5] S. Guérandel et al., "Compact cesium beam frequency standard: improvements of the frequency stability towards the 10-12 t-1/2 level", 16th European Time and Frequency Forum, 2002, St-Petersburg, Russia.

[6] A. Besedina et al., "Preliminary results of investigation of the high-stable Rudidium atomic beam frequency standard with laser pumping/detection for space", 20th European Time and Frequency Forum, 2006, Braunschweig, Germany.

[7] N. Dimarcq et al., "Comparison of pumping a cesium beam tube with D_1 and D_2 lines", J. Appl. Phys., **69** (3), p. 1158-1162 (1991).

[8] S. Lecomte et al., "Development of a single-frequency optically-pumped cesium beam resonator for space applications", 20th European Time and Frequency Forum, 2006, Braunschweig, Germany.

[9] P. Berthoud and P. Thomann, patent number WO 2006/084829 A1.

[10] V. Giordano et al., "New design for a high performance optically pumped cesium beam tube", IEEE Transactions on Ultrasonics, Ferroelectrics, and Frequency Control, 38 (4), p. 350-357 (1991).

[11] J. H. Shirley and R. E. Drullinger, "Zeeman coherences and dark states in optically pumped cesium frequency standards", IEEE Prec. Electromagn. Meas., 1994, Boulder, CO, USA.

[12] S. Guerandel et al., "In-depth analysis of the frequency analysis of optically pumped cesium beam frequency standards", 21th European Time and Frequency Forum, 2007, Geneva, Switzerland, in these proceedings.

[13] V. Hermann et al., "OSCC project: a space Cs beam optically pumped atomic clock for Galileo", 21th European Time and Frequency Forum, 2007, Geneva, Switzerland, in these proceedings.

TRIPLY-REDUNDANT PRECISION TIME AND FREQUENCY STANDARD

D. Silvermetz, M. Bloch, and M. Meirs
Frequency Electronics, Inc.
55 Charles Lindbergh Blvd.
Mitchell Field, New York 11553

ABSTRACT

This paper describes a triply-redundant precision time frequency standard. The standard combines three high performance, field-proven Frequency Electronics devices; namely, the cesium beam frequency standard, the rubidium frequency standard and the SC-cut quartz oscillator in a single 5-1/4" high rack-mounted instrument. Switching between redundant subsystems is accomplished automatically in a glitch-free manner (i.e., negligible phase perturbation), utilizing a process of dynamic phase-matching in conjunction with digital memory circuits.

The system design is based upon the incorporation of a Model FE-5600A Rubidium Standard within the Model FE-5440A (military nomenclature O-1824/U) Cesium Frequency Standard, and utilization of disciplining phase lock loop circuitry from the AN/URQ-23A Disciplined Time Frequency Standard.

In the primary mode, the system functions as a Cesium Standard with a long-term stability of $<1 \times 10^{-11}$. In the secondary (back-up) mode, the rubidium standard provides a thirty day stability of $<3 \times 10^{-11}$. The tertiary (back-up) mode offers the low drift rate of the SC-cut quartz oscillator, namely $<1 \times 10^{-11}$ per day.

Introduction.

The Triply-Redundant Precision Time and Frequency Standard under development at Frequency Electronics, Inc., (FEI) combines features of 3 FEI instruments into a single, cost-effective, rugged device. It has the same configuration and size as the Frequency Electronics Cesium Frequency Standard, the O-1824/U Master Regulator Clock. The frequency standard has been updated to include three redundant modes. Transfer of operation from the primary cesium mode to Rubidium or Quartz backup modes occurs automatically, and glitch-free (i.e., with phase perturbations under 1.6 millidegrees), through use of frequency memory circuits.

Let me show you how 3 instruments are combined into one:

Start with an FEI Cesium Frequency Standard, with a long term stability of 1×10^{-11} in 5 years, (see figure 1). This unit is qualified to MIL-F-28811(EC), and bears the military nomenclature Master Regulator Clock O-1824/U. It provides low noise sinusoidal signals, timing marks, and a serial BCD time code output.

See figure 2 for a look inside. The unused volume was made possible by using the lightweight Cesium beam resonator fabricated at FEI and by incorporating six FEI hybrid circuits. Spare volume permits customization for different applications. FEI can customize for various frequencies up to Ku-Band.

Figure 3 provides a closer look at the FEI Cesium Beam Resonator. An example of hybrids designed and fabricated at FEI is shown in figure 4. Incidentally, Frequency Electronics has built class S hybrids for various military and space programs in the range of dc-44 GHz.

We are now ready to look at the 2nd instrument, the Rubidium Frequency Standard (see figure 5). The entire unit, from physics package to electronics, is fabricated at FEI. Figure 6 is a photograph with cover removed. The version shown contains discrete components; the model currently being manufactured contains six hybrid circuits. The Rubidium Frequency Standard has a 30 day stability of 3×10^{-11} and serves as our back-up standard.

The final ingredients going into the triply-redundant standard are derived form the Disciplined Time Frequency Standard (DTF) shown in figure 7. The device has the capability of being slaved to an external frequency standard. Upon loss of the external signal, the internal digital memory circuits hold the frequency of the internal quartz oscillator constant. The portable unit can operate on internal batteries and thus transport time and frequency to a remote location. With SC-cut quartz crystals g-sensitivity is $<3 \times 10^{-10}/g$ in the worst axis, and typically $\pm 1.5 \times 10^{-10}/g$ in other axes. Aging is a few parts in 10^{-11}/day. In mobile environments (i.e., ships, aircraft, land vehicles) it is important that low g-sensitivity crystals are used, to assure maintenance of lock during accelerations.

We don't need the entire DTF unit, so lets just lift some phase lock loop and memory modules, and SC-cut quartz oscillator and an optional phase correction circuit from the DTF. This latter circuit permits synchronization with negligible phase perturbation.

Marrying the various parts, out comes the triply-redundant precision time and frequency standard (see figure 8) with its backup Rubidium Frequency Standard, SC-cut Quartz Crystal Oscillator, and control circuits. Figure 9 shows the front panel of the Standard with status indicators and built-in circuit checks.

The time-of-day clock has been updated to a time-of-year clock, with the capability of providing time codes of optional formats. The clock can be set from an external NAVSTAR GPS Time Code and 1pps time mark. The clock is designed so that radiation-hardened logic components can be used, to operate through hostile military environments.

Key specifications of the Precision Time and Frequency Standard are presented in Table 1.

Redundancy.

Let me briefly describe how redundancy with glitch-free switching is accomplished: The simplified block diagram of the Cesium Frequency Standard is shown in figure 10. The Cesium loop acts as a Hi-Q frequency discriminator, locking the quartz oscillator to the Cesium atom transition frequency of 9.192^{+} GHz.

To build a triply-redundant frequency standard the dotted box is replaced with figure 11 which shows digital memory circuits consisting of comparators, counters, D/A converters and a Rubidium phase lock loop slaved to the Quartz oscillator output.

During normal operation, counter 1 is enabled, and the blocks between integrator and VCXO perform as an infinite memory unity gain element.

(a) In the event of a failure in Cesium:
Disable counter 1; Enable counter 2; Warm up Rubidium.

(b) After a 15 minute Rubidium warm up, the Rubidium is slaved to the Quartz oscillator; disable counter 2, making the Rubidium the backup frequency standard.

(c) Now, to lock the Quartz oscillator to the Rubidium frequency standard:

Switch comparator 1 input to Rubidium: enable counter 3 until comparator 1 input voltage from summer (Σ) equals Quartz control voltage; Disable counter 3; enable counter 1.

The Quartz oscillator is now disciplined to Rubidium, with no phase discontinuities, and the system is in the secondary (backup) mode.

During backup operation:

(a) If Rubidium frequency standard fails:
Disable counter 1, to cause the Quartz oscillator to hold frequency.
The system is now in the <u>tertiary</u> backup mode.

(b) If, instead, the Quartz oscillator fails:
Switch to the 5 MHz Rubidium Frequency Standard output.

The redundant operation is summarized in Table 2. The sinusoidal distribution and Time-of-Year (T.O.Y.) clock inputs and outputs are indicated in figure 12. Note the multiple sinusoidal and timing outputs.

<u>Time-of-Year Clock</u>.

The T.O.Y. clock contains a custom LSI Gate array and microprocessor-controlled time offset and time code generation. Because the code is generated in software, the code is easily customized by changing the programmable read only memory. Operating power is low to maximize battery operating time, if needed; and for application requiring it, the T.O.Y. clock is available with radiation-hardened logic.

Summary.

In summary, information about a rugged, militarized triply-redundant precision time and frequency standard that uses field-proven FEI devices has been presented. The Cesium Beam Resonator, Rubidium physics package, SC-cut Quartz crystal, and hybrid circuits are critical system elements that are fabricated and quality-controlled at Frequency Electronics. The unit can be modified to provide customized outputs. The versatile Time-of-Year microprocessor-controlled clock can provide optional time code formats with fiber optic or wire-transmission drivers, and with radiation-hardened logic elements, for applications having these requirements.

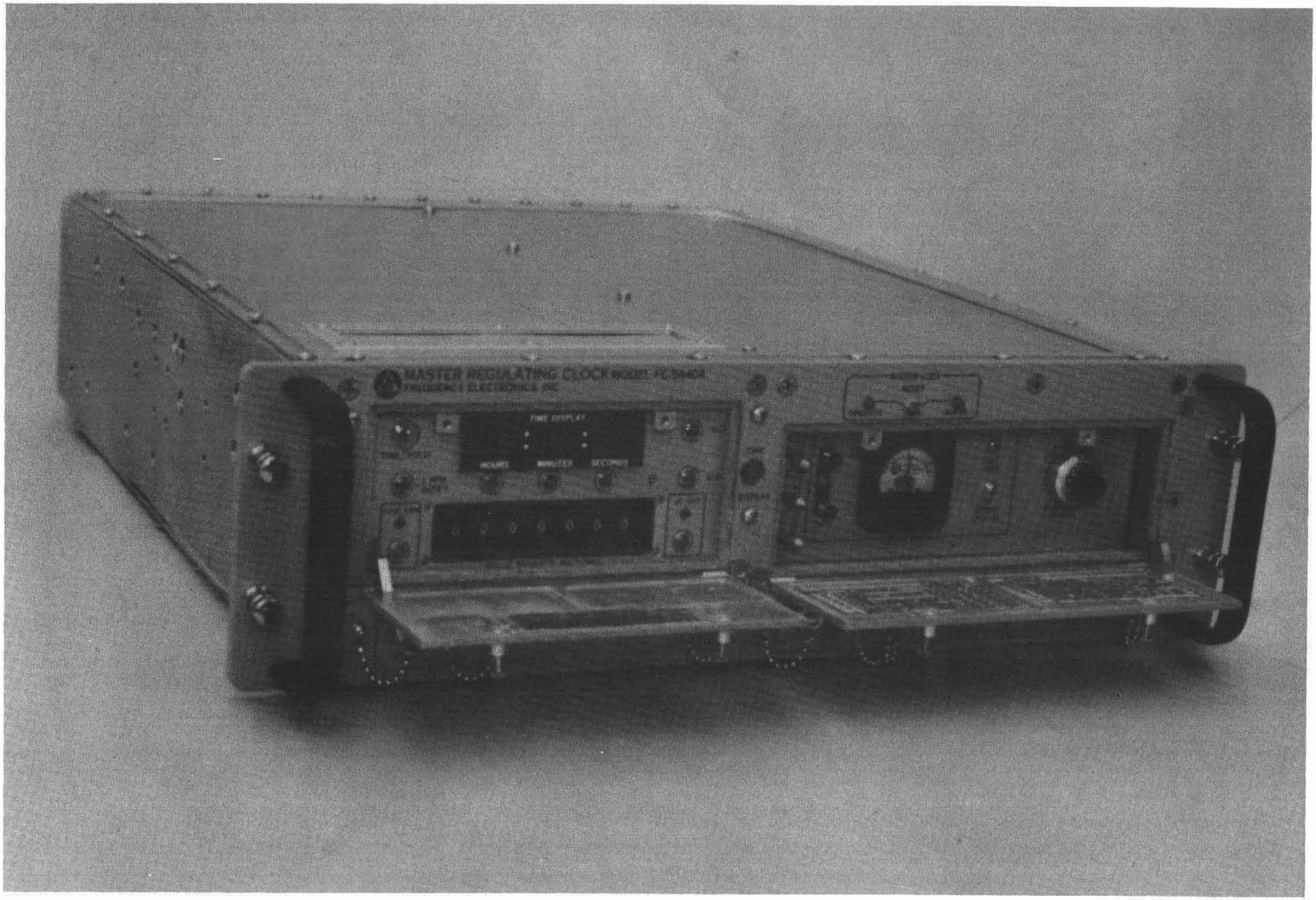

FIGURE 1

CESIUM FREQUENCY STANDARD, MODEL FE-5440A

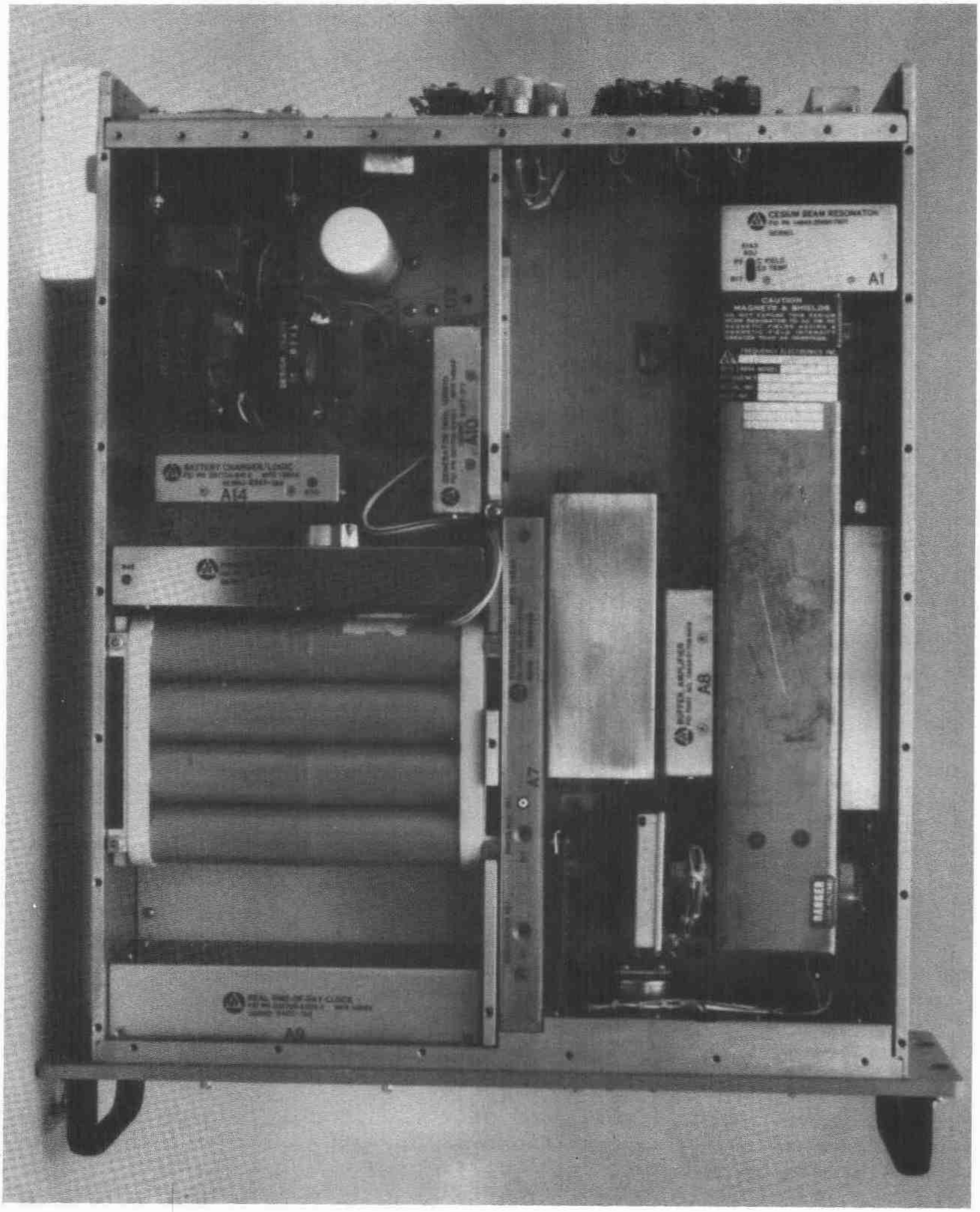

FIGURE 2

CESIUM FREQUENCY STANDARD

(TOP COVER REMOVED)

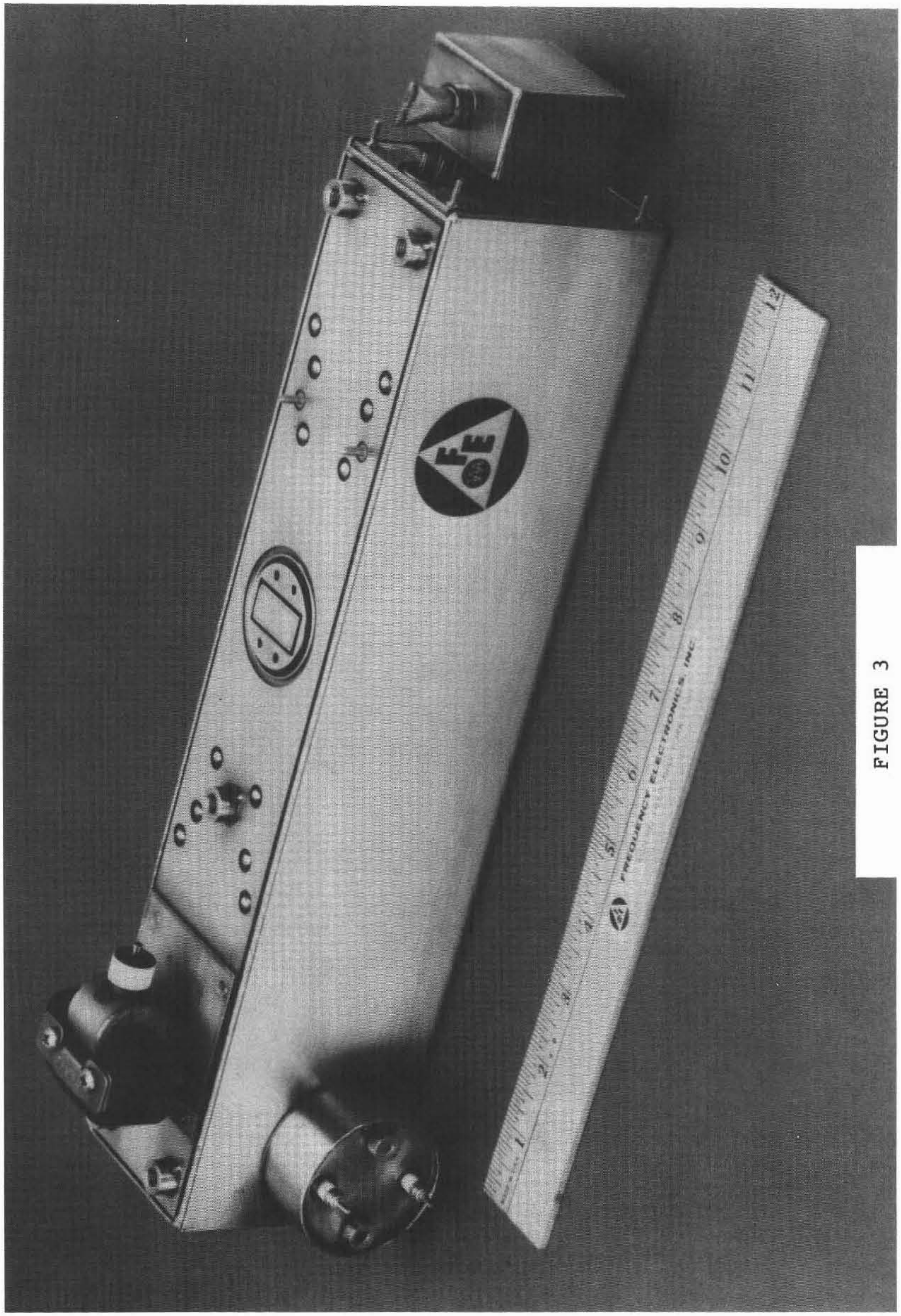

FIGURE 3

CESIUM BEAM RESONATOR

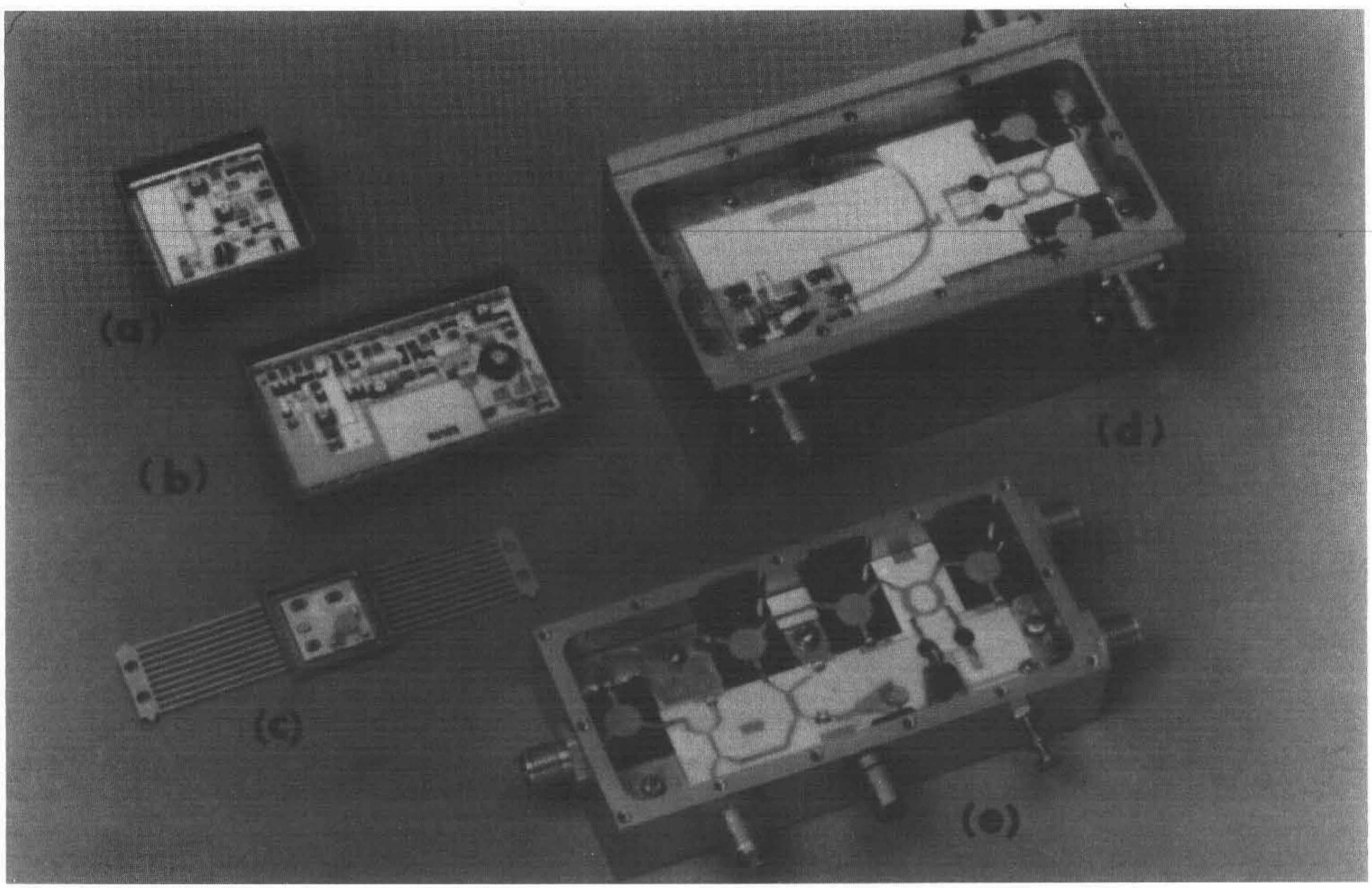

Thick Film Hybrids
- (a) 90 MHz to 180 MHz Multiplier/Driver
- (b) 5.115 MHz Multiplier/Amplifier

Thin Film Hybrids
- (c) 21 MHz Crystal Oscillator
- (d) "X" Band Up Converter
- (e) "C" Band Mixer-Coupler

FREQUENCY ELECTRONICS, INC.
Timekeeper for Outer Space

FIGURE 4

THICK AND THIN FILM HYBRIDS

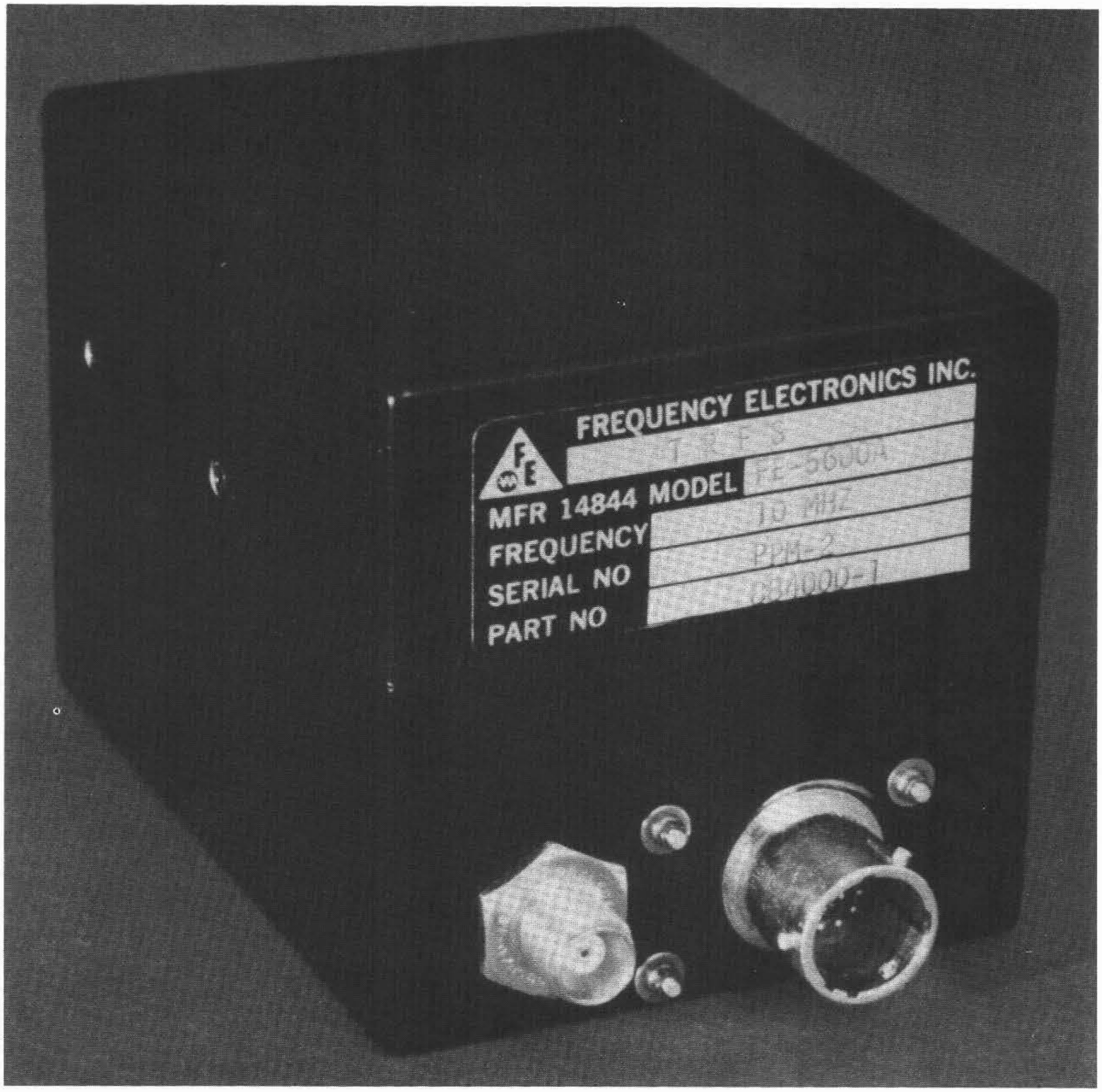

FIGURE 5

TACTICAL RUDIBIUM FREQUENCY STANDARD

(TRFS)

MODEL FE-5600A

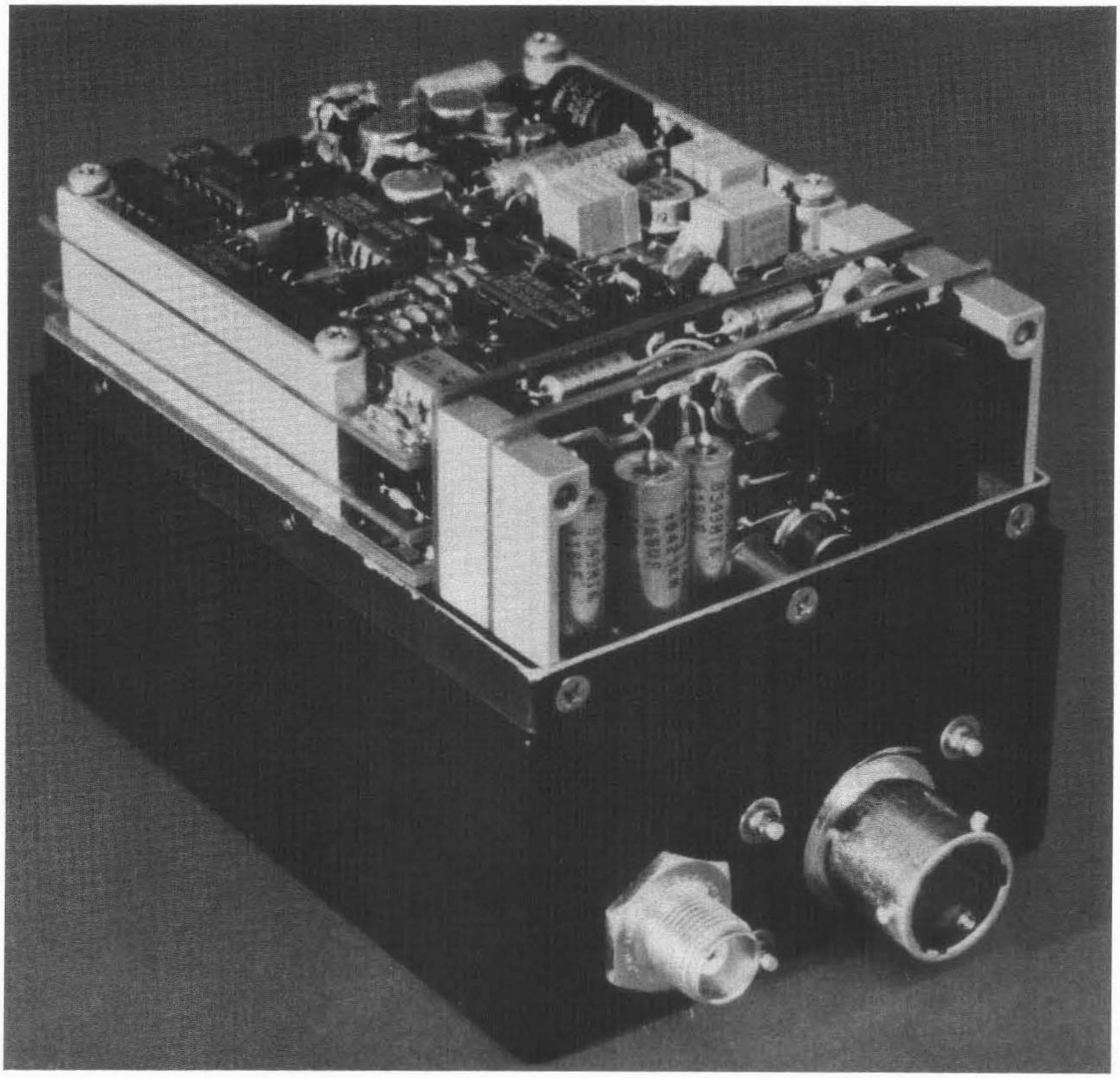

FIGURE 6

TACTICAL RUDIBIUM FREQUENCY STANDARD

(TRFS)

MODEL FE-5600A

FIGURE 7

DISCIPLINED TIME FREQUENCY STANDARD

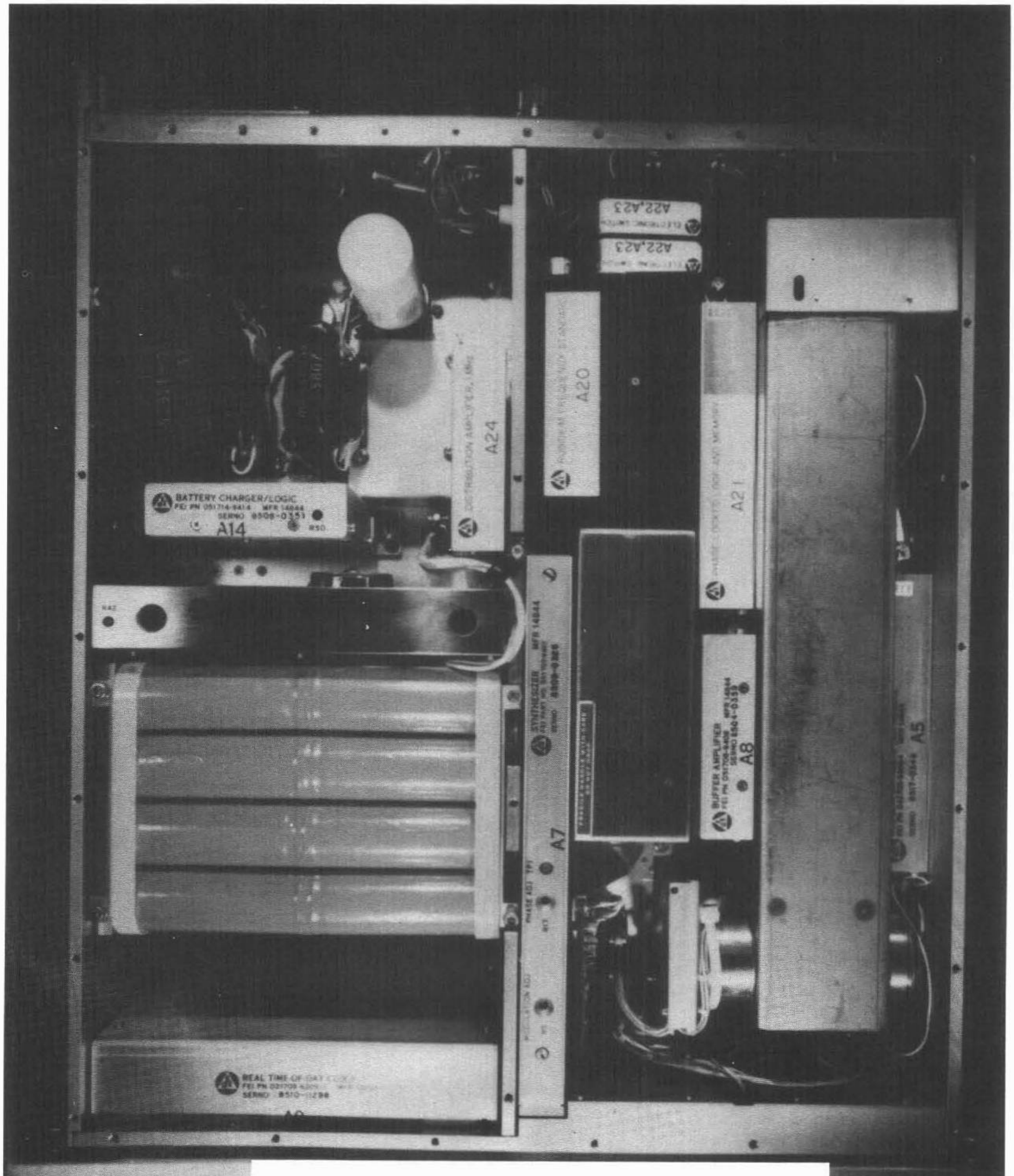

FIGURE 8

TRIPLY-REDUNDANT PRECISION TIME AND

FREQUENCY STANDARD (COVER REMOVED)

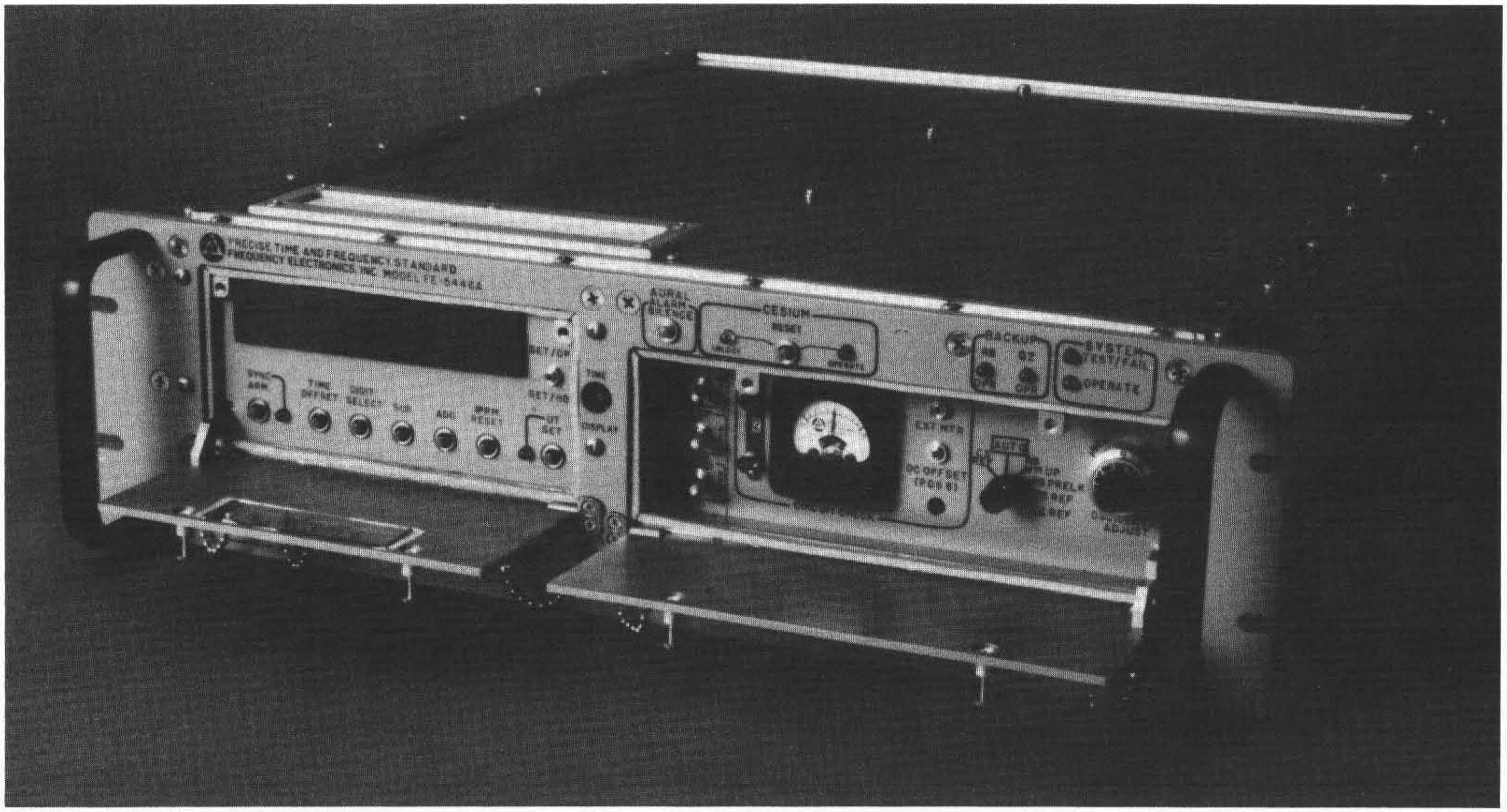

FIGURE 9

PRECISION TIME AND FREQUENCY

STANDARD MODEL FE-5446A

PRECISION TIME AND FREQUENCY STANDARD
MODEL FE-5446A

FEATURE	CAPABILITY	SOURCE INSTRUMENT *
• LONG-TERM STABILITY	$1X10^{-11}$ PRIMARY MODE $1X10^{-11}$/MONTH BACKUP MODE $1X10^{-11}$/DAY TERTIARY MODE	MRC RFS & DTF MRC & DTF
• SHORT-TERM STABILITY (>10 SECONDS)	$<3X10^{-11}/\sqrt{\tau}$	MRC
• SSB PHASE NOISE 1Hz BW	-150 DBc > 1 KHZ FROM SIGNAL	MRC & DTF
• SINUSOIDAL OUTPUTS	5 MHZ, 1 MHZ @ 13 DBM	MRC
• SWITCHING OF OPR MODES	AUTOMATIC, GLITCH-FREE (<.0016 DEGREE)	DTF
• TIMING SIGNALS	1 PPS, 1 PPM, SERIAL BCD TIME-OF-YEAR WITH OPTIONAL FORMATS AND TRANSMISSION LINE DRIVERS (RS-232C, RS-422A, RS-423A, OPTICAL)	MRC
• POWER SOURCES	AC, DC, INTERNAL BTRY	MRC
• CIRCUIT MONITORING	BUILT-IN METERING & STATUS LED'S	MRC & DTF

* MRC - MASTER REGULATING CLOCK MODEL FE-5440A
RFS - RUBIDIUM FREQUENCY STANDARD, MODEL FE-5600A
DTF - DISCIPLINED TIME FREQUENCY STANDARD, MODEL FE-1050A

TABLE 2

REDUNDANCY SEQUENCING
FOR PRECISION TIME AND FREQUENCY STANDARD, MODEL FE-5446A

EVENT	OPERATION
NO FAILURES	• CESIUM LOOP ENERGIZED, RUBIDIUM OFF PRIMARY MODE
CESIUM LOOP FAILS	• QZ OSC. HOLDS FREQUENCY DURING 15 MIN. RUBIDIUM WARMUP. • RUBIDIUM DISCIPLINED TO QZ OSC. FREQUENCY • RUBIDIUM HOLDS FREQUENCY WHILE PHASE CORRECTION IS MADE • QZ OSC. DISCIPLINED TO RUBIDIUM FREQUENCY SECONDARY (BACKUP) MODE
RUBIDIUM FREQUENCY STD FAILS	• QZ OSC. HOLDS FREQUENCY TERTIARY (BACKUP) MODE
QZ FAILS WHILE DISCIPLINED TO RUBIDIUM FREQUENCY STD.	• RUBIDIUM SUPPLIES OUTPUT FREQUENCY VIA RF SWITCH (NOT GLITCH-FREE) A FOURTH BACKUP

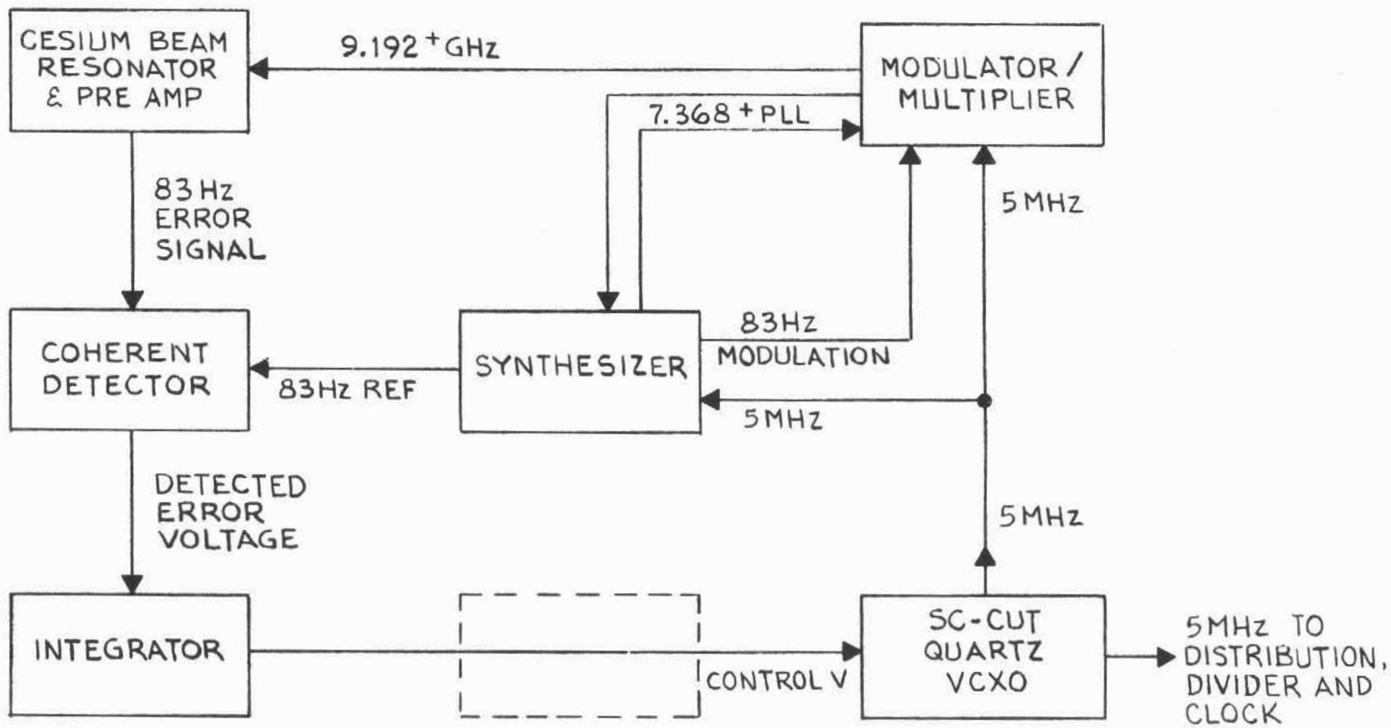

FIGURE 10

PRIMARY LOOP-CESIUM FREQUENCY STANDARD

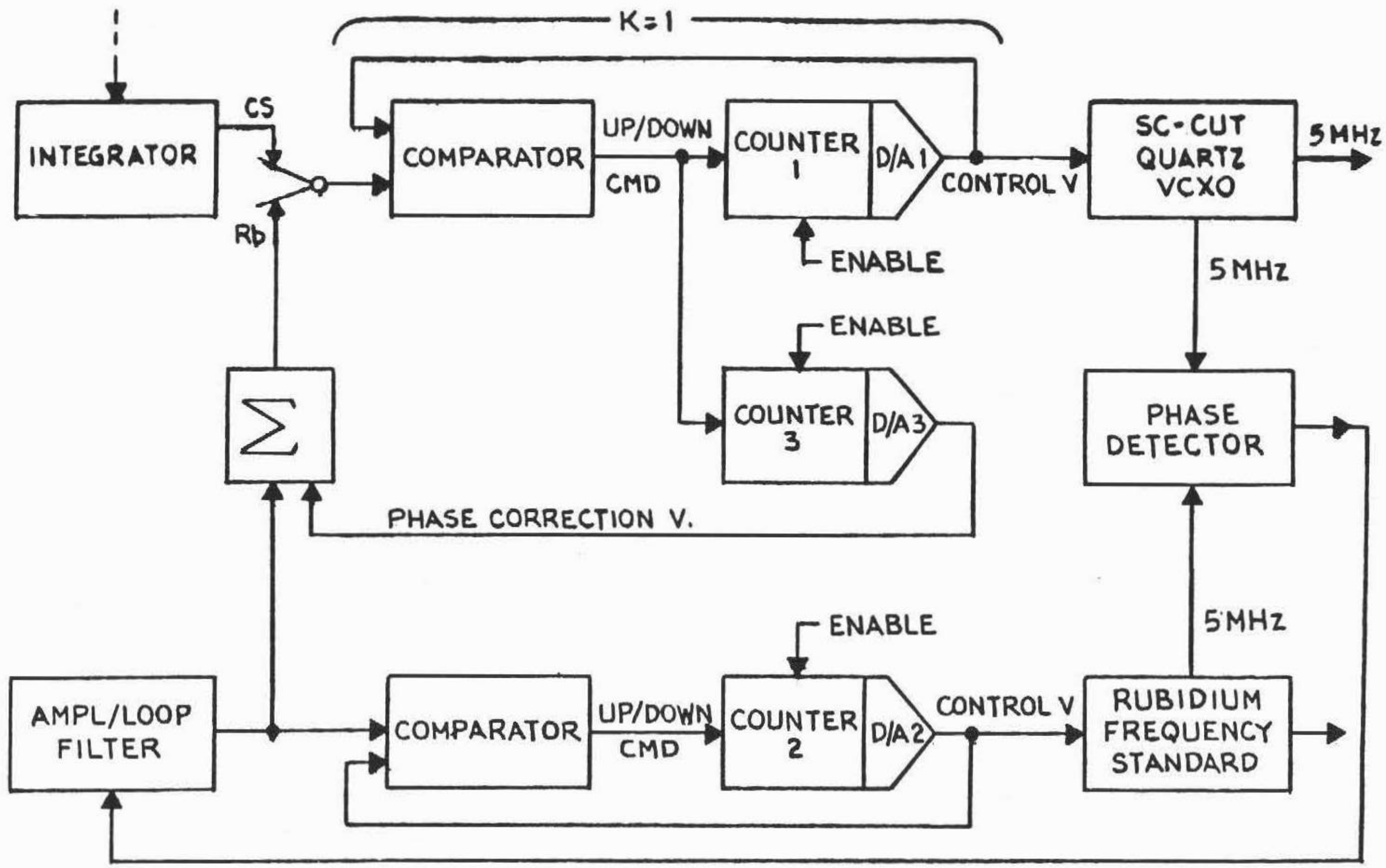

FIGURE 11

RUBIDIUM PHASE LOCK LOOP & MEMORY CIRCUIT
BACKUP LOOP

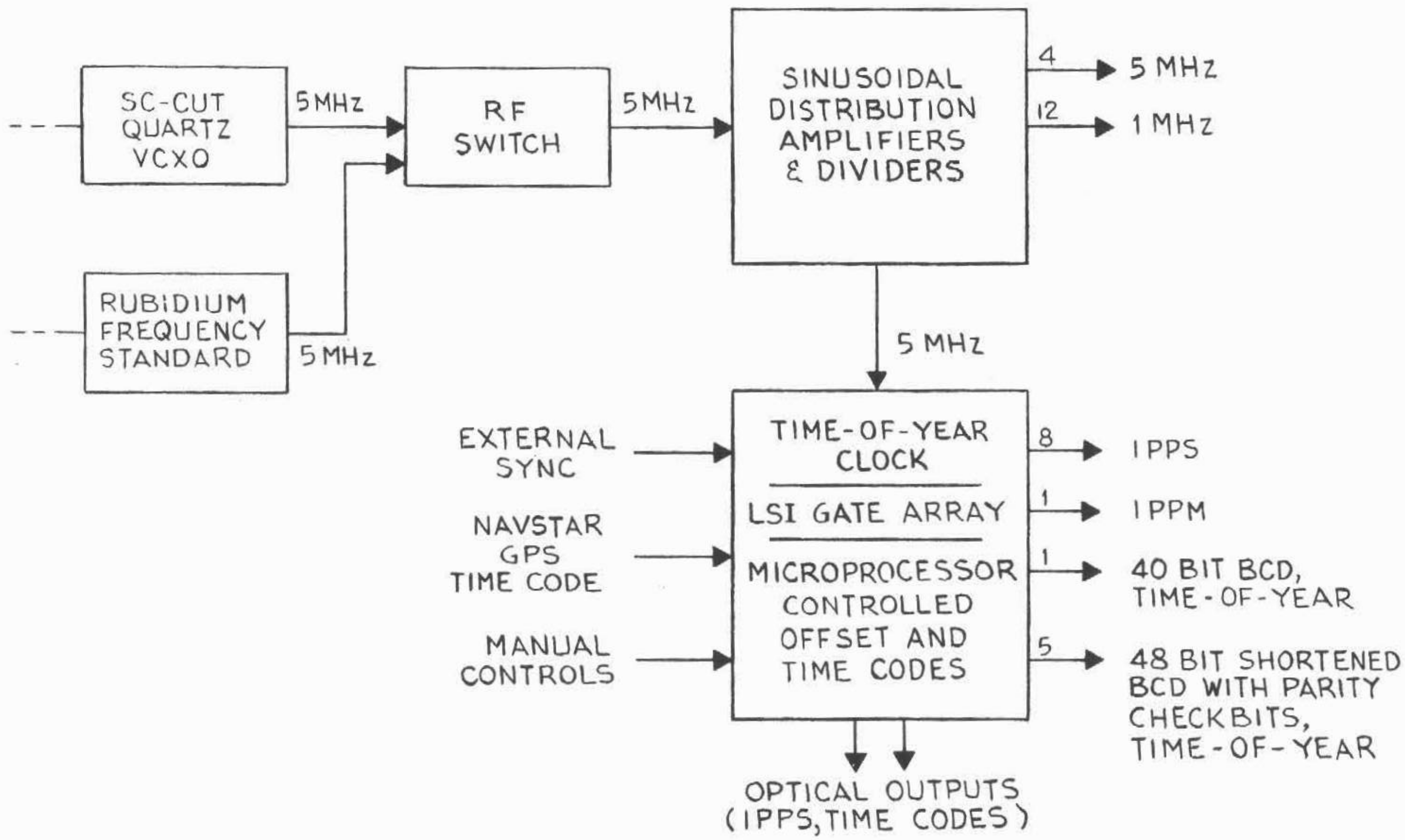

FIGURE 12

SINUSOIDAL DISTRIBUTION & TIME-OF-YEAR CLOCK

QUESTIONS AND ANSWERS

Andy Johnson, Naval Observatory: Could you replace your rubidium with another cesium in that loop?

Mr. Silvermetz: Certainly it could be done externally. In this particular package where we had space available inside the MRC (Master Regulating Clock) it fitted itself very nicely to our rubidium standard with some other circuitry from out disciplined time and frequency standard.

Albert Kirk, Jet Propulsion Laboratory: You have an up– down–counter in your feedback loop. At what rate does that counter run?

Mr. Silvermetz: We are using a sixteen bit D/A converter which runs at 32 kHz. That is the clocking rate.

Mr. Kirk: Do you have any data on the spurious signals on the 5MHz output?

Mr. Silvermetz: We have made measurements using our phase measuring instruments and have not been able to see any difference. I bypassed it, I left it in and could see no difference.

Report Documentation Page

Form Approved
OMB No. 0704-0188

1. REPORT DATE **DEC 1987**	2. REPORT TYPE	3. DATES COVERED **00-00-1987 to 00-00-1987**
4. TITLE AND SUBTITLE **Triply-Redundant Precision Time and Frequency Standard**		5a. CONTRACT NUMBER
		5b. GRANT NUMBER
		5c. PROGRAM ELEMENT NUMBER
6. AUTHOR(S)		5d. PROJECT NUMBER
		5e. TASK NUMBER
		5f. WORK UNIT NUMBER
7. PERFORMING ORGANIZATION NAME(S) AND ADDRESS(ES) **Frequency Electronics, Inc,55 Charles Lindbergh Blvd,Mitchell Field,NY,11553**		8. PERFORMING ORGANIZATION REPORT NUMBER
9. SPONSORING/MONITORING AGENCY NAME(S) AND ADDRESS(ES)		10. SPONSOR/MONITOR'S ACRONYM(S)
		11. SPONSOR/MONITOR'S REPORT NUMBER(S)

12. DISTRIBUTION/AVAILABILITY STATEMENT
Approved for public release; distribution unlimited

13. SUPPLEMENTARY NOTES
Proceedings of the Nineteenth Annual Precise Time and Time Interval (PTTI) Applications and Planning Meeting, Redondo Beach, CA, 1-3 Dec 1987

14. ABSTRACT
see report

15. SUBJECT TERMS

16. SECURITY CLASSIFICATION OF:			17. LIMITATION OF ABSTRACT	18. NUMBER OF PAGES	19a. NAME OF RESPONSIBLE PERSON
a. REPORT **unclassified**	b. ABSTRACT **unclassified**	c. THIS PAGE **unclassified**	**Same as Report (SAR)**	**20**	

B-204483, APR 5, 1982

B-204483, APR 5, 1982

DIGEST: 1. GAO WILL NOT QUESTION CONTRACTING AGENCY'S SOLE-SOURCE AWARD WHERE AGENCY HAS SHOWN THAT TIME WAS OF THE ESSENCE AND ONLY ONE KNOWN SOURCE COULD MEET ITS NEEDS WITHIN THE TIMEFRAME REQUIRED. 2. CONTRACTING AGENCY SHOULD ENSURE THAT PROTESTER AND OTHER POTENTIAL SUPPLIERS ARE GIVEN OPPORTUNITY TO HAVE THEIR EQUIPMENT FULLY TESTED AND HAVE OPPORTUNITY TO PARTICIPATE IN COMPETITIVE PROCUREMENT WHICH AGENCY PROPOSES TO SCHEDULE.

FREQUENCY ELECTRONICS, INC.:

FREQUENCY ELECTRONICS, INC. (FEI), PROTESTS THE AWARD OF A CONTRACT TO HEWLETT-PACKARD COMPANY (HPC) ON A SOLE-SOURCE BASIS UNDER REQUEST FOR PROPOSALS (RFP) NO. N00039-81-R-0587, ISSUED BY THE NAVAL ELECTRONICS SYSTEMS COMMAND (NAVY).

THE RFP SOLICITED 37 "CESIUM BEAM FREQUENCY STANDARDS" (CBFS) WITH AN OPTION FOR TWO ADDITIONAL UNITS. ACCORDING TO THE NAVY, THE CBFS IS USED AS THE "PRIMARY TIME AND FREQUENCY REFERENCE FOR THE VERDIN DIGITAL DATA COMMUNICATION SYSTEM - A VERY LOW FREQUENCY/LOW FREQUENCY SHORE-TO-SHIP AND AIR-TO-SHIP COMMUNICATIONS SYSTEM THAT SUPPORTS THE SECURE COMMAND AND CONTROL REQUIREMENTS OF THE SUBMARINE FORCES AND SUPPORT ELEMENTS." FEI ARGUES THAT THE NAVY HAD NO BASIS TO PROCURE THESE ITEMS ON A SOLE-SOURCE BASIS SINCE FEI IS ALSO ALLEGEDLY CAPABLE OF SUPPLYING EQUIPMENT THAT WILL MEET THE NAVY'S MINIMUM NEEDS. FEI WANTS THE NAVY TO CONDUCT A COMPETITIVE PROCUREMENT FOR THESE ITEMS.

WE FIND THAT, UNDER THE CIRCUMSTANCES, THE NAVY WAS JUSTIFIED IN AWARDING A SOLE-SOURCE CONTRACT TO HPC, BUT WE RECOMMEND THAT THE NAVY TAKE THE STEPS IT HAS OUTLINED IN ITS REPORT ON THE PROTEST TO ENSURE THAT FUTURE PROCUREMENTS ARE CONDUCTED ON A COMPETITIVE BASIS.

HPC IS THE ORIGINAL DEVELOPER AND THE ONLY NAVY-APPROVED PRODUCER OF THE CBFS MODEL WHICH THE NAVY REQUIRES. HPC'S EQUIPMENT WAS CHOSEN AFTER A TECHNICAL COMPETITION AND HAS BEEN USED BY THE NAVY SINCE 1974. ACCORDING TO THE NAVY, HPC'S EQUIPMENT HAS PASSED THE REQUIRED "SHOCK, VIBRATION, ENVIRONMENTAL, RELIABILITY, AND MAINTAINABILITY TESTS," WAS SUBJECTED TO FOLLOW-ON TESTING IN JULY 1979, AND MEETS THE REQUIREMENTS OF THE APPLICABLE MILITARY SPECIFICATION - MIL-F-28811(EC) - DETERMINED BY THE NAVY TO REFLECT ITS MINIMUM NEEDS.

FEI ARGUES THAT ITS CBFS WILL MEET THE NAVY'S NEEDS AND PASS ALL NECESSARY TESTS. ACCORDING TO FEI, IN JANUARY 1981, IT OFFERED TO SUBMIT ITS CBFS TO THE NAVY FOR TESTING, BUT THE NAVY TURNED DOWN FEI'S REQUEST. FEI POINTS OUT THAT IT HAS SUPPLIED A SIMILAR CBFS TO THE AIR FORCE AND THAT PRIOR TO THE PRODUCT'S ACCEPTANCE, THIS CBFS WAS FULLY TESTED BY THE AIR FORCE. FEI FURTHER STATES THAT IT IS WILLING TO PROVIDE THE NAVY WITH AN ADDITIONAL NUMBER OF UNITS IN ORDER TO EXPEDITE THE NAVY'S TESTING PROCESS. FEI ALSO NOTES THAT HPC HAS INFORMED THE NAVY THAT IT WILL SOON STOP PRODUCING CBFS'S.IN FEI'S OPINION, ALL THESE FACTORS TAKEN TOGETHER INDICATE THAT THE NAVY HAD NO REASONABLE BASIS FOR THE SOLE-SOURCE AWARD.

PRIOR TO THE SUBMISSION OF ITS PROTEST REPORT TO OUR OFFICE, THE NAVY AWARDED A CONTRACT TO HPC ON THE GROUNDS THAT, DUE TO THE URGENCY OF THE REQUIREMENT, THE BEST INTERESTS OF THE GOVERNMENT WOULD NOT BE SERVED BY DELAYING THE AWARD UNTIL THE PROTEST WAS RESOLVED. THUS, AN AWARD TO HPC WAS MADE ON SEPTEMBER 30, 1981.

AS TO THE MERITS OF FEI'S PROTEST, THE NAVY MAINTAINS THAT THE SOLE SOURCE AWARD TO HPC WAS JUSTIFIED SINCE FEI HAS FAILED TO SHOW THAT THIS DECISION WAS UNREASONABLE. ACCORDING TO THE NAVY, THERE WAS INADEQUATE TIME TO CONDUCT NECESSARY TESTS ON FEI'S EQUIPMENT, DESPITE FEI'S OFFER TO PROVIDE AN ADDITIONAL NUMBER OF UNITS IN ORDER TO SPEED UP THE TESTING PROCESS. THE NAVY FURTHER NOTES THAT THE MODEL (FE 5440A) FEI HAS FURNISHED THE AIR FORCE DIFFERS FROM THE MODEL (FE 5440A, OPTION "F") THAT IT INTENDS TO FURNISH THE NAVY. MOREOVER, THE NAVY POINTS OUT THAT THE TESTS WHICH THE AIR FORCE CONDUCTED ON FEI'S EQUIPMENT ALSO DIFFER FROM THE TESTS REQUIRED BY THE NAVY. FOR EXAMPLE, THE NAVY REQUIRES A "FIXED- LENGTH RELIABILITY TEST" THAT TOTALS 9,750 HOURS, WHILE UNDER THE AIR FORCE'S FIRST ARTICLE TESTING THE TEST IS A "MEAN-TIME-BETWEEN-FAILURES" TEST WHICH ONLY REQUIRES TESTING FOR 500 HOURS.

THE NAVY ACKNOWLEDGES THAT HPC INTENDS TO STOP PRODUCING CBFS'S IN THE NEAR FUTURE. BECAUSE OF THIS DEVELOPMENT, THE NAVY STATES THAT IT HAS FORMULATED A COMPETITIVE PROCUREMENT SCHEDULE WHICH IT PLANS TO IMPLEMENT DURING THE CURRENT FISCAL YEAR FOR APPROXIMATELY 60 TO 80 CBFS'S REPRESENTING THE NEEDS OF FUTURE YEARS. ACCORDING TO THE NAVY, THERE WILL BE SUFFICIENT TIME UNDER THIS PROPOSED PROCUREMENT FOR ALL REQUIRED TESTING.

WE HAVE HELD THAT, BECAUSE OF THE REQUIREMENT FOR MAXIMUM PRACTICAL COMPETITION IN THE CONDUCT OF GOVERNMENT PROCUREMENTS, AGENCY DECISIONS TO PROCURE FROM A SOLE SOURCE MUST BE ADEQUATELY JUSTIFIED AND ARE SUBJECT TO CLOSE SCRUTINY. SUCH DECISIONS, HOWEVER, WILL BE UPHELD IF THERE IS A REASONABLE OR RATIONAL BASIS FOR THEM. EMI MEDICAL, INC.; PICKER CORPORATION, B-195487, FEBRUARY 6, 1980, 80-1 CPD 96.

WE HAVE ALSO HELD THAT THE DETERMINATION OF THE NEEDS OF THE GOVERNMENT AND THE BEST METHODS OF ACCOMMODATING THOSE NEEDS ARE PRIMARILY THE RESPONSIBILITY OF THE PROCURING AGENCIES. MORE SPECIFICALLY, WE HAVE RECOGNIZED THAT THE GOVERNMENT PROCUREMENT OFFICIALS, WHO ARE FAMILIAR WITH THE CONDITIONS UNDER WHICH SUPPLIES, EQUIPMENT, OR SERVICES HAVE BEEN USED IN THE PAST AND HOW THEY ARE TO BE USED IN THE FUTURE, ARE GENERALLY IN THE BEST POSITION TO KNOW THE GOVERNMENT'S ACTUAL NEEDS. CONSEQUENTLY, WE WILL NOT QUESTION AN AGENCY'S DETERMINATION OF ITS ACTUAL MINIMUM NEEDS UNLESS THERE IS A CLEAR SHOWING THAT THE DETERMINATION HAS NO REASONABLE BASIS. FENWAL, INC., B-202283, DECEMBER 15, 1981, 81-2 CPD 469.

WITH RESPECT TO THE NEED FOR A CONTRACTOR TO HAVE ITS PRODUCT QUALIFIED BEFORE THAT PRODUCT CAN BE CONSIDERED FOR AN AWARD, WE HAVE RECOGNIZED THAT THE RESPONSIBILITY FOR THE ESTABLISHMENT OF TESTS AND PROCEDURES NECESSARY TO DETERMINE PRODUCT ACCEPTABILITY IS WITHIN THE EXPERTISE OF THE CONTRACTING ACTIVITY. TYCO, B-199632, MARCH 24, 1981, 81-1 CPD 220. HOWEVER, AN AGENCY MAY NOT ARBITRARILY REFUSE TO TEST A FIRM'S PRODUCT, BUT MUST TAKE REASONABLE STEPS TO DETERMINE IF A PROPOSED ALTERNATE WILL SATISFY ITS MINIMUM NEEDS. SEE, E.G., CASTOLEUM CORPORATION, B-195724, NOVEMBER 29, 1979, 79-2 CPD 381.

AS INDICATED ABOVE, THE NAVY BASED ITS DECISION TO MAKE A SOLE SOURCE AWARD ON THE URGENCY OF THE REQUIREMENT AND THE FACT THAT, SINCE ITS EQUIPMENT WAS FULLY TESTED, ONLY HPC COULD MEET ITS NEED WITHIN THE REQUIRED TIME. WE HAVE HELD THAT A SOLE-SOURCE AWARD CAN BE JUSTIFIED ON THE GROUNDS THAT TIME IS OF THE ESSENCE AND ONLY THE KNOWN SOURCE CAN MEET THE REQUIRED TIMEFRAME, PROVIDED THAT THE AGENCY DEMONSTRATES THAT THESE CIRCUMSTANCES DO IN FACT EXIST. MCDONNELL DOUGLAS CORPORATION, B-202904, AUGUST 18, 1981, 81-2 CPD 154.

HERE, THE NAVY HAS PROVIDED US WITH A DETAILED BREAKDOWN OF WHERE EACH OF THE 39 CBFS'S WAS NEEDED. IT ARGUES THAT IF THESE UNITS ARE NOT DELIVERED WITHIN THE TIMEFRAME OF THE SOLE-SOURCE AWARD, THIS CIRCUMSTANCE WILL "ADVERSELY IMPACT ON VITAL NATIONAL DEFENSE PROGRAMS." FOR EXAMPLE, "TRIDENT SUBMARINES WILL BE PREVENTED FROM DEPLOYING," SUPPORT FOR THE "GLOBAL POSITIONING SATELLITE" PROGRAM WILL NOT BE PROVIDED AS REQUIRED, TRAINING IN PROPER OPERATION OF EQUIPMENT WILL BE DELAYED, AND SUBMARINE CONSTRUCTION AND OVERHAUL SCHEDULES WILL ALSO BE DELAYED.

IN EXPLAINING WHY QUALIFICATION OF FEI'S PRODUCT IN 1981 WOULD HAVE RESULTED IN UNACCEPTABLE DELAY, THE NAVY STATES THAT FEI'S OFFER OF PROVIDING EXTRA UNITS AS A MEANS OF SPEEDING UP THE TESTING PROCESS WOULD NOT HAVE BEEN MATERIALLY HELPFUL SINCE, REGARDLESS OF THE NUMBER OF UNITS AVAILABLE FOR THE RELIABILITY TEST, EACH UNIT HAD TO MEET THE MINIMUM TEST TIME OF 3 CALENDAR MONTHS, OR 2,500 TEST HOURS, "WHICH DOES NOT INCLUDE REPAIR AND RENTAL TIME"; MOREOVER, AN ADDITIONAL 30 DAYS WOULD HAVE BEEN REQUIRED FOR A "MAINTAINABILITY DEMONSTRATION." ALSO, THE NAVY INSISTS THAT IN ADDITION TO THIS TEST TIME, ADDITIONAL "ADMINISTRATIVE LEAD TIME WOULD HAVE BEEN REQUIRED TO GENERATE TEST PROCEDURE AND FEI WOULD HAVE HAD TO FABRICATE AND DELIVER THE REQUIRED UNITS WITH SPARE PARTS AND DOCUMENTATION TO SUPPORT THE TESTS."

THE NAVY ALSO INSISTS THAT THE AIR FORCE TESTING OF FEI'S SIMILAR MODEL TO AN "AIRBORNE" SPECIFICATION - MIL-E-5400 - CANNOT BE CONSIDERED TO BE AN ACCEPTABLE SUBSTITUTE FOR THE TESTING TO THE NAVY'S "SHIPBOARD-USE" SPECIFICATION - MIL-F-28811(EC); MOREOVER, THE NAVY STATES THAT THE "AIR FORCE HAS EXPERIENCED RELIABILITY PROBLEMS WITH FEI'S EQUIPMENT" AND THAT THE "AIR FORCE IS ATTEMPTING TO RESOLVE THESE DEFICIENCIES."

FINALLY, FEI ALLEGES THAT THE NAVY'S INITIAL PROTEST REPORT INDICATED THAT HPC'S EQUIPMENT HAD NOT BEEN FULLY TESTED UNTIL JULY 1979, EVEN THOUGH THE EQUIPMENT HAD BEEN USED SINCE 1975. HOWEVER, IN ITS SUPPLEMENTAL PROTEST REPORT, THE NAVY MAINTAINS THAT IT NEVER MEANT TO IMPLY THAT HPC'S EQUIPMENT WAS USED BEFORE IT WAS FULLY TESTED TO MIL-F- 28811(EC). ACCORDING TO THE NAVY, FIRST ARTICLE TESTING TO THE SPECIFICATION ON HPC'S EQUIPMENT WAS COMPLETED IN APRIL 1975 AND THE MOST RECENT FOLLOW-ON TESTING ON HPC'S EQUIPMENT WAS CONDUCTED IN JULY 1979. IN VIEW OF THIS EXPLANATION, WE SEE NO NEED TO CONSIDER THIS ISSUE FURTHER.

IN VIEW OF THE FOREGOING, WE CANNOT QUESTION THE NAVY'S JUSTIFICATION FOR ITS SOLE-SOURCE AWARD TO HPC ON THE GROUNDS THAT TIME WAS OF THE ESSENCE AND ONLY ONE KNOWN SOURCE - HPC - COULD MEET ITS NEEDS WITHIN THE REQUIRED TIMEFRAME. MCDONNELL DOUGLAS CORPORATION, SUPRA. SPECIFICALLY, WE CANNOT QUESTION THE NAVY'S POSITION THAT DELIVERY "SCHEDULE CONSTRAINTS FOR CRITICAL NEAR-TERM CBFS UNITS PREVENTED THE NAVY" - GIVEN THE PROJECTED TIME AND UNCERTAINTIES INVOLVED IN FABRICATING AND IN TESTING FEI'S PRODUCT - FROM ACCEPTING FEI'S JANUARY 1981 QUALIFICATION TEST OFFER.

NEVERTHELESS, WE NOTE THAT THE NAVY PLANS TO IMPLEMENT A COMPETITIVE PROCUREMENT SCHEDULE IN THE NEAR FUTURE WHICH WILL PROVIDE ADEQUATE TIME FOR TESTING. WE ALSO NOTE THAT ANOTHER FIRM HAS EXPRESSED AN INTEREST IN PARTICIPATING IN ANY FUTURE PROCUREMENT. THEREFORE, THE NAVY SHOULD ENSURE, AS MUCH AS PRACTICAL, THAT ALL POTENTIAL SOURCES OF CBFS'S ARE NOTIFIED OF THE UPCOMING PROCUREMENT AND ARE GIVEN AN OPPORTUNITY TO HAVE THEIR EQUIPMENT TESTED IF THEY WISH.

PROTEST DENIED.

SLCET-TR-88-1 (Rev. 8.5.2.2) AD-M001251

Quartz Crystal Resonators and Oscillators

For Frequency Control and Timing Applications - A Tutorial

March 2004

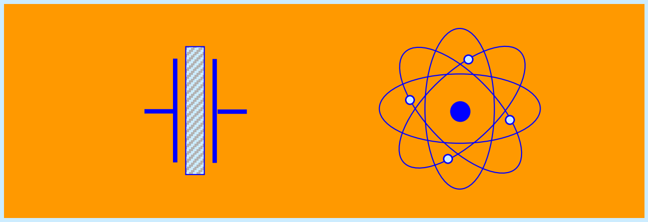

John R. Vig
US Army Communications-Electronics Research, Development & Engineering Center
Fort Monmouth, NJ, USA
J.Vig@IEEE.org

Approved for public release.
Distribution is unlimited

-

"QUARTZ CRYSTAL RESONATORS AND OSCILLATORS
For Frequency Control and Timing Applications - A TUTORIAL"
Rev. 8.5.1.2, by John R. Vig, July 2001, AD-M001251.

NOTICES

Disclaimer

The findings in this report are not to be construed as an official Department of the Army position, unless so designated by other authorized documents.

The citation of trade names and names of manufacturers in this report is not to be construed as official Government endorsement or consent or approval of commercial products or services referenced herein.

-

Table of Contents

-

Preface

Why This Tutorial?

"Everything should be made as simple as possible - but not simpler," said Einstein. The main goal of this "tutorial" is to assist with presenting the most frequently encountered concepts in frequency control and timing, as simply as possible.

I have often been called upon to brief visitors, management, and potential users of precision oscillators, and have also been invited to present seminars, tutorials, and review papers before university, IEEE, and other professional groups. In the beginning, I spent a great deal of time preparing these presentations. Much of the time was spent on preparing the slides. As I accumulated more and more slides, it became easier and easier to prepare successive presentations.

I was frequently asked for "hard-copies" of the slides, so I started organizing, adding some text, and filling the gaps in the slide collection. As the collection grew, I began receiving favorable comments and requests for additional copies. Apparently, others, too, found this collection to be useful. Eventually, I assembled this document, the "Tutorial".

This is a work in progress. I plan to include new material, including additional notes. Comments, corrections, and suggestions for future revisions will be welcome.

John R. Vig

-

Notes and References

In the PowerPoint version of this document, notes and references can be found in the "Notes" of most of the pages. To view the notes, use the "Notes Page View" icon (near the lower left corner of the screen), or select "Notes Page" in the View menu. In PowerPoint 2000 (and, presumably, later versions), the notes also appear in the "Normal view".

To print a page so that it includes the notes, select Print in the File menu, and, near the bottom, at "Print what:," select "Notes Pages".

The HTML version can be viewed with a web browser (best viewed at 1024 x 768 screen size). The notes then appear in the lower pane on the right.

Many of the references are to IEEE publications that are available online in the IEEE UFFC-S digital archive, www.ieee-uffc.org/archive or in IEEE Xplore, http://www.ieee.org/ieeexplore .

IEEE Xplore**,** <http://www.ieee.org/ieeexplore>, provides full-text access to IEEE transactions, journals, magazines and conference proceedings published since 1988 and to all current IEEE standards. Access to tables of contents of IEEE transactions, journals, magazines, conference is free to all. IEEE members can search and access all IEEE abstract/citation records and more...

CHAPTER 1
Applications and Requirements

1

Quartz for the National Defense Stockpile, Report of the Committee on Cultured Quartz for the National Defense Stockpile, National Materials Advisory Board Commission on Engineering and Technical Systems, National Research Council, NMAB-424, National Academy Press, Washington, D.C., 1985.

J. R. Vig, "Military Applications of High Accuracy Frequency Standards and Clocks," IEEE Transactions on Ultrasonics, Ferroelectrics, and Frequency Control, Vol. 40, pp. 522-527, 1993.

Electronics Applications of Quartz Crystals

Military & Aerospace
- Communications
- Navigation
- IFF
- Radar
- Sensors
- Guidance systems
- Fuzes
- Electronic warfare
- Sonobouys

Research & Metrology
- Atomic clocks
- Instruments
- Astronomy & geodesy
- Space tracking
- Celestial navigation

Industrial
- Communications
- Telecommunications
- Mobile/cellular/portable radio, telephone & pager
- Aviation
- Marine
- Navigation
- Instrumentation
- Computers
- Digital systems
- CRT displays
- Disk drives
- Modems
- Tagging/identification
- Utilities
- Sensors

Consumer
- Watches & clocks
- Cellular & cordless phones, pagers
- Radio & hi-fi equipment
- Color TV
- Cable TV systems
- Home computers
- VCR & video camera
- CB & amateur radio
- Toys & games
- Pacemakers
- Other medical devices

Automotive
- Engine control, stereo, clock
- Trip computer, GPS

Quartz for the National Defense Stockpile, Report of the Committee on Cultured Quartz for the National Defense Stockpile, National Materials Advisory Board Commission on Engineering and Technical Systems, National Research Council, NMAB-424, National Academy Press, Washington, D.C., 1985.

Frequency Control Device Market

(as of ~2001)

Technology	Units per year	Unit price, typical	Worldwide market, $/year
Quartz Crystal	~ 2 x 10^9	~$1 ($0.1 to 3,000)	~$1.2B
Atomic Frequency Standards (see chapter 6)			
Hydrogen maser	~ 10	$200,000	$2M
Cesium beam frequency standard	~ 500	$50,000	$25M
Rubidium cell frequency standard	~ 60,000	$2,000	$120M

The units per year are estimates based on informal surveys of industry leaders. The numbers are probably accurate to better than a factor of two.

Navigation

Precise time is essential to precise navigation. Historically, navigation has been a principal motivator in man's search for better clocks. Even in ancient times, one could measure latitude by observing the stars' positions. However, to determine longitude, the problem became one of timing. Since the earth makes one revolution in 24 hours, one can determine longitude form the time difference between local time (which was determined from the sun's position) and the time at the Greenwich meridian (which was determined by a clock):

Longitude in degrees = (360 degrees/24 hours) x t in hours.

In 1714, the British government offered a reward of 20,000 pounds to the first person to produce a clock that allowed the determination of a ship's longitude to 30 nautical miles at the end of a six week voyage (i.e., a clock accuracy of three seconds per day). The Englishman John Harrison won the competition in 1735 for his chronometer invention.

Today's electronic navigation systems still require ever greater accuracies. As electromagnetic waves travel 300 meters per microsecond, e.g., if a vessel's timing was in error by one millisecond, a navigational error of 300 kilometers would result. In the Global Positioning System (GPS), atomic clocks in the satellites and quartz oscillators in the receivers provide nanosecond-level accuracies. The resulting (worldwide) navigational accuracies are about ten meters (see chapter 8 for further details about GPS).

Dava Sobel, Longitude, Walker & Co., New York, 1995

Commercial Two-way Radio

Historically, as the number of users of commercial two-way radios have grown, channel spacings have been narrowed, and higher-frequency spectra have had to be allocated to accommodate the demand. Narrower channel spacings and higher operating frequencies necessitate tighter frequency tolerances for both the transmitters and the receivers. In 1940, when only a few thousand commercial broadcast transmitters were in use, a 500 ppm tolerance was adequate. Today, the oscillators in the many millions of cellular telephones (which operate at frequency bands above 800 MHz) must maintain a frequency tolerance of 2.5 ppm and better. The 896-901 MHz and 935-940 MHz mobile radio bands require frequency tolerances of 0.1 ppm at the base station and 1.5 ppm at the mobile station.

The need to accommodate more users will continue to require higher and higher frequency accuracies. For example, a NASA concept for a personal satellite communication system would use walkie-talkie-like hand-held terminals, a 30 GHz uplink, a 20 GHz downlink, and a 10 kHz channel spacing. The terminals' frequency accuracy requirement is a few parts in 10^8.

R. Kinsman and D. Gunn, "Frequency Control Requirements for 800 MHz Land Mobile Communication," Proc. 35th Ann. Symp. Frequency Control, pp. 501-510, 1981.

Digital Processing of Analog Signals

The Effect of Timing Jitter

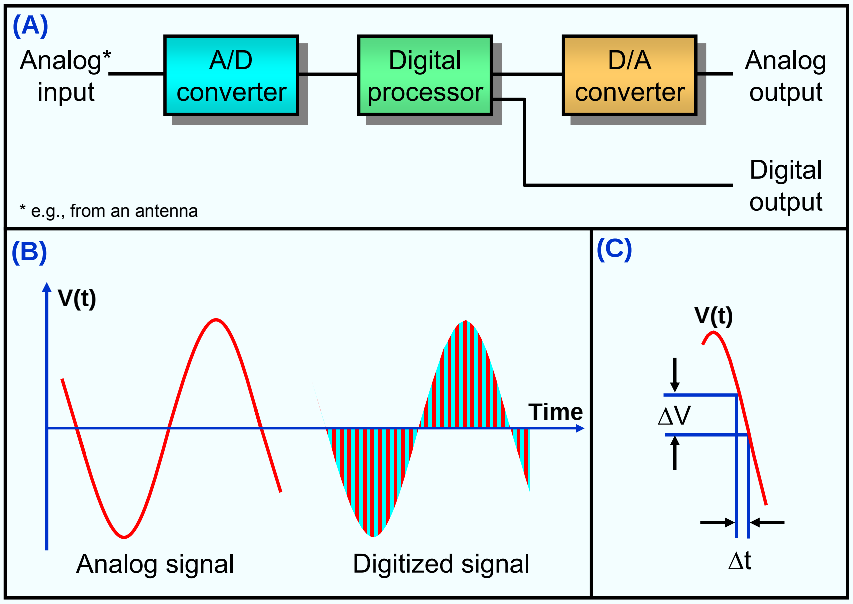

1-5

As microprocessor and digital signal processing (DSP) chips become more and more capable, the digital processing of analog signals, as illustrated in (A) above, becomes more and more advantageous and feasible. Among the advantages of digital (vs. analog) processing are that, in digital systems, many functions may be integrated on a chip (e.g., filtering, differentiation, integration, linearization, modulation, and computation), systems can be easily and inexpensively duplicated and reprogrammed, and systems do not depend on strict component tolerances.

Before an analog signal can processed, however, the signal must be converted into digital form. An analog-to-digital (A/D) converter (also abbreviated ADC) samples the analog signal at (usually) equal intervals of time, and converts the analog signal into a sequence of digitized values (i.e., the analog signal is sampled, measured, then converted into quantized numerical values), as illustrated in (B) above.

One of the sources of error in ADCs is jitter, i.e., the uncertainty in the time the signal was sampled. As shown in (C), an error Δt in the time of the sampling causes an error ΔV in the measured value of the signal. The higher the resolution (number of bits) and the speed of the ADC, the smaller the allowable jitter. At GHz frequencies, some 16 bit ADC clock jitter requirements are a few femtoseconds.

Phase noise of the oscillator that drives the clock is one of the sources of timing jitter. The oscillator's contribution to jitter is the integral of the phase noise, L(f), usually from 10 Hz to ~30 MHz.

J. A. Wepman, "Analog-to-Digital Converters and Their Applications in Radio Receivers," IEEE Communications Magazine, pp. 39-45, May 1995.

R. J. Lackey and D. W Upmal, "Speakeasy: The Military Software Radio," IEEE Communications Magazine, pp. 56-61, May 1995.

Digital Network Synchronization

- Synchronization plays a critical role in digital telecommunication systems. It ensures that information transfer is performed with minimal buffer overflow or underflow events, i.e., with an acceptable level of "slips." Slips cause problems, e.g., missing lines in FAX transmission, clicks in voice transmission, loss of encryption key in secure voice transmission, and data retransmission.

- In AT&T's network, for example, timing is distributed down a hierarchy of nodes. A timing source-receiver relationship is established between pairs of nodes containing clocks. The clocks are of four types, in four "stratum levels."

Stratum	Accuracy (Free Running) Long Term	Per 1st Day	Clock Type	Number Used
1	1×10^{-11}	N.A.	GPS W/Two Rb	16
2	1.6×10^{-8}	1×10^{-10}	Rb Or OCXO	~200
3	4.6×10^{-6}	3.7×10^{-7}	OCXO Or TCXO	1000's
4	3.2×10^{-5}	N.A.	XO	~1 million

J. E. Abate, E. W. Butterline, R. A. Carley, P. Greendyk, A. M. Montenegro, C. D. Near, S. H. Richman, and G. P. Zampetti, AT&T's New Approach to the Synchronization of Telecommunication Networks," IEEE Communications Magazine, pp. 35-45, April 1989.

J. Pan, "Present and Future of Synchronization in the US Telephone Network," IEEE Transactions on Ultrasonics, Ferroelectrics, and Frequency Control, Vol. UFFC-34, No. 6, pp. 629-638, November 1987.

P. Kartaschoff, "Synchronization in Digital Communications networks," Proc. IEEE, vol. 79, pp. 906-914, 1991.

Phase Noise in PLL and PSK Systems

The phase noise of oscillators can lead to erroneous detection of phase transitions, i.e., to bit errors, when phase shift keyed (PSK) digital modulation is used. In digital communications, for example, where 8-phase PSK is used, the maximum phase tolerance is ±22.5°, of which ±7.5° is the typical allowable carrier noise contribution. Due to the statistical nature of phase deviations, if the RMS phase deviation is 1.5°, for example, the probability of exceeding the ±7.5° phase deviation is 6×10^{-7}, which can result in a bit error rate that is significant in some applications.

Shock and vibration can produce large phase deviations even in "low noise" oscillators. Moreover, when the frequency of an oscillator is multiplied by N, the phase deviations are also multiplied by N. For example, a phase deviation of 10^{-3} radian at 10 MHz becomes 1 radian at 10 GHz. Such large phase excursions can be catastrophic to the performance of systems, e.g., of those which rely on phase locked loops (PLL) or phase shift keying (PSK). Low noise, acceleration insensitive oscillators are essential in such applications.

1-7

See the acceleration effects section in chapter 4 for further information about acceleration induced noise and phase excursions.

J. E. Abate, E. W. Butterline, R. A. Carley, P. Greendyk, A. M. Montenegro, C. D. Near, S. H. Richman, and G. P. Zampetti, AT&T's New Approach to the Synchronization of Telecommunication Networks," IEEE Communications Magazine, pp. 35-45, April 1989.

J. Pan, "Present and Future of Synchronization in the US Telephone Network," IEEE Transactions on Ultrasonics, Ferroelectrics, and Frequency Control, Vol. UFFC-34, No. 6, pp. 629-638, November 1987.

P. Kartaschoff, “Synchronization in Digital Communications networks,” Proc. IEEE, vol. 79, pp. 906-914, 1991.

Utility Fault Location

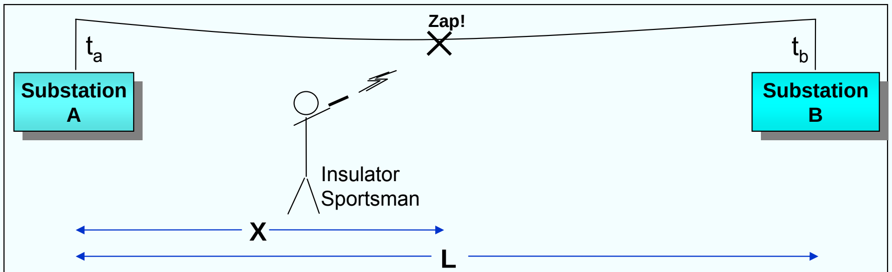

When a fault occurs, e.g., when a "sportsman" shoots out an insulator, a disturbance propagates down the line. The location of the fault can be determined from the differences in the times of arrival at the nearest substations:

$$x = 1/2[L - c(t_b - t_a)] = 1/2[L - c\Delta t]$$

where x = distance of the fault from substation A, L = A to B line length, c = speed of light, and t_a and t_b= time of arrival of disturbance at A and B, respectively.

Fault locator error = $x_{error}=1/2(c\Delta t_{error})$; therefore, if $\Delta t_{error} \leq 1$ microsecond, then $x_{error} \leq 150$ meters $\leq 1/2$ of high voltage tower spacings, so, the utility company can send a repair crew directly to the tower that is nearest to the fault.

1-8

Another application in the power industry is during “intermesh,” the period when power load is transferred between two substations. To avoid a power outage during an intermesh, it is necessary to precisely measure and adjust the phase (within 3 degrees), and also the voltage amplitude differences between the substations. Precise timing, GPS for example, can serve as an absolute time reference for measuring the phases at two widely separated substations. In 1 microsecond, the phase of a 60 Hz waveform advances ~0.2 degree, thus allowing the relative phases to be controlled to well within the required accuracy.

M. A. Street, "Delivery and Application of Precise Timing for a Traveling Wave Powerline Fault Locator System," Proc. 22nd Ann. Precise Time and Time Interval (PTTI) Applications and Planning Meeting, pp. 355-360, 1990, NTIS accession no. N91-25755/0

R. E. Wilson, “Use of Precise Time and Frequency in Power Systems,” Proc. IEEE, vol. 79, pp. 1009-1018, 1991.

P. Stergiou, “Keeping the Lights On - GPS and Power Grid Intermesh,” GPS World, November 2003.

Space Exploration

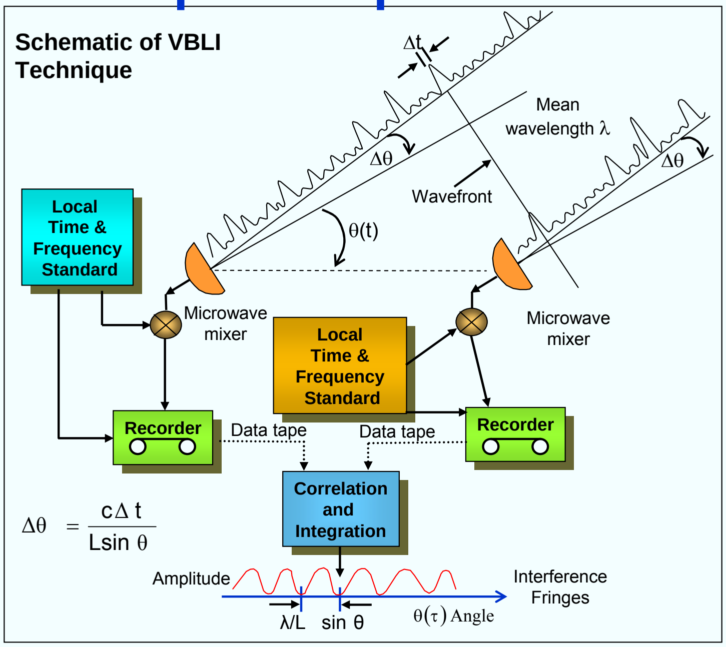

How does NASA know where a spacecraft is in deep space? The spacecraft's precise range, velocity and angular position are determined with the aid of highly stable frequency standards. The range is determined from the propagation time of microwave radiation between an antenna on Earth and the spacecraft. The velocity is determined from the "doppler," i.e., by comparing the phase of the incoming carrier signal with that of a reference signal generated from the ground station frequency standard. The angular position is determined by very long baseline interferometry (VLBI) in which widely separated stations (in California, Spain and Australia) simultaneously receive signals from the spacecraft. Differences between times of arrival coupled with knowledge of the baseline vectors joining the station antennas provide direct geometric determination of the angles between the baseline vectors and the direction to the spacecraft. Hydrogen masers (see chapter 6) provide the best stability (~10^{-15}) for the propagation times of interest, which typically range from minutes to hours. VLBI is also used for high resolution angular measurements in radioastronomy.

J. S. Border & E. R. Kursinski, "Deep Space Tracking and Frequency Standards," Proc. 45th Ann. Symp. on Frequency Control, pp. 594-607, 1991, IEEE Cat. No. 91CH2965-2.

R. F. C. Vessot, "Applications of Highly Stable Oscillators to Scientific Measurements," Proc. of the IEEE, pp. 1040-1053, 1991.

W. K. Klemperer, "Long-Baseline Radio Interferometry with Independent Frequency Standards," Proc. of the IEEE, vol. 60, pp. 602-609, 1972.

Military Requirements

Military needs are a prime driver of frequency control technology. Modern military systems require oscillators/clocks that are:

- Stable over a wide range of parameters (time, temperature, acceleration, radiation, etc.)
- Low noise
- Low power
- Small size
- Fast warmup
- Low life-cycle cost

1-10

J. R. Vig, "Military Applications of High Accuracy Frequency Standards and Clocks," IEEE Transactions on Ultrasonics, Ferroelectrics, and Frequency Control, Vol. 40, pp. 522-527, 1993.

Impacts of Oscillator Technology Improvements

- Higher jamming resistance & improved ability to hide signals
- Improved ability to deny use of systems to unauthorized users
- Longer autonomy period (radio silence interval)
- Fast signal acquisition (net entry)
- Lower power for reduced battery consumption
- Improved spectrum utilization
- Improved surveillance capability (e.g., slow-moving target detection, bistatic radar)
- Improved missile guidance (e.g., on-board radar vs. ground radar)
- Improved identification-friend-or-foe (IFF) capability
- Improved electronic warfare capability (e.g., emitter location via TOA)
- Lower error rates in digital communications
- Improved navigation capability
- Improved survivability and performance in radiation environment
- Improved survivability and performance in high shock applications
- Longer life, and smaller size, weight, and cost
- Longer recalibration interval (lower logistics costs)

J. R. Vig, "Military Applications of High Accuracy Frequency Standards and Clocks," IEEE Transactions on Ultrasonics, Ferroelectrics, and Frequency Control, Vol. 40, pp. 522-527, 1993.

Spread Spectrum Systems

- In a spread spectrum system, the transmitted signal is spread over a bandwidth that is much wider than the bandwidth required to transmit the information being sent (e.g., a voice channel of a few kHz bandwidth is spread over many MHz). This is accomplished by modulating a carrier signal with the information being sent, using a wideband pseudonoise (PN) encoding signal. A spread spectrum receiver with the appropriate PN code can demodulate and extract the information being sent. Those without the PN code may completely miss the signal, or if they detect the signal, it appears to them as noise.
- Two of the spread spectrum modulation types are: 1. direct sequence, in which the carrier is modulated by a digital code sequence, and 2. frequency hopping, in which the carrier frequency jumps from frequency to frequency, within some predetermined set, the order of frequencies being determined by a code sequence.
- Transmitter and receiver contain ***clocks*** which must be synchronized; e.g., in a frequency hopping system, the transmitter and receiver must hop to the same frequency at the same time. The faster the hopping rate, the higher the jamming resistance, and the more accurate the clocks must be (see the next page for an example).
- Advantages of spread spectrum systems include the following capabilities: 1. rejection of intentional and unintentional jamming, 2. low probability of intercept (LPI), 3. selective addressing, 4. multiple access, and 5. high accuracy navigation and ranging.

R. C. Dixon, Spread Spectrum Systems, John Wiley and Sons, New York, 1976.

D. L. Schilling, R. L. Pickholtz and L. B. Milstein, "Spread Spectrum Goes Commercial," IEEE Spectrum, Vol. 27, pp. 40-45, 1990.

Clock for Very Fast Frequency Hopping Radio

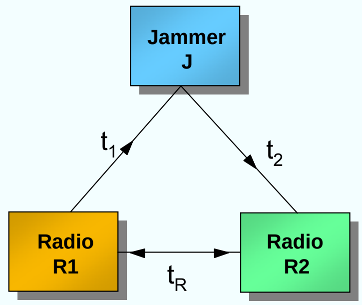

To defeat a "perfect" follower jammer, one needs a hop-rate given by:

$$\mathbf{t_m < (t_1 + t_2) - t_R}$$

where $t_m \approx$ message duration/hop $\approx$ 1/hop-rate

Example

Let R1 to R2 = 1 km, R1 to J =5 km, and J to R2 = 5 km. Then, since propagation delay =3.3 μs/km, $t_1 = t_2 = 16.5$ μs, $t_R = 3.3$ μs, and $t_m < 30$ μs. Allowed clock error $\approx 0.2\, t_m \approx 6$ μs.

For a 4 hour resynch interval, clock accuracy requirement is:

4×10^{-10}

1-13

With the availability of fast spectrum analyzers and synthesizers, it is possible to jam frequency hopping systems. If a jammer is fast enough, it can detect the frequency of transmission and tune the jammer to that frequency well before the radio hops to the next frequency. However, with a good enough clock, it is possible to defeat such "follower" jamming. As illustrated above, even a "perfect" follower jammer can be defeated if a good enough clock is available. (A perfect jammer is defined here as one that can identify the frequency of a received signal, tune a synthesizer to that frequency, and transmit the jamming signal in zero time.)

Because radio waves travel at the speed of light, the radio-to-jammer-to-radio (R1 to J to R2) and radio-to-radio (R1 to R2) propagation delays are 3.3 μs per km. Therefore, if the hopping rate is fast enough for the propagation delay difference to be greater than 1/hop-rate, i.e., if the radios can hop to the next frequency before the jamming signal reaches the receiver, then the radios are jamming-proof (for follower jammers). In the example above, the propagation delays t_1, t_2, and t_R imply that the message duration t_m be less than 30 μs. Since the clock accuracies required by frequency hopping systems are usually 10% to 20% of t_m, the allowed clock error is about 6 μs. In a military environment, such accuracies can be maintained for periods of hours and longer only with atomic clocks.

A. D. Robertson and F. C. Painter, "Tactical Jamming," Defense Science and Engineering, pp. 20-28, September 1985.

J. R. Vig, "Military Applications of High Accuracy Frequency Standards and Clocks," IEEE Transactions on Ultrasonics, Ferroelectrics, and Frequency Control, Vol. 40, pp. 522-527, 1993.

Clocks and Frequency Hopping C^3 Systems

Slow hopping ‹-------------------------------›Good clock

Fast hopping ‹------------------------------› Better clock

Extended radio silence ‹-----------------› Better clock

Extended calibration interval ‹----------› Better clock

Othogonality ‹-------------------------------› Better clock

Interoperability ‹----------------------------› Better clock

The faster the hopping rate, the higher the jamming resistance, and the more accurate the clocks must be. For example, for a system with a hopping rate of 1,000 hops per second, the dwell time at each frequency is 1 millisecond. For such a system to operate properly, the clocks must remain synchronized to about 100 microseconds.

When several radio nets operate in an area, self-jamming (also called co-site interference) can be a problem if the nets operate independently of one another, i.e., if the nets are not orthogonal. Radios of neighboring nets can then occasionally hop to the same frequency at the same time, thus producing self-jamming. When the nets are orthogonal, i.e., when the neighboring nets are synchronized and use codes that insure that radios do not hop to the same frequency at the same time, the radios must not only be synchronized within a net, but also to those of neighboring nets. This requires an even higher clock accuracy.

The requirement for C^3 systems to be interoperable places yet another stringent requirement on accuracy. For example, when an Army unit calls for air support from an Air Force unit that may be many hundreds of kilometers away, the clocks in the respective units' radios must be synchronized in order for the units to be able to communicate. Maintaining synchronization for extended periods among independent clocks that are widely separated requires very high quality clocks.

J. R. Vig, "Military Applications of High Accuracy Frequency Standards and Clocks," IEEE Transactions on Ultrasonics, Ferroelectrics, and Frequency Control, Vol. 40, pp. 522-527, 1993.

Identification-Friend-Or-Foe (IFF)

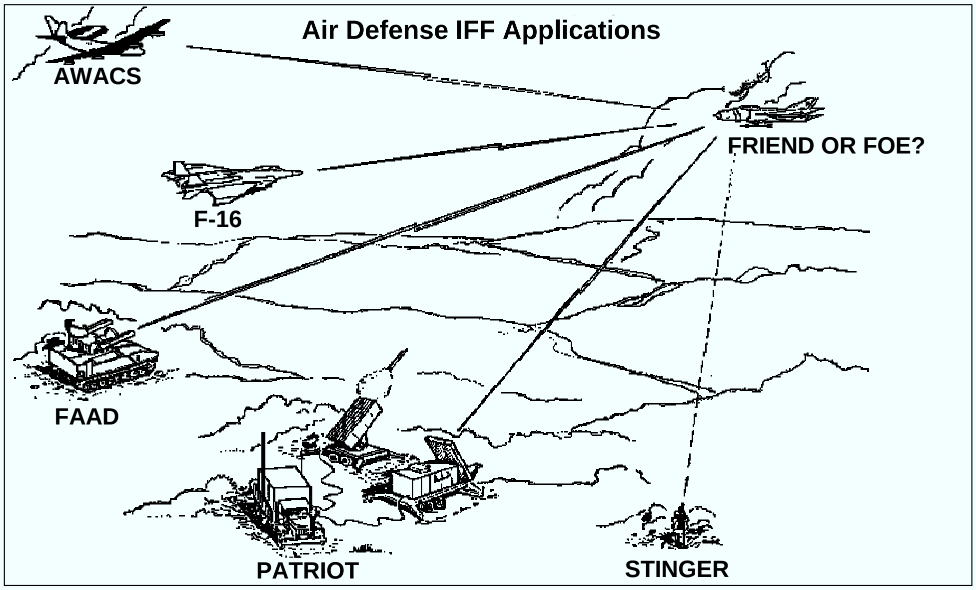

1-15

In a modern battle, when the sky is filled with friendly and enemy aircraft, and a variety of advanced weapons are ready to fire from both ground and airborne platforms, positive identification of friend and foe is critically important. For example fratricide due to identification errors has been a major problem in all 20th century wars.

Current IFF systems use an interrogation/response method which employs cryptographically encoded spread spectrum signals. The interrogation signal received by a friend is supposed to result in the "correct" code being automatically sent back via a transponder on the friendly platform. The "correct" code must change frequently to prevent a foe from recording and transmitting that code ("repeat jamming"), thereby appearing as a friend. The code is changed at the end of what is called the code validity interval (CVI).

The better the clock accuracy, the shorter can be the CVI, the more resistant the system can be to repeat jamming, and the longer can be the autonomy period for users who cannot resynchronize their clocks during a mission.

J. R. Vig, "Military Applications of High Accuracy Frequency Standards and Clocks," IEEE Transactions on Ultrasonics, Ferroelectrics, and Frequency Control, Vol. 40, pp. 522-527, 1993.

Effect of Noise in Doppler Radar System

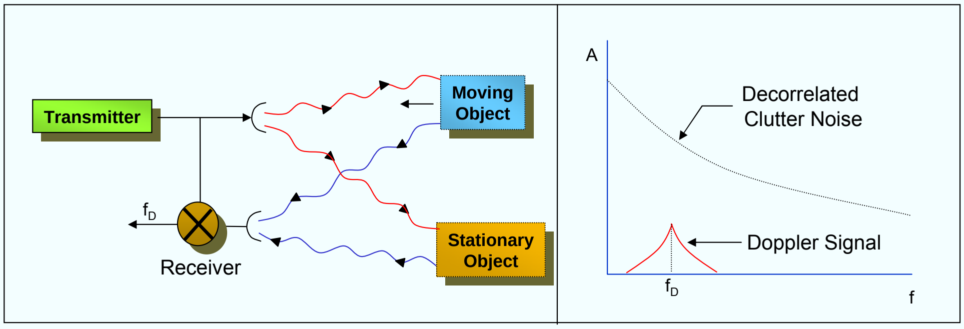

- Echo = Doppler-shifted echo from moving target + large "clutter" signal
- (Echo signal) - (reference signal) --› Doppler shifted signal from target
- Phase noise of the local oscillator modulates (decorrelates) the clutter signal, generates higher frequency clutter components, and thereby degrades the radar's ability to separate the target signal from the clutter signal.

1-16

Doppler radars, especially, require low-noise oscillators. The velocity of the target and the radar frequency are primary determinants of the phase noise requirements (see "Doppler Shifts" later in this chapter). Slow-moving targets produce small Doppler shifts, therefore, low phase-noise close to the carrier is required. To detect fast-moving targets, low noise far from the carrier is required. For example, when using an X-band radar to detect a 4 km/hour target (e.g., a slowly moving vehicle), the noise 70 Hz from the carrier is the important parameter, whereas to detect supersonic aircraft, the noise beyond 10 kHz is important.

When a radar is on a stationary platform, the phase noise requirements can usually be met with commercially available oscillators. A good quartz crystal (bulk acoustic wave, BAW) oscillator can provide sufficiently low noise close to the carrier, and a good surface acoustic wave (SAW) oscillator can provide sufficiently low noise far from the carrier. Very far from the carrier, dielectric resonator oscillators (DRO) can provide lower noise than either BAW or SAW oscillators. A combination of oscillators can be used to achieve good performance in multiple spectral regions, e.g., a DRO phase locked to a frequency-multiplied BAW oscillator can provide low noise both close to the carrier and far from the carrier.

The problem with achieving sufficiently low phase noise occurs when the radar platform vibrates, as is the case when the platform is an aircraft or a missile. The vibration applies time-dependent stresses to the resonator in the oscillator which results in modulation of the output frequency (see Chapter 4). The aircraft's random vibration, thereby, degrades the phase noise, and discrete frequency vibrations (e.g., due to helicopter blade rotation) produce spectral lines which can result in false target indications. The degradation in noise spectrum occurs in all types of oscillators (BAW, SAW, DRO, atomic frequency standards, etc.). A large phase-noise degradation can have catastrophic effects on radar performance. In a coherent radar, the platform-vibration-induced phase noise can reduce the probability of detection to zero.

Oscillator phase noise also affects the ability of a radar system to discern small targets located near large targets. Excess phase noise on local oscillators used to translate radar signals can limit the ability to detect smaller cross-section targets in both the doppler and range domains. Some radar systems also require the ability to coherently integrate radar-pulse returns on time scales of seconds to minutes.

M. I. Skolnik, Introduction to Radar Systems, Second Edition, McGraw-Hill Book Co., 1980.

D. B. Leeson, and G. F. Johnson,"Short-Term Stability for a Doppler Radar: Requirements, Measurements, and Techniques," Proc. of the IEEE, Vol. 54, No. 2, pp. 244-248, Feb. 1966.

Bistatic Radar

Conventional (i.e., "monostatic") radar, in which the illuminator and receiver are on the same platform, is vulnerable to a variety of countermeasures. Bistatic radar, in which the illuminator and receiver are widely separated, can greatly reduce the vulnerability to countermeasures such as jamming and antiradiation weapons, and can increase slow moving target detection and identification capability via "clutter tuning" (receiver maneuvers so that its motion compensates for the motion of the illuminator; creates zero Doppler shift for the area being searched). The transmitter can remain far from the battle area, in a "sanctuary." The receiver can remain "quiet."

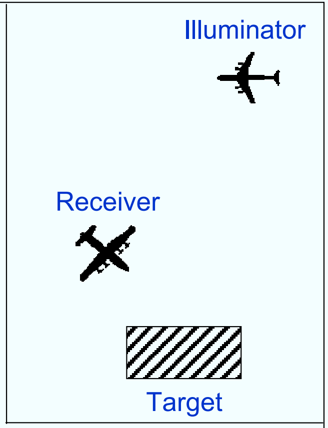

The timing and phase coherence problems can be orders of magnitude more severe in bistatic than in monostatic radar, especially when the platforms are moving. The reference oscillators must remain synchronized and syntonized during a mission so that the receiver knows when the transmitter emits each pulse, and the phase variations will be small enough to allow a satisfactory image to be formed. Low noise crystal oscillators are required for short term stability; atomic frequency standards are often required for long term stability.

1-17

Similar requirements exist in electronic warfare applications. The ability to locate radio and radar emitters is important in modern warfare. One method of locating emitters is to measure the time difference of arrival of the same signal at widely separated locations. Emitter location by means of this method depends on the availability of highly accurate clocks, and on highly accurate methods of synchronizing clocks that are widely separated. Since electromagnetic waves travel at the speed of light, 30 cm per nanosecond, the clocks of emitter locating systems must be kept synchronized to within nanoseconds in order to locate emitters with high accuracy. (Multipath and the geometrical arrangement of emitter locators usually results in a dilution of precision.) Without resynchronization, even the best available militarized atomic clocks can maintain such accuracies for periods of only a few hours. With the availability of GPS and using the "GPS common view" method of time transfer, widely separated clocks can be synchronized to better than 10 ns (assuming that GPS is not jammed). An even more accurate method of synchronization is "two-way time transfer via communication satellites," which, by means of very small aperture terminals (VSATs) and pseudonoise modems, can attain subnanosecond time transfer accuracies.

Another important application for low-noise frequency sources is the ELINT (ELectronic INTelligence) receiver. These receivers are used to search a broad range of frequencies for signals that may be emitted by a potential adversary. The frequency source must be as noise-free as possible so as not to obscure weak incoming signals. The frequency source must also be extremely stable and accurate in order to allow accurate measurement of the incoming signal's characteristics.

N. J. Willis, "Bistatic Radar," in Radar Handbook, M. I. Skolnik, editor, Chapter 25, Mc-Graw-Hill Publishing Co., 1990.

W. Lewandowski and C. Thomas, "GPS Time Transfer," *Proc. IEEE*, Vol. 79, pp. 991-1000, July 1991.

G. Lippermeier and R. Vernon, "IFFN: Solving the Identification Riddle," *Defense Electronics*, pp. 83-88, 1988.

Doppler Shifts

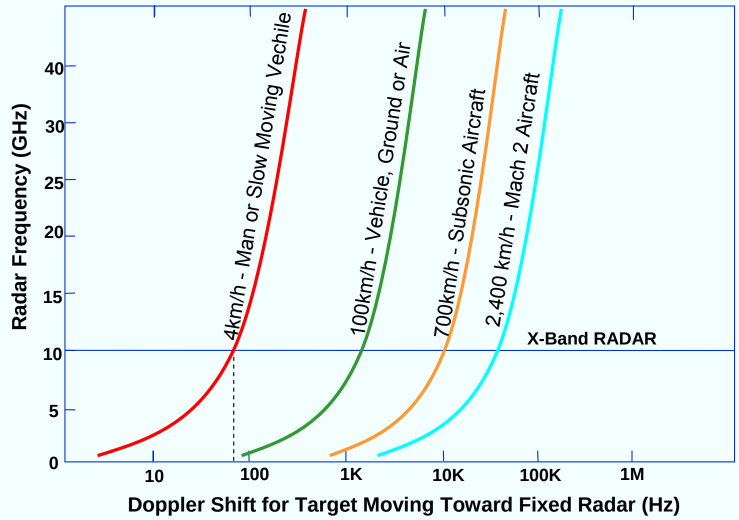

1-18

Doppler radars require low-phase-noise oscillators. The velocity of the target and the radar frequency are the primary factors that determine the oscillator noise requirements. For example, to detect slow-moving targets, the noise close to the carrier must be low.

The Doppler shift* of an object moving towards the observer is given by $\Delta f/f = 2v/c$, where Δf is the Doppler frequency shift, v is the velocity of the object, and c is the speed of light.

*** Doppler shift example**: if v = 4 km/h and f = 10 GHz (e.g., a slow-moving vehicle approaching an X-band radar), then Δf = 74 Hz, i.e., an oscillator with low phase noise at 74Hz from the carrier is necessary in order for a coherent radar system to "see" the vehicle.

CHAPTER 2
Quartz Crystal Oscillators

2

W. L. Smith, "Precision Oscillators," in E. A. Gerber and A. Ballato, Precision Frequency Control, Vol. 2, pp. 45-98, Academic Press, 1985.

B. Parzen, Design of Crystal and Other Harmonic Oscillators, John Wiley and Sons, Inc., 1983.

M. E. Frerking, "Temperature Control and Compensation," in E. A. Gerber and A. Ballato, Precision Frequency Control, Vol. 2, pp. 99-111, Academic Press, 1985.

M. E. Frerking, Crystal Oscillator Design and Temperature Compensation, Van Nostrand Reinhold Co., 1978.

Hewlett-Packard Co., Test & Measurement Application Notes
<http://www.tmo.hp.com/tmo/Notes/English/Oscillators.html>

"Fundamentals of Quartz Oscillators," Hewlett-Packard Application Note AN 200-2, Hewlett-Packard Company.

A. Benjaminson, "Computer-Aided Design of Crystal Oscillators," U. S. Army R & D Technical Report DELET-TR-84-0386-F, August 1985, AD-B096820;

"Advanced Crystal Oscillator Design," U. S. Army R & D Technical Report SLCET-TR-85-0445-F, January 1988, AD-B121288;

"Advanced Crystal Oscillator Design," U. S. Army R & D Technical Report SLCET-TR-88-0804-1, February 1989, AD-B134514;

"Advanced Crystal Oscillator Design," U. S. Army R & D Technical Report SLCET-TR-88-0804-F, December 1991, AD-B163808.

Crystal Oscillator

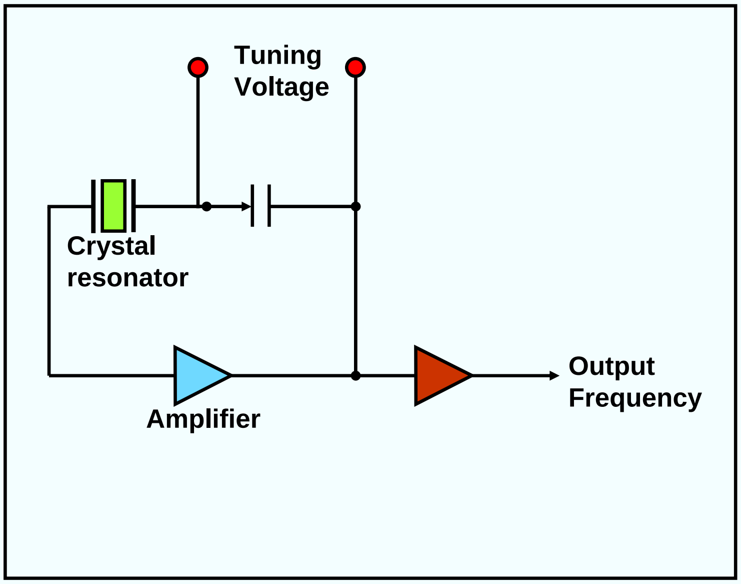

Above is a simplified circuit diagram that shows the basic elements of a crystal oscillator (XO). The amplifier of an XO consists of at least one active device, the necessary biasing networks, and may include other elements for band limiting, impedance matching, and gain control. The feedback network consists of the crystal resonator, and may contain other elements, such as a variable capacitor for tuning.

W. L. Smith, "Precision Oscillators," in E. A. Gerber and A. Ballato, Precision Frequency Control, Vol. 2, pp. 45-98, Academic Press, 1985.

B. Parzen, Design of Crystal and Other Harmonic Oscillators, John Wiley and Sons, Inc., 1983.

M. E. Frerking, "Temperature Control and Compensation," in E. A. Gerber and A. Ballato, Precision Frequency Control, Vol. 2, pp. 99-111, Academic Press, 1985.

M. E. Frerking, Crystal Oscillator Design and Temperature Compensation, Van Nostrand Reinhold Company, 1978.

"Fundamentals of Quartz Oscillators," Hewlett-Packard application note AN 200-2, Hewlett-Packard Company,
<http://www.tmo.hp.com/@@2ZcNpBcQ240oRhrt/tmo/Notes/English/5965-7662E.html>

Oscillation

- At the frequency of oscillation, the closed loop phase shift $= 2n\pi$.
- When initially energized, the only signal in the circuit is noise. That component of noise, the frequency of which satisfies the phase condition for oscillation, is propagated around the loop with increasing amplitude. The rate of increase depends on the excess; i.e., small-signal, loop gain and on the BW of the crystal in the network.
- The amplitude continues to increase until the amplifier gain is reduced either by nonlinearities of the active elements ("self limiting") or by some automatic level control.
- At steady state, the closed-loop gain = 1.

2-2

See "Decay Time, Linewidth, and Q" in chapter 3 for further information on oscillator startup time.

In addition to noise, switching on the DC power supply is another oscillation trigger.

W. L. Smith, "Precision Oscillators," in E. A. Gerber and A. Ballato, Precision Frequency Control, Vol. 2, pp. 45-98, Academic Press, 1985.

M. Toki and Y. Tsuzuki, "Analysis of Start-up Characteristics of CMOS Crystal Oscillators," Proc. 1992 IEEE Frequency Control Symposium, pp. 448-452, 1992.

Oscillation and Stability

- If a phase perturbation $\Delta\phi$ occurs, the frequency must shift Δf to maintain the $2n\pi$ phase condition, where $\Delta f/f=-\Delta\phi/2Q_L$ for a series-resonance oscillator, and Q_L is loaded Q of the crystal in the network. The "phase slope," $d\phi/df$ is proportional to Q_L in the vicinity of the series resonance frequency (also see "Equivalent Circuit" and "Frequency vs. Reactance" in Chapt. 3).

- Most oscillators operate at "parallel resonance," where the reactance vs. frequency slope, dX/df, i.e., the "stiffness," is inversely proportional to C_1, the motional capacitance of the crystal unit.

- For maximum frequency stability with respect to phase (or reactance) perturbations in the oscillator loop, the phase slope (or reactance slope) must be maximum, i.e., C_1 should be minimum and Q_L should be maximum. A quartz crystal unit's high Q and high stiffness makes it the primary frequency (and frequency stability) determining element in oscillators.

The importance of high Q is further discussed in chapter 3, see, especially, “What is Q and Why is it Important?”.

Tunability and Stability

Making an oscillator tunable over a wide frequency range degrades its stability because making an oscillator susceptible to intentional tuning also makes it susceptible to factors that result in unintentional tuning. The wider the tuning range, the more difficult it is to maintain a high stability. For example, if an OCXO is designed to have a short term stability of 1×10^{-12} for some averaging time and a tunability of 1×10^{-7}, then the crystal's load reactance must be stable to 1×10^{-5} for that averaging time. Achieving such stability is difficult because the load reactance is affected by stray capacitances and inductances, by the stability of the varactor's capacitance vs. voltage characteristic, and by the stability of the voltage on the varactor. Moreover, the 1×10^{-5} load reactance stability must be maintained not only under benign conditions, but also under changing environmental conditions (temperature, vibration, radiation, etc.).

Whereas a high stability, ovenized 10 MHz voltage controlled oscillator may have a frequency adjustment range of 5×10^{-7} and an aging rate of 2×10^{-8} per year, a wide tuning range 10 MHz VCXO may have a tuning range of 50 ppm and an aging rate of 2 ppm per year.

-

Oscillator Acronyms

- **XO…………..**Crystal Oscillator
- **VCXO………**Voltage Controlled Crystal Oscillator
- **OCXO………**Oven Controlled Crystal Oscillator
- **TCXO………**Temperature Compensated Crystal Oscillator
- **TCVCXO..…**Temperature Compensated/Voltage Controlled Crystal Oscillator
- **OCVCXO.….**Oven Controlled/Voltage Controlled Crystal Oscillator
- **MCXO………**Microcomputer Compensated Crystal Oscillator
- **RbXO……….**Rubidium-Crystal Oscillator

2-5

Historically, in the USA, military requirements have been the main impetus for research on crystal oscillators. The US Army sponsored most of the research, especially in the early days. According to folklore, the abbreviation XO instead of CO came about because, in the military, CO is the abbreviation for "commanding officer" and because "crystal" sounds a little like "xtal". (Later, someone pointed out that XO is the abbreviation for "executive officer" in the military, but by then, XO was generally accepted as the abbreviation for "crystal oscillator".)

Crystal Oscillator Categories

The three categories, based on the method of dealing with the crystal unit's frequency vs. temperature (f vs. T) characteristic, are:

- **XO, crystal oscillator,** does not contain means for reducing the crystal's f vs. T characteristic (also called PXO-packaged crystal oscillator).
- **TCXO, temperature compensated crystal oscillator,** in which, e.g., the output signal from a temperature sensor (e.g., a thermistor) is used to generate a correction voltage that is applied to a variable reactance (e.g., a varactor) in the crystal network. The reactance variations compensate for the crystal's f vs. T characteristic. Analog TCXO's can provide about a 20X improvement over the crystal's f vs. T variation.
- **OCXO, oven controlled crystal oscillator,** in which the crystal and other temperature sensitive components are in a stable oven which is adjusted to the temperature where the crystal's f vs. T has zero slope. OCXO's can provide a >1000X improvement over the crystal's f vs. T variation.

-

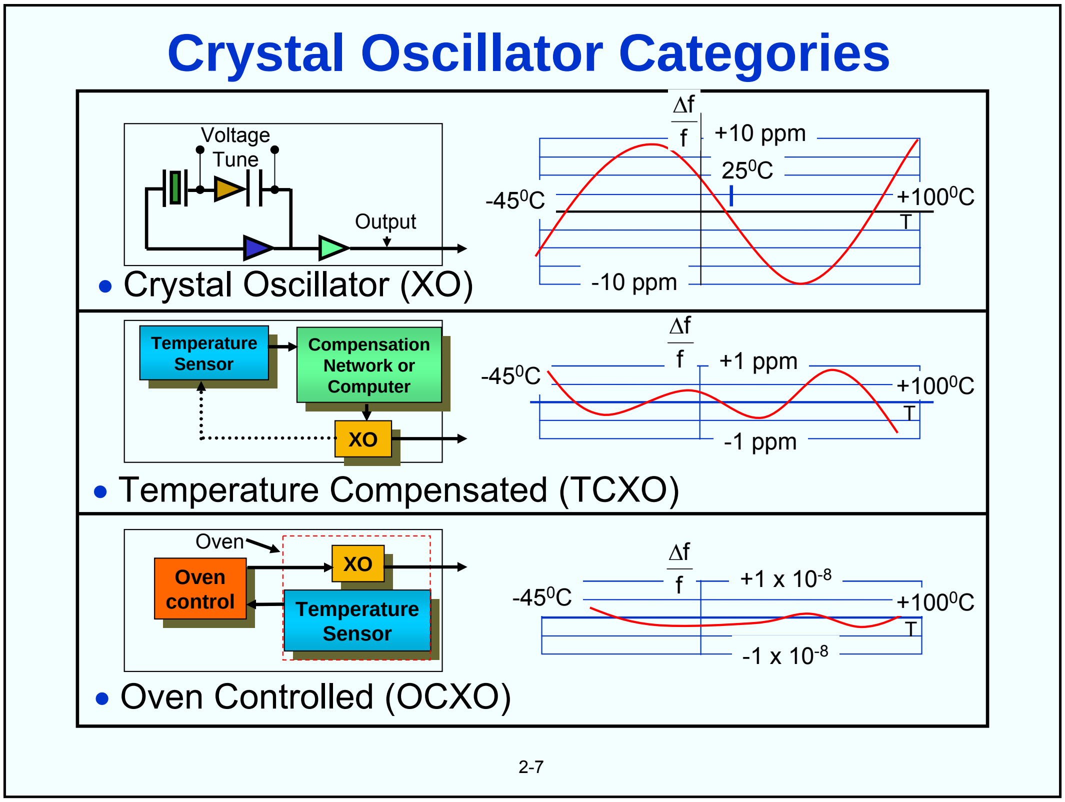

A wide temperature range XO has a typical f vs. T stability of ~10 to 50 ppm. A TCXO can reduce that to ~1 ppm. An OCXO can reduce that stability to 1 x 10^{-8} or better (but at the cost of much higher power consumption). High-end (SC-cut) OCXOs can stay within 1 x 10^{-10} over a wide temperature range.

Hierarchy of Oscillators

Oscillator Type*	Accuracy**	Typical Applications
• Crystal oscillator (XO)	10^{-5} to 10^{-4}	Computer timing
• Temperature compensated crystal oscillator (TCXO)	10^{-6}	Frequency control in tactical radios
• Microcomputer compensated crystal oscillator (MCXO)	10^{-8} to 10^{-7}	Spread spectrum system clock
• Oven controlled crystal oscillator (OCXO)	10^{-8} (with 10^{-10} per g option)	Navigation system clock & frequency standard, MTI radar
• Small atomic frequency standard (Rb, RbXO)	10^{-9}	C^3 satellite terminals, bistatic, & multistatic radar
• High performance atomic standard (Cs)	10^{-12} to 10^{-11}	Strategic C^3, EW

* Sizes range from <5cm^3 for clock oscillators to > 30 liters for Cs standards
Costs range from <$5 for clock oscillators to > $50,000 for Cs standards.

** Including environmental effects (e.g., -40ºC to +75ºC) and one year of aging.

2-8

See also chapter 7 for more detailed comparisons of various oscillators.

Oscillator Circuit Types

Of the numerous oscillator circuit types, three of the more common ones, the Pierce, the Colpitts and the Clapp, consist of the same circuit except that the rf ground points are at different locations. The Butler and modified Butler are also similar to each other; in each, the emitter current is the crystal current. The gate oscillator is a Pierce-type that uses a logic gate plus a resistor in place of the transistor in the Pierce oscillator. (Some gate oscillators use more than one gate).

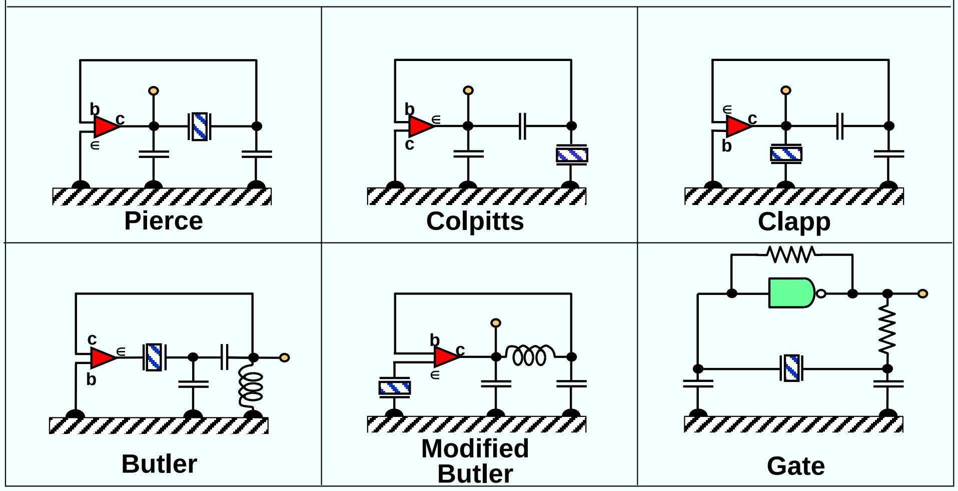

The choice of oscillator circuit type depends on factors such as the desired frequency stability, input voltage and power, output power and waveform, tunability, design complexity, cost and the crystal unit's characteristics.

In the Pierce family, the ground point location has a profound effect on the performance. The Pierce configuration is generally superior to the others, e.g., with respect to the effects of stray reactances and biasing resistors, which appear mostly across the capacitors in the circuit rather than the crystal unit. It is one of the most widely used circuits for high stability oscillators. In the Colpitts configuration, a larger part of the strays appears across the crystal, and the biasing resistors are also across the crystal, which can degrade performance. The Clapp is seldom used because, since the collector is tied directly to the crystal, it is difficult to apply a dc voltage to the collector without introducing losses or spurious oscillations. (See the references for more details.)

The Pierce family usually operates at "parallel resonance" (see "Resonator Frequency vs. Reactance" in Chapt. 3), although it can be designed to operate at series resonance by connecting an inductor in series with the crystal. The Butler family usually operates at (or near) series resonance. The Pierce can be designed to operate with the crystal current above or below the emitter current.

Gate oscillators are common in digital systems when high stability is not a major consideration.

A. Benjaminson, "Computer-Aided Design of Crystal Oscillators," U. S. Army R & D Technical Report DELET-TR-84- 0386-F, August 1985, AD-B096820; "Advanced Crystal Oscillator Design," U. S. Army R & D Technical Report SLCET-TR-85-0445-F, January 1988, AD-B121288; "Advanced Crystal Oscillator Design," U. S. Army R & D Technical Report SLCET-TR-88-0804-1, February 1989, AD-B134514; "Advanced Crystal Oscillator Design," U. S. Army R & D Technical Report SLCET-TR-88-0804-F, December 1991, AD-B163808.

J. P. Buchanan, Handbook of Piezoelectric Crystals for Radio Equipment Designers, WADC Technical Report 56-156, October 1956 (692 pages), available from NTIS, AD 110448.

OCXO Block Diagram

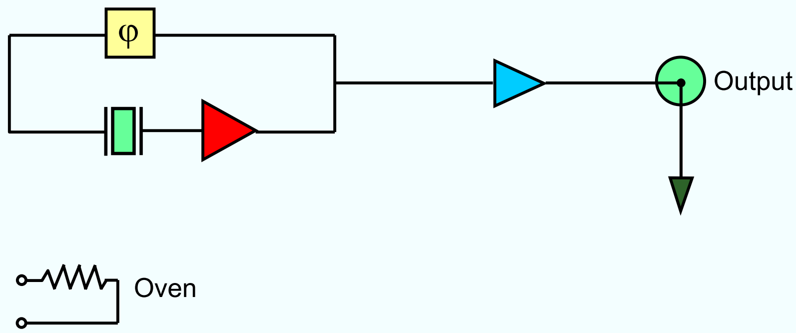

Each of the three main parts of an OCXO, i.e., the crystal, the sustaining circuit, and the oven, contribute to instabilities. The various instabilities are discussed in the rest of chapter 3 and in chapter 4.

2-10

F. L. Walls & J. R. Vig, "Fundamental Limits on the Frequency Stabilities of Quartz Crystal Oscillators," IEEE Transactions on Ultrasonics, Ferroelectrics, and Frequency Control, vol. 42, pp. 576-589, July 1995.

F. L. Walls & J.-J. Gagnepain, "Environmental Sensitivities of Quartz Oscillators, IEEE Trans. Ultrasonics, Ferroelectrics and Frequency Control, vol. 39, pp. 241-249, 1992.

Oscillator Instabilities - General Expression

$$\frac{\Delta f}{f_{oscillator}} \approx \frac{\Delta f}{f_{resonator}} + \frac{1}{2Q_L}\left[1+\left(\frac{2f_f Q_L}{f}\right)^2\right]^{-1/2} d\varphi(f_f)$$

where Q_L = loaded Q of the resonator, and $d\phi(f_f)$ is a small change in loop phase at offset frequency f_f away from carrier frequency f. Systematic phase changes and phase noise within the loop can originate in either the resonator or the sustaining circuits. Maximizing Q_L helps to reduce the effects of noise and environmentally induced changes in the sustaining electronics. In a properly designed oscillator, the short-term instabilities are determined by the resonator at offset frequencies smaller than the resonator's half-bandwidth, and by the sustaining circuit and the amount of power delivered from the loop for larger offsets.

F. L. Walls & J. R. Vig, "Fundamental Limits on the Frequency Stabilities of Quartz Crystal Oscillators," IEEE Transactions on Ultrasonics, Ferroelectrics, and Frequency Control, vol. 42, pp. 576-589, July 1995.

Instabilities due to Sustaining Circuit

• **Load reactance change** - adding a load capacitance to a crystal changes the frequency by

$$\delta f \equiv \frac{\Delta f}{f} \cong \frac{C_1}{2(C_0 + C_L)}$$

$$\text{then,}\ \frac{\Delta(\delta f)}{\Delta C_L} \cong -\frac{C_1}{2(C_0 + C_L)^2}$$

• **Example**: If C_0 = 5 pF, C_1 = 14fF and C_L = 20pF, then a ΔC_L = 10 fF (= 5 X 10^{-4}) causes ≈1 X 10^{-7} frequency change, and a C_L aging of 10 ppm per day causes 2 X 10^{-9} per day of oscillator aging.

• **Drive level changes:** Typically 10^{-8} per ma^2 for a 10 MHz 3rd SC-cut.

• **DC bias** on the crystal also contributes to oscillator aging.

2-12

See "Frequency vs. Drive Level" in Chapter 4.

A DC voltage on the resonator can be a significant contributor to aging. To minimize this aging mechanism, the sustaining circuit must be designed so as to **not** apply a DC voltage to the resonator. This may be accomplished by, e.g., by placing a capacitor in series and a few MΩ resistor in parallel with the resonator.

R.L. Filler, J A. Kosinski, V.J. Rosati and J.R. Vig, "Aging Studies On Quartz Crystal Resonators And Oscillators," Proc. 38th Ann. Symp. On Frequency Control, pp. 225-231, 1984.

Oscillator Instabilities - Tuned Circuits

Many oscillators contain tuned circuits - to suppress unwanted modes, as matching circuits, and as filters. The effects of small changes in the tuned circuit's inductance and capacitance is given by:

$$\frac{\Delta f}{f}_{\text{oscillator}} \approx \frac{d\varphi(f_f)}{2Q_L} \approx \left(\frac{1}{1+\frac{2f_f}{BW}}\right)\left(\frac{Q_c}{Q}\right)\left(\frac{dC_c}{C_c}+\frac{dL_c}{L_c}\right)$$

where BW is the bandwidth of the filter, f_f is the frequency offset of the center frequency of the filter from the carrier frequency, Q_L is the loaded Q of the resonator, and Q_c, L_c and C_c are the tuned circuit's Q, inductance and capacitance, respectively.

F. L. Walls & J. R. Vig, "Fundamental Limits on the Frequency Stabilities of Quartz Crystal Oscillators," IEEE Transactions on Ultrasonics, Ferroelectrics, and Frequency Control, vol. 42, pp. 576-589, July 1995.

Oscillator Instabilities - Circuit Noise

Flicker PM noise in the sustaining circuit causes flicker FM contribution to the oscillator output frequency given by:

$$\mathcal{L}_{osc}(f_f) = \mathcal{L}_{ckt}(1\text{Hz})\frac{f^2}{4f_f^3 Q_L^2}$$

and

$$\sigma_y(\tau) = \frac{1}{Q_L}\sqrt{\ln 2\, \mathcal{L}_{ckt}(1\text{Hz})}$$

where f_f is the frequency offset from the carrier frequency f, Q_L is the loaded Q of the resonator in the circuit, $\mathcal{L}_{ckt}$ (1Hz) is the flicker PM noise at f_f = 1Hz, and τ is any measurement time in the flicker floor range. For $Q_L = 10^6$ and $\mathcal{L}_{ckt}$ (1Hz) = -140dBc/Hz, $\sigma_y(\tau) = 8.3 \times 10^{-14}$. ($\mathcal{L}_{ckt}$ (1Hz) = -155dBc/Hz has been achieved.)

F. L. Walls & J. R. Vig, "Fundamental Limits on the Frequency Stabilities of Quartz Crystal Oscillators," IEEE Transactions on Ultrasonics, Ferroelectrics, and Frequency Control, vol. 42, pp. 576-589, July 1995.

E. S. Ferre-Pikal, F. L. Walls & C. W. Nelson, “Design Criteria for BJT Amplifiers with Low 1/f AM and PM Noise,” Proc. 1995 IEEE Int'l Frequency Control Symposium, pp. 305-313, 1995.

Oscillator Instabilities - External Load

If the external load changes, there is a change in the amplitude or phase of the signal reflected back into the oscillator. The portion of that signal which reaches the oscillating loop changes the oscillation phase, and hence the frequency by

$$\frac{\Delta f}{f}_{\text{oscillator}} \approx \frac{d\phi(f_f)}{2Q} \approx \left(\frac{1}{2Q}\right)\left(\frac{\Gamma - 1}{\Gamma + 1}\right)(\sin\theta)\sqrt{\text{isolation}}$$

where Γ is the VSWR of the load, and θ is the phase angle of the reflected wave; e.g., if Q ~ 10^6, and isolation ~40 dB (i.e., ~10^{-4}), then the worst case (100% reflection) pulling is ~5×10^{-9}. A VSWR of 2 reduces the maximum pulling by only a factor of 3. The problem of load pulling becomes worse at higher frequencies, because both the Q and the isolation are lower.

2-15

F. L. Walls & J. R. Vig, "Fundamental Limits on the Frequency Stabilities of Quartz Crystal Oscillators," IEEE Transactions on Ultrasonics, Ferroelectrics, and Frequency Control, vol. 42, pp. 576-589, July 1995.

Oscillator Outputs

Most users require a sine wave, a TTL-compatible, a CMOS-compatible, or an ECL-compatible output. The latter three can be simply generated from a sine wave. The four output types are illustrated below, with the dashed lines representing the supply voltage inputs, and the bold solid lines, the outputs. (There is no "standard" input voltage for sine wave oscillators. The input voltages for CMOS typically range from 1V to 10V.)

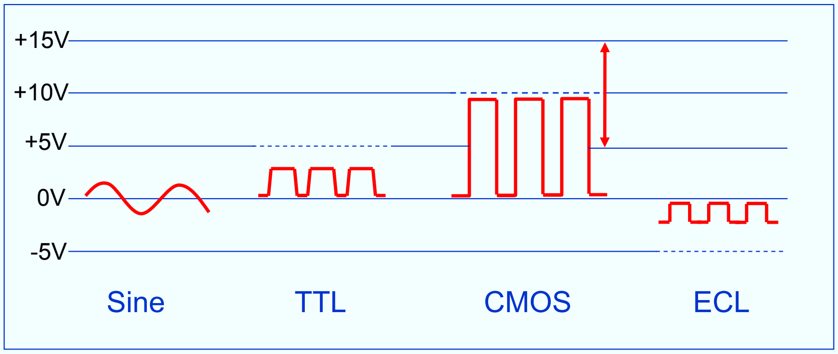

-

"QUARTZ CRYSTAL RESONATORS AND OSCILLATORS
For Frequency Control and Timing Applications - A TUTORIAL"
Rev. 8.5.1.2, by John R. Vig, July 2001, AD-M001251.

Resonator Self-Temperature Sensing

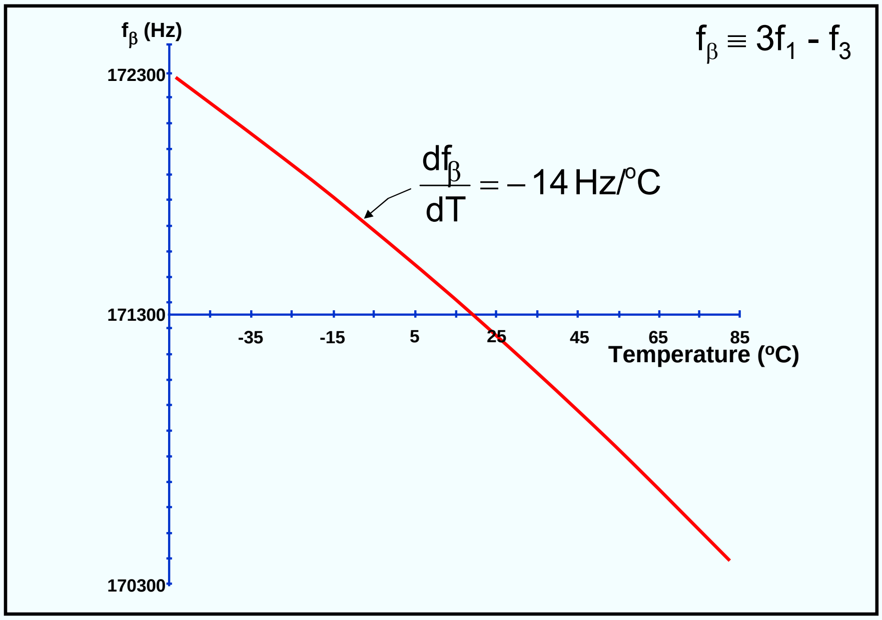

2-17

As is shown in chapter 4, see “Effects of Harmonics on f vs. T,” the f vs. T of the fundamental mode of a resonator is different from that of the third and higher overtones. This fact is exploited for “self-temperature sensing” in the microcomputer compensated crystal oscillator (MCXO). The fundamental (f_1) and third overtone (f_3) frequencies are excited simultaneously (“dual mode” excitation) and a beat frequency f_β is generated such that $f_\beta = 3f_1 - f_3$ (or $f_\beta = f_1 - f_3/3$). The f_β is a monotonic and nearly linear function of temperature, as is shown above for a 10 MHz 3rd overtone (3.3. MHz fundamental mode) SC-cut resonator. This resonator was 14 mm in diameter, plano-convex, and had a 3 diopter contour.

The f_β is a measure of the resonator’s temperature exactly where the resonator is vibrating, thereby eliminating the need for a thermometer other than the resonator. Because the SC-cut is thermal transient compensated, the thermal transient effects are also eliminated, as are the effects of temperature gradients between the thermometer and the resonator.

For temperature compensation purposes, the f_β vs. T need not be used; the calibration can consist of f vs. f_β only. The role of a thermometer during calibration is then only to insure that the specified temperature range is covered.

See also “Mode Spectrograph of an SC-cut” and the page that follows it in Chapter 3.

S. Schodowski, "Resonator Self-Temperature-Sensing Using a Dual-Harmonic-Mode Crystal Oscillator," Proc. 43rd Annual Symposium on Frequency Control, pp. 2-7, 1989, IEEE Catalog No. 89CH2690-6.

R. Filler and J. Vig, "Resonators for the Microcomputer-Compensated Crystal Oscillator," Proc. 43rd Annual Symposium on Frequency Control, pp. 8-15, 1989, IEEE Catalog No. 89CH2690-6.

Thermometric Beat Frequency Generation

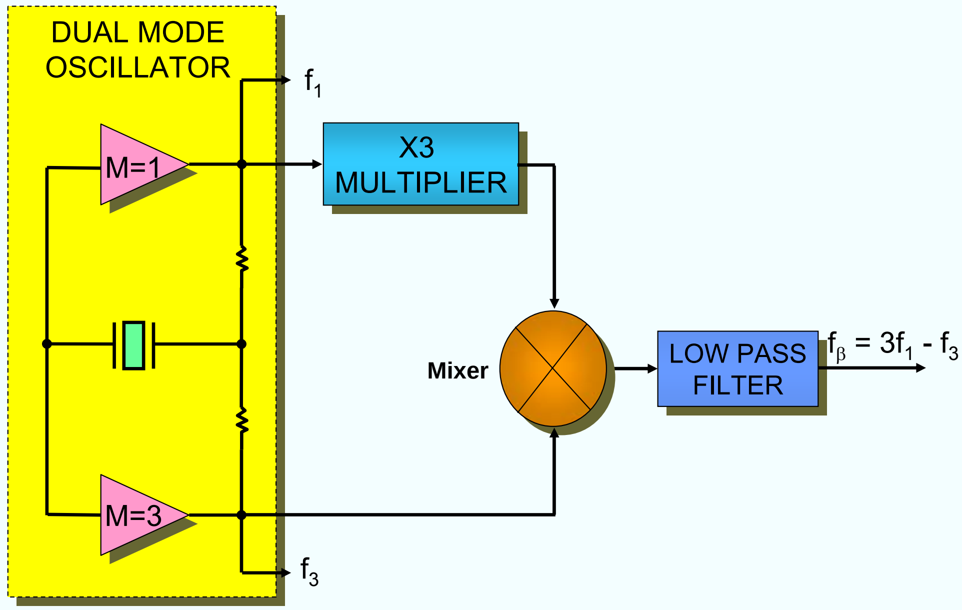

2-18

The microcomputer compensated crystal oscillator (MCXO) uses a high-stability 10 MHz SC-cut quartz resonator and a dual mode oscillator which simultaneously excites the fundamental and third overtone modes of the resonator. The beat frequency may be generated either by multiplying the fundamental mode frequency by three and subtracting from it the third overtone frequency, as shown above, or by dividing the third overtone frequency by three, in which case the beat frequency is $f_\beta = f_1 - f_3/3$. The beat frequency is a monotonic and nearly linear function of temperature, as is shown on the previous page. It provides a high precision, digital measure of the vibrating region's temperature, thereby eliminating the need for an external thermometer.

S. Schodowski, "Resonator Self-Temperature-Sensing Using a Dual-Harmonic-Mode Crystal Oscillator," Proc. 43rd Annual Symposium on Frequency Control, pp. 2-7, 1989, IEEE Catalog No. 89CH2690-6.

Microcomputer Compensated Crystal Oscillator (MCXO)

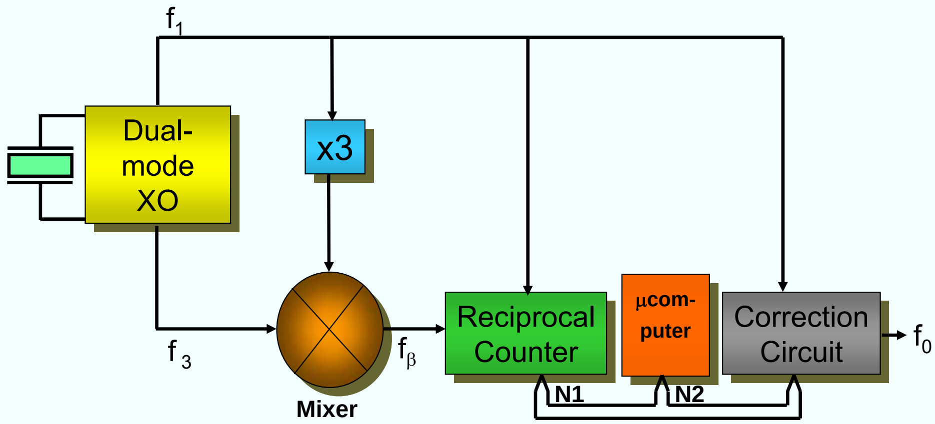

2-19

The f_β is used to gate a reciprocal counter that uses the fundamental mode frequency as the time base. The counter's output is a number N_1 which varies with temperature. The microcomputer, in which f_1 vs. f_β calibration information specific to each resonator is stored, solves an equation and outputs a number N_2 which is used to correct for the variations of f_1 with temperature.

Two correction methods have been used. In one, the SC-cut resonator is made to have a frequency that is slightly above the output frequency f_o at all temperatures, and pulse deletion is used to obtain an f_o that is stable over the temperature range. In the other method, the SC-cut resonator's frequency is slightly below the output frequency f_o at all temperatures, and and a correction frequency (generated by means of a direct digital synthesizer) is added to obtain an f_o that is stable over the temperature range. The two methods are explained in more detail on the following pages.

S. Schodowski, "Resonator Self-Temperature-Sensing Using a Dual-Harmonic-Mode Crystal Oscillator," Proc. 43rd Annual Symposium on Frequency Control, pp. 2-7, 1989, IEEE Catalog No. 89CH2690-6.

R. Filler and J. Vig, "Resonators for the Microcomputer-Compensated Crystal Oscillator," Proc. 43rd Annual Symposium on Frequency Control, pp. 8-15, 1989, IEEE Catalog No. 89CH2690-6.

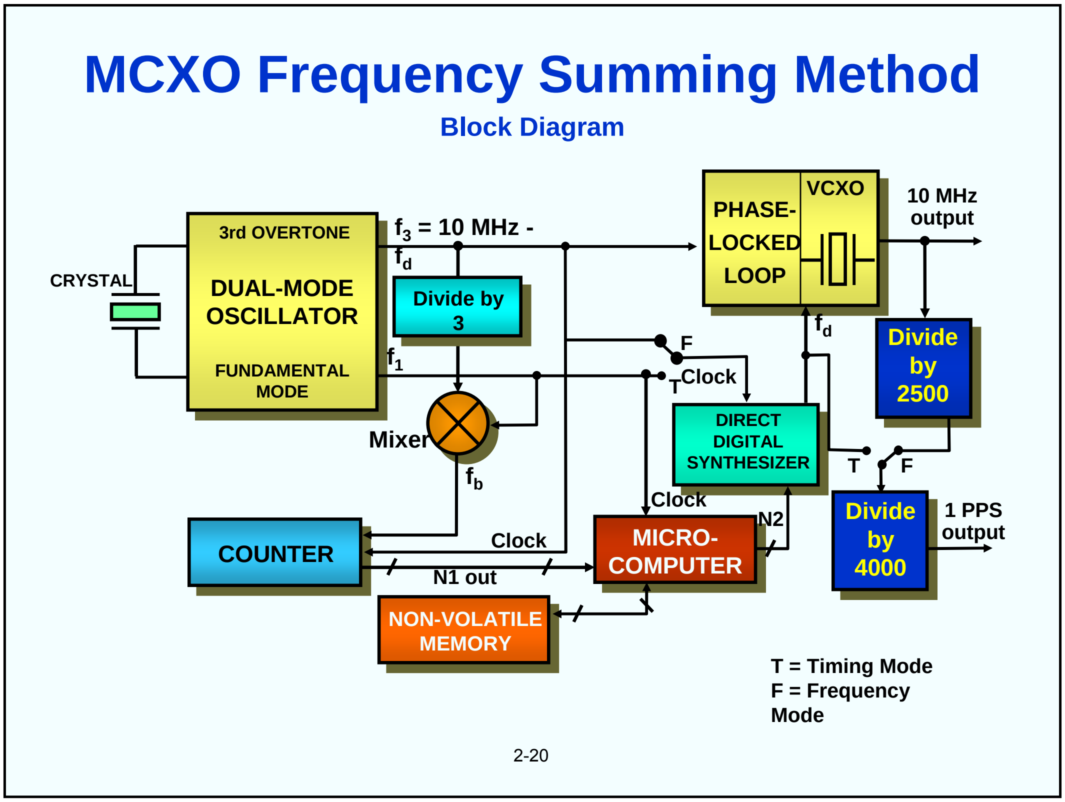

In the frequency summing method, the direct digital synthesizer (DDS) generates a correction frequency f_d, based on N_2, such that $f_3 + f_d$ = 10 MHz at all temperatures. The phase locked loop locks the VCXO to this precise 10 MHz.

In the “frequency mode,” the 1 PPS output is derived by division from 10 MHz. In the power conserving “timing mode,” the 1 PPS is generated directly from f_3 driving the DDS, and by using a different calibration equation. The PLL and portions of the digital circuitry are turned off, the microprocessor goes to “sleep” between corrections, and the time between corrections is increased to reduce the power requirement.

A. Benjaminson and S. Stallings, "A Microcomputer-Compensated Crystal Oscillator Using Dual-Mode Resonator," Proc. 43rd Annual Symposium on Frequency Control, pp. 20-26, 1989, IEEE Catalog No. 89CH2690-6.

A. Benjaminson and B. Rose, "Performance Tests on an MCXO Combining ASIC and Hybrid Construction," Proc. 45th Annual Symposium on Frequency Control, pp. 393-397, IEEE pub. no. 91CH2965-2, 1991.

E. Jackson, H. Phillips, B. E. Rose, "The Micro-computer Compensated Crystal Oscillator - A Progress Report," Proc. 1996 IEEE Int'l Frequency Control Symposium, pp. 687-692, IEEE pub. no. 96CH35935, 1996.

MCXO - Pulse Deletion Method

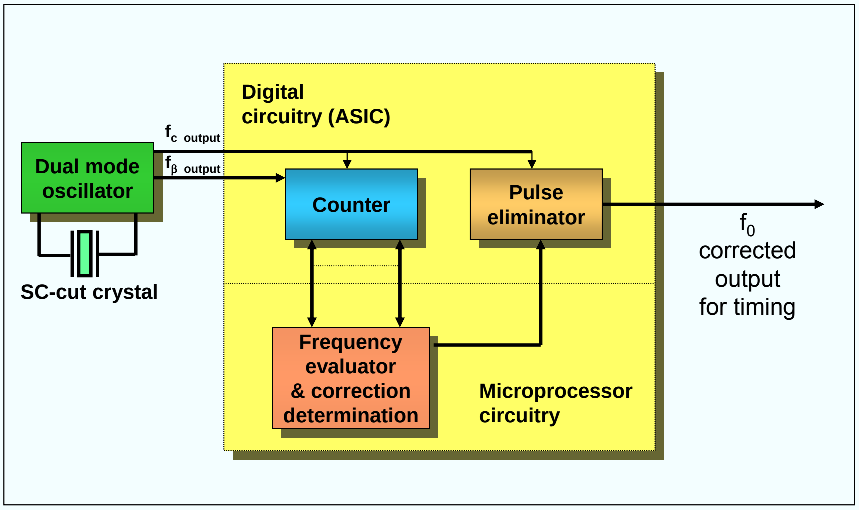

Microcomputer compensated crystal oscillator (MCXO) block diagram - pulse deletion method.

2-21

In the pulse deletion method, the SC-cut resonator's frequency is slightly above the output frequency, f_o. For example, if f_o is 10 MHz, then the SC-cut resonator is made to have a frequency slightly above 10 MHz at all temperatures over the design temperature range. The dual-mode oscillator provides output signals at two frequencies, one of which, f_β, is the resonator temperature indicator. The signals are processed by the microcomputer which, from f_β, determines the necessary correction to f_c and then subtracts the required number of pulses from f_c to obtain the corrected output f_o. Fractions of pulses that cannot be subtracted within the update interval (~ 1 s) are used as a carry, so that the long-term average is within the $\pm 2 \times 10^{-8}$ design accuracy. Correction data in the PROM are unique to each crystal and are obtained from a precise f_c vs. f_β calibration over the temperature range. The corrected output signal f_o can be divided down to produce a 1 pps time reference, or can be used directly to drive a clock. Due to the objectionable noise characteristics created by the pulse deletion process, additional signal processing is necessary to provide a useful RF output for frequency control applications. This can be accomplished by, for example, imparting the MCXO's frequency accuracy to a low-noise, low-cost voltage controlled crystal oscillator (VCXO) via locking the VCXO frequency to f_o.

M. Bloch, M. Meirs and J. Ho, "The Microcomputer Compensated Crystal Oscillator (MCXO)," Proc. 43rd Annual Symposium on Frequency Control, pp. 16-19, 1989, IEEE Catalog No. 89CH2690-6.

MCXO - TCXO Resonator Comparison

Parameter	MCXO	TCXO
Cut, overtone	SC-cut, 3rd	AT-cut, fund.
Angle-of-cut tolerance	Loose	Tight
Blank f and plating tolerance	Loose	Tight
Activity dip incidence	Low	Significant
Hysteresis (-55^{0}C to +85^{0}C)	10^{-9} to 10^{-8}	10^{-7} to 10^{-6}
Aging per year	10^{-8} to 10^{-7}	10^{-7} to 10^{-6}

The table shows a comparison between resonators for the MCXO and for precision analog TCXO. Not only is the angle-of-cut tolerance looser for MCXO resonators, but so are the blank frequency and plating tolerances. In both MCXO implementations, pulse deletion and frequency-summing, the resonator target frequency during plating is chosen to ensure that the resonator frequency is either above or below the nominal clock frequency at all temperatures. Therefore, there is no need to specify a tight plating tolerance. In fact, no frequency adjustment should be necessary if the rough plating is reasonably well controlled.

The hysteresis and aging are lower for MCXO resonators than for TCXO resonators because third-overtone SC-cut resonators are inherently more stable than the fundamental-mode AT-cut resonators normally used in wide-temperature-range TCXO. Another possible factor may be that the interface between the rough plating and the fine plating can be eliminated in MCXO resonators.

Hysteresis is the major limitation on the f vs. T stability that is achievable with the MCXO. Although the majority of resonators so far have exhibited hysteresis at the low 10^{-8} level, some have been in the 10^{-9} range. This shows that MCXO's with an f vs. T stability in the 10^{-9} range is a reasonable goal for the future, but, for that goal to be met, further research is needed to gain a better understanding of the mechanisms responsible for hysteresis.

R. Filler and J. Vig, "Resonators for the Microcomputer-Compensated Crystal Oscillator," Proc. 43rd Annual Symposium on Frequency Control, pp. 8-15, 1989, IEEE Catalog No. 89CH2690-6.

Y. Kim, B. Rose, T. Schuyler & J.R. Vig, “Hysteresis Measurements of 20 MHz Third Overtone SC-cut MCXO Resonators,” Proc. 1998 IEEE Int’l Frequency Control Symp., pp. 126-129, 1998.

Opto-Electronic Oscillator (OEO)

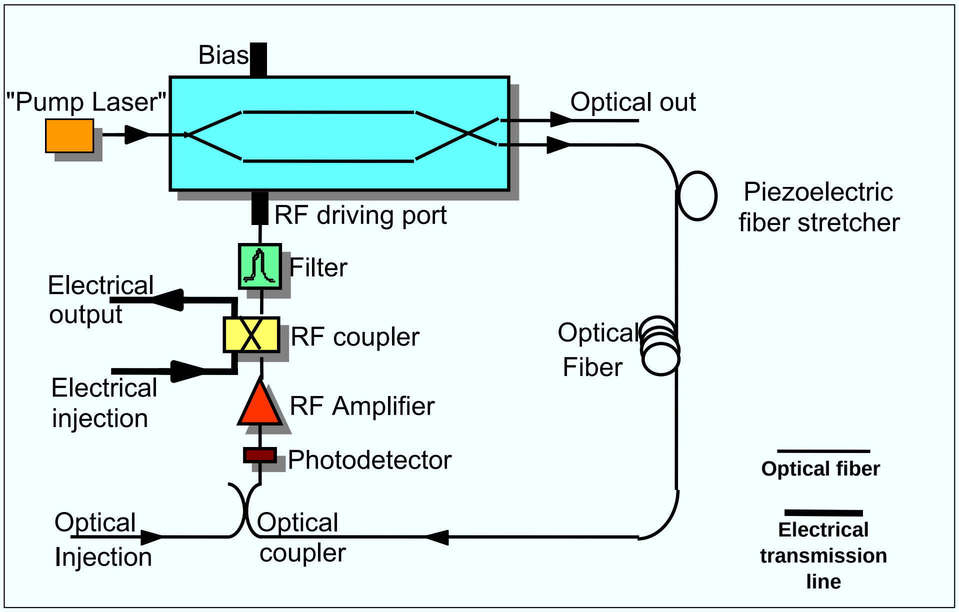

2-23

The OEO utilizes the transmission characteristics of a modulator together with a fiber optic delay line to convert light energy into spectrally pure rf/microwave reference signals. The OEO's schematic diagram is shown above. Light from a laser is introduced into an electrooptical (E/O) modulator, the output of which is passed through a long fiber optic link, and detected with a photodetector. The output of the photodetector is amplified, filtered and fed back to the electrical port of the modulator. This configuration supports self-sustained oscillations at a frequency determined by the fiber delay length, bias setting of the modulator, and the bandpass characteristics of the filter. It also provides for both electrical and optical outputs.

The noise of an OEO has been measured to be -140 dBc/Hz at 10 kHz from a 10 GHz carrier. This is the highest spectral purity demonstrated by an open loop oscillator in this frequency range (as of 1999). How stable an OEO can be with respect to other parameters, such as temperature, acceleration and humidity, is being investigated.

S. Yao and L. Maleki, "New Results with the Opto-electronic Oscillators (OEO)," Proc. 1996 IEEE Int'l Frequency Control Symposium, pp. 1219-1222, 1996.

X. S. Yao and L. Maleki, "Optoelectronic Oscillator for Photonic Systems," IEEE Journal of Quantum Electronics, **32**, 1141, 1996.

X. S. Yao, L. Maleki and L. Davis, "Coupled Opto-electronic Oscillators," Proc. 1998 IEEE Int'l Frequency Control Symposium, pp. 540-544, 1998.

CHAPTER 3
Quartz Crystal Resonators

3

General References

A. Ballato, "Piezoelectric Resonators," in B. Parzen, Design of Crystal and Other Harmonic Oscillators, pp. 66-122, John Wiley and Sons, Inc., 1983.

V. E. Bottom, Introduction to Quartz Crystal Unit Design, Van Nostrand Reinhold Company, 1982.

R. A. Heising, Quartz Crystals for Electrical Circuits, D. Van Nostrand Co., 1946.

T. R. Meeker, "Theory and Properties of Piezoelectric Resonators and Waves," in E. A. Gerber and A. Ballato, Precision Frequency Control, Vol. 1, pp. 48-118, Academic Press, 1985.

J. A. Kusters, "Resonator and Device Technology," in E. A. Gerber and A. Ballato, Precision Frequency Control, Vol. 1, pp. 161-183, Academic Press, 1985.

E. Hafner, "Resonator and Device Measurements," in E. A. Gerber and A. Ballato, Precision Frequency Control, Vol. 2, pp.1-44, Academic Press, 1985.

J. C. Brice, "Crystals for Quartz Resonators," Rev. of Modern Physics, Vol. 57, pp. 105-146, 1985.

J. R. Vig & F. L. Walls, "Fundamental Limits on the Frequency Instabilities of Quartz Crystal Oscillators," Proc. 1994 IEEE Int'l Frequency Control Symposium, pp. 506-523, 1994; also, in IEEE Trans. on Ultrasonics, Ferroelectrics, and Frequency Control, vol. 42, pp. 576-589, July 1995.

J. R. Vig, "Introduction to Quartz Frequency Standards," Army Research Lab. Tech. Rep't SLCET-TR-92-1 (Rev. 1), October 1992, AD-A256373; also in the Tutorials from the Twenty-third Annual Precise Time and Time Interval (PTTI) Applications and Planning Meeting, Pasadena, CA, pp. 1-49, December 1991, AD-A254745, and at <http://www.ieee.org/uffc/fc>.

Why Quartz?

Quartz is the only material known that possesses the following combination of properties:

- Piezoelectric ("pressure-electric"; piezein = to press, in Greek)
- Zero temperature coefficient cuts exist
- Stress compensated cut exists
- Low loss (i.e., high Q)
- Easy to process; low solubility in everything, under "normal" conditions, except the fluoride and hot alkali etchants; hard but not brittle
- Abundant in nature; easy to grow in large quantities, at low cost, and with relatively high purity and perfection. Of the man-grown single crystals, quartz, at ~3,000 tons per year, is second only to silicon in quantity grown (3 to 4 times as much Si is grown annually, as of 1997).

-

The Piezoelectric Effect

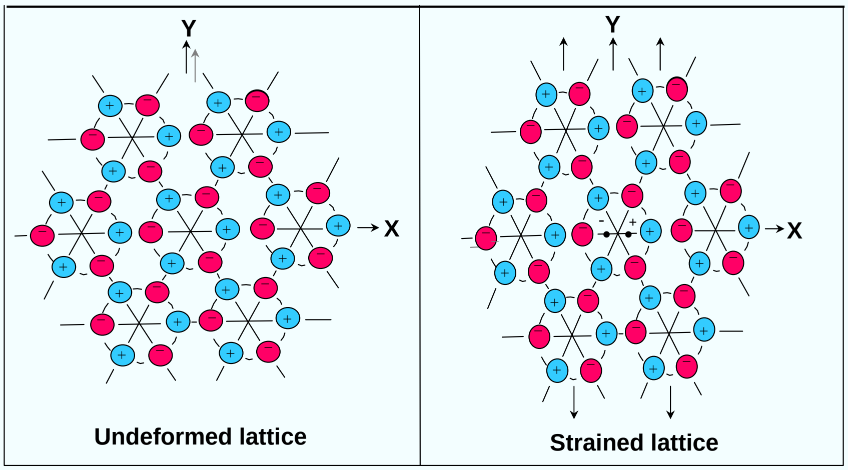

The piezoelectric effect provides a coupling between the mechanical properties of a piezoelectric crystal and an electrical circuit.

3-2

The direct piezoelectric effect was discovered by the Curie brothers in 1880. They showed that when a weight was placed on a quartz crystal, charges appeared on the crystal surface; the magnitude of the charge was proportional to the weight. In 1881, the converse piezoelectric effect was illustrated; when a voltage was applied to the crystal, the crystal deformed due to the lattice strains caused by the effect. The strain reversed when the voltage was reversed. The piezoelectric effect can, thereby, provide a coupling between an electrical circuit and the mechanical properties of the crystal. Under the proper conditions, a “good” piezoelectric resonator can stabilize the frequency of an oscillator circuit.

Of the 32 crystal classes, 20 exhibit the piezoelectric effect (but only a few of these are useful). Piezoelectric crystals lack a center of symmetry. When a force deforms the lattice, the centers of gravity of the positive and negative charges in the crystal can be separated so as to produce surface charges. The figure shows one example (from Kelvin’s qualitative model) of the effect in quartz. Each silicon atom is represented by a plus, and each oxygen atom by a minus. When a strain is applied so as to elongate the crystal along the Y-axis, there are net movements of negative charges to the left and positive charges to the right (along the X-axis).

When a crystal has a center of symmetry, i.e., when the properties of the crystal are the same in both directions along any line in the crystal, no piezoelectric effect can occur. Electrostriction, however, exists in all dielectric solids. It is a deformation quadratic in the applied electric field (whereas, piezoelectricity is a linear effect; reversal of the electric field reverses the mechanical deformation.) Biased electrostriction, where small electric field variations are superimposed on a constant component, is phenomenologically equivalent to linear piezoelectricity; this artifice may be used with nonpiezoelectric crystals such as silicon, but the coupling depends upon the bias, and is often small.

R. A. Heising, Quartz Crystals for Electrical Cicuits - Their Design and Manufacture, D. Van Nostrand Co., New York, pp. 16-20, 1946.

The Piezoelectric Effect in Quartz

STRAIN		FIELD along: X	Y	Z
EXTENSIONAL along:	X	√		
	Y	√		
	Z			
SHEAR about:	X	√		
	Y		√	
	Z		√	

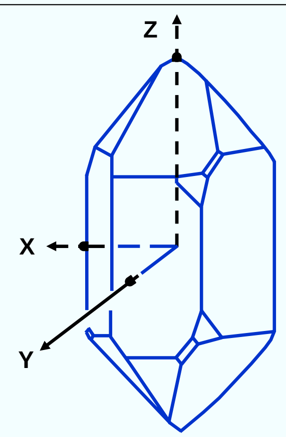

In quartz, the five strain components shown may be generated by an electric field. The modes shown on the next page may be excited by suitably placed and shaped electrodes. The shear strain about the Z-axis produced by the Y-component of the field is used in the rotated Y-cut family, including the AT, BT, and ST-cuts.

3-3

Piezoelectricity is a linear effect. Reversal of the electric field reverses the strain, i.e., the mechanical deformation.

The electromechanical (also called piezoelectric) coupling factor k is an important characteristic of a piezoelectric material; k is between zero and one and is dimensionless, e.g., k = 8.8% for AT-cut quartz, and k = 4.99% for SC-cut quartz. It is a measure of the efficacy of piezoelectric transduction, and it is a determinant of important device characteristics such as filter bandwidth, insertion loss, and the location and spacings of resonators' critical frequencies (e.g., the series resonance to antiresonance frequency spacing).

W. G. Cady, **Piezoelectricity**, Dover Publications, Inc., New York, 1964.

A. Ballato, **Piezoelectricity: Venerable Effects, Modern Thrusts**, Army Research Laboratory Technical Report ARL-TR-70, August 1994. Available from NTIS, and among the "Review Papers" at **www.ieee-uffc.org/fc**

G. S. Kino, **Acoustic Waves: Devices, Imaging, and Analog Signal Processing**, Prentice-Hall, Inc., 1964. This book is available on-line to IEEE UFFC-S members at **www.ieee-uffc.org/archive**

Modes of Motion

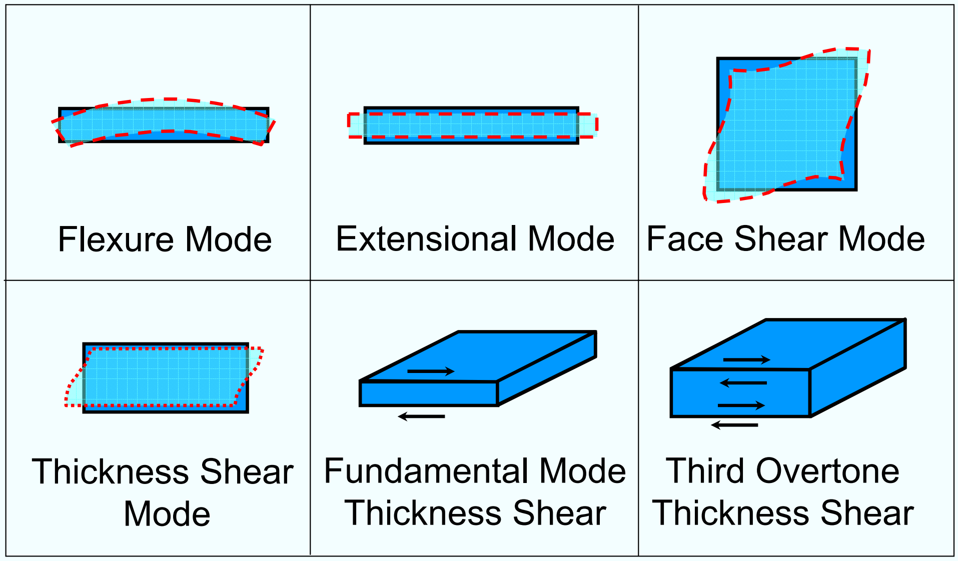

Shown above are the bulk acoustic wave (BAW) modes of motion. For example, AT-cut and SC-cut resonators vibrate in the thickness shear mode. Above 100 MHz, overtone units that operate at a selected harmonic mode of vibration are often used (e.g., third overtone or 5th overtone). Higher than 100 MHz fundamental mode units can be manufactured by, e.g., chemical polishing (diffusion controlled wet etching), plasma etching, and ion milling techniques. Below 1 MHz, tuning forks, X-Y and NT bars (flexure mode), +5° X-cuts (extensional mode), or CT-cut and DT-cut units (face shear mode) can be used. Tuning forks have become the dominant type of low-frequency units due to their small size and low cost (see “Quartz Resonators for Wristwatches” and the following pages later in this chapter).

The velocities of acoustic waves in solids are typically ~3,000 m/s (~10^{-5} times the velocity of light). For the shear waves in AT-cut quartz, for example, the velocity of propagation in the thickness direction is 3,320 m/s; the fundamental mode frequency ~ v/2h, where v is the acoustic wave velocity and h is the plate thickness. (The thickness of the plate is one half the wavelength.)

Motion Of A Thickness Shear Crystal

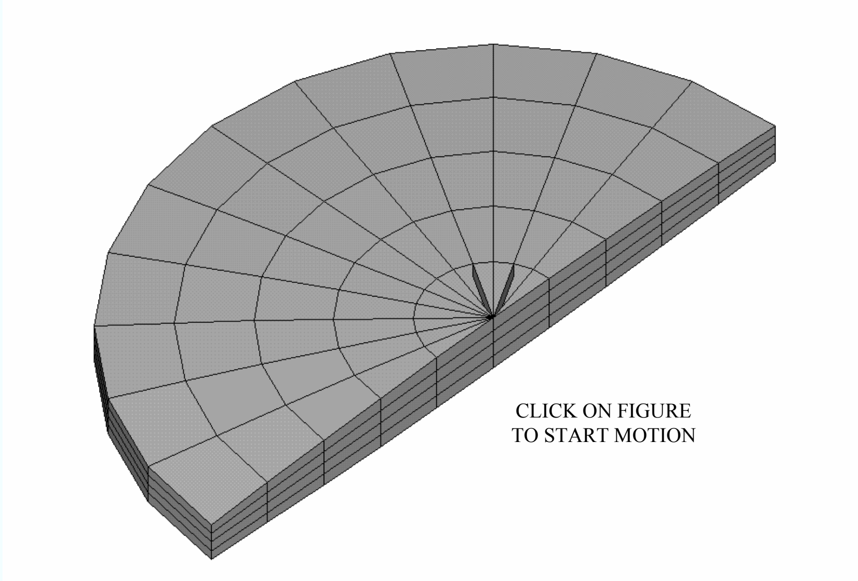

Note that only the area near the center moves. The edges are inactive in a properly designed resonator.

This illustration and animation is "borrowed" from "Quartz Crystals vs. Their Environment: Time Bases or Sensors? (Keeping the World on Time and Your Tanks Full of Gas)," Errol P. EerNisse, 2000 UFFC Society Distinguished Lecture. (Animation requires Funddemo.avi.)

Resonator Vibration Amplitude Distribution

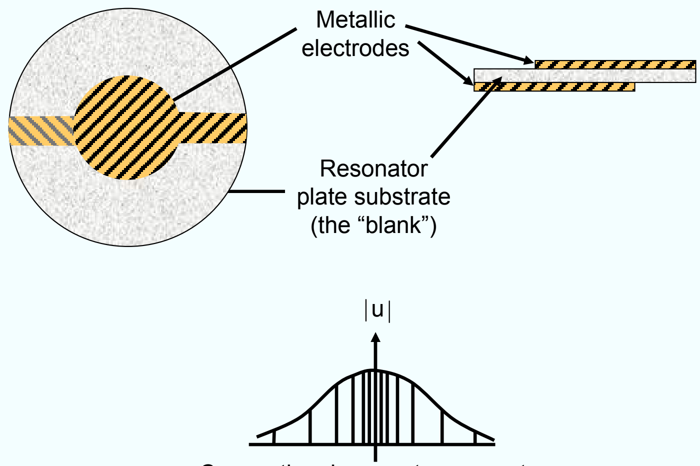

Conventional resonator geometry
and amplitude distribution, |u|

3-5

In an ideal resonator, the amplitude of vibration falls off approximately exponentially outside the electrodes. In a properly designed resonator, a negligible amount of energy is lost to the mounting and bonding structure, i.e., the edges must be inactive in order for the resonator to be able to possess a high Q. The displacement of a point on the resonator surface is proportional to the drive current. At the typical drive currents used in (e.g., 10 MHz) thickness shear resonators, the peak displacement is a few atomic spacings.

The peak acceleration of a point on the surface is often more than a million 'g's. To show this, if the displacement $u = u_o \sin \omega t$, then, the acceleration $= d^2u/dt^2 = - \omega^2 u_o \sin \omega t$, and the peak acceleration $= - \omega^2 u_o$. If we assume that u_o = two lattice spacings ~1×10^{-9} m, then, at 10 MHz, $\omega^2 u_o = (2\pi \times 10^7)^2 (10^{-9}) \sim 10^6$ g.

B. Capelle, J. Detaint, A. Zarka, Y. Zheng and J. Schwartzel, "Mode Shape Analysis Techniques Using Synchrotron X-ray Topography," Proc. 44th Ann. Symp. On Frequency Control, pp. 416-423, 1990.

J. S. Yang and H. F. Tiersten, "An Analysis of Contoured Quartz Resonators with Beveled Cylindrical Edges," Proc. 1995 Int'l Frequency Control Symp., pp. 727-739, 1995.

H. F. Tiersten and D. S. Stevens, "The Evaluationof the Coefficients of Nonlinear Resonance for SC-cut Quartz Resonators," Proc. 39th Annual Symposium on Frequency Control, pp. 325-332, 1985, IEEE Catalog No. 85CH2186-5.

V. E. Bottom, Introduction to Quartz Crystal Unit Design, Van Nostrand Reinhold Company, 1982.

Resonant Vibrations of a Quartz Plate

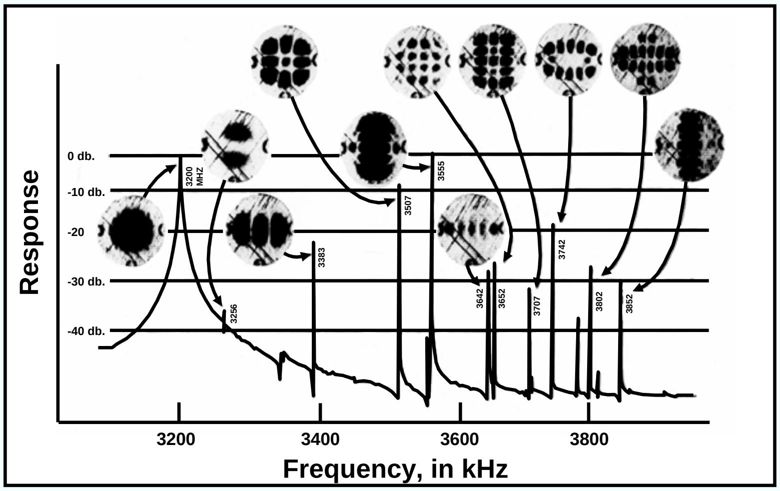

X-ray topographs ($21\bullet\bar{0}$ plane) of various modes excited during a frequency scan of a fundamental mode, circular, AT-cut resonator. The first peak, at 3.2 MHz, is the main mode; all others are unwanted modes. Dark areas correspond to high amplitudes of displacement.

3-6

Resonators of finite dimensions have complicated mode specra. “Unwanted” modes occur above the main resonance, as is shown above. These unwanted (also called “spurious”) modes are especially troublesome in filter applications. In oscillator applications, controlling the unwanted modes is not as critical because, as long as the unwanted modes are at least 10 dB below the main mode, the oscillation will be at the main mode. Contouring, and “energy trapping” rules are used to minimize the unwanted modes. The energy trapping rules consist of certain relationships between the electrode and plate dimensions.

As Shockley, et. al pointed out, “energy trapping” and the concepts of “cutoff frequency” and exponentially decaying waves in piezoelectric resonators are similar to the well-know such phenomena in microwave and optical cavities (related to total internal reflection).

Mindlin has been quoted as having said about spurious modes “they aren’t spurious; they are supposed to be there…the theory predicts them!”

K. Haruta and W. J. Spencer, "X-ray Diffraction Study of Vibrational Modes," Proc. 20th Annual Symposium on Frequency Control, pp. 1-13, April 1966, AD-800523. Copies available from National Technical Information Service.

W. J. Spencer, "Observation of Resonant Vibrations and Defect Structure in Single Crystals by X-ray Diffraction Topography," in Physical Acoustics, Vol. V, W. P. Mason and R. N. Thurston, Eds., Academic Press, New York, 1968.

B. Capelle, J. Detaint, A. Zarka, Y. Zheng and J. Schwartzel, “Mode Shape Analysis Techniques Using Synchrotron X-ray Topography,” Proc. 44th Ann. Symp. On Frequency Control, pp. 416-423, 1990.

W. Shockley, D. R. Curran & D. J. Koneval, “Energy Trapping and Related Studies of Multiple Electrode Filter Crystals,” Proc. 17th Ann. Symp. On Frequency Control, pp. 88-124, 1963.

W. Shockley, D. R. Curran & D. J. Koneval, “Trapped Energy Modes in Quartz Crystal Filters,” J. Acoustical Soc. Amer., vol. 41, pp. 981-993, 1967.

Overtone Response of a Quartz Crystal

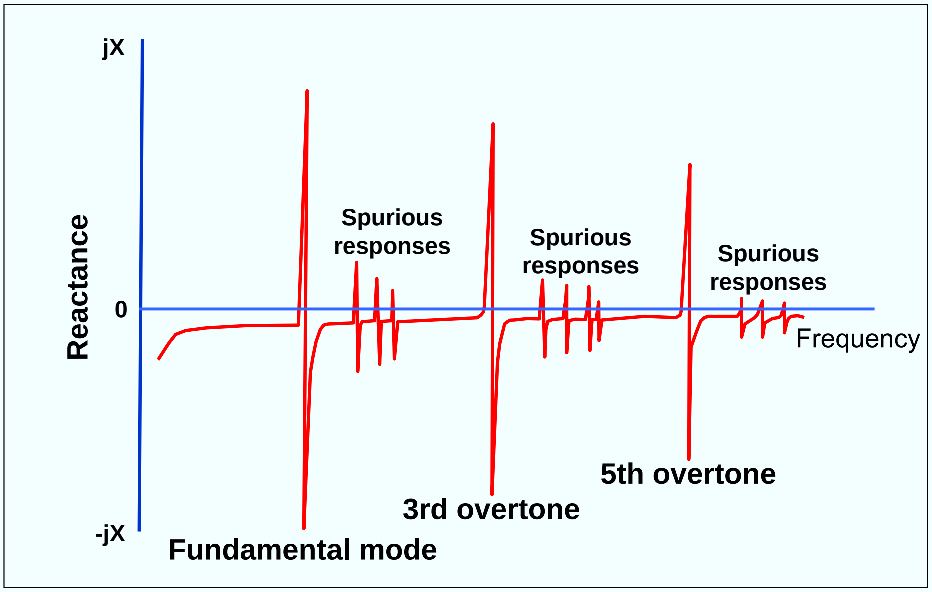

The above figure illustrates the mode spectrum of a quartz resonator, showing the fundamental mode, third overtone, fifth overtone, and some of the spurious responses (“spurs”), i.e., unwanted modes. In oscillator applications, the oscillator usually selects the strongest mode. Some of the unwanted modes have steep frequency vs. temperature characteristics. Occasionally, as the temperature changes, at a certain temperature, the frequency of an unwanted mode coincides with the oscillator frequency, which causes an “activity dip” (see next page, and “Activity Dips” in chapter 4). At the activity dip, excitation of the unwanted mode results in extra energy dissipation in the resonator, which results in a decrease in the Q, an increase in the equivalent series resistance, and a change in the frequency of the oscillator. When the resistance increase is sufficiently large, the oscillation stops, i.e., the oscillator fails. When the temperature changes away from the activity dip temperature, the oscillation restarts.

Unwanted modes can be controlled by proper design and fabrication methods. Maintaining the correct relationships among electrode and resonator plate dimensions (i.e., applying energy trapping rules), and maintaining the parallelism between the major faces of the resonator plate, can minimize the unwanted modes.

W. Shockley, D. R. Curran & D. J. Koneval, “Trapped Energy Modes in Quartz Crystal Filters,” J. Acoustical Soc. Amer., vol. 41, pp. 981-993, 1967.

G.K. Guttwein, T. J. Lukaszek, and A. D. Ballato, “Practical Consequences of Modal Parameter Control in Crystal Resonators,” Proc. 21st Ann. Symp. On frequency Control, pp. 115-137, 1967.

T. R. Meeker, “Theory and Properties of Piezoelectric Resonators and Waves,” in E. A. Gerber and A. Ballato, Precision Frequency Control, Vol. 1, pp. 48-118, Academic Press, 1985.

Unwanted Modes vs. Temperature

(3 MHz rectangular AT-cut resonator, 22 X 27 X 0.552 mm)

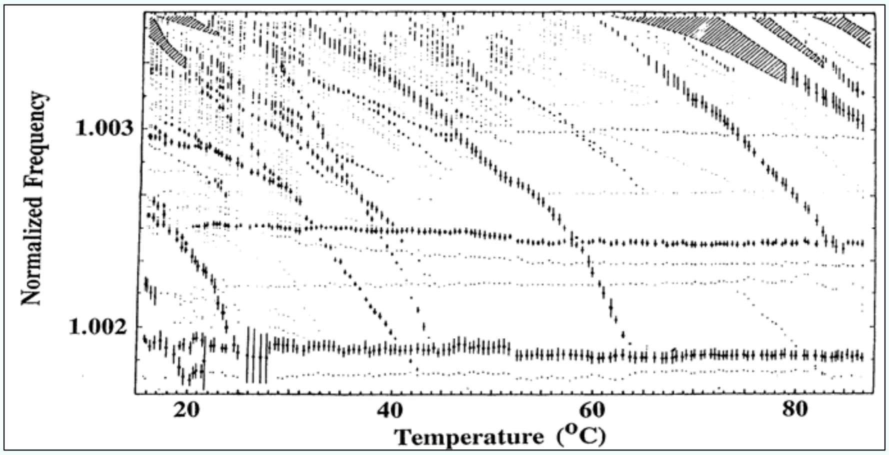

Activity dips occur where the f vs. T curves of unwanted modes intersect the f vs. T curve of the wanted mode. Such activity dips are highly sensitive to drive level and load reactance.

The above "mode chart" shows the frequency vs. temperature characteristics of the unwanted modes of an AT-cut quartz resonator. The temperature coefficients range up to -91 ppm/°C. Proper design can minimize the unwanted modes. For a given design, the unwanted responses are also a function of the drive level.

H. Fukuyo, H. Yoshie, and M. Nakazawa, "The Unwanted Responses of the Crystal Oscillator Controlled by AT-cut Plate," Proc. 21st Annual Symposium on Frequency Control, pp. 402-419, April 1967, AD-659792.

Mathematical Description of a Quartz Resonator

- In piezoelectric materials, electrical current and voltage are coupled to elastic displacement and stress:

$$\{T\} = [c]\{S\} - [\boldsymbol{e}]\{E\}$$
$$\{D\} = [\boldsymbol{e}]\{S\} + [\epsilon]\{E\}$$

where {T} = stress tensor, [c] = elastic stiffness matrix, {S} = strain tensor, [***e***] = piezoelectric matrix
{E} = electric field vector, {D} = electric displacement vector, and [∈] = is the dielectric matrix

- For a linear piezoelectric material

$$\begin{pmatrix} T_1 \\ T_2 \\ T_3 \\ T_4 \\ T_5 \\ T_6 \\ D_1 \\ D_2 \\ D_3 \end{pmatrix} = \begin{pmatrix} c_{11} & c_{12} & c_{13} & c_{14} & c_{15} & c_{16} & -e_{11} & -e_{21} & -e_{31} \\ c_{21} & c_{22} & c_{23} & c_{24} & c_{25} & c_{26} & -e_{12} & -e_{22} & -e_{32} \\ c_{31} & c_{32} & c_{33} & c_{34} & c_{35} & c_{36} & -e_{13} & -e_{23} & -e_{33} \\ c_{41} & c_{42} & c_{43} & c_{44} & c_{45} & c_{46} & -e_{14} & -e_{24} & -e_{34} \\ c_{51} & c_{52} & c_{53} & c_{54} & c_{55} & c_{56} & -e_{15} & -e_{25} & -e_{35} \\ c_{61} & c_{62} & c_{63} & c_{64} & c_{65} & c_{66} & -e_{16} & -e_{26} & -e_{36} \\ e_{11} & e_{12} & e_{13} & e_{14} & e_{15} & e_{16} & \epsilon_{11} & \epsilon_{12} & \epsilon_{13} \\ e_{21} & e_{22} & e_{23} & e_{24} & e_{25} & e_{26} & \epsilon_{21} & \epsilon_{22} & \epsilon_{23} \\ e_{31} & e_{32} & e_{33} & e_{34} & e_{35} & e_{36} & \epsilon_{31} & \epsilon_{32} & \epsilon_{33} \end{pmatrix} \begin{pmatrix} S_1 \\ S_2 \\ S_3 \\ S_4 \\ S_5 \\ S_6 \\ E_1 \\ E_2 \\ E_3 \end{pmatrix}$$

where

$T_1 = T_{11}$ $S_1 = S_{11}$
$T_2 = T_{22}$ $S_2 = S_{22}$
$T_3 = T_{33}$ $S_3 = S_{33}$
$T_4 = T_{23}$ $S_4 = 2S_{23}$
$T_5 = T_{13}$ $S_5 = 2S_{13}$
$T_6 = T_{12}$ $S_6 = 2S_{12}$

- **Elasto-electric matrix for quartz**

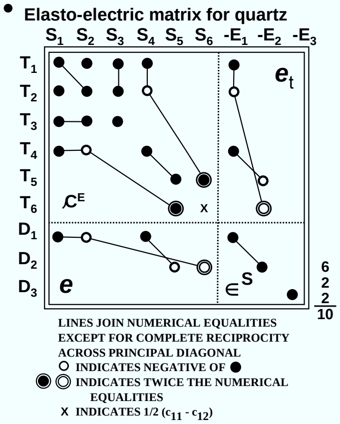

3-9

c_{ij} in the matrix on the left ≡ c^c in the box at the right, and $\in_{ij}$ in the matrix ≡ $\in^s$ at the right

----

T. R. Meeker, "Theory and Properties of Piezoelectric Resonators and Waves," in E. A. Gerber and A. Ballato, Precision Frequency Control, Vol. 1, pp. 48-118, Academic Press, 1985.

ANSI/IEEE Std **176**-1987 IEEE Standard on Piezoelectricity

A. Ballato, "Piezoelectricity: Old Effect, New Thrusts," IEEE Trans. UFFC, v.42, pp. 916-926, Sept. 1995

Mathematical Description - Continued

- Number of independent non-zero constants depend on crystal symmetry. For quartz (trigonal, class 32), there are 10 independent linear constants - 6 elastic, 2 piezoelectric and 2 dielectric. "Constants" depend on temperature, stress, coordinate system, etc.

- To describe the behavior of a resonator, the differential equations for Newton's law of motion for a continuum, and for Maxwell's equation* must be solved, with the proper electrical and mechanical boundary conditions at the plate surfaces. $\left(F = ma \Rightarrow \frac{\partial T_{ij}}{\partial x_j} = \rho\, \ddot{u}_i;\quad \overline{\nabla} \cdot \overline{D} = 0 \Rightarrow \frac{\partial D_i}{\partial x_i} = 0,\right.$
$E_i = -\frac{\partial \varphi}{\partial x_i};\ S_{ij} = \frac{1}{2}\left(\frac{\partial u_i}{\partial x_j} + \frac{\partial u_j}{\partial x_i}\right);$ etc.)

- Equations are very "messy" - they have never been solved in closed form for physically realizable three-dimensional resonators. Nearly all theoretical work has used approximations.

- Some of the most important resonator phenomena (e.g., acceleration sensitivity) are due to nonlinear effects. Quartz has numerous higher order constants, e.g., 14 third-order and 23 fourth-order elastic constants, as well as 16 third-order piezoelectric coefficients are known; nonlinear equations are extremely messy.

---

* Magnetic field effects are generally negligible; quartz is diamagnetic, however, magnetic fields can affect the mounting structure and electrodes.

-

Infinite Plate Thickness Shear Resonator

$$f_n = \frac{n}{2h}\sqrt{\frac{c_{ij}}{\rho}}, \quad n = 1, 3, 5...$$

Where f_n = resonant frequency of n-th harmonic
h = plate thickness
ρ = density
c_{ij} = elastic modulus associated with the elastic wave being propagated

$$T_f = \frac{d(\log f_n)}{dT} = \frac{1}{f_n}\frac{df_n}{dT} = \frac{-1}{h}\frac{dh}{dT} - \frac{1}{2\rho}\frac{d\rho}{dT} + \frac{1}{2c_{ij}}\frac{dc_{ij}}{dT}$$

where T_f is the linear temperature coefficient of frequency. The temperature coefficient of c_{ij} is negative for most materials (i.e., "springs" become "softer" as T increases). The coefficients for quartz can be +, - or zero (see next page).

3-11

The velocity of propagation, v, of a wave in the thickness direction of a thin plate, and the resonant frequency, f_n, of an infinite plate vibrating in a thickness mode are

$$v=\sqrt{(c_{ij}/\rho)}, \text{ and } f_n = n/2h\sqrt{(c_{ij}/\rho)}$$

respectively, where c_{ij} is the elastic stiffness associated with the wave being propagated, ρ is the density of the plate, and 2h is the thickness. The frequency can also be expressed (taking the logarithm of both sides) as

$$\log f_n = \log(n/2) - \log h + 1/2\ (\log c_{ij} - \log \rho)$$

Differentiating this equation gives the above expression for T_f.

Quartz expands when heated; dh/dT is positive along all directions, and $d\rho/dT$ is negative (see "Thermal Expansion Coefficients of Quartz" in chapter 4). The temperature coefficient of c_{ij} also varies with direction. It is fortunate that, in quartz, directions exist such that the temperature coefficient of c_{ij} balances out the effects of the thermal expansion coefficients, i.e., zero temperature coefficient cuts exist in quartz.

V. E. Bottom, Introduction to Quartz Crystal Unit Design, Van Nostrand Reinhold Company, 1982.

Quartz is Highly Anisotropic

- The properties of quartz vary greatly with crystallographic direction. For example, when a quartz sphere is etched deeply in HF, the sphere takes on a triangular shape when viewed along the Z-axis, and a lenticular shape when viewed along the Y-axis. The etching rate is more than 100 times faster along the fastest etching rate direction (the Z-direction) than along the slowest direction (the slow-X-direction).

- The thermal expansion coefficient is 7.8 x 10^{-6}/°C along the Z-direction, and 14.3 x 10^{-6}/°C perpendicular to the Z-direction; the temperature coefficient of density is, therefore, -36.4 x 10^{-6}/°C.

- The temperature coefficients of the elastic constants range from -3300 x 10^{-6}/°C (for C_{12}) to +164 x 10^{-6}/°C (for C_{66}).

- For the proper angles of cut, the sum of the first two terms in T_f on the previous page is cancelled by the third term, i.e., temperature compensated cuts exist in quartz. (See next page.)

See chapter 5, especially "Deeply Dissolved Quartz Sphere," for additional information about quartz and its anisotropy.

Zero Temperature Coefficient Quartz Cuts

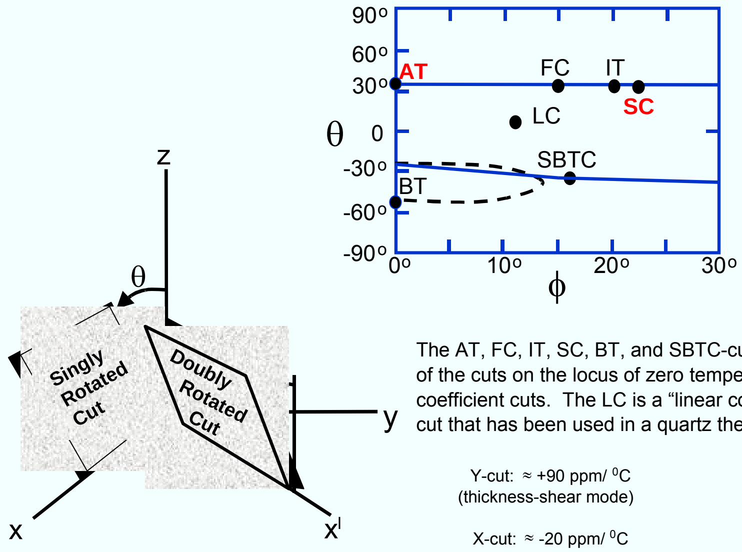

The AT, FC, IT, SC, BT, and SBTC-cuts are some of the cuts on the locus of zero temperature coefficient cuts. The LC is a “linear coefficient” cut that has been used in a quartz thermometer.

Y-cut: ≈ +90 ppm/ ^{0}C
(thickness-shear mode)

X-cut: ≈ -20 ppm/ ^{0}C
(extensional mode)

3-13

A. Ballato, "Doubly rotated thickness mode plate vibrators," in Physical Acoustics, Vol. XIII, pp. 115-181, Academic Press, 1977.

The locus of zero-temperature-coefficient cuts in quartz is shown above. The cuts usually have two-letter names, where the "T" in the name indicates a temperature-compensated cut; for instance, the AT-cut was the first temperature-compensated cut discovered. The FC, IT, BT, and SBTC-cuts are other cuts along the zero-temperature coefficient locus. These cuts were studied in the past (before the discovery of the SC-cut) for some special properties, but are rarely used today. The highest-stability crystal oscillators employ SC-cut crystal units. The X, Y, and Z directions have been chosen to make the description of properties as simple as possible. The Z-axis is an axis of threefold symmetry in quartz; in other words, the physical properties repeat every 120° as the crystal is rotated about the Z-axis.

A. Ballato, "Doubly Rotated Thickness Mode Plate Vibrators," in Physical Acoustics, Vol. XIII, W. P. Mason and R. N. Thurston, Eds., pp. 115-181, Academic Press, New York, 1977.

J. P. Buchanan, Handbook of Piezoelectric Crystals for Radio Equipment Designers, WADC Technical Report 56-156, October 1956 (692 pages), available from NTIS, AD 110448.

D. L. Hammond, C. A. Adams and P. Schmidt, "A Linear, Quartz Crystal, Temperature Sensing Element," ISA Transactions, vol. 4, pp. 349-354, 1965.

M. Valdois, B. K. Sinha, and J. J. Boy, “Experimental Verification of Stress Compensation in the SBTC-Cut,” IEEE Trans. on Ultrasonics, Ferroelectrics and Frequency Control, vol. 36, pp. 643-651, 1989.

Comparison of SC and AT-cuts

- **Advantages of the SC-cut**
  - Thermal transient compensated (allows faster warmup OCXO)
  - Static and dynamic f vs. T allow higher stability OCXO and MCXO
  - Better f vs. T repeatability allows higher stability OCXO and MCXO
  - Far fewer activity dips
  - Lower drive level sensitivity
  - Planar stress compensated; lower Δf due to edge forces and bending
  - Lower sensitivity to radiation
  - Higher capacitance ratio (less Δf for oscillator reactance changes)
  - Higher Q for fundamental mode resonators of similar geometry
  - Less sensitive to plate geometry - can use wide range of contours

- **Disadvantage of the SC-cut :** More difficult to manufacture for OCXO (but is easier to manufacture for MCXO than is an AT-cut for precision TCXO)

- **Other Significant Differences**
  - B-mode is excited in the SC-cut, although not necessarily in LFR's
  - The SC-cut is sensitive to electric fields (which can be used for compensation)

3-14

See the next chapter for specific comparisons between AT-cut and SC-cut resonators, e.g., see "Warmup of AT- and SC-cut Resonators".

A. Ballato, "Doubly Rotated Thickness Mode Plate Vibrators," Physical Acoustics, Vol. XIII, pp. 115-181, Academic Press, Inc., 1977.

J. A. Kusters, "The SC Cut Crystal - An Overview," Proc. IEEE Ultrasonics Symposium, pp. 402-409, 1981.

Mode Spectrograph of an SC-cut

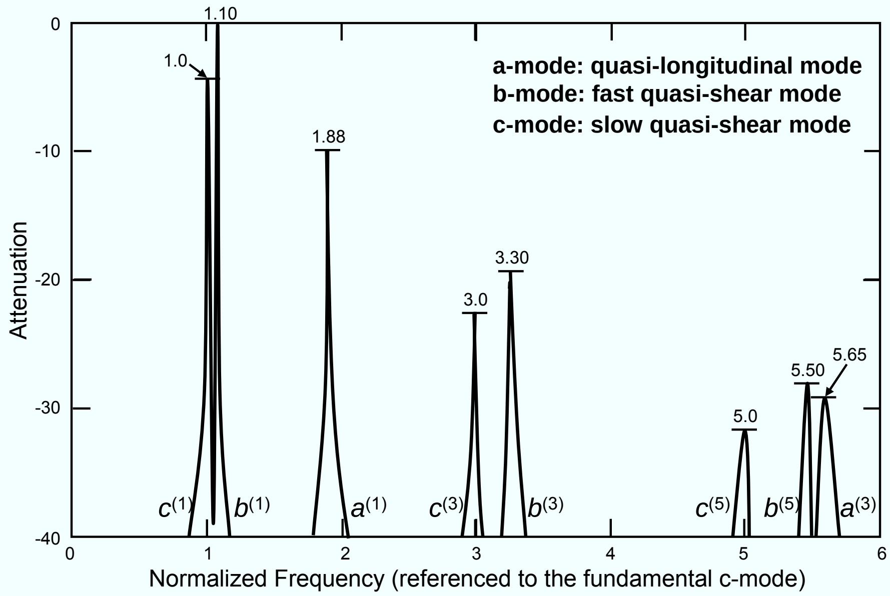

3-15

In the above mode spectrograph of an SC-cut resonator, the Nth overtone of mode m is labeled $m^{(N)}$ (after Ballato). The frequency of each resonance is normalized to that of the fundamental c-mode. The modal attenuations vary with resonator design. In the above example, the b-modes' strengths are greater than the c-modes' (which is often the case). Therefore, the oscillator must include mode selection circuitry in order to insure that the oscillator operates on the desired c-mode.

A. Ballato, "Piezoelectric Resonators," in B. Parzen, Design of Crystal and Other Harmonic Oscillators, pp. 66-122, John Wiley and Sons, Inc., 1983.

J. A. Kusters, M. C. Fischer, J. G. Leach, "Dual mode operation of temperature and stress compensated crystals," Proc. of the 32nd Annual Frequency Control Symposium, 1978. pp. 389-397.

R. Bourquin, J.J. Boy, B. Dulmet, “SC-cut Resonator With Reduction of b-mode Electrical Response,” Proc. 1997 IEEE Int'l Frequency Control Symposium, pp. 704-709.

SC- cut f vs. T for b-mode and c-mode

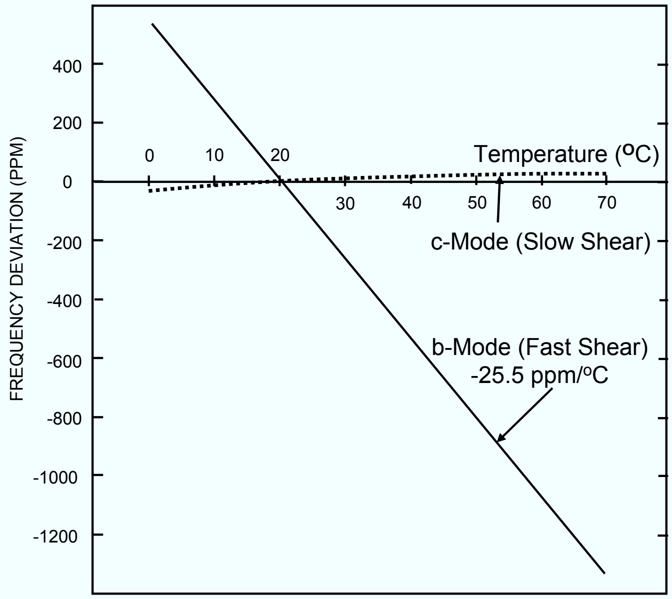

3-16

Shown above are frequency vs. temperature characteristics of the b-mode and c-mode of a 10 MHz 3rd overtone SC-cut resonator. The b-mode's f vs. T is monotonic, with a slope of about -25.5 ppm per degree C. The c-mode is temperature compensated; its exact f vs. T characteristic depends on the angles of cut, overtone, contour, etc. The b-mode's frequency is about 9.4% higher than the c-mode's (but it can range from ~9% to 10%, depending on design).

Both modes can be excited simultaneously, without the modes interfering with each other. The b-mode frequency can be used to instantaneously indicate the temperature of the resonator's active volume. Dual mode excitation of the b-mode and c-mode frequencies has been used for temperature compensation. In later work, however, dual mode excitation of the fundamental and third overtone c-modes was shown to be superior - see "Resonator Self-temperature Sensing" and subsequent pages in Chapter 2.

J. A. Kusters, M. C. Fischer, J. G. Leach, "Dual mode operation of temperature and stress compensated crystals," Proc. of the 32nd Annual Frequency Control Symposium, 1978. pp. 389-397.

B and C Modes Of A Thickness Shear Crystal

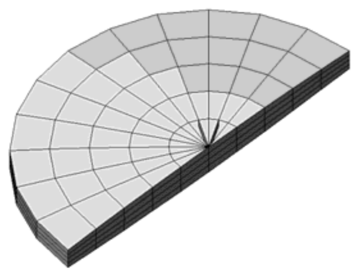

C MODE

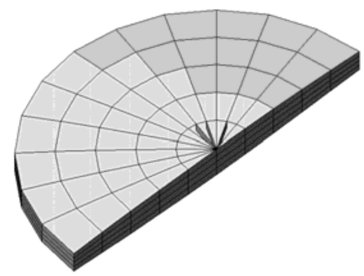

B MODE

CLICK ON FIGURES
TO START MOTION

3-17

Note that the c-mode and b-mode displacements are orthogonal.

This illustration and animation is “borrowed” from “Quartz Crystals vs. Their Environment: Time Bases or Sensors? (Keeping the World on Time and Your Tanks Full of Gas),” Errol P. EerNisse, 2000 UFFC Society Distinguished Lecture. (Animations require Discbfull.avi and diskcmode.avi.)

Singly Rotated and Doubly Rotated Cuts' Vibrational Displacements

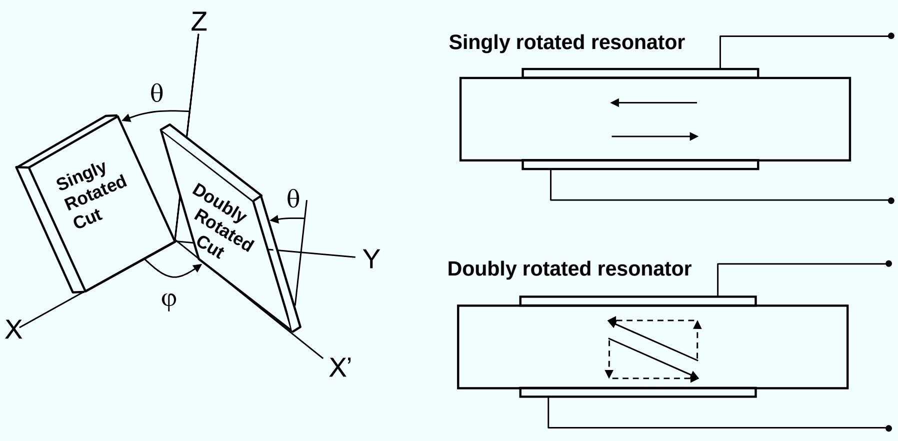

3-18

In a vibrating doubly rotated resonator (θ ≈ 35° and φ > 0°), the displacement is partly out of the plane of the plate, as is illustrated. By controlling the φ–angle, one may control the ratio of in-plane to out-of-plane displacements.

A sensor for sensing the properties of a fluid has been proposed based on this. In a fluid, the out-of-plane component of the displacement propagates a damped compressional wave, while the in-plane component propagates a damped shear wave. The frequency changes of doubly rotated resonators have been measured in glycerol solutions of a variety of concentrations. At each concentration, the frequency change was found to increase with increasing πηι–angle.

Y. Kim, J. R. Vig and A. Ballato, "Sensing the properties of liquids with doubly rotated resonators," Proc. 1998 IEEE Int'l Frequency Control Symp., 1998, pp. 660-666.

Resistance vs. Electrode Thickness

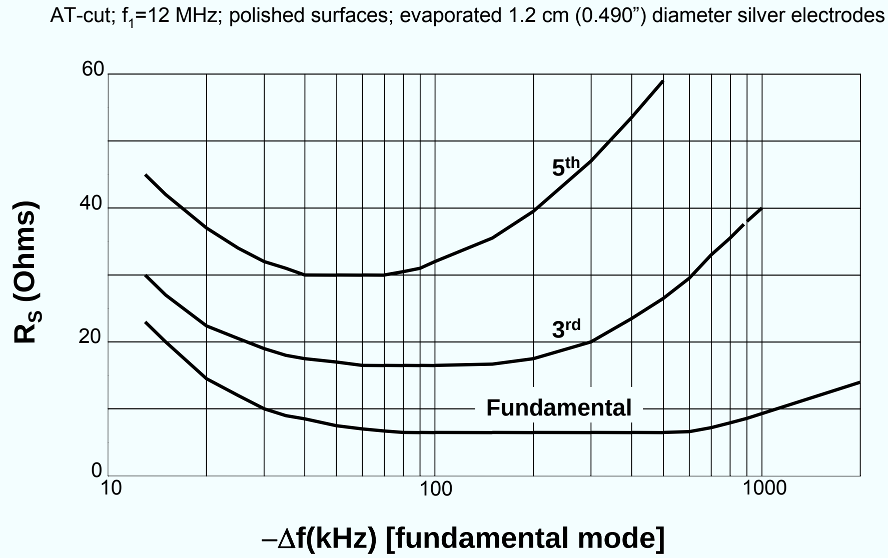

3-19

After the electrode deposition starts, the atoms on the quartz surface form islands through which no current flows. As the deposition continues, the islands grow. Eventually, the islands touch, form larger islands, then further coalesce to form a continuous film. At this point, R_s is large due to the high resistivities of the ultrathin films. As the film thickness (the "plateback") increases, the film resistivity decreases. Eventually, the Q of the resonator rather than the film resistance determines R_s. As the film becomes thick, losses in the film decrease the Q and increase the R_s.

The "Quartz Resonator Handbook…" referenced below suggests minimum and maximum platebacks for fundamental mode, 3rd overtone and 5th overtone resonators, and for Al, Ag and Au electrodes (p. 115, Table 5).

The figure above is adapted from the **"Quartz Resonator Handbook, Manufacturing Guide for AT Type Units,"** R.E. Bennett, Union Thermoelectric Division, p, 113, Figure 51, 1960. A copy of this publication can be found at http://www.ieee-uffc.org/archive (available to IEEE UFFC Society members).

C. A. Neugebauer, "Condensation, Nucleation, and Growth of Thin Films," in Handbook of Thin Film Technology, L. I. Maissel & R. Glang editors, Chapt. 8, McGraw Hill Book Co., 1970.

Resonator Packaging

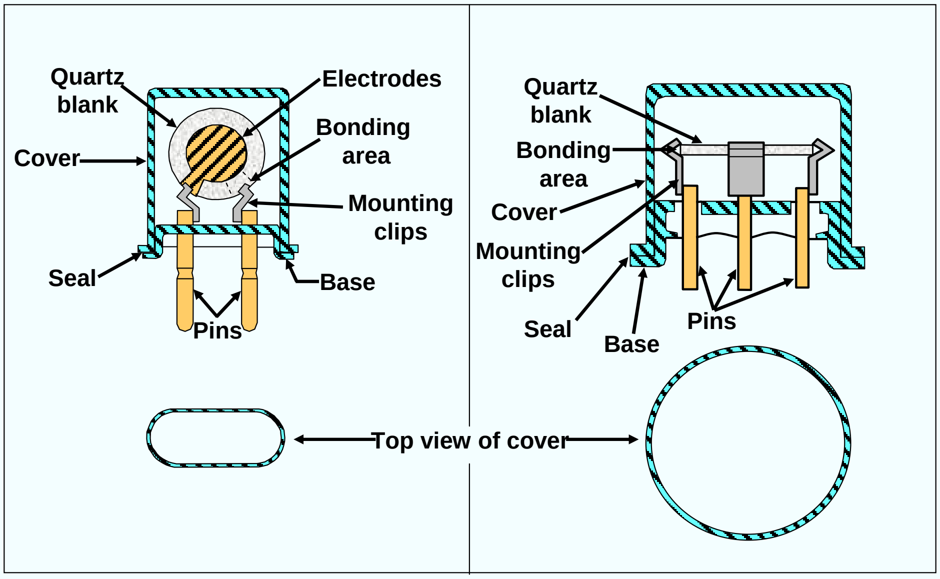

3-20

The above illustration shows the typical packages used for AT-cut and SC-cut resonators. Such packages are available in both metal and glass constructions. Other package types include surface mount, ceramic and metal flatpacks, and the cylindrical metal packages used for tuning fork resonators - see "Watch Crystal" later in this chapter.

J. A. Kusters, "Resonator and Device Technology," in E. A. Gerber and A. Ballato, Precision Frequency Control, Vol. 1, pp.161-183, Academic Press, 1985.

Equivalent Circuits

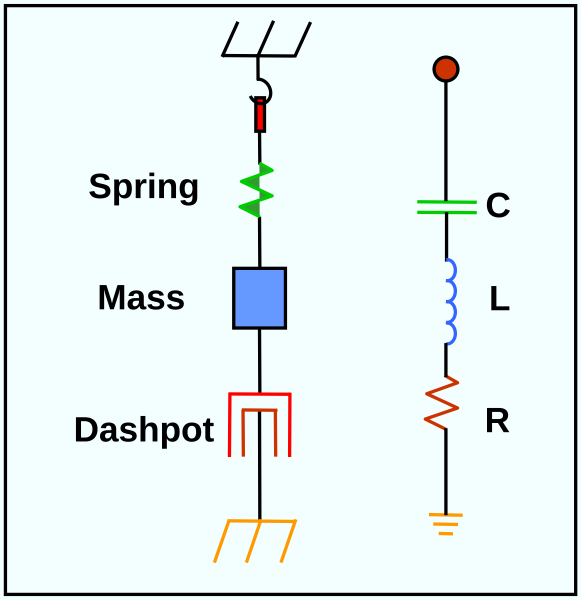

3-21

The mechanically vibrating system and the circuit shown above are "equivalent," because each can be described by the same differential equation. The mass, spring and damping element (i.e., the dashpot) correspond to the inductor, capacitor and resistor. The driving force corresponds to the voltage, the displacement of the mass to the charge on the capacitor, and the velocity to the current.

A crystal resonator is a mechanically vibrating system that is linked, via the piezoelectric effect, to the electrical world. In the (simplified) equivalent circuit (of one mode of vibration) of a resonator, on the next page, C_0 is called the "shunt" capacitance. It is the capacitance due to the electrodes on the crystal plate (plus the stray capacitances due to the crystal enclosure). The R_1, L_1, C_1 portion of the circuit is the "motional arm" which arises from the mechanical vibrations of the crystal. The C_0 to C_1 ratio is a measure of the interconversion between electrical and mechanical energy stored in the crystal, i.e., of the piezoelectric coupling factor, k, and C_1 is a measure of the crystal's "stiffness," i.e., its tunability - see the equation under the equivalent circuit on the next page. When a dc voltage is applied to the electrodes of a resonator, the C_0/C_1 is also a measure of the ratio of electrical energy stored in the capacitor formed by the electrodes to the energy stored elastically in the crystal due to the lattice strains produced by the piezoelectric effect. The C_0/C_1 is also a measure of the antiresonance-resonance frequency separation. (Let $r = C_0/C_1$, then $f_A - f_R \approx f_R/2r$, and $2r = (\pi N/2k)^2$, where N = 1,3,5...is the overtone number.)

Some of the numerous advantages of quartz crystal resonator over a tank circuit built from discrete R's, C's and L's are that the crystal is far stiffer and has a far higher Q than what could be built from normal discrete components. For example, a 5 MHz fundamental mode AT-cut crystal may have C_1 = 0.01 pF, L_1 = 0.1 H, R_1 = 5 Ω, and Q = 10^6. A 0.01pF capacitor is not available, since the leads attached to such a capacitor would alone probably contribute more than 0.01 pF. Similarly, a 0.1 H inductor would be physically large, it would need to include a large number of turns, and would need to be superconducting in order to have a $\leq 5\ \Omega$ resistance.

E. Hafner, "Resonator and Device Measurements," in E. A. Gerber and A. Ballato, Precision Frequency Control, Vol. 2, pp.1-44, Academic Press, 1985.

V. E. Bottom, Introduction to Quartz Crystal Unit Design, Van Nostrand Reinhold Company, 1982.

Equivalent Circuit of a Resonator

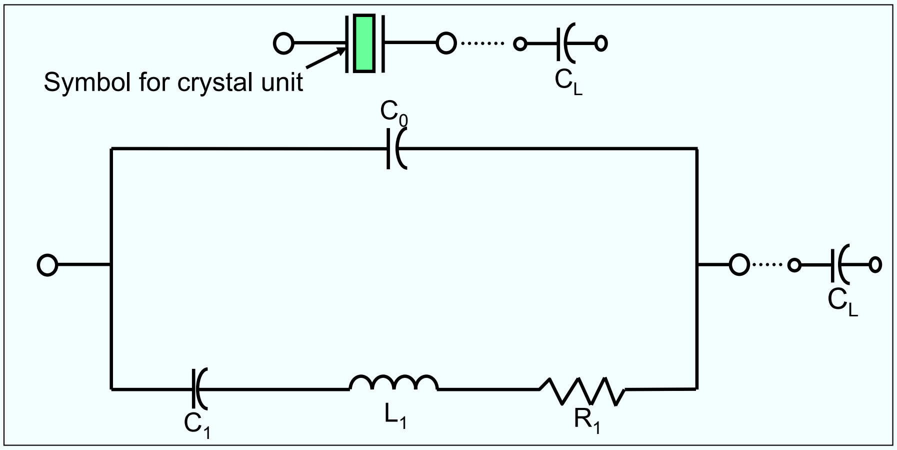

$$\frac{\Delta f}{f_S} \approx \frac{C_1}{2\left(C_0 + C_L\right)} \rightarrow$$

1. Voltage control (VCXO)
2. Temperature compensation (TCXO)

3-22

The oscillator designer treats the crystal unit as a circuit component and just deals with the crystal unit's equivalent circuit. Shown above is a simple equivalent circuit of a single-mode quartz resonator. A resonator is a mechanically vibrating system that is linked, via the piezoelectric effect, to the electrical world. A load capacitor C_L is shown in series with the crystal. C_0, called the "shunt" capacitance, is the capacitance due to the electrodes on the crystal plate plus the stray capacitances due to the crystal enclosure. The R_1, L_1, C_1 portion of the circuit is the "motional arm" which arises from the mechanical vibrations of the crystal.

The C_0 to C_1 ratio is a measure of the interconversion between electrical and mechanical energy stored in the crystal, i.e., of the piezoelectric coupling factor, k. C_0/C_1 increases with the square of the overtone number; the relationship of C_0/C_1 to k and N is $2C_0/C_1 = [\pi N/2k]^2$, where N is the overtone number. When a dc voltage is applied to the electrodes of a resonator, the capacitance ratio C_0/C_1 is also a measure of the ratio of electrical energy stored in the capacitor formed by the electrodes to the energy stored elastically in the crystal due to the lattice strains produced by the piezoelectric effect. The C_0/C_1 is also inversely proportional to the antiresonance-resonance frequency separation (i.e., the pole-zero spacing - see the page after next) which is an especially important parameter in filter applications. The slope of the reactance vs. frequency curve near f_s is inversely proportional to C_1, i.e., $\Delta X/(\Delta f/f) \sim 1/\pi f C_1$ near f_s, where X is the reactance. C_1 is, therefore, a measure of the crystal's "stiffness," i.e., its tunability. For a simple RLC circuit, the width of the resonance curve is inversely proportional to the quality factor Q, but in a crystal oscillator, the situation is complicated by the presence of C_0 and by the fact that the operating Q is lower than the resonator Q. For a quartz resonator, $Q = (2\pi f_s C_1 R_1)^{-1}$.

When the load capacitor is connected in series with the crystal, the frequency of operation of the oscillator is increased by a Δf, where Δf is given by the equation below the equivalent circuit. A variable load capacitor can thus be used to vary the frequency of the resonator-capacitor combination, which may be applied in, e.g., a VCXO or TCXO.

E. Hafner, "Resonator and Device Measurements," in E. A. Gerber and A. Ballato, Precision Frequency Control, Vol. 2, pp.1-44, Academic Press, 1985.

V. E. Bottom, Introduction to Quartz Crystal Unit Design, Chapters 6 and 7, Van Nostrand Reinhold Company, 1982.

Crystal Oscillator f vs. T Compensation

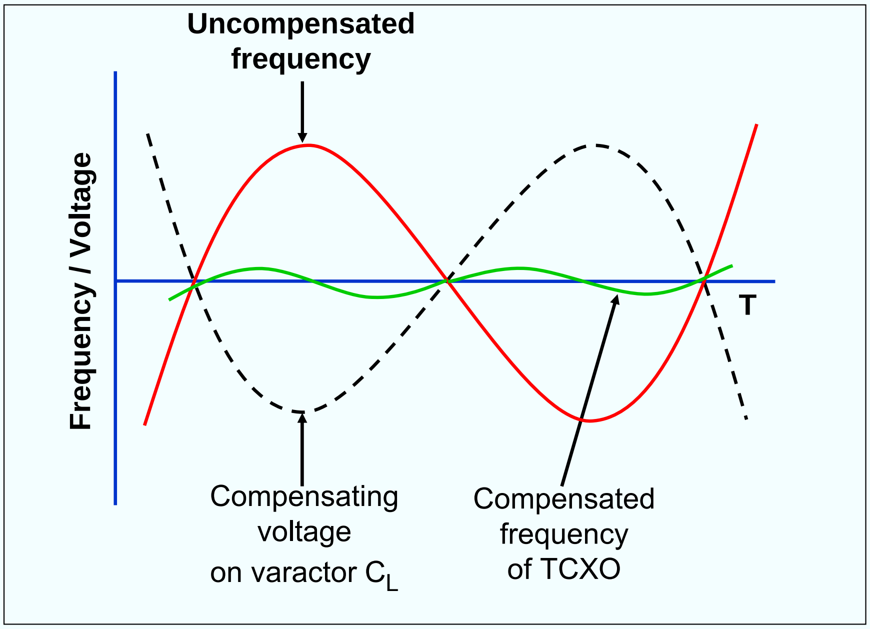

3-23

When the load capacitor is connected in series with the crystal, the frequency of operation of the oscillator is increased by a $\Delta f'$, where $\Delta f'$ is given by the equation on the previous page. When an inductor is connected in series with the crystal, the frequency of operation is decreased. The ability to change the frequency of operation by adding or changing a reactance allows for compensation of the frequency versus temperature variations of crystal units in TCXOs, and for tuning the output frequency of voltage controlled crystal oscillators (VCXO). In both, the frequency can be changed, e.g., by changing the voltage on a varactor.

Other means of temperature compensation include the use of a temperature sensitive reactance element such that the variations of the reactance with temperature compensate for the f vs. T variations of the resonator, and the use digital compensation techniques. The microcomputer compensated crystal oscillator (MCXO), which uses a high-accuracy digital compensation technique, is discussed in chapter 2.

M. E. Frerking, "Temperature Control and Compensation," in E. A. Gerber and A. Ballato, Precision Frequency Control, Vol. 2, pp.1-44, Academic Press, 1985.

M. E. Frerking, Crystal Oscillator Design and Temperature Compensation, Van Nostrand Reinhold Company, 1978.

S. Okano, T. Mitsuoka & T. Ohshima, "Direct-temperature Compensated Crystal Oscillator for Advanced VHF/UHF Radio Communication Systems," Proc. 34th Ann. Frequency Control Symposium, pp. 488-497, 1980.

Resonator Reactance vs. Frequency

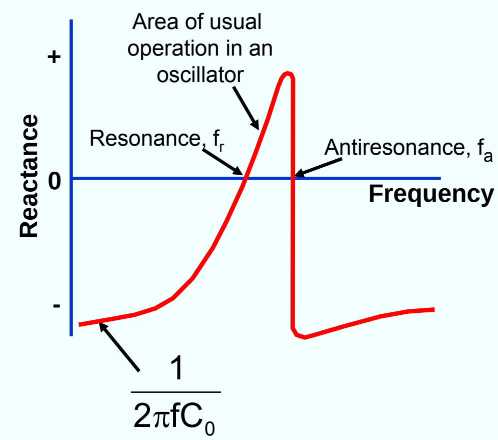

3-24

At frequencies far from the resonance frequency, the resonator is a simple parallel plate capacitor having a capacitance $C_o \cong k\varepsilon_o(A/t)$, where A is the area of the electrodes, t is the thickness of the plate, k is the dielectric constant and ε_o is the permittivity of free space. The reactance is zero at resonance, and it is maximum at the antiresonance frequency. The antiresonance to resonance separation, $f_a - f_r \approx f_r/2r' - r'/2Q^2$, where $r' = C_o/C_1$.

In most oscillator circuits, the frequency is in the region shown, where the resonator's reactance is inductive. An adjustable capacitance in series (or parallel) with the resonator can then used to adjust the frequency of oscillation.

The reactance vs. fractional frequency slope, $\Delta X/(\Delta f/f)$, is a measure of the resonator's "stiffness," i.e., the amount the resonator's frequency changes with load capacitance. The stiffer the resonator, the less the resonator's frequency changes with a change in load capacitance. Near f_S, $\Delta X/(\Delta f/f) = 1/(\pi f_S C_1)$. Overtone resonators are stiffer than fundamental mode units because the C_1 of overtone resonators is smaller than the C_1 of fundamental mode units.

A. Ballato, "Piezoelectric Resonators," in B. Parzen, Design of Crystal and Other Harmonic Oscillators, pp. 66-122, John Wiley and Sons, Inc., 1983.

E. Hafner, "Resonator and Device Measurements," in E. A. Gerber and A. Ballato, Precision Frequency Control, Vol. 2, pp.1-44, Academic Press, 1985.

V. E. Bottom, Introduction to Quartz Crystal Unit Design, Chapters 6 and 7, Van Nostrand Reinhold Company, 1982.

Equivalent Circuit Parameter Relationships

$$C_0 \cong \varepsilon \frac{A}{t} \qquad r \equiv \frac{C_0}{C_1}$$

$$f_S = \frac{1}{2\pi}\sqrt{\frac{1}{L_1 C_1}} \qquad f_a - f_S \cong \frac{f_S}{2r}$$

$$Q = \frac{1}{2\pi f_S R_1 C_1} \qquad \varphi = \frac{\omega L_1 - \frac{1}{\omega C_1}}{R_1}$$

$$\tau_1 = R_1 C_1 \cong 10^{-14}\,\mathrm{s} \qquad \frac{d\varphi}{df} \cong \frac{360}{\pi}\frac{Q}{f_s}$$

$$C_{1n} \approx \frac{r' C_{11}}{n^3} \qquad L_{1n} \approx \frac{n^3 L_{11}}{r'^3} \qquad R_{1n} \approx \frac{n^3 R_{11}}{r'} \qquad 2r = \left(\frac{\pi n}{2k}\right)^2$$

- n: Overtone number
- C_0: Static capacitance
- C_1: Motional capacitance
- C_{1n}: C_1 of n-th overtone
- L_1: Motional inductance
- L_{1n}: L_1 of n-th overtone
- R_1: Motional resistance
- R_{1n}: R_1 of n-th overtone
- ε: Dielectric permittivity of quartz $\approx$40 pF/m (average)
- A: Electrode area
- t: Plate thickness
- r: Capacitance ratio
- r': f_1/f_n
- f_s: Series resonance frequency $\approx f_R$
- f_a: Antiresonance frequency
- Q; Quality factor
- τ_1: Motional time constant
- ω: Angular frequency = $2\pi f$
- φ: Phase angle of the impedance
- k; Piezoelectric coupling factor =8.8% for AT-cut, 4.99% for SC

In the last row, the r' is the ratio between the fundamental mode and the n-th overtone frequencies. For example, when comparing the parameters of a 10 MHz fundamental mode and a 10 MHz 3rd overtone (of similar design), r' = 1, and when comparing the parameters of a 10 MHz fundamental mode resonator when excited at the fundamental mode, and when excited at the 3rd overtone frequency, i.e., at ~30 MHz, r' = 3.

What is Q and Why is it Important?

$$Q \equiv 2\pi \frac{\text{Energy stored during a cycle}}{\text{Energy dissipated per cycle}}$$

Q is proportional to the decay-time, and is inversely proportional to the linewidth of resonance (see next page).

- The higher the Q, the higher the frequency stability and accuracy **capability** of a resonator (i.e., high Q is a necessary but not a sufficient condition). If, e.g., $Q = 10^6$, then 10^{-10} accuracy requires ability to determine center of resonance curve to 0.01% of the linewidth, and stability (for some averaging time) of 10^{-12} requires ability to stay near peak of resonance curve to 10^{-6} of linewidth.
- Phase noise close to the carrier has an especially strong dependence on Q ($\mathcal{L}(f) \propto 1/Q^4$).

3-26

See the next page for other definitions of Q, and see chapter 5 for additional information about the Q of quartz resonators. When the signal is decaying, as shown on the next page, the energies in the definition above are averaged over the cycle. Close to the carrier, a factor of two difference in Q results in a factor of 16 difference in phase noise.

IEEE Std 100-1996, The IEEE Standard Dictionary of Electrical and Electronics Terms, http://shop.ieee.org/store/

H. Hellwig, "Frequency Standards and Clocks: A Tutorial Introduction," NBS Technical Note 616, 1977, Time and Frequency Division, NIST, Boulder, CO 80303.

V. B. Braginsky, V. P. Mitrofanov & V. I. Panov, **Systems with Small Dissipation**, The University of Chicago Press, 1985.

E. I. Green, "The Story of Q," American Scientist, pp. 584-595, 1955.

Decay Time, Linewidth, and Q

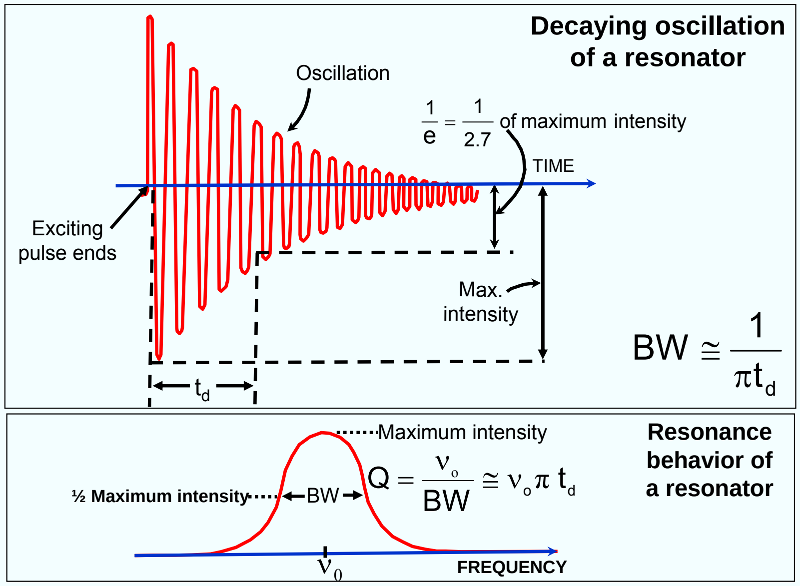

3-27

In addition to the definition on the previous page, equivalent definitions of Q are shown above. Q is the frequency divided by the bandwidth of resonance, and it also determines the rate at which a signal decays after the vibration excitation stops - the higher the Q, the narrower the bandwidth and the longer it takes for the excitation to decay. Q is proportional to the time it takes for the signal to decay to 1/e of the amplitude of vibration prior to the cessation of excitation. This relationship is used in one method (sometimes referred to as the “logarithmic decrement” method) of measuring Q.

The relationship between Q and decay time is also relevant to oscillator startup time. When an oscillator is turned on, it takes a finite amount of time for the oscillation to build up. The oscillator’s startup time depends on the loaded Q of the resonator in the sustaining circuit, and the loop gain of the circuit.

H. Hellwig, "Frequency Standards and Clocks: A Tutorial Introduction," NBS Technical Note 616, 1977, Time and Frequency Division, NIST, Boulder, CO 80303.

Factors that Determine Resonator Q

The **maximum Q** of a resonator can be expressed as:

$$Q_{max} = \frac{1}{2\pi f\tau},$$

where f is the frequency in Hz, and τ is an empirically determined "motional time constant" in seconds, which varies with the angles of cut and the mode of vibration. For example, $\tau = 1 \times 10^{-14}$s for the AT-cut's c-mode (Q_{max} = 3.2 million at 5 MHz), $\tau = 9.9 \times 10^{-15}$s for the SC-cut's c-mode, and $\tau = 4.9 \times 10^{-15}$s for the BT-cut's b-mode.

Other factors which affect the Q of a resonator include:

- Overtone
- Surface finish
- Material impurities and defects
- Mounting stresses
- Bonding stresses
- Temperature
- Electrode geometry and type
- Blank geometry (contour, dimensional ratios)
- Drive level
- Gases inside the enclosure (pressure, type of gas)
- Interfering modes
- Ionizing radiation

3-28

The motional time constant $\tau = R_1C_1$ (= 10^{-14} s for an AT-cut) is related to the internal friction, i.e., to the attenuation of an acoustic wave as the wave travels in a resonator. It is independent of frequency.

See also "Ions in Quartz…" and "Internal Friction in Quartz" at the end of Chapter 5.

A. Ballato, "Piezoelectric Resonators," in B. Parzen, Design of Crystal and Other Harmonic Oscillators, pp. 66-122, John Wiley and Sons, Inc., 1983.

V. B. Braginsky, V. P. Mitrofanov & V. I. Panov, **Systems with Small Dissipation**, The University of Chicago Press, 1985.

Resonator Fabrication Steps

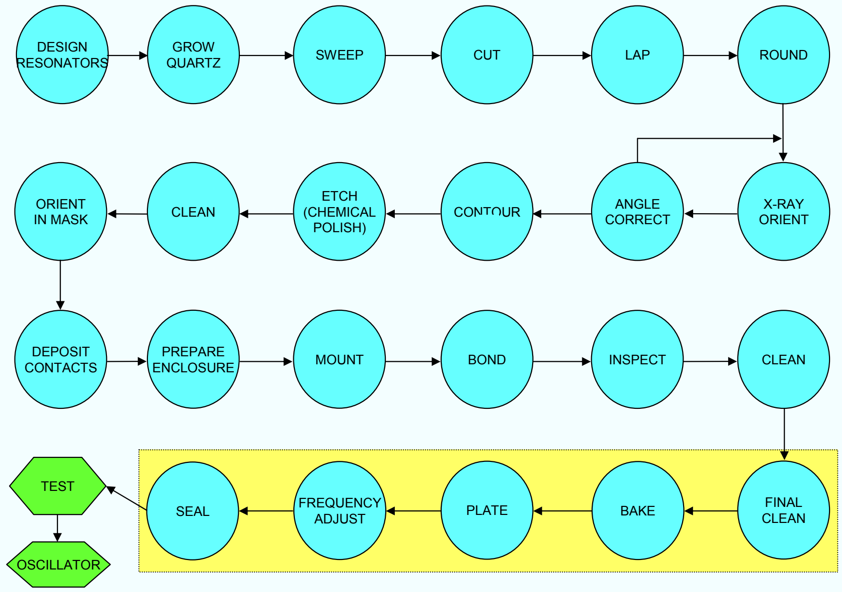

3-29

In the manufacturing of typical quartz resonators, wafers are cut from a quartz crystal bar into plates (“blanks”), along precisely controlled directions with respect to the crystallographic axes. The cutting is usually done with a slurry saw. This saw consists of a set of ~100 thin, stretched metal bands moving back and forth across multiple quartz bars in a flood of abrasive slurry. The properties of the resonator depend strongly on the angles of cut (see chapter 4). The angles of cut are determined by x-ray diffraction. After shaping to required dimensions, lapping, etching, (polishing) and cleaning, metal electrodes are applied to the plates which are mounted into holder structures (see “Resonator Packaging” earlier in this chapter). The plates are bonded to the mounting clips of the holder with, e.g., a silver-filled epoxy or polyimide. The assembly, called a *crystal unit* (or *crystal* or *resonator*) is hermetically sealed.

The above flow chart shows the major steps in the fabrication of a resonator. Although all the steps can affect the stability, the steps shown in the box are usually the most important with respect to the long term stability of the resonator. Ideally, these final steps should be performed in an ultrahigh vacuum. Ultrahigh vacuum baking immediately before hermetic sealing is highly desirable in order to produce low aging, especially if the resonator is exposed to air after frequency adjustment. (See “Aging Mechanisms” in chapter 4.)

Quartz growing, sweeping and etching/chemical-polishing are discussed in chapter 5.

W.L. Bond, Crystal Technology, John Wiley & Sons, New York, 1976.

J. A. Kusters, “Resonator and Device Technology," in E. A. Gerber and A. Ballato, Precision Frequency Control, Vol. 1, pp.161-183, Academic Press, 1985.

X-ray Orientation of Crystal Plates

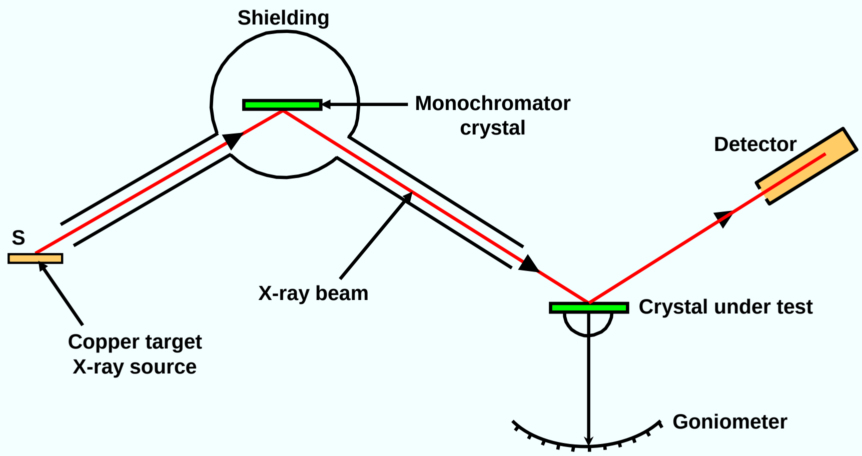

Double-crystal x-ray diffraction system

3-30

The frequency vs. temperature characteristics of resonators depend on the angles of cut of the quartz plate with respect to the crystallographic axes (see the section of Chapter 4 starting with “Quartz Wristwatch Accuracy vs. Temperature”). In some applications, seconds of arc accuracies are required. Because of imperfections in the cutting techniques (and in the quartz), the angles of cut of each blank must be measured, the blanks must be sorted, and, if necessary, angle-corrected in order to achieve the required angle-of-cut precision.

Double-crystal X-ray diffraction is generally used to measure the angles of cut - via measuring the angle between the major surface of a blank and a specified set of atomic planes. X-rays are reflected from atomic planes in a crystal in accordance with Bragg’s law: $n\lambda = 2d \sin \theta$, where n is an integer, λ is the wavelength of the reflected X-rays, d is the distance between the reflecting atomic planes, and θ is the “Bragg angle,” the angle at which the peak of the reflection occurs. In most X-ray orientation systems, the $K\alpha$ radiation from a copper target is used because the wavelength of this radiation is near the typical atomic spacings.

In the above drawing, the monochromator crystal serves to collimate the X-rays (which allows a more accurate determination of the Bragg angle than is possible with a single-crystal orientation system), and the goniometer allows variation of the angle of incidence of the X-rays and the determination of the angle at which the reflection is maximum. When a laser is used to define the plane of the blank, a measurement precision of ~2 seconds is possible.

W.L. Bond, Crystal Technology, John Wiley & Sons, New York, 1976.

R. A. Heising, Quartz Crystals for Electrical Circuits, D. Van Nostrand Co., 1946.

J. A. Kusters, “Resonator and Device Technology," in E. A. Gerber and A. Ballato, Precision Frequency Control, Vol. 1, pp.161-183, Academic Press, 1985.

V. E. Bottom, Introduction to Quartz Crystal Unit Design, Van Nostrand Reinhold Company, Chapter 11, 1982.

J.R. Vig, “A High Precision Laser Assisted X-Ray Goniometer For Circular Plates,” Proc. 29th Ann. Symposium on Frequency Control, pp. 240-247, 1975.

Contamination Control

Contamination control is essential during the fabrication of resonators because contamination can adversely affect:

- Stability (see chapter 4)
  - aging
  - hysteresis
  - retrace
  - noise
  - nonlinearities and resistance anomalies (high starting resistance, second-level of drive, intermodulation in filters)
  - frequency jumps?
- Manufacturing yields
- Reliability

3-31

-

To illustrate the importance of contamination control, consider an AT-cut resonator. The lattice spacing is ~0.52 nm, and the frequency (f)-thickness (t) product is 1.66 MHz-mm. Therefore, a 10 MHz 3rd overtone (~3 MHz fundamental mode) AT-cut quartz plate is about 1 million atomic layers thick.

As $f \propto 1/t$, it follows that $\Delta f/f = -\Delta t/t$. Therefore, for $t = 10^6$ atomic layers, an aging rate of 1×10^{-10} per day requires that $\Delta t/t < 10^{-4}$ atomic layers per day.

This is not easily achieved because in a vacuum, if all the molecules striking a surface stick:

- At 10^{-6} torr, a monolayer forms in 1 second; 10^{-4} monolayer in 10^{-4} s
- Even at 10^{-9} torr, a monolayer forms in 1000 s (= 16 min); 10^{-4} monolayer forms in 0.1 s.

Therefore, it is essential that surface contamination be removed from the resonator and enclosure surfaces prior to hermetically sealing the resonators. Transfer of contamination to and from the resonator's surfaces is one of the important causes of the instabilities listed above.

Surface contamination can also leads to poor or nonuniform adhesion of the electrodes and bonding agents, which can lead to yield and reliability problems. Particulate contamination can lead to high starting resistance (i.e., high resistance at low drive levels), second-level of drive effects, and intermodulation in crystal filters. Unfiltered factory air typically contains 2 million to 10 million > 0.5 μm particles per m^3, and a slowly walking person emits > 1 million such particles per minute.

Handbook of Semiconductor Wafer Cleaning Technology, W. Kern editor, Noyes Publications, Mill Rd. at Grand Ave., Park Ridge, NJ 07656, U.S.A., 1992

Treatise on Clean Surface Technology, edited by K. L. Mittal, Plenum Press, 1987.

Environmental Control in Electronic Manufacturing, edited by P. W. Morrison, Van Nostrand Reinhold, 1973.

Handbook of Thin Film Technology, L. I. Maissel & R. Glang editors, Chapt. 2, McGraw Hill Book Co., 1970.

Contamination Control Handbook, NASA Publication SP-5076, 1969; NTIS accession no. N70-13566.

Crystal Enclosure Contamination

The enclosure and sealing process can have important influences on resonator stability.

- A monolayer of adsorbed contamination contains ~ 10^{15} molecules/cm^2 (on a smooth surface)
- An enclosure at 10^{-7} torr contains ~10^9 gaseous molecules/cm^3

Therefore:

In a 1 cm^3 enclosure that has a monolayer of contamination on its inside surfaces, there are ~10^6 times more adsorbed molecules than gaseous molecules when the enclosure is sealed at 10^{-7} torr. The desorption and adsorption of such adsorbed molecules leads to aging, hysteresis, noise, etc.

3-32

Enclosure Outgassing Example: Let the average outgassing rate of an enclosure during the 1st day after it is hermetically sealed = 2 x 10^{-9} torr liter/sec/cm^2, let the enclosure volume = 1cm^3, let the enclosure area = 5cm^2, and let the sealing pressure = 0. Then, at the end of the first day after sealing, the pressure inside the enclosure will have risen to (2 x 10^{-9}) (10^3) (86,000) (5) torr = 0.86 torr.

The number of molecules in the enclosure is then

$$(0.86/760)*(6.02 \times 10^{23}) /22{,}400 = 3.0 \times 10^{16} \text{ molecules.}$$

If a blank diameter is 14mm and the lattice spacing is 5 x 10^{-8} cm, then number of lattice sites on blank is

$$3.1 \text{ cm}^2/(5 \times 10^{-8} \text{ cm})^2 = 1.2 \times 10^{15} \text{ lattice sites.}$$

Therefore there are 3.0 x 10^{16}/1.2 x 10^{15} = 25 outgassed molecules per lattice site.

If the enclosure had been vacuum baked at, e.g., > 250 ^{0}C just before sealing, then the outgassing rate would have been about 1000 times lower (at 20 ^{0}C), and the aging and retrace characteristics would have been substantially better.

Desorption rate (the time it takes before a molecule desorbs from a surface) depends exponentially on temperature. A contaminant molecule that did not desorb during a > 250 ^{0}C bake is unlikely to desorb at the normal operating temperatures of a resonator (i.e., the molecule will have a long lifetime on the surface).

What is an "f-squared"?

It is standard practice to express the thickness removed by lapping, etching and polishing, and the mass added by the electrodes, in terms of frequency change, Δf, in units of "f^2", where the Δf is in kHz and f is in MHz. For example, etching a 10MHz AT-cut plate $1f^2$ means that a thickness is removed that produces Δf= 100 kHz; and etching a 30 MHz plate $1f^2$ means that the Δf= 900 kHz. In both cases, $\Delta f=1f^2$ produces the same thickness change.

To understand this, consider that for a thickness-shear resonator (AT-cut, SC-cut, etc.)

$$f = \frac{N}{t}$$

where f is the fundamental mode frequency, t is the thickness of the resonator plate and N is the frequency constant (1661 MHz•μm for an AT-cut, and 1797 MHz•μm for a SC-cut's c-mode). Therefore,

$$\frac{\Delta f}{f} = -\frac{\Delta t}{t}$$

and,

$$\Delta t = -N\frac{\Delta f}{f^2}$$

So, for example, $\Delta f = 1f^2$ corresponds to the same thickness removal for all frequencies. For an AT-cut, Δt=1.661 μm of quartz (=0.83 μm per side) per f^2. An important advantage of using units of f^2 is that frequency changes can be measured much more accurately than thickness changes. The reason for expressing Δf in kHz and f in MHz is that by doing so, the numbers of f^2 are typically in the range of 0.1 to 10, rather than some very small numbers.

-

Milestones in Quartz Technology

1880	Piezoelectric effect discovered by Jacques and Pierre Curie
1905	First hydrothermal growth of quartz in a laboratory - by G. Spezia
1917	First application of piezoelectric effect, in sonar
1918	First use of piezoelectric crystal in an oscillator
1926	First quartz crystal controlled broadcast station
1927	First temperature compensated quartz cut discovered
1927	First quartz crystal clock built
1934	First practical temp. compensated cut, the AT-cut, developed
1949	Contoured, high-Q, high stability AT-cuts developed
1956	First commercially grown cultured quartz available
1956	First TCXO described
1972	Miniature quartz tuning fork developed; quartz watches available
1974	The SC-cut (and TS/TTC-cut) predicted; verified in 1976
1982	First MCXO with dual c-mode self-temperature sensing

3-34

The Frequency Control website <http://www.ieee.org/uffc/fc> contains a collection of historical papers on both quartz and atomic frequency control technologies.

W. A. Marrison, "The Evolution of the Quartz Crystal Clock," Bell System Technical Journal, Vol. 27, pp. 510-588, 1948.

F. D. Lewis, "Frequency and Time Standards," Proc. of the Institute of Radio Engineers, pp. 1046-1068, Sept. 1955.

V. E. Bottom, "A History of the Quartz Crystal Industry in the USA," Proc. 35th Annual Symposium on Frequency Control, pp. 3-12, 1981.

Quartz Resonators for Wristwatches

<u>Requirements:</u>

- Small size
- Low power dissipation (including the oscillator)
- Low cost
- High stability (temperature, aging, shock, attitude)

These requirements can be met with 32,768 Hz quartz tuning forks

3-35

E. Momosaki, “A Brief Review of Progress in Quartz Tuning Fork Resonators,” Proc. 1997 IEEE Int'l Frequency Control Symposium, pp. 552-565, 1997.

Why 32,768 Hz?

32,768 = 2^{15}

- In an analog watch, a stepping motor receives one impulse per second which advances the second hand by 6º, i.e., 1/60th of a circle, every second.
- Dividing 32,768 Hz by two 15 times results in 1 Hz.
- The 32,768 Hz is a compromise among size, power requirement (i.e., battery life) and stability.

32,768
16,384
8,192
4,096
2,048
1,024
512
256
128
64
32
16
8
4
2
1

-

Quartz Tuning Fork

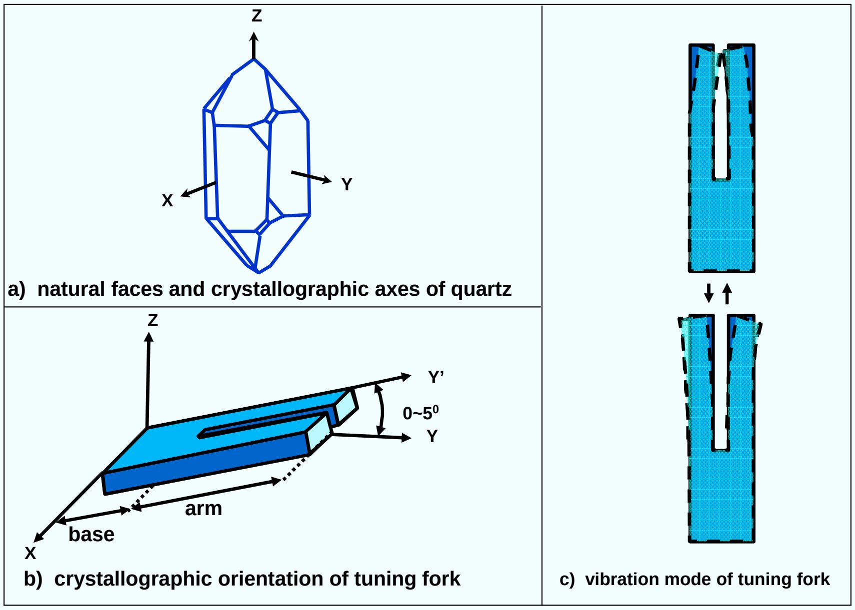

a) natural faces and crystallographic axes of quartz

b) crystallographic orientation of tuning fork

c) vibration mode of tuning fork

3-37

See also “Quartz Wristwatch Accuracy vs. Temperature” in Chapter 4, and “Tuning Fork Resonator Sensors” in Chapter 9.

E. Momosaki, “A Brief Review of Progress in Quartz Tuning Fork Resonators,” Proc. 1997 IEEE Int'l Frequency Control Symposium, pp. 552-565, 1997.

J. H. Staudte, “Subminiature Quartz Tuning Fork Resonator,” Proc. 27th Ann. Symp. on Frequency Control, pp. 50-54, 1973.

Watch Crystal

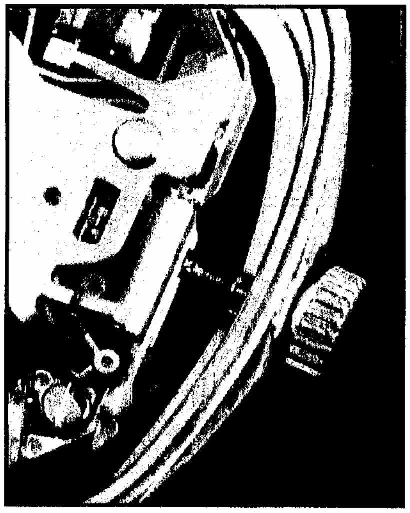

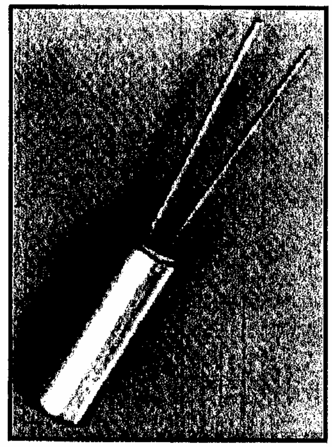

2 mm diameter x 6 mm tall cylinder
(0.08" diameter x 0.24" tall)

More than 10^9 tuning fork resonators are produced annually - mostly for wristwatches. In spite of the numerous steps and the precision required to make such a resonator, the wholesale price of a tuning fork resonator (in 1999) was ~$0.1.

Lateral Field Resonator

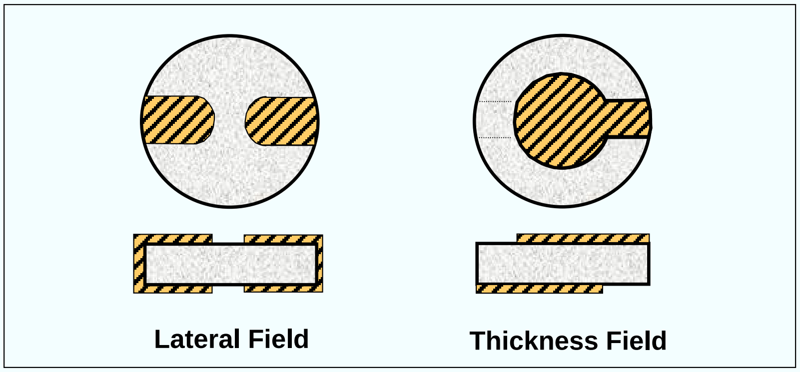

In lateral field resonators (LFR): 1. the electrodes are absent from the regions of greatest motion, and 2. varying the orientation of the gap between the electrodes varies certain important resonator properties. LFRs can also be made with electrodes on only one major face. Advantages of LFR are:

- Ability to eliminate undesired modes, e.g., the b-mode in SC-cuts
- Potentially higher Q (less damping due to electrodes and mode traps)
- Potentially higher stability (less electrode and mode trap effects, smaller C_1)

3-39

The LFR above shows electrodes on both major faces of the quartz plate. LFRs can also be made with electrodes on only one major face (e.g., only on the top).

A. W. Warner, "Measurement of Plano-Convex SC Quartz Blanks Using Lateral Field Excitation," Proc. 42nd AnnualSymposium on Frequency Control, pp. 202-204, 1988, AD-A217275.

Electrodeless (BVA) Resonator

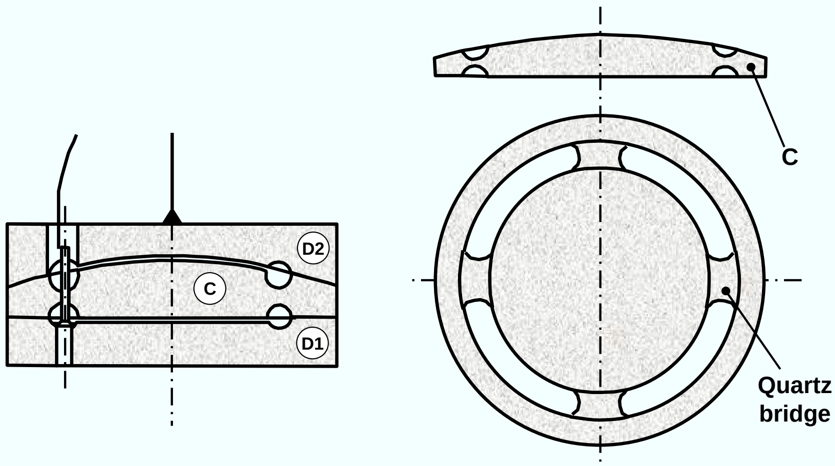

Side view of BVA_2 resonator construction

Side and top views of center plate C

BVA resonators are designed primarily to minimize stresses due to the mounting structure and the instabilities due to the electrodes (see "Stresses on a Quartz Resonator Plate" and subsequent pages in the next chapter). The BVA_2 structure shown above consists of three quartz plates of the same angles of cut and azimuthal orientation. The resonator plate is the plate "C" in the center. The active part of plate C is separated from the outer inactive part near the edges by means of cutouts, and the active area is connected to the inactive area by means of small quartz bridges. The outside plates D1 and D2 contact the C plate only outside the cutouts. The electrodes, deposited onto the center areas of D1 and D2, are separated from the active area of the resonator by means of small, 5 μm to 50 μm, gaps.

The best resonator short term stability measurements reported to date have been obtained with BVA resonators, i.e., $\sigma_y(\tau)$ of parts in 10^{14} at the flicker floor (see chapter 4).

R. J. Besson, "A New 'Electrodeless' Resonator Design," Proc. 31st Ann. Symp. on Frequency Control," pp. 147-152, 1977

R. J. Besson, J-J Boy, M. M. Maurey, "BVA Resonators and Oscillators: A Review. Relation with Space Requirements and Quartz Material Characterization," Proc. 1995 IEEE Int'l Frequency Control Symposium, pp. 590-599, 1995

CHAPTER 4
Oscillator Stability

4

E. A. Gerber and A. Ballato, Precision Frequency Control, Academic Press, 1985

P. Kartaschoff, Frequency and Time, Academic Press, 1978.

A. Ballato, "Piezoelectric Resonators," in B. Parzen, Design of Crystal and Other Harmonic Oscillators, John Wiley & Sons, 1983.

Characterization of Clocks and Oscillators, edited by D. B. Sullivan, et al., NIST Technical Note 1337, March 1990. Time & Frequency Div., NIST, 325 Broadway, Boulder, CO 80303.

J. R. Vig & A. Ballato, "Frequency Control Devices," in Ultrasonic Instruments & Devices II, edited by R.N. Thurston, A. D. Pierce, vol. ed. E. Papadakis, Physical Acoustics Vol. XXIV, Academic Press, pp. 209-273, 1999.

T. R. Meeker, and J. R. Vig, "The Aging of Bulk Acoustic Wave Resonators, Oscillators and Filters," Proc. 45th Ann. Symp. on Frequency Control 1991, IEEE Cat. No. 91CH2965-2.

J. R. Vig & F. L. Walls, "Fundamental Limits on the Frequency Instabilities of Quartz Crystal Oscillators," Proc. 1994 IEEE Int'l Frequency Control Symposium, pp. 506-523, 1994.

The Units of Stability in Perspective

- What is one part in 10^{10} ? (As in 1×10^{-10}/day aging.)
  - ~1/2 cm out of the circumference of the earth.
  - ~1/4 second per human lifetime (of ~80 years).
- Power received on earth from a GPS satellite, -160 dBW, is as "bright" as a flashlight in Los Angeles would look in New York City, ~5000 km away (neglecting earth's curvature).
- What is -170 dB? (As in -170 dBc/Hz phase noise.)
  - -170 dB = 1 part in $10^{17} \approx$ thickness of a sheet of paper out of the total distance traveled by all the cars in the world in a day.

4-1

The human mind is limited in its ability to understand very small and very large numbers. Above is an attempt to make the small numbers used in the frequency and time field a bit more understandable.

GPS analogy is courtesy of Raymond Filler, March 2004.

Accuracy, Precision, and Stability

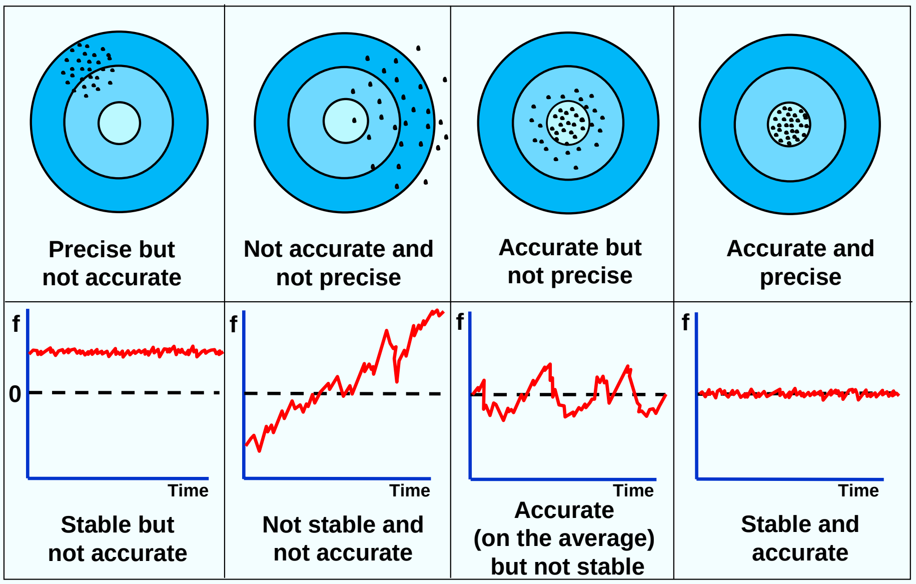

4-2

The terms accuracy, stability, and precision are often used in describing an oscillator's quality. Above is an illustration of the meanings of these terms for a marksman and for a frequency source. (For the marksman, each bullet hole's distance to the center of the target is the "measurement.") **Accuracy** is the extent to which a given measurement, or the average of a set of measurements for one sample, agrees with the definition of the quantity being measured. It is the degree of "correctness" of a quantity. **Reproducibility** is the ability of a single frequency standard to produce the same frequency, without adjustment, each time it is put into operation. From the user's point of view, once a frequency standard is calibrated, reproducibility confers the same advantages as accuracy. **Stability** describes the amount something changes as a function of parameters such as time, temperature, shock, and the like. **Precision** is the extent to which a given set of measurements of one sample agrees with the mean of the set. (A related meaning of the term is used as a descriptor of the quality of an instrument, as in a "precision instrument." In that context, the meaning is usually defined as accurate and precise, although a precision instrument can also be inaccurate and precise, in which case the instrument needs to be calibrated.)

The military specification for crystal oscillators, MIL-PRF-55310D*, defines “Overall Frequency Accuracy” as “6.4.33 Overall frequency accuracy. The maximum permissible frequency deviation of the oscillator frequency from the assigned nominal value due to all combinations of specified operating and nonoperating parameters within a specified period of time. In the general case, overall accuracy of an oscillator is the sum of the absolute values assigned to the following:

a. The initial frequency-temperature accuracy (see 6.4.24).

b. Frequency-tolerances due to supply voltage changes (see 6.4.17) and other environmental effects (see 6.4.12).

Total frequency change from an initial value due to frequency aging (see 6.4.11) at a specified temperature.”

The International System (SI) of units for time and frequency (the second and Hz, respectively) are obtained in laboratories using very accurate frequency standards called primary standards. A primary standard operates at a frequency calculable in terms of the SI definition of the second**: "the duration of 9,192,631,770 periods of the radiation corresponding to the transition between the two hyperfine levels of the ground state of the cesium atom 133”.

* MIL-PRF-55310, http://www.dscc.dla.mil/Programs/MilSpec/ListDocs.asp?BasicDoc=MIL-PRF-55310

** XIIIth General Conference of Weights and Measures, Geneva, Switzerland, October 1967.

Influences on Oscillator Frequency

- **Time**
  - Short term (noise)
  - Intermediate term (e.g., due to oven fluctuations)
  - Long term (aging)
- **Temperature**
  - Static frequency vs. temperature
  - Dynamic frequency vs. temperature (warmup, thermal shock)
  - Thermal history ("hysteresis," "retrace")
- **Acceleration**
  - Gravity (2g tipover)
  - Vibration
  - Acoustic noise
  - Shock
- **Ionizing radiation**
  - Steady state
  - Pulsed
  - Photons (X-rays, γ-rays)
  - Particles (neutrons, protons, electrons)
- **Other**
  - Power supply voltage
  - Atmospheric pressure (altitude)
  - Humidity
  - Load impedance
  - Magnetic field

4-3

Many factors influence the frequency stability of an oscillator. Changes in the environment can cause especially large instabilities. For example, orders of magnitude (tens of dBs) changes can be observed when the phase noise of an oscillator is measured in a quiet laboratory environment, and in a vibrating environment, such as a moving vehicle.

Idealized Frequency-Time-Influence Behavior

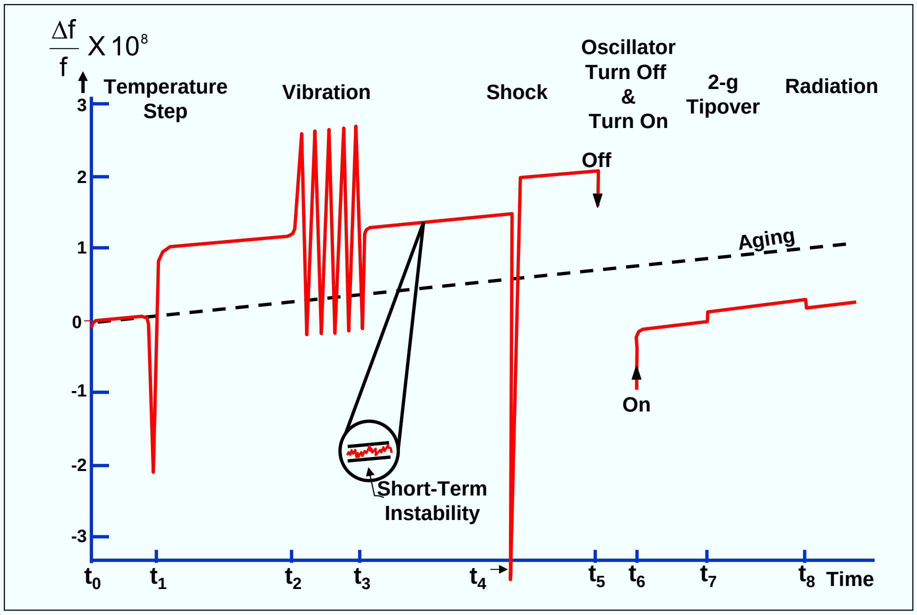

4-4

Shown above are the major types of oscillator frequency instabilities. The pages that follow show each of the changes, and some others, in more detail.

Aging and Short-Term Stability

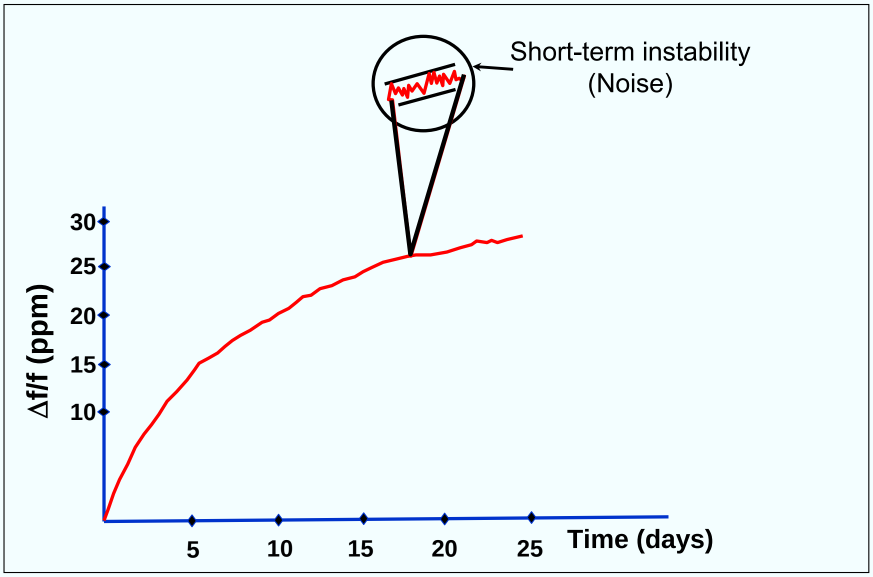

4-5

The difference between aging and short-term instability, i.e., noise, is illustrated above. One is a systematic effect that is observed over long periods of time (days to years), whereas the other is random, observed over periods that are typically measured in fractions of a second to minutes. Over periods of hours, a combination of systematic and random effects are usually observed. The frequency vs. time characteristics over such periods often appear to be random walk (at least some of which is usually environmentally caused).

"Aging" and "drift" have occasionally been used interchangeably in the frequency control literature. However, in 1990, recognizing the "need for common terminology for the unambiguous specification and description of frequency and time standard systems," the CCIR adopted a glossary of terms and definitions. According to this glossary, aging is "the systematic change in frequency with time due to internal changes in the oscillator." Added to the definition is: "Note - It is the frequency change with time when factors external to the oscillator (environment, power supply, etc.) are kept constant." Drift is defined as "the systematic change in frequency with time of an oscillator." Drift is due to a combination of factors, i.e., it due to aging plus changes in the environment and other factors external to the oscillator. Aging is what one specifies and what one measures during oscillator evaluation. Drift is what one observes in an application. For example, the drift of an oscillator in a spacecraft is due to (the algebraic sum of) aging and frequency changes due to radiation, temperature changes in the spacecraft, and power supply changes.

CCIR Recommendation No. 686, "[TF.686-1] Glossary," CCIR 17th Plenary Assembly, Vol. VII, "Standard Frequency and Time Signals (Study Group 7)," 1990. Consultative Committee on International Radio (CCIR); copies available from: International Telecommunications Union, General Secretariat - Sales Section, Place des Nations, CH-1211 Geneva, Switzerland. http://www.itu.int/itudoc/itu-r/rec/tf/

Aging Mechanisms

- **Mass transfer due to contamination**
  Since $f \propto 1/t$, $\Delta f/f = -\Delta t/t$; e.g., $f_{5MHz} \approx 10^6$ molecular layers, therefore, 1 quartz-equivalent monolayer $\Rightarrow \Delta f/f \approx 1$ ppm

- **Stress relief** in the resonator's: mounting and bonding structure, electrodes, and in the quartz (?)

- **Other effects**
  - Quartz outgassing
  - Diffusion effects
  - Chemical reaction effects
  - Pressure changes in resonator enclosure (leaks and outgassing)
  - Oscillator circuit aging (load reactance and drive level changes)
  - Electric field changes (doubly rotated crystals only)
  - Oven-control circuitry aging

4-6

The main causes of aging appear to be mass transfer to or from the resonator surfaces (due to adsorption and desorption of contamination) and stress relief within the mounting structure or at the interface between the quartz and the electrodes. Many aging measurements have been reported, but few have included a detailed scientific or statistical study of the aging processes. Our understanding of resonator aging processes is often based on indirect evidence.

Because the frequency of a thickness shear resonator, such as an AT-cut or SC-cut, is inversely proportional to the thickness of the crystal plate, and because, for example, a 5-MHz 3rd overtone plate is on the order of 1 million atomic layers thick, the adsorption or desorption of contamination equivalent to the mass of one atomic layer of quartz changes the frequency by about 1 ppm. In general, if contamination equal in mass to 1½ monolayers of quartz is adsorbed or desorbed from the surfaces, the resulting frequency change in parts per million is equal to the resonator's fundamental mode frequency in megahertz. Therefore, in order to achieve low-aging, crystal units must be fabricated and hermetically sealed in ultraclean, ultrahigh vacuum environments, and hermetically sealed into packages that are capable of maintaining the clean environment for long periods.

Stress (and stress relief) effects are discussed on the pages that follow (see, e.g., "Mounting Force Induced Frequency Change").

T. R. Meeker, and J. R. Vig, "The Aging of Bulk Acoustic Wave Resonators, Oscillators and Filters," Proc. 45th Ann. Symp. on Frequency Control 1991, IEEE Cat. No. 91CH2965-2. This paper is also available at <http://www.ieee.org/uffc/fc> .

Typical Aging Behaviors

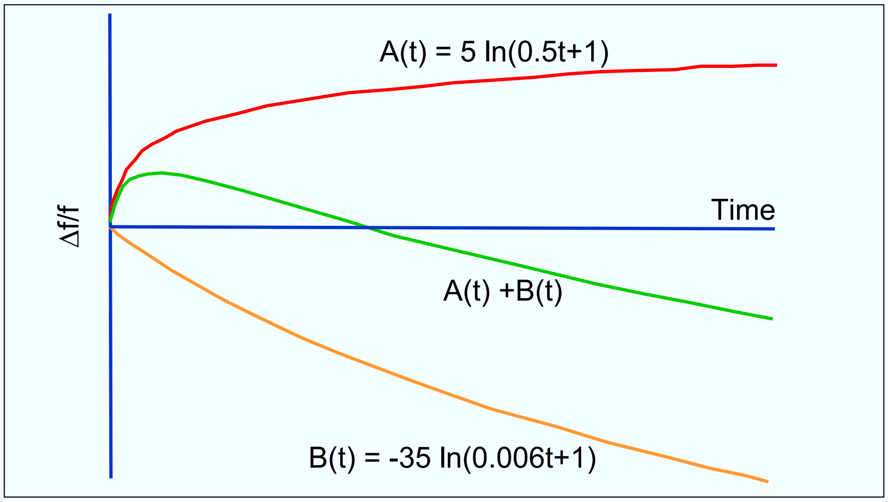

4-7

Aging can be positive or negative. Occasionally, a reversal in aging direction is observed. Typical (computer simulated) aging behaviors are illustrated above. The curve showing the reversal is the sum of the other two curves. The simplest proposed aging model showing a reversal consists of two simultaneously acting aging mechanisms, with different directions and decay times. In the example above, initially, A(t) dominates. It decays faster than B(t), therefore, eventually, the aging mechanism described by B(t) dominates the aging.

The aging rate of an oscillator is highest when it is first turned on. Since the aging rate during the first few days to weeks is generally significantly higher than during subsequent intervals, the early part of the aging curve is sometimes referred to as "initial aging" or "stabilization period." At a constant temperature, aging usually has an approximately logarithmic dependence on time. After a long period, the aging rate often becomes approximately constant (i.e., linear frequency vs. time). When the temperature of a crystal unit is changed, e.g., when an OCXO is turned off, and turned on at a later time, a new aging cycle usually starts (see “Retrace”).

T. R. Meeker, and J. R. Vig, "The Aging of Bulk Acoustic Wave Resonators, Oscillators and Filters," Proc. 45th Ann. Symp. on Frequency Control 1991, IEEE Cat. No. 91CH2965-2.

Stresses on a Quartz Resonator Plate

Causes:

- Thermal expansion coefficient differences
- Bonding materials changing dimensions upon solidifying/curing
- Residual stresses due to clip forming and welding operations, sealing
- Intrinsic stresses in electrodes
- Nonuniform growth, impurities & other defects during quartz growing
- Surface damage due to cutting, lapping and (mechanical) polishing

Effects:

- In-plane diametric forces
- Tangential (torsional) forces, especially in 3 and 4-point mounts
- Bending (flexural) forces, e.g., due to clip misalignment and electrode stresses
- Localized stresses in the quartz lattice due to dislocations, inclusions, other impurities, and surface damage

4-8

There are a variety of stresses built, inadvertently, into a newly manufactured resonator. The resonator experiences additional stresses due to changes in its environment, as is discussed later in chapter 4.

It is the **changes** in the stresses, and the changes produced by the stresses that cause frequency instabilities. There exists evidence that, on a microscopic level, stress relief is not a continuous process. It can occur in bursts that can, possibly, contribute to noise and frequency jumps.

Thermal Expansion Coefficients of Quartz

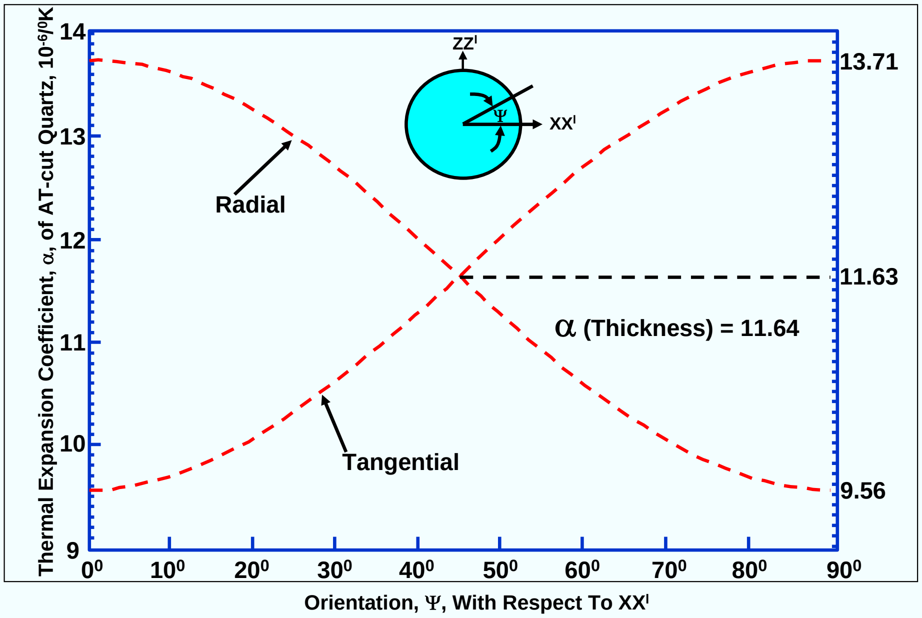

4-9

The thermal expansion coefficient of single crystal quartz varies with direction, as shown above*. This makes it virtually impossible to avoid stresses due to thermal expansion coefficient differences - e.g., at interfaces between the quartz plate and its electrodes and the mounting structure.

Electrodeless designs, such as the "BVA" resonator, and the "all quartz package," attempt to eliminate these stresses by mounting the quartz resonator plate on a single crystal quartz structure of the same orientation. However, it is not the stresses but the **changes** in the stresses that cause instabilities, so, in other designs, compliant, spring-like mounting structures are used to minimize instabilities due to stress relief.

*Provided by Arthur Ballato, U.S. Army CECOM, private communication, circa 1978

R.J. Besson, "A New Electrodeless Resonator Design," Proc. 31st Ann. Symp. On Frequency Control, pp. 147-152, 1977.

T.E. Parker, J. Callerame and G.R. Montress, "A New All Quartz Package For SAW Devices," Proc. 39th Ann. Symp. on Frequency Control, pp. 519-525, 1985.

Force-Frequency Coefficient

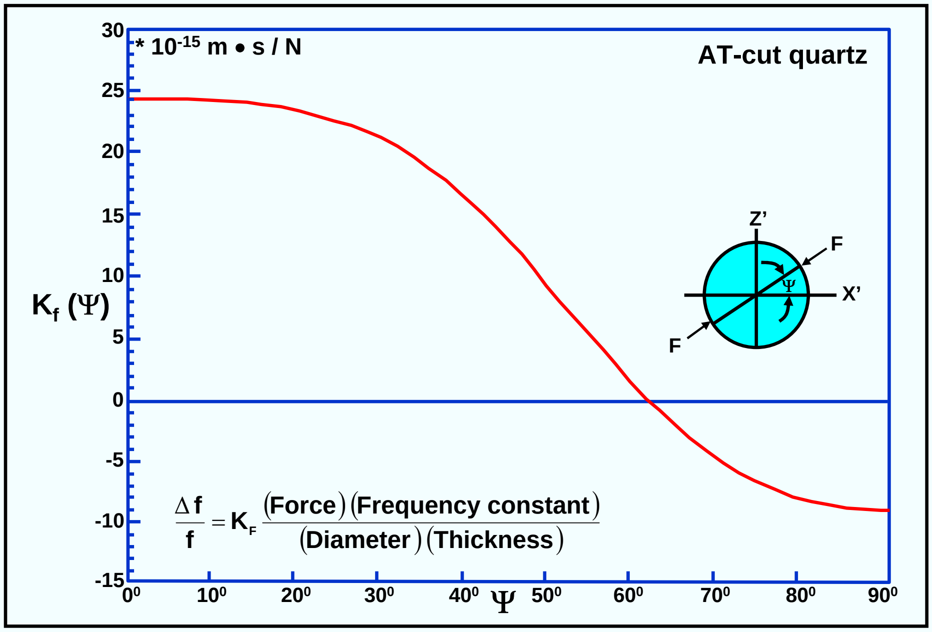

4-10

A force applied to a resonator causes lattice deformation that results in a frequency change. The above curve shows the force-frequency coefficient, K_F, as a function of the direction of the applied force. An AT-cut quartz plate was squeezed, as shown, by a diametrically applied force. The frequency changes were measured as a function of direction of the force with respect to the x'-axis, and K_F was calculated using the expression shown above. The zero crossing is at $\Psi = 61^o$. However, the the force-frequency coefficient, and it's zero crossing, also depend on temperature. For both the AT-cut and the SC-cut, the zero crossing is at a few degrees smaller Ψ angle when, e.g., measured at 80ºC vs. 25ºC.

A. Ballato, E. P. EerNisse, and T. Lukaszek, "The Force--Frequency Effect in Doubly Rotated Quartz Resonators," Proc. 31st Annual Symposium on Frequency Control, pp. 8-16, 1977, AD-A088221.

Strains Due To Mounting Clips

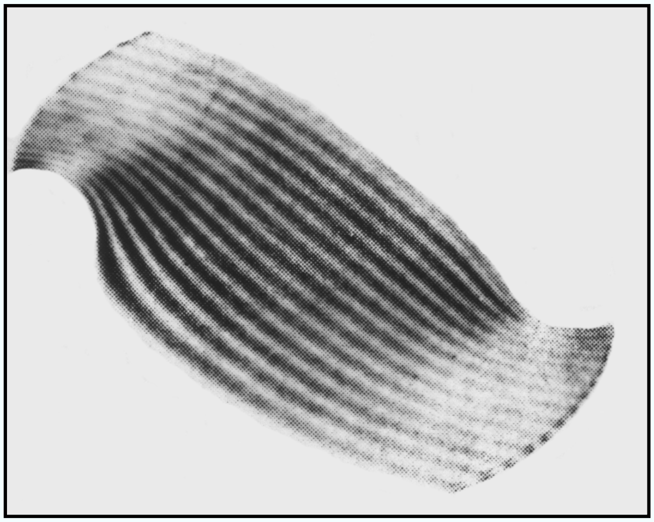

X-ray topograph of an AT-cut, two-point mounted resonator. The topograph shows the lattice deformation due to the stresses caused by the mounting clips.

R. A. Young, R. B. Belser, A. L. Bennett, W. H. Hicklin, J. C. Meaders, and C. E. Wagner, "Special X-ray Studies of Quartz Frequency Control Units," Proc. 19th Annual Symposium on Frequency Control, pp. 23-41, 1965, AD-471229.

Strains Due To Bonding Cements

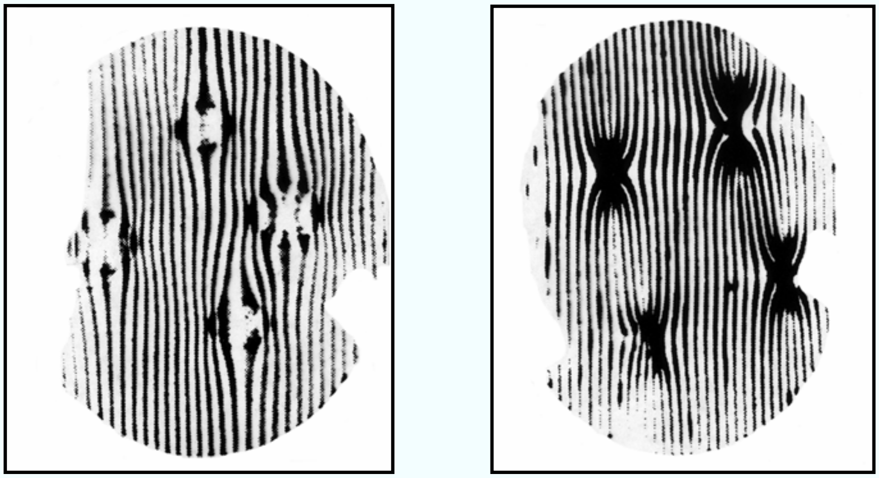

(a) (b)

X-ray topographs showing lattice distortions caused by bonding cements; (a) Bakelite cement - expanded upon curing, (b) DuPont 5504 cement - shrank upon curing

4-12

Bonding agents such as silver-filled epoxies and silver-filled polyimides are commonly used to bond quartz plates to the mounting clips. In addition to producing stresses, such bonding agents also absorb water, and can produce aging due to stress relief, and the outgassing of organic materials and water.

R. B. Belser and W. H. Hicklin, "Aging Characteristics of Quartz Resonators With Comments on the Effects of Radiation," Proc. 17th Annual Symposium on Frequency Control, pp. 127-175, 1963, AD423381.

J. A. Kusters, "Resonator and Device Technology," in E. A. Gerber and A. Ballato, Precision Frequency Control, Vol. 1, pp. 161-183, Academic Press, 1985.

R. L. Filler*. J. M. Frank**. R. D. Peters, and J. R. Vig, “Polyimide Bonded Resonators” Proc. 32nd Ann. Symp. on Frequency Control, pp. 290-298, 1972.

R. J. Byrne, “Thermocompression Bonding To Quartz Crystals,” Proc. 26th Ann. Symp. on Frequency Control, pp. 71-77, 1972.

Mounting Force Induced Frequency Change

The force-frequency coefficient, K_F (ψ), is defined by

$$\frac{\Delta f}{f} = K_F \frac{(\text{Force})(\text{Frequency} - \text{constant})}{(\text{Diameter})(\text{Thickness})}$$

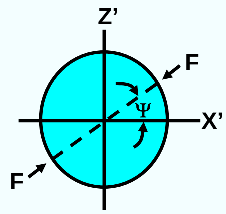

Maximum K_F (AT-cut) = 24.5 x 10^{-15} m-s/N at ψ = 0°

Maximum K_F (SC-cut) = 14.7 x 10^{-15} m-s/N at ψ = 44°

As an example, consider a 5 MHz 3rd overtone, 14 mm diameter resonator. Assuming the presence of diametrical forces only, (1 gram = 9.81 x 10^{-3} newtons),

$$\left(\frac{\Delta f}{f}\right)_{Max} = \begin{cases} 2.9 \times 10^{-8} \text{ per gram for an AT-cut resonator} \\ 1.7 \times 10^{-8} \text{ per gram for an SC-cut resonator} \end{cases}$$

$$\left(\frac{\Delta f}{f}\right)_{Min} = 0 \text{ at } \psi = 61^o \text{ for an AT-cut resonator, and at } \psi = 82^o \text{ for an SC-cut.}$$

4-13

The mounting structure can produce not only in-plane diametric forces but also tangential (torsional) forces, especially in 3 and 4-point mounts, and bending (flexural) forces, e.g., due to clip misalignment and electrode stresses. These stresses produce frequency shifts, and the changes in these stresses result in frequency aging.

A. Ballato, E. P. EerNisse, and T. Lukaszek, "The Force--Frequency Effect in Doubly Rotated Quartz Resonators," Proc. 31st Annual Symposium on Frequency Control, pp. 8-16, 1977, AD-A088221.

E. D. Fletcher and A. J. Douglas, "A Comparison Of The Effects Of Bending Moments On The Vibrations Of AT And SC (or TTC) Cuts Of Quartz," Proc. 33rd Annual Symposium on Frequency Control, pp. 346-350, 1979.

Bonding Strains Induced Frequency Changes

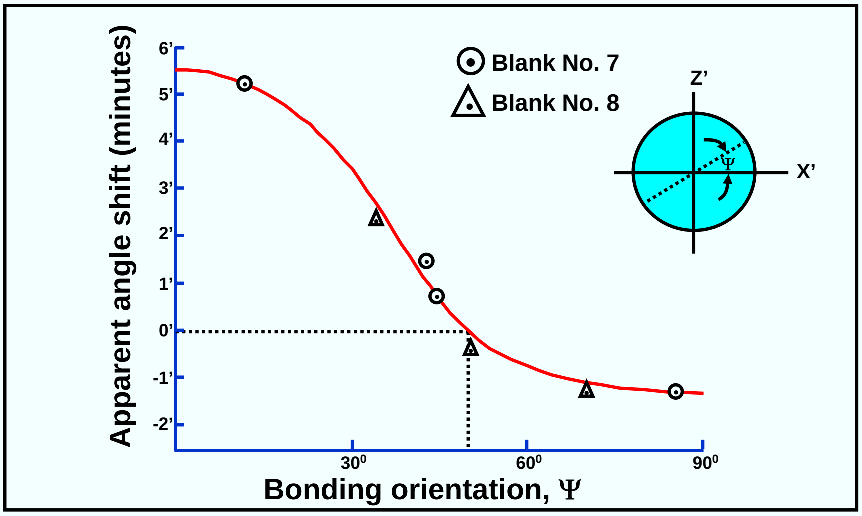

When 22 MHz fundamental mode AT-cut resonators were reprocessed so as to vary the bonding orientations, the frequency vs. temperature characteristics of the resonators changed as if the angles of cut had been changed. The resonator blanks were 6.4 mm in diameter plano-plano, and were bonded to low-stress mounting clips by nickel electrobonding.

The mounting and bonding stresses can affect the f vs. T of resonators. The experimental results shown above demonstrate that the same quartz plate can exhibit a range of f vs. T characteristics depending on the orientation of the bonding stresses. (Thicker plates and more compliant bonding agents produce smaller apparent angle shifts.)

R. L. Filler, and J. R. Vig, "The Effect of Bonding on the Frequency vs. Temperature Characteristics of AT-cut Resonators," Proc. 30th Annual Symposium on Frequency Control, pp. 264-268, 1976, AD-046089.

Bending Force vs. Frequency Change

AT-cut resonator

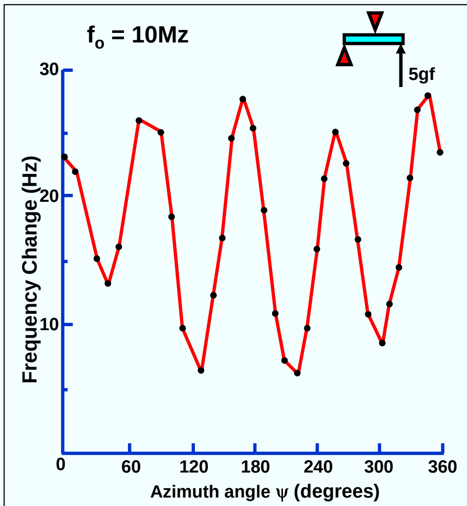

Frequency change for symmetrical bending, AT-cut crystal.

SC-cut resonator

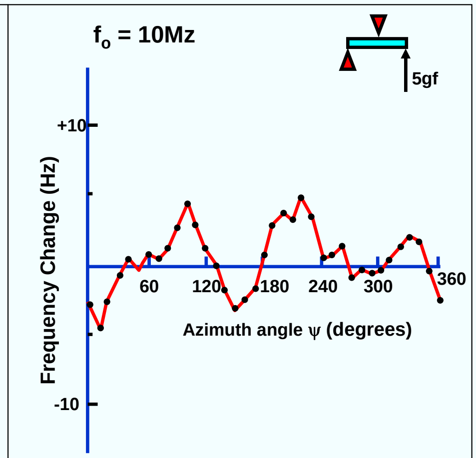

Frequency change for symmetrical bending, SC-cut crystal.

The above shows experimental results of the frequency change vs. the azimuthal angle for symmetrical bending about a diameter. The resonators were 12 mm diameter, AT-cut and SC-cut, plano-plano. A constant force of 5 grams was applied, the measurements were repeated as the resonator was rotated, and the frequency changes were plotted as a function of azimuthal angle Ψ.

At all azimuthal angles, the SC-cut is less sensitive to bending than the AT-cut when the force is applied normal to the plane of the resonator, as it was in these experiments. For the AT-cut, the frequency change vs. angle has no zero crossing. The integral of frequency changes from 0^o to 360^o is much smaller for the SC-cut than for the AT-cut (even though there was a significant measurement uncertainty in the SC-cut results). In addition, when the force was varied from zero to ~15 grams, the frequency change vs. applied force was much more linear for the SC-cut than the AT-cut.

E. D. Fletcher and A. J. Douglas, “A Comparison Of The Effects Of Bending Moments On The Vibrations Of AT And SC (or TTC) Cuts Of Quartz,” Proc. 33rd Annual Symposium on Frequency Control, pp. 346-350, 1979.

Short Term Instability (Noise)

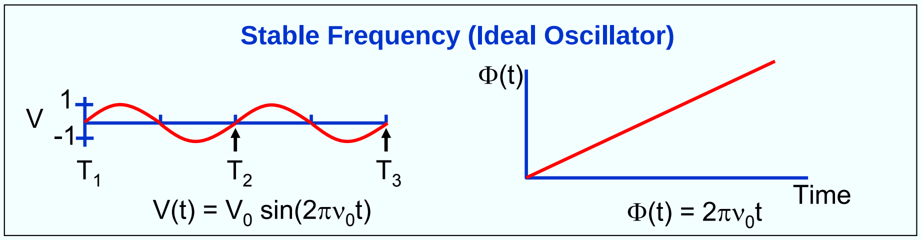

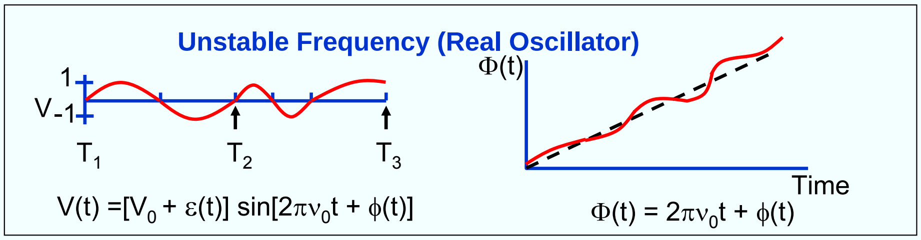

Instantaneous frequency, $\nu(t) = \frac{1}{2\pi}\frac{d\Phi(t)}{dt} = \nu_0 + \frac{1}{2\pi}\frac{d\phi(t)}{dt}$

$V(t)$ = Oscillator output voltage, V_0 = Nominal peak voltage amplitude
$\varepsilon(t)$ = Amplitude noise, ν_0 = Nominal (or "carrier") frequency
$\Phi(t)$ = Instantaneous phase, and $\phi(t)$ = Deviation of phase from nominal (i.e., the ideal)

The output voltage of an ideal oscillator would be a perfect sine wave. The outputs of all real oscillators deviate from a perfect sine wave due to noise. The amplitude deviation is represented by $\varepsilon(t)$, and the phase deviation by $\phi(t)$. As frequency is the rate of change of phase, the frequency deviation is $\nu(t) - \nu_0 = [1/(2\pi)][d\phi(t)/dt]$.

See the next page for another illustration of the amplitude, phase and frequency instabilities.

S. R. Stein, "Frequency and Time - Their Measurement and Characterization," in E. A. Gerber and A. Ballato, Precision Frequency Control, Vol. 2, pp. 191-232, Academic Press, 1985.

Instantaneous Output Voltage of an Oscillator

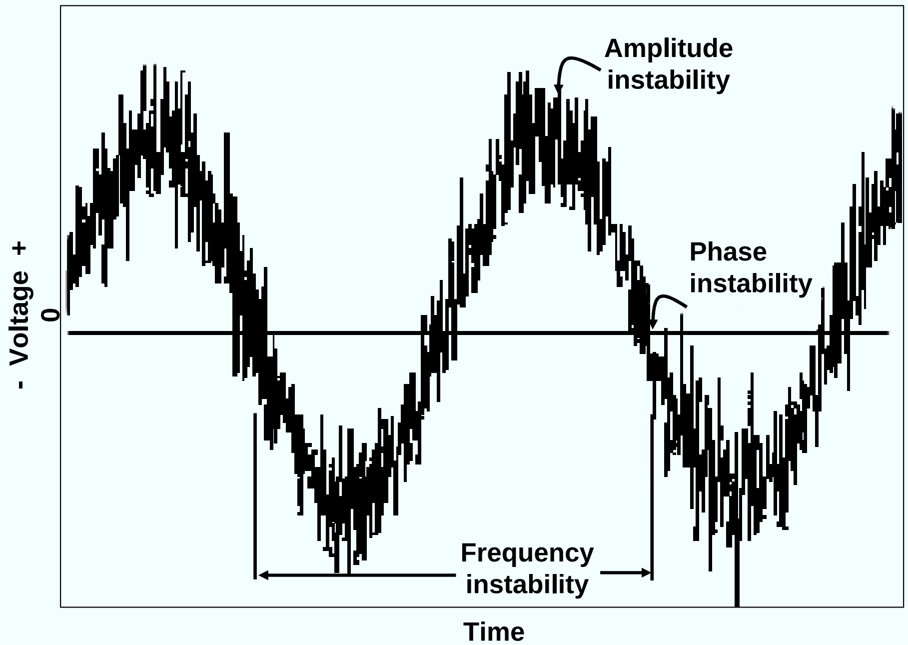

4-17

As shown on the previous page, the instantaneous output voltage of a precision oscillator can be expressed as

$$V(t) = (V_o + \varepsilon(t)) \sin(2\pi\nu_o t + \phi(t)),$$

where V_o is the nominal peak voltage amplitude, $\varepsilon(t)$ is the deviation from the nominal amplitude, ν_o is the nominal frequency, and $\phi(t)$ is the phase deviation from the nominal phase $2\pi\nu_o t$. The figure illustrates a signal with amplitude, phase and frequency instabilities. Fluctuations in the peak value of the signal is the amplitude instability. Fluctuations in the zero crossings of the voltage is the phase instability. Frequency instability is the fluctuations in the period of the voltage.

In the signal shown, the frequency components of the noise are higher than the carrier frequency. This is for illustration purposes only. In general, the measures of stability apply to the frequency components of amplitude, phase and frequency instabilities which are lower in frequency than the carrier frequency.

The above figure was provided by Prof. Eva Ferre-Pikal, Univ. of Wyoming, 1999.

IEEE Standard 1139-1999

Impacts of Oscillator Noise

- Limits the ability to determine the current state and the predictability of oscillators
- Limits syntonization and synchronization accuracy
- Limits receivers' useful dynamic range, channel spacing, and selectivity; can limit jamming resistance
- Limits radar performance (especially Doppler radar's)
- Causes timing errors [$\sim\tau\sigma_y(\tau)$]
- Causes bit errors in digital communication systems
- Limits number of communication system users, as noise from transmitters interfere with receivers in nearby channels
- Limits navigation accuracy
- Limits ability to lock to narrow-linewidth resonances
- Can cause loss of lock; can limit acquisition/reacquisition capability in phase-locked-loop systems

Impacts of Oscillator Noise

Time Domain - Frequency Domain

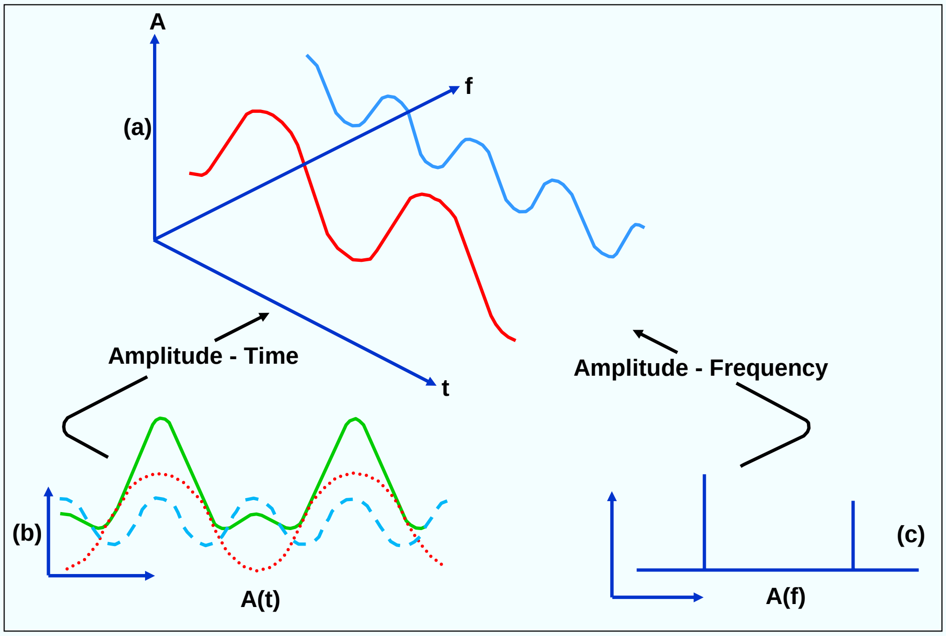

4-18

Shown in (a) is the amplitude vs. frequency vs. time plot of two sine waves. An oscilloscope can display such signals in the time domain, e.g., the voltage output vs. time of the two sine waves, and their sum, is shown in (b) above. A spectrum analyzer can display voltage or power as a function of frequency, i.e., it can be used to analyze signals in the frequency domain, as in (c) above. In the frequency domain, signals are separated into their frequency components and the power level at each frequency is displayed.

An ideal sine wave appears as a spectral line of zero bandwidth in the frequency domain. Real sine wave outputs are always noisy, so the spectral lines have a finite bandwidth.

Noise is usually present over a wide band of frequencies. The total power (or voltage) measured by a spectrum analyzer depends on the resolution bandwidth used. The unit of phase noise is dBc/Hz (dB below the carrier per Hz of bandwidth). Reporting phase noise measurement results must include the bandwidth and the carrier frequency.

“Spectrum Analysis….Spectrum Analyzer Basics,” Hewlett-Packard Aplication Note 150, April, 1974.

“Spectrum Analysis….Noise Measurements,” Hewlett-Packard Aplication Note 150-4, April, 1974.
<http://www.tmo.hp.com/@@gR622hcQNYU06mWM/tmo/Notes/English/NotesSubjects.html>

Causes of Short Term Instabilities

- Johnson noise (thermally induced charge fluctuations, i.e., "thermal emf" in resistive elements)
- Phonon scattering by defects & quantum fluctuations (related to Q)
- Noise due to oscillator circuitry (active and passive components)
- Temperature fluctuations- thermal transient effects
  - activity dips at oven set-point
- Random vibration
- Fluctuations in the number of adsorbed molecules
- Stress relief, fluctuations at interfaces (quartz, electrode, mount, bond)
- Shot noise in atomic frequency standards
- ? ? ?

4-19

The irregular, random dancing motions of tiny solid particles suspended in a liquid were observed in the 18th century, and the phenomenon was later described by Robert Brown. The effect, now called Brownian motion, was explained by Einstein. It was theoretically predicted and experimentally verified by J. B. Johnson (at the output of an audio amplifier) that the Brownian motion of electrons would lead to random voltages at the terminals of a resistor.

Johnson noise, also called thermal noise, is the basic limit in the amplification of weak signals, and it also limits the noise of crystal oscillators, due to the equivalent series resistance of the resonator, and due to the resistances of other components in the sustaining circuit. According to the equipartition law of Maxwell and Boltzmann, under thermal equilibrium, the energy associated with a degree of freedom of a system is $kT/2 = 2 \times 10^{-21}$ J per degree of freedom. It can be shown that a pure resistance R is a white thermal noise source with available power = $kT = 4 \times 10^{-21}$ W/Hz = -204 dBW/Hz = -174 dBm/Hz (dBm is dB referenced to one mW).

J. R. Vig & F. L. Walls, "Fundamental Limits on the Frequency Instabilities of Quartz Crystal Oscillators," Proc. 1994 IEEE Int'l Frequency Control Symposium, pp. 506-523, 1994.

W. R. Bennett, Electrical Noise, McGraw-Hill Book Co., New York, 1960.

P. H. Handel, "Quantum 1/f Quartz Resonator Theory Versus Experiment," Proc. 1999 IEEE Frequency Control Symp.

Y.-K. Yong and J. R. Vig, "Resonator Surface Contamination - A Cause of Frequency Fluctuations?," IEEE Tr. Ultrason. Ferroelec. Freq. Contr., vol. UFFC-36, No. 4, pp. 452-458, July 1989.

R. L. Filler, "The Acceleration Sensitivity of Quartz Crystal Oscillators: A Review," IEEE Tr. Ultrason. Ferroelec. Freq. Contr., vol. UFFC-35, pp. 297-305, 1988.

Short-Term Stability Measures

Measure	Symbol
Two-sample deviation, also called "Allan deviation"	$\sigma_y(\tau)$*
Spectral density of phase deviations	$S_\phi(f)$
Spectral density of fractional frequency deviations	$S_y(f)$
Phase noise	$\mathcal{L}(f)$*

* Most frequently found on oscillator specification sheets

$f^2 S_\phi(f) = \nu^2 S_y(f)$; $\mathcal{L}(f) \equiv \frac{1}{2}[S_\phi(f)]$ (per IEEE Std. 1139),

and

$$\sigma_y^2(\tau) = \frac{2}{(\pi\nu\tau)^2}\int_0^\infty S_\phi(f)\sin^4(\pi f\tau)df$$

Where τ = averaging time, ν = carrier frequency, and f = offset or Fourier frequency, or "frequency from the carrier".

4-20

IEEE Standard 1139 is the standard for characterizing measurements of frequency, phase, and amplitude instabilities. The standard measure for characterizing phase and frequency instabilities in the frequency domain is $\mathcal{L}(f)$, defined as one half of the double-sideband spectral density of phase fluctuations. When expressed in decibels, the units of $\mathcal{L}(f)$ are dBc/Hz (dB below the carrier in a 1 Hz bandwidth). A device is to be characterized by a plot of $\mathcal{L}(f)$ versus offset frequency f. In some applications, providing $\mathcal{L}(f)$ versus discrete values of offset frequency is sufficient.

The standard measure for characterizing amplitude instability in the frequency domain is one half of the double-sideband spectral density of the fractional amplitude fluctuations, 1/2 $S_a(f)$. When expressed in decibels, the units of $S_a(f)$ are dBc/Hz.

In the time domain, the standard measure of frequency and phase instabilities is the fully overlapped Allan deviation $\sigma_y(\tau)$ - see the next few pages. A device shall be characterized by a plot of $\sigma_y(\tau)$ versus sampling time τ. In some cases, providing discrete values of $\sigma_y(\tau)$ versus τ is sufficient. The measurement system bandwidth and the total measurement time shall be indicated.

IEEE Standard 1139-1999

Characterization of Clocks and Oscillators, edited by D. B. Sullivan, et al., NIST Technical Note 1337, March 1990. Time & Frequency Div., NIST, 325 Broadway, Boulder, CO 80303.

S. R. Stein, "Frequency and Time - Their Measurement and Characterization," in E. A. Gerber and A. Ballato, Precision Frequency Control, Vol. 2, pp. 191-232, Academic Press, 1985

Allan Deviation

Also called **two-sample deviation,** or square-root of the "**Allan variance,**" it is the standard method of describing the short term stability of oscillators in the time domain. It is denoted by $\sigma_y(\tau)$,

where $$\sigma_y^2(\tau) = \frac{1}{2} < (y_{k+1} - y_k)^2 > .$$

The fractional frequencies, $y = \frac{\Delta f}{f}$ are measured over a time interval, τ; $(y_{k+1} - y_k)$ are the differences between pairs of successive measurements of y, and, ideally, < > denotes a time average of an infinite number of $(y_{k+1} - y_k)^2$. A good estimate can be obtained by a limited number, m, of measurements ($m \geq 100$). $\sigma_y(\tau)$ generally denotes $\sqrt{\sigma_y^2(\tau, m)}$, i.e.,

$$\sigma_y^2(\tau) = \sigma_y^2(\tau, m) = \frac{1}{m}\sum_{j=1}^{m}\frac{1}{2}\left(y_{k+1} - y_k\right)_j^2$$

4-21

At long averaging times, especially when the averaging time is a substantial fraction of the record length, "TOTALDEV" statistics yield better results than the two-sample deviation (see the Howe reference below).

D. W. Allan, "Time and Frequency (Time-Domain) Characterization, Estimation, and Prediction of Precision Clocks and Oscillators," IEEE Transactions on Ultrasonics, Ferroelectrics, and Frequency Control, Vol. UFFC-34, No. 6, pp. 647-654, November 1987.

"Characterization of Clocks and Oscillators," edited by D.B. Sullivan, D.W. Allan, D.A. Howe, F.L. Walls, NIST Technical Note 1337, March 1990.

D. A. Howe, "Total Variance Explained," Proc. 1999 IEEE Int'l Frequency Control Symp., Joint Meeting EFTF-IEEE IFCS, pp. 1093-1099.

Why $\sigma_y(\tau)$?

- **Classical variance:** $\sigma^2_{y_i} = \frac{1}{m-1}\sum\left(y_i - \bar{y}\right)^2,$

  diverges for some commonly observed noise processes, such as random walk, i.e., the variance increases with increasing number of data points.

- **Allan variance:**
  - Converges for all noise processes observed in precision oscillators.
  - Has straightforward relationship to power law spectral density types.
  - Is easy to compute.
  - Is faster and more accurate in estimating noise processes than the Fast Fourier Transform.

-

Frequency Noise and $\sigma_y(\tau)$

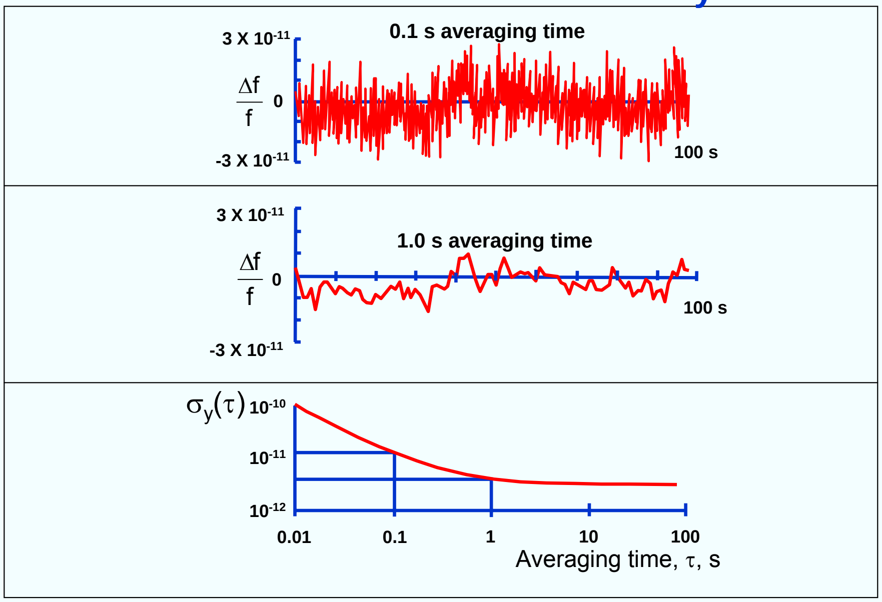

“The noise” is a function of the averaging time (also called “measurement time” or “tau”), as is illustrated above. For the same oscillator, the fluctuations in the frequency vs. time plot measured with a 0.1 second averaging time are larger than when measured with a 1 second averaging time. Also shown are the corresponding Allan deviations.

At short averaging times, the longer the averaging time, the lower the noise, up to the “flicker floor,” i.e., for certain noise processes (see the next four pages), the hills and valleys in the frequency vs. time data average out. Longer averaging does not help when the dominant noise process is flicker of frequency. At the flicker floor, the Allan deviation is independent of averaging time. At longer averaging times, the Allan deviation increases because the dominant noise process is random walk of frequency, for which the longer the averaging time, the larger the Allan deviation.

Time Domain Stability

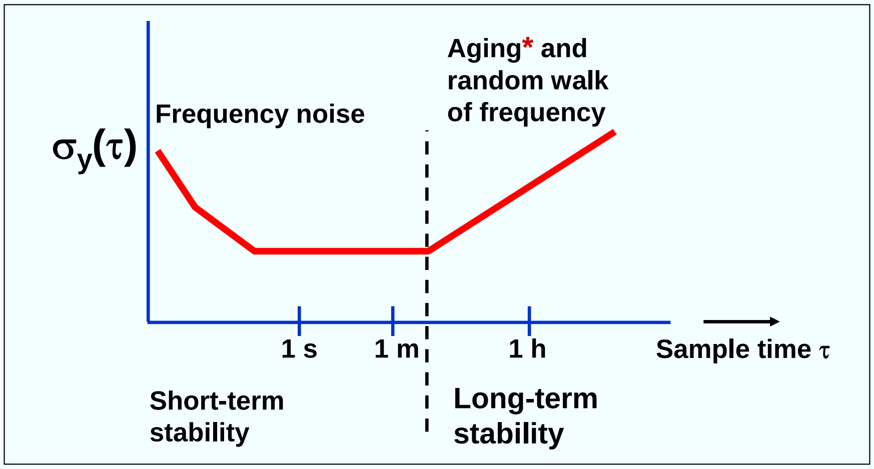

*For $\sigma_y(\tau)$ to be a proper measure of random frequency fluctuations, aging must be properly subtracted from the data at long τ's.

"Characterization of Clocks and Oscillators," edited by D.B. Sullivan, D.W. Allan, D.A. Howe, F.L. Walls, NIST Technical Note 1337, March 1990.

Power Law Dependence of $\sigma_y(\tau)$

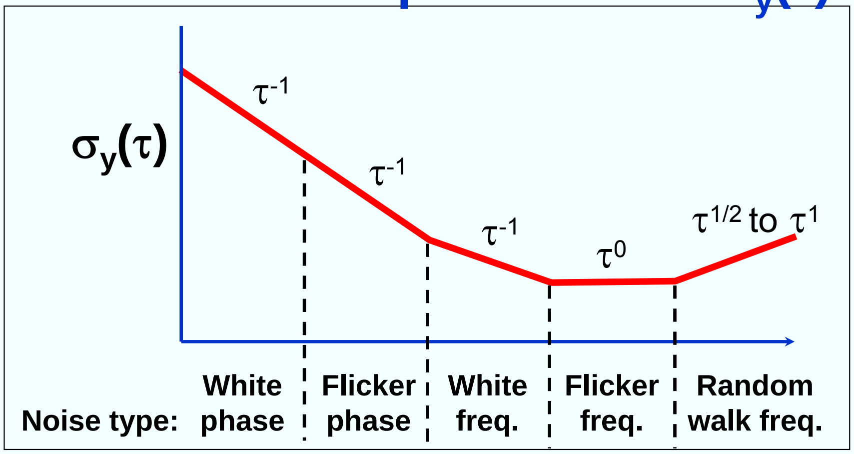

Below the flicker of frequency noise (i.e., the "flicker floor") region, crystal oscillators typically show τ^{-1} (white phase noise) dependence. Atomic standards show $\tau^{-1/2}$ (white frequency noise) dependence down to about the servo-loop time constant, and τ^{-1} dependence at less than that time constant. Typical τ's at the start of flicker floors are: 1s for a crystal oscillator, 10^3s for a Rb standard and 10^5s for a Cs standard. At large τ's, random walk of frequency and aging dominate.

4-25

"Characterization of Clocks and Oscillators," edited by D.B. Sullivan, D.W. Allan, D.A. Howe, F.L. Walls, NIST Technical Note 1337, March 1990.

Pictures of Noise

Plot of z(t) vs. t	$S_z(f) = h_\alpha f^\alpha$	Noise name
	$\alpha = 0$	White
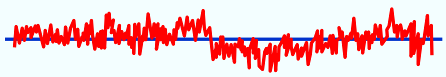	$\alpha = -1$	Flicker
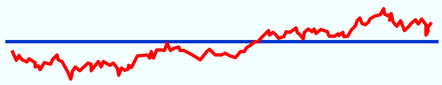	$\alpha = -2$	Random walk
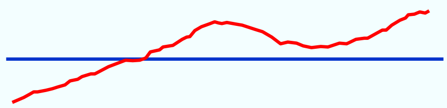	$\alpha = -3$	

Plots show fluctuations of a quantity z(t), which can be,e.g., the output of a counter (Δf vs. t) or of a phase detector (ϕ[t] vs. t). The plots show simulated time-domain behaviors corresponding to the most common (power-law) spectral densities; h_α is an amplitude coefficient. Note: since $S_{\Delta f} = f^2 S_\phi$, e.g. white frequency noise and random walk of phase are equivalent.

David W. Allan, “The Measurement of Frequency and Frequency Stability of Precision Oscillators,” David W. Allan, NBS Technical Note 669, May 1975.

R. F. Voss, "1/f (Flicker) Noise: A Brief Review," Proc. 33rd Annual Symposium on Frequency Control, pp. 40-46, 1979, AD-A213544.

Spectral Densities

$$V(t) = [V_0 + \varepsilon(t)]\sin[2\pi\nu_0 t + \phi(t)]$$

In the frequency domain, due to the phase deviation, $\phi(t)$, some of the power is at frequencies other than ν_0. The stabilities are characterized by "spectral densities." The spectral density, $S_V(f)$, the mean-square voltage $<V^2(t)>$ in a unit bandwidth centered at f, is not a good measure of frequency stability because both $\varepsilon(t)$ and $\phi(t)$ contribute to it, and because it is not uniquely related to frequency fluctuations (although $\varepsilon(t)$ is often negligible in precision frequency sources.)

The spectral densities of phase and fractional-frequency fluctuations, $S_\phi(f)$ and $S_y(f)$, respectively, are used to measure the stabilities in the frequency domain. The spectral density $S_g(f)$ of a quantity g(t) is the mean square value of g(t) in a unit bandwidth centered at f. Moreover, the RMS value of g^2 in bandwidth BW is given by $g^2_{RMS}(t) = \int_{BW} S_g(f)df$.

4-27

The Fourier frequency is a fictitious frequency used in Fourier analysis of a signal. Zero Fourier frequency corresponds to the carrier, and a negative Fourier frequency refers to the region below the carrier. The integral of the spectral density over all Fourier frequencies from minus infinity to infinity is the mean-square value of the quantity. The spectral density of phase-noise $S_\phi(f)$ is important because it is directly related to the performance of oscillators in RF signal processing applications. Up until 1988, the single-sideband (SSB) noise power per Hz to total signal power ratio was often specified for oscillators instead of the phase spectral density. This ratio has been designated $\mathcal{L}(f)$. In IEEE standard 1139-1988 (current version is 1139-1999), the definition of $\mathcal{L}(f)$ was changed to one-half $S_\phi(f)$. When defined this way, $\mathcal{L}(f)$ is equal to the SSB noise-to-signal ratio only as long as the integrated phase-noise from f to infinity is small compared to one rad^2.

The phase spectral density (phase noise) depends on carrier frequency. When the signal from an oscillator is multiplied by n in a noiseless multiplier, the frequency modulation (FM) sidebands increase in power by n^2, as does the spectral density of phase. Consequently, it is important to state the oscillator frequency together with the phase noise.

Mixer Functions

$$V_1 = A_1 \sin(\omega_1 t + \varphi_1)$$

$$V_2 = A_2 \sin(\omega_2 t + \varphi_2)$$

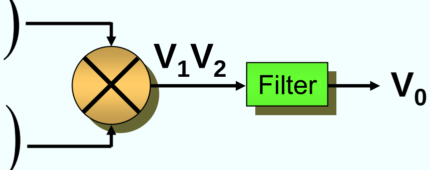

Trigonometric identities: sin(x)sin(y) = ½cos(x-y) - ½cos(x+y)

cos(x±π/2) = sin(x)

Let $\omega_1 = \omega_2; \Phi_1 \equiv \omega_1 t + \varphi_1$, and $\Phi_2 \equiv \omega_2 t + \varphi_2$. Then the mixer can become :

- **Phase detector:** When $\Phi_1 = \Phi_2 + \pi/2$ and $A_1 = A_2 = 1$, then

  $$V_0 = \frac{1}{2}\sin(\varphi_1 - \varphi_2) = \frac{1}{2}(\varphi_1 - \varphi_2) \text{ for small } \varphi\text{'s}$$

- **AM detector:** When $A_2 = 1$ and the filter is a low – pass filter, then

  $$V_0 = \frac{1}{2}A_1\cos(\varphi_1 - \varphi_2); \text{ if } \varphi_1 \approx \varphi_2, \text{ then } V_0 \approx \frac{1}{2}A_1$$

- **Frequency multiplier:** When $V_1 = V_2$ and the filter is bandpass at $2\omega_1$

  then, $V_0 = \frac{1}{2}A_1^2\cos(2\omega_1 t + 2\varphi_1) \Rightarrow$ doubles the frequency and phase error.

4-28

A mixer is a versatile device in frequency metrology. As shown above, the input to the mixer are two voltages, and the output is the product of those voltages. Through the application of elementary trigonometry, a mixer can be made into a phase detector, an amplitude detector, and a frequency multiplier.

P. Kartaschoff, Frequency and Time, section 3.4 "Frequency Multiplication and Division," Academic Press, 1978.

Phase Detector

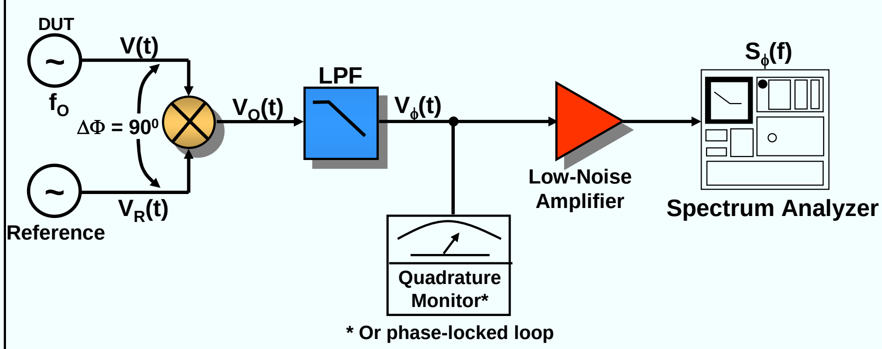

4-29

The device under test (DUT) and a reference source, at the same frequency and in phase quadrature (i.e., 90^0 out of phase), are input to a double-balanced mixer. Then,

$$V_0(t) = V(t)\,V_R(t) = K\cos[\phi(t) - \phi_R(t) + \pi/2] + K\cos[2\pi(\nu + \nu_R)t + \ldots].$$

The low-pass filter (LPF) eliminates the second cosine term. Then,

$$\text{for } \phi_R(t) << \phi(t) << \pi/2,$$

$$V_\phi(t) = K\phi(t),$$

i.e., the phase detector converts phase fluctuations to voltage fluctuations.

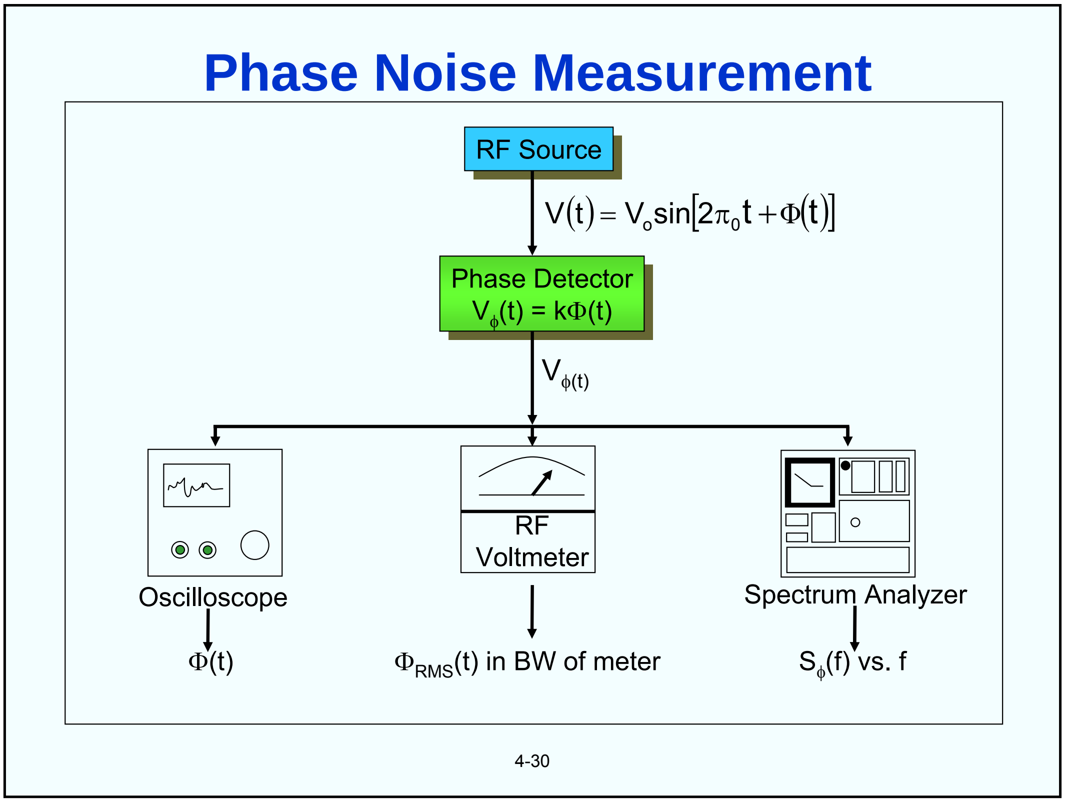

An oscilloscope can display the phase vs. time of a signal. An RF voltmeter can measure the RMS phase fluctuations within the bandwidth of the instrument. A spectrum analyzer can display the phase noise as a function of offset frequency from the carrier frequency.

"Characterization of Clocks and Oscillators," edited by D.B. Sullivan, D.W. Allan, D.A. Howe, F.L. Walls, NIST Technical Note 1337, March 1990.

W. P. Robins, Phase Noise in Signal Sources (Theory and Applications), IEE Tele-communications Series 9, 1982.

Frequency - Phase - Time Relationships

$$\nu(t) = \nu_0 + \frac{1}{2\pi}\frac{d\phi(t)}{dt} = \text{"instantaneous" frequency;} \quad \phi(t) = \phi_0 + \int_0^t 2\pi[\nu(t') - \nu_0]dt'$$

$$y(t) \equiv \frac{\nu(t) - \nu_0}{\nu_0} = \frac{\dot{\phi}(t)}{2\pi\nu_0} = \text{normalized frequency;} \quad \phi^2_{RMS} = \int S_\phi(f)df$$

$$S_\phi(f) = \frac{\phi^2_{RMS}}{BW} = \left(\frac{\nu_0}{f}\right)^2 S_y(f); \qquad \mathcal{L}(f) \equiv 1/2\, S_\phi(f), \text{ per IEEE Standard 1139} - 1988$$

$$\sigma^2_y(\tau) = 1/2 < \left(\bar{y}_{k+1} - \bar{y}_k\right)^2 > = \frac{2}{(\pi\nu_0\tau)^2}\int_0^\infty S_\phi(f)\sin^4(\pi f\tau)\,df$$

The five common power-law noise processes in precision oscillators are:

$$S_y(f) = \underset{\text{(White PM)}}{h_2 f^2} + \underset{\text{(Flicker PM)}}{h_1 f} + \underset{\text{(White FM)}}{h_0} + \underset{\text{(Flicker FM)}}{h_{-1} f^{-1}} + \underset{\text{(Random-walk FM)}}{h_{-2} f^{-2}}$$

$$\text{Time deviation} = x(t) = \int_o^t y(t')dt' = \frac{\phi(t)}{2\pi\nu}$$

4-31

S. R. Stein, "Frequency and Time - Their Measurement and Characterization," in E. A. Gerber and A. Ballato, Precision Frequency Control, Vol. 2, pp. 191-232, Academic Press, 1985.

$S_\phi(f)$ to SSB Power Ratio Relationship

Consider the "simple" case of sinusoidal phase modulation at frequency f_m. Then, $\phi(t) = \phi_o(t)\sin(2\pi f_m t)$, and $V(t) = V_o\cos[2\pi f_c t + \phi(t)] = V_o\cos[2\pi f_c t + \phi_0(t)\sin(\pi f_m t)]$, where $\phi_o(t)$= peak phase excursion, and f_c=carrier frequency. Cosine of a sine function suggests a Bessel function expansion of V(t) into its components at various frequencies via the identities:

$$\cos(X+Y) = \cos X \cos Y - \sin X \sin Y$$

$$\cos X \cos Y = 1/2[\cos(X+Y) + \cos(X-Y)]$$

$$-\sin X \sin Y = [\cos(X+Y) - \cos(X-Y)]$$

$$\cos(B\sin X) = J_0(B) + 2\sum J_{2n}(B)\cos(2nX)$$

$$\sin(B\sin X) = 2\sum_{n=0}^{\infty} J_{2n+1}(B)\sin[(2n+1)X]$$

After some messy algebra, $S_V(f)$ and $S_\phi(f)$ are as shown on the next page. Then,

$$\text{SSB Power Ratio at } f_m = \frac{V_0^2 J_1^2[\Phi(f_m)]}{V_0^2 J_0^2[\Phi(f_m)] + 2\sum_{i=1}^{\infty} J_i^2[\Phi(f_m)]}$$

if $\Phi(f_m) << 1$, then $J_0 = 1$, $J_1 = 1/2\Phi(f_m)$, $J_n = 0$ for $n > 1$, and

$$\text{SSB Power Ratio} = \mathcal{L}(f_m) = \frac{\Phi^2(f_m)}{4} = \frac{S_\phi(f_m)}{2}$$

According to IEEE Standard 1139-1999, the phase noise, $\mathcal{L}(f)$, is defined as

$$\mathcal{L}(f) \equiv \tfrac{1}{2}S_\phi(f)$$

which is equal to the SSB power ratio only when $<\phi^2(t)>$ = the integral of $S_\phi(f)$ from $f = 0$ to $f = \infty$, is less than about 0.1 rad^2. $S_\phi(f)$ can always be measured unambiguously, whereas the SSB power ratio (the pre-1988 definition of phase noise) diverges close to the carrier.

The above analysis and the graph on the next page were provided by Raymond L. Filler, U.S. Army LABCOM, 1989.

$S_\phi(f)$, $S_v(f)$ and $\mathcal{L}(f)$

$$\Phi(t)=\Phi(f_m)\cos(2\pi f_m t)$$

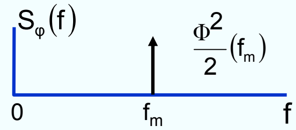

$$V(t)=V_0\cos[2\pi f_C t+\Phi(f_m)]$$

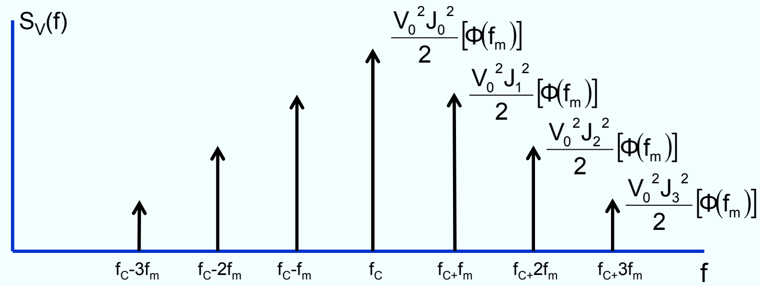

$$\text{SSB Power Ratio}=\frac{V_0^2J_1^2[\Phi(f_m)]}{V_0^2J_0^2[\Phi(f_m)]+2\sum_{i=1}^{\infty}J_i^2[\Phi(f_m)]}\cong\mathcal{L}(f_m)\equiv\frac{S\varphi(f_m)}{2}$$

-

"QUARTZ CRYSTAL RESONATORS AND OSCILLATORS
For Frequency Control and Timing Applications - A TUTORIAL"
Rev. 8.5.1.2, by John R. Vig, July 2001, AD-M001251.

Types of Phase Noise

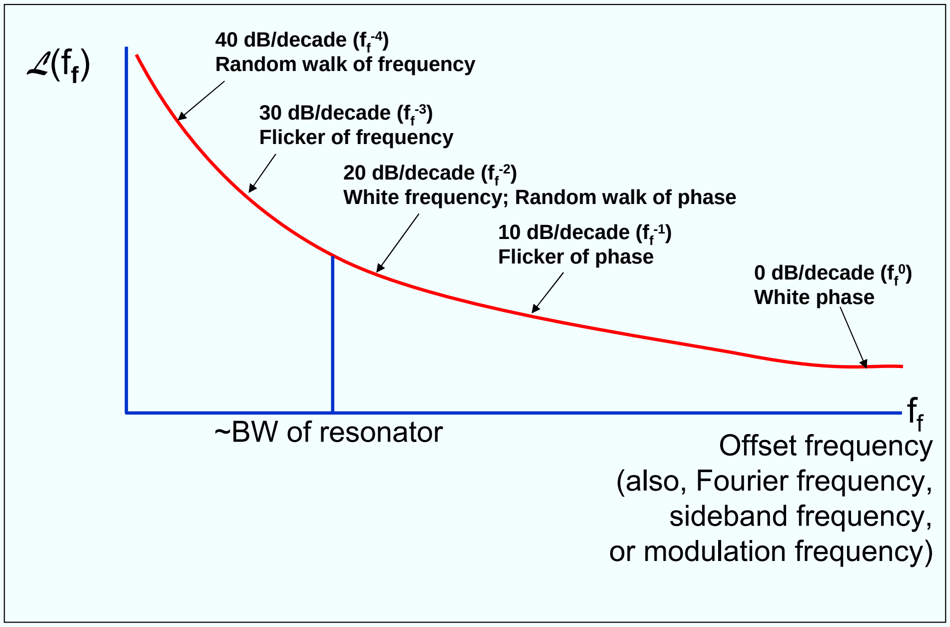

4-34

Phase noise is important in many applications, but, the offset frequencies where the noise is important differs from application to application. For example, in many communication systems, the noise far from the carrier is important (e.g., to minimize the interference between a strong transmitted signal and a weak signal received on a neighboring channel), whereas in Doppler radar systems designed for detection of slowly moving targets, noise close to the carrier is important (see in Chapter 1, "Effect of Noise in Doppler Radar System," and "Doppler Shifts").

"Characterization of Clocks and Oscillators," edited by D.B. Sullivan, D.W. Allan, D.A. Howe, F.L. Walls, NIST Technical Note 1337, March 1990.

Noise in Crystal Oscillators

- The resonator is the primary noise source close to the carrier; the oscillator sustaining circuitry is the primary source far from the carrier.
- Frequency multiplication by N increases the phase noise by N^2 (i.e., by 20log N, in dB's).
- Vibration-induced "noise" dominates all other sources of noise in many applications (see acceleration effects section, later).
- Close to the carrier (within BW of resonator), $S_y(f)$ varies as 1/f, $S_\phi(f)$ as $1/f^3$, where f = offset from carrier frequency, ν. $S_\phi(f)$ also varies as $1/Q^4$, where Q = unloaded Q. Since $Q_{max}\nu$ = const., $S_\phi(f) \propto \nu^4$. $(Q_{max}\nu)_{BAW} = 1.6 \times 10^{13}$ Hz; $(Q_{max}\nu)_{SAW} = 1.05 \times 10^{13}$ Hz.
- In the time domain, noise floor is $\sigma_y(\tau) \geq (2.0 \times 10^{-7})Q^{-1} \approx 1.2 \times 10^{-20}\nu$, ν in Hz. In the regions where $\sigma_y(\tau)$ varies as τ^{-1} and $\tau^{-1/2}$ ($\tau^{-1/2}$ occurs in atomic frequency standards), $\sigma_y(\tau) \propto (QS_R)^{-1}$, where S_R is the signal-to-noise ratio; i.e., the higher the Q and the signal-to-noise ratio, the better the short term stability (and the phase noise far from the carrier, in the frequency domain).
- It is the loaded Q of the resonator that affects the noise when the oscillator sustaining circuitry is a significant noise source.
- Noise floor is limited by Johnson noise; noise power, kT = -174 dBm/Hz at 290°K.
- Higher signal level improves the noise floor but not the close-in noise. (In fact, high drive levels generally degrade the close-in noise, for reasons that are not fully understood.)
- Low noise SAW vs. low noise BAW multiplied up: BAW is lower noise at f < ~1 kHz, SAW is lower noise at f > ~1 kHz; can phase lock the two to get the best of both.

BAW = bulk-acoustic wave resonator (e.g., an AT-cut or SC-cut)
SAW = surface acoustic wave oscillator (e.g., an ST-cut)

-

Low-Noise SAW and BAW Multiplied to 10 GHz (in a nonvibrating environment)

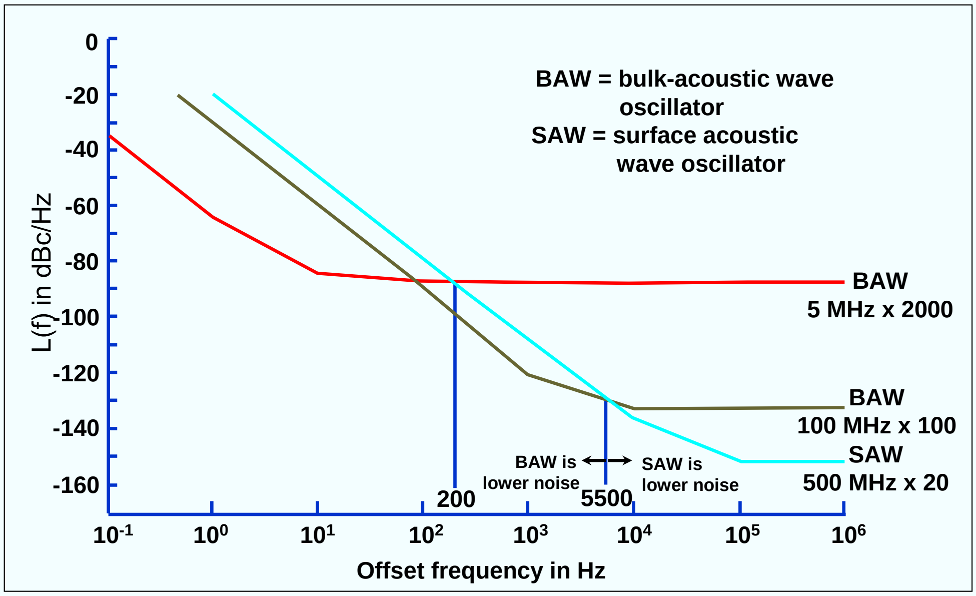

4-36

When low noise is required in the microwave (or higher) frequency range, SAW oscillators and dielectric resonator oscillators (DROs) are sometimes used. When compared with multiplied-up (bulk-acoustic-wave) quartz oscillators, these oscillators can provide lower noise far from the carrier at the expense of poorer noise close to the carrier, poorer aging, and poorer temperature stability. SAW oscillators and DROs can provide lower noise far from the carrier because these devices can be operated at higher drive levels, thereby providing higher signal-to-noise ratios, and because the devices operate at higher frequencies, thereby minimizing the "20 log N" losses due to frequency multiplication by *N*. L(f) = -185 dBc/Hz noise floor (at 400 kHz from the carrier) has been achieved with a 400 MHz SAW oscillator. Of course, as is the case for high-frequency bulk-wave oscillators, such noise floors are realizable only in environments that are free of vibrations at the offset frequencies of interest.

Shown above are the phase noises (with no vibration) of three low-noise oscillators multiplied to 10 GHz: a 5 MHz bulk-acoustic-wave (BAW) oscillator, a 100 MHz BAW oscillator and a 500 MHz SAW oscillator. The SAW oscillator is better at far from the carrier; the BAW oscillators are better close to the carrier.

As shown on the next page, in the presence of vibration, it is the vibration induced phase noise that dominates the phase noise (except very far from the carrier). The device that has the lower acceleration sensitivity will have the lower phase noise, independent of the effects of frequency multiplication.

G.K. Montress & T.E. Parker,"Design and Performance of an Extremely Low Noise Surface Acoustic Wave Oscillator", Proc. 1994 IEEE Int'l Frequency Control Symposium, pp. 365-373, 1994.

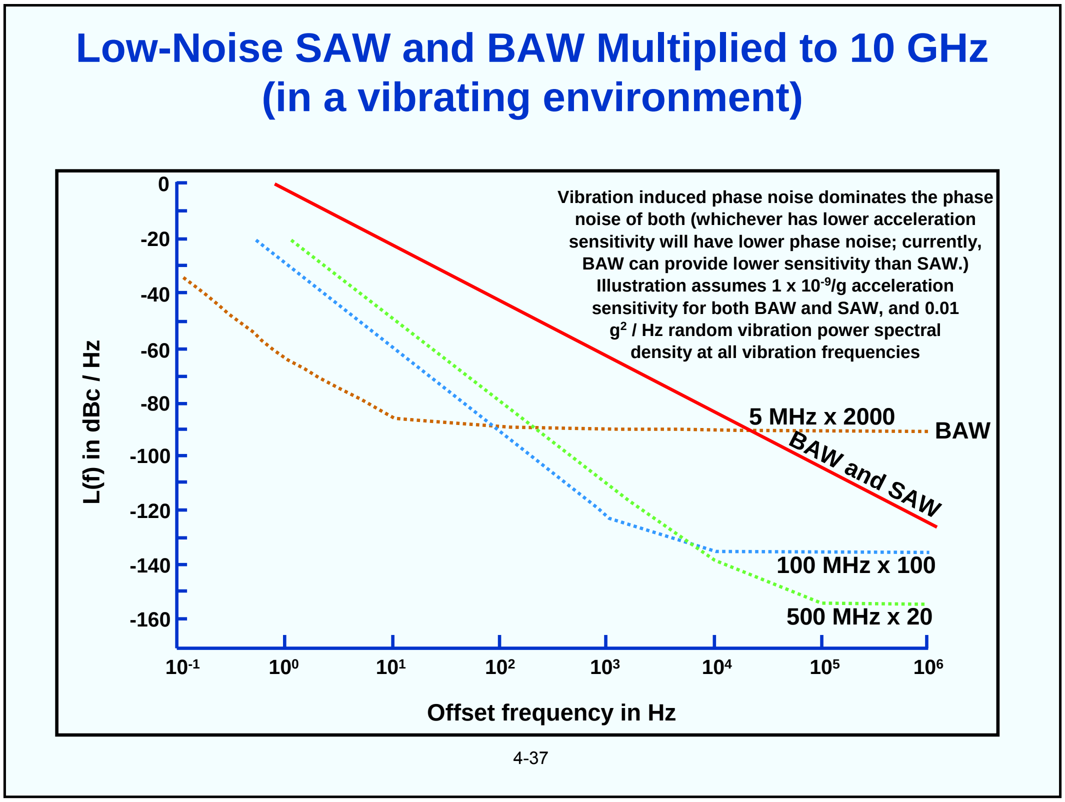

The solid line shows the phase noises under vibration for both BAW and SAW oscillators. The dotted lines show the phase noises without vibration. In the presence of vibration, it is the acceleration sensitivity that determines the phase noise. As is illustrated above, if the BAW and SAW oscillators have equal acceleration sensitivities, then, after multiplication to 10 GHz, they will have equal phase noise levels (up to about 10 kHz from the carrier).

Acceleration sensitivity is discussed later in this chapter. See, especially, the notes under "Vibration-Induced Sidebands - After Frequency Multiplication".

R. L. Filler, "The Acceleration Sensitivity of Quartz Crystal Oscillators: A Review," IEEE Transactions on Ultrasonics, Ferroelectrics, and Frequency Control, Vol. 35, No. 3, pp. 297-305, May 1988.

Effects of Frequency Multiplication

Input		Output
$f_i \equiv f_{in}$		$f_o \equiv f_{out} = M f_i$
Δf_i		$\Delta f_o = M \Delta f_i$
$\frac{\Delta f_i}{f_i} \equiv y$		$\frac{\Delta f_o}{f_o} = \frac{\Delta f_i}{f_i}$
$\Delta \varphi_i$	$f_i \times M = f_o$	$\Delta \phi_o = M \Delta \varphi_i$
$\mathcal{L}(f)_i$	**Noiseless Multiplier**	$\mathcal{L}(f)_o = \mathcal{L}(f)_i + 20 \log M$
$S_\varphi(f)_i$		$S_\varphi(f)_o = M^2 S_\phi(f)_i$
$S_y(f)_i$		$S_y(f)_o = S_y(f)_i$
$\sigma_y(\tau)_i$		$\sigma_y(\tau)_o = \sigma_y(\tau)_i$

Note that $y = \frac{\Delta f}{f}$, $S_y(f)$, and $\sigma_y(\tau)$ are unaffected by frequency multiplication.

-

"QUARTZ CRYSTAL RESONATORS AND OSCILLATORS
For Frequency Control and Timing Applications - A TUTORIAL"
Rev. 8.5.1.2, by John R. Vig, July 2001, AD-M001251.

TCXO Noise

The short term stabilities of TCXOs are temperature (T) dependent, and are generally worse than those of OCXOs, for the following reasons:

- The slope of the TCXO crystal's frequency (f) vs. T varies with T. For example, the f vs. T slope may be near zero at ~20ºC, but it will be ~1ppm/ºC at the T extremes. T fluctuations will cause small f fluctuations at laboratory ambient T's, so the stability can be good there, but millidegree fluctuations will cause ~10^{-9} f fluctuations at the T extremes. The TCXO's f vs. T slopes also vary with T; the zeros and maxima can be at any T, and the maximum slopes can be on the order of 1 ppm/ºC.

- AT-cut crystals' thermal transient sensitivity makes the effects of T fluctuations depend not only on the T but also on the rate of change of T (whereas the SC-cut crystals typically used in precision OCXOs are insensitive to thermal transients). Under changing T conditions, the T gradient between the T sensor (thermistor) and the crystal will aggravate the problems.

- TCXOs typically use fundamental mode AT-cut crystals which have lower Q and larger C_1 than the crystals typically used in OCXOs. The lower Q makes the crystals inherently noisier, and the larger C_1 makes the oscillators more susceptible to circuitry noise.

- AT-cut crystals' f vs. T often exhibit activity dips (see "Activity Dips" later in this chapter). At the T's where the dips occur, the f vs. T slope can be very high, so the noise due to T fluctuations will also be very high, e.g., 100x degradation of $\sigma_y(\tau)$ and 30 dB degradation of phase noise are possible. Activity dips can occur at any T.

-

Quartz Wristwatch Accuracy vs. Temperature

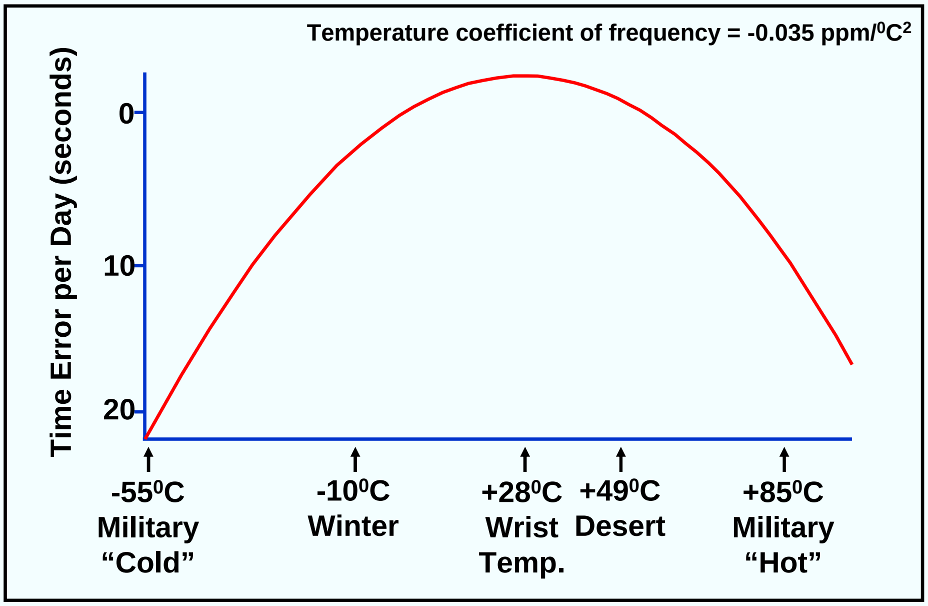

4-40

The frequencies of crystal (as well as all other) oscillators are sensitive to temperature. Illustrated above is the effect for the oscillators used in quartz watches.

Quartz wristwatches are sufficiently accurate, usually, while worn as intended, i.e., on the wrist for ~16 h and off the wrist for ~8 h each day. The accuracies degrade when the watch is off the wrist for extended periods. The further the storage temperature is from the optimum temperature, the faster the watch loses time. At temperature extremes, e.g., in a freezer at - 55^{o}C, or at the temperature of boiling water, wristwatches lose about 20 s per day.

The angle of cut of the resonator used in wristwatches is such that the zero temperature coefficient is at ~25^{0}C. This has been found to provide the highest probability of accuracy, based on the typical durations and temperatures while the watch is on the wrist and while it is off the wrist.

Frequency vs. Temperature Characteristics

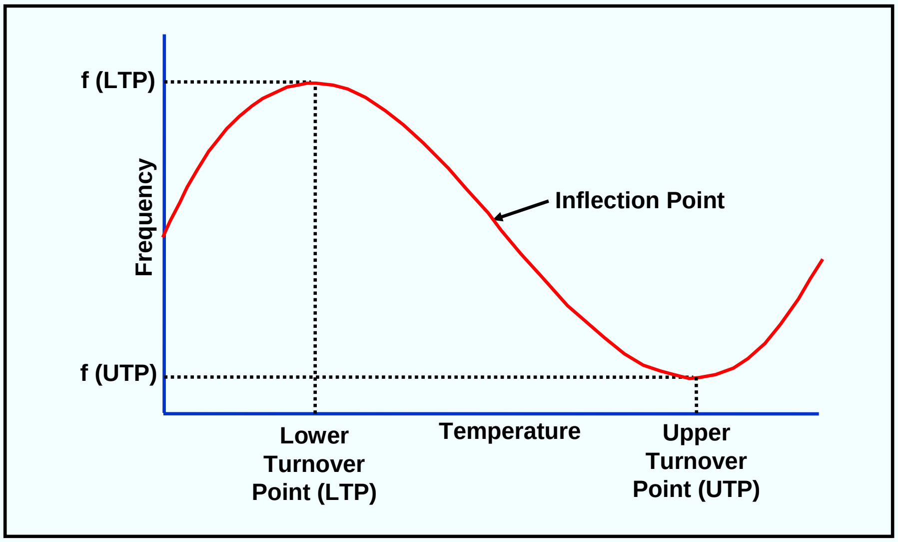

4-41

Shown above is the frequency vs. temperature (f vs. T) characteristic that is typical of e.g., AT-cut and SC-cut resonators. The upper and lower turnover points (UTP and LTP) are the points where the f vs. T has zero slope, i.e., $df(T)/dT = 0$. The corresponding frequencies are the upper and lower turnover frequencies, respectively.

The inflection point is where the curvature of the f vs. T changes from convex to concave, i.e., where $d^2f(T)/dT^2 = 0$. The inflection temperatures are ≈ 26°C for AT-cuts, and ≈ 96°C for SC-cuts.

The values of the inflection temperature, and the dependence of the f vs. T on the angles of cut depend not only on the angles of cut but also on the resonator's design. For example, whereas a 3rd overtone SC-cut's inflection temperature is ~96°C, a fundamental mode SC-cut's is ~105°C.

"Quartz Resonator Handbook - Manufacturing Guide for AT-Type Units," edited by R. E. Bennett, prepared for the US Dep't of the Army, pp. 77-103, 1960, AD-274031.

J. A. Kusters, "The SC Cut Crystal - An Overview," Proc. 1981 IEEE Ultrasonics Symposium, pp. 402-409.

Resonator f vs. T Determining Factors

- **Primary:** Angles of cut

- **Secondary:**
  - Overtone
  - Blank geometry (contour, dimensional ratios)
  - Material impurities and strains
  - Mounting & bonding stresses (magnitude and direction)
  - Electrodes (size, shape, thickness, density, stress)
  - Drive level
  - Interfering modes
  - Load reactance (value & temperature coefficient)
  - Temperature rate of change
  - Thermal history
  - Ionizing radiation

4-42

See the next page for the f vs. T vs. angle-of-cut family of curves for the AT-cut (when all secondary effects are constant).

Frequency-Temperature vs. Angle-of-Cut, AT-cut

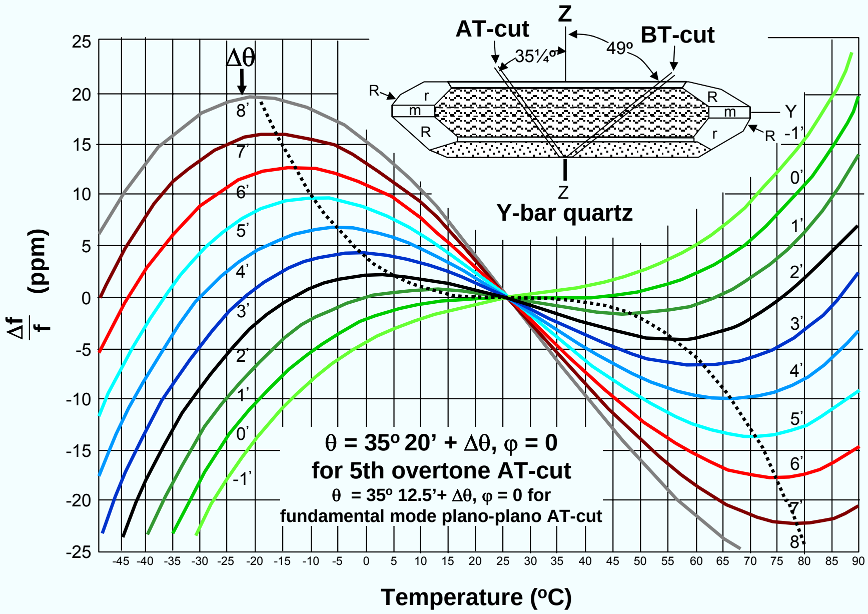

4-43

The inset in the above illustration shows how an AT-cut plate and a BT-cut plate are related to the directions in a quartz bar. The illustration shows how the AT-cut's f vs. T characteristics change as the θ angle of cut (see "Zero Temperature Coefficient Quartz Cuts" in chapter 3) is varied in one minute of arc increments.

The $\Delta\theta$ = 0 curve shows the f vs. T characteristic at the "reference angle," which is θ = 35°12.5' for a fundamental mode AT-cut resonator. At the reference angle, the turnover points coincide with the inflection point. The reference angle varies with design, i.e., with overtone, plate contour, etc.

"Quartz Resonator Handbook - Manufacturing Guide for AT-Type Units," edited by R. E. Bennett, prepared for the US Dep't of the Army, pp. 77-103, 1960, AD-274031.

Desired f vs. T of SC-cut Resonator

for OCXO Applications

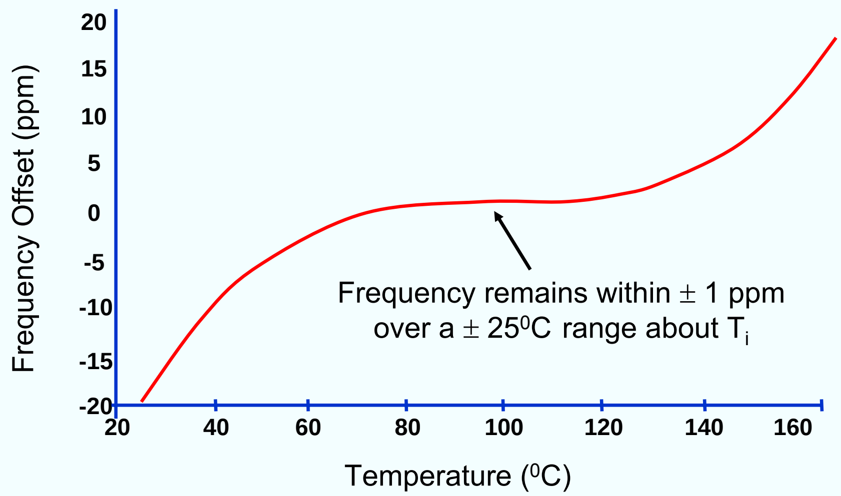

4-44

When the turnover temperatures coincide with the inflection temperature of an SC-cut resonator, the f vs. T slope remains small over a wide temperature range, as is shown above. Such an f vs. T characteristic is ideal for OCXO applications, but such resonators are difficult to manufacture. However, with angle-correction or recontouring, resonators with close to the ideal f vs. T characteristics can be manufactured.

J. R. Vig, W. Washington, and R. L. Filler, "Adjusting the Frequency vs. Temperature Characteristics of SC-cut Resonators by Contouring," Proc. 35th Ann. Symp. on Frequency Control, pp. 104-109, 1981, AD-A110870.

OCXO Oven's Effect on Stability

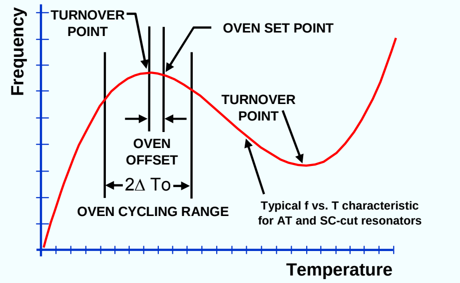

Oven Parameters vs. Stability for SC-cut Oscillator
Assuming $T_i - T_{LTP} = 10^0C$

$T_i - T_{LTP} = 10^0C$		Oven Cycling Range (millidegrees)			
		10	1	0.1	0.01
Oven Offset (millidegrees)	100	4×10^{-12}	4×10^{-13}	4×10^{-14}	4×10^{-15}
	10	6×10^{-13}	4×10^{-14}	4×10^{-15}	4×10^{-16}
	1	2×10^{-13}	6×10^{-15}	4×10^{-16}	4×10^{-17}
	0.1	2×10^{-13}	2×10^{-15}	6×10^{-17}	4×10^{-18}
	0	2×10^{-13}	2×10^{-15}	2×10^{-17}	2×10^{-19}

A comparative table for AT and other non-thermal-transient compensated cuts of oscillators would not be meaningful because the dynamic f vs. T effects would generally dominate the static f vs. T effects.

The f vs. T stability of an OCXO depends on the static and dynamic f vs. T characteristics of the resonator, the design temperature range of the OCXO, the stability of the oven and of the components in the sustaining circuitry, and the accuracy with which the oven is set to the turnover temperature of the resonator. The table shows the theoretically achievable f vs. T of an OCXO as functions of oven offset from turnover temperature, and oven stability. The temperature coefficients of components in the oven and sustaining circuitry make the theoretical values in the table difficult to approach.

The oven stability depends on the temperature range outside the OCXO and the thermal gain of the oven. The thermal gain is defined as the external to internal temperature excursion ratio. For example, if during an external temperature excursion from -40ºC to +60ºC the temperature inside the oven changes by 0.1ºC, the thermal gain is 10^3. For precise temperature control, the oven temperature is typically ~15ºC above the maximum operating temperature, e.g., in an OCXO designed for -40ºC to +60ºC operation, the oven temperature is maintained at +75ºC.

The thermal transient effect makes small oven offsets more difficult and time consuming to achieve with AT-cut resonators than with SC-cuts (see "Warmup of AT- and SC-cut Resonators" two pages forward in this chapter for a discussion and illustration of the thermal transient effect).

Using SC-cut resonators and high thermal gain ovens, OCXO stabilities of $\sim 10^{-10}$ over a -40ºC to +75ºC temperature range have been achieved. High thermal gains can be achieved with a single oven, as described in the Walls reference, or, with double ovens (i.e., an oven in an oven).

A. Ballato, and J. R. Vig, "Static and Dynamic Frequency-Temperature Behavior of Singly and Doubly Rotated, Oven-Controlled Quartz Resonators," Proc. 32nd Annual Symposium on Frequency Control, pp. 180-188, 1978, AD-A955718.

F. L. Walls, "Analysis of High Performance Compensated Thermal Enclosures," Proc. 41st Ann. Symp. on Frequency Control, pp. 439-443, 1987.

Warren L. Smith & T. E. Parker, "Precision Oscillators," in E. A. Gerber and A. Ballato, Precision Frequency Control, Vol. 2, pp. 86-88, Academic Press, 1985.

Marvin E. Frerking, "Temperature Conrol and Compensation," in E. A. Gerber and A. Ballato, Precision Frequency Control, Vol. 2, pp. 99-111, Academic Press, 1985.

Oven Stability Limits

- Thermal gains of 10^5 has been achieved with a feed-forward compensation technique (i.e., measure outside T of case & adjust setpoint of the thermistor to anticipate and compensate), and with double ovens. For example, with a 10^5 gain, if outside $\Delta T = 100^oC$, inside $\Delta T = 1$ mK.
- Stability of a good amplifier ~1μK/K
- Stability of thermistors ~1mK/year to 100mK/year
- Noise < 1μK (Johnson noise in thermistor + amplifier noise + shot noise in the bridge current)
- Quantum limit of temperature fluctuations ~ 1nK
- Optimum oven design can provide very high f vs. T stability

4-46

When power is applied to a frequency standard, it takes a finite amount of time before the equilibrium frequency stability is reached. The figure on the next page illustrates the warmup of two OCXOs. The warmup time of an oscillator is a function of the thermal properties of the resonator, the oscillator and oven control circuits, the oven construction, the input power, and the oscillator's temperature prior to turn-on. Typical warmup time specifications of OCXOs (e.g., from a 0°C start) range from 3 minutes to 10 minutes. Even TCXOs, MCXOs, and simple XOs take a few seconds to "warm up," although these are not ovenized. The reasons for the finite warmup, i.e., the stabilization periods, are that it takes a finite amount of time for the signal to build up in any high-*Q* circuit, and the few tens of milliwatts of power which are dissipated in these oscillators can change the thermal conditions within the oscillators.

Double oven oscillators (in production) have achieved f vs. T stabilities of a few parts in 10^{10} over a wide temperature range.

F. L. Walls, "Analysis of High Performance Compensated Thermal Enclosures," Proc. 41st Ann. Symp. on Frequency Control, pp. 439-443, 1987.

J. R. Vig & F. L. Walls, "Fundamental Limits on the Frequency Instabilities of Quartz Crystal Oscillators," Proc. 1994 IEEE Int'l Frequency Control Symposium, pp. 506-523, 1994.

Warmup of AT- and SC-cut Resonators

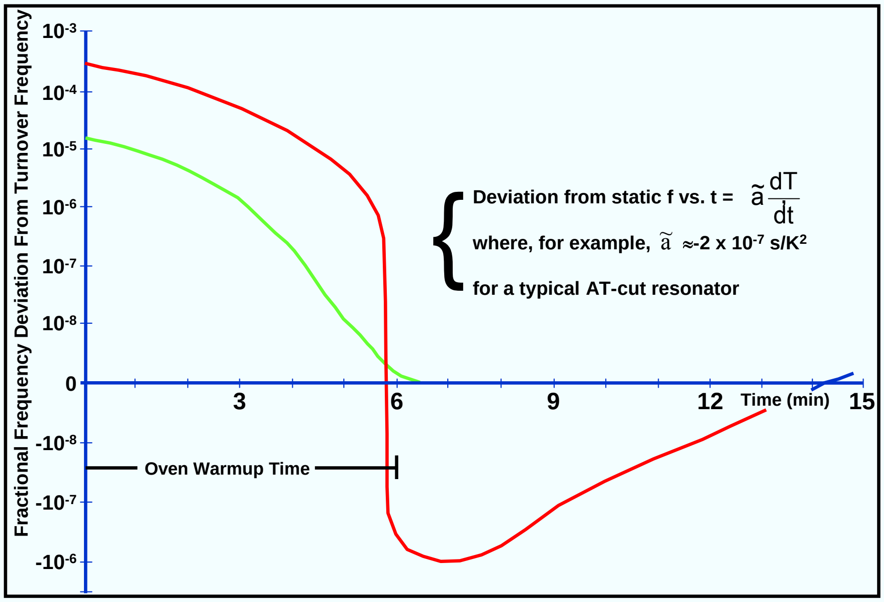

4-47

Changing the temperature surrounding a crystal unit produces thermal gradients when, for example, heat flows to or from the active area of the resonator plate through the mounting clips. The static *f* vs. *T* characteristic is modified by the thermal-transient effect resulting from the thermal-gradient-induced stresses. When an OCXO is turned on, there can be a significant thermal-transient effect. The above figure shows what happens to the frequency output of two OCXOs, each containing an oven that reaches the equilibrium temperature in six minutes. One oven contains an AT-cut, the other, an SC-cut crystal. Thermal gradients in the AT-cut produce a large frequency undershoot that anneals out several minutes after the oven reaches equilibrium. The SC-cut crystal, being "stress-compensated" and thereby insensitive to such thermal-transient-induced stresses, reaches the equilibrium frequency as soon as the oven stabilizes.

In addition to extending the warmup time of OCXOs, when crystals other than SC-cuts are used, the thermal-transient effect makes it much more difficult to adjust the temperature of OCXO ovens to the desired turnover points, and the OCXO frequencies are much more sensitive to oven-temperature fluctuations.

The testing and compensation accuracies of TCXOs are also adversely affected by the thermal-transient effect. As the temperature is changed, the thermal-transient effect distorts the static *f* vs. *T* characteristic, which leads to apparent hysteresis (see “Apparent Hysteresis” later in this chapter). The faster the temperature is changed, the larger is the contribution of the thermal-transient effect to the *f* vs. *T* performance.

A. Ballato, and J. R. Vig, "Static and Dynamic Frequency-Temperature Behavior of Singly and Doubly Rotated, Oven-Controlled Quartz Resonators," Proc. 32nd Annual Symposium on Frequency Control, pp. 180-188, 1978, AD-A955718.

TCXO Thermal Hysteresis

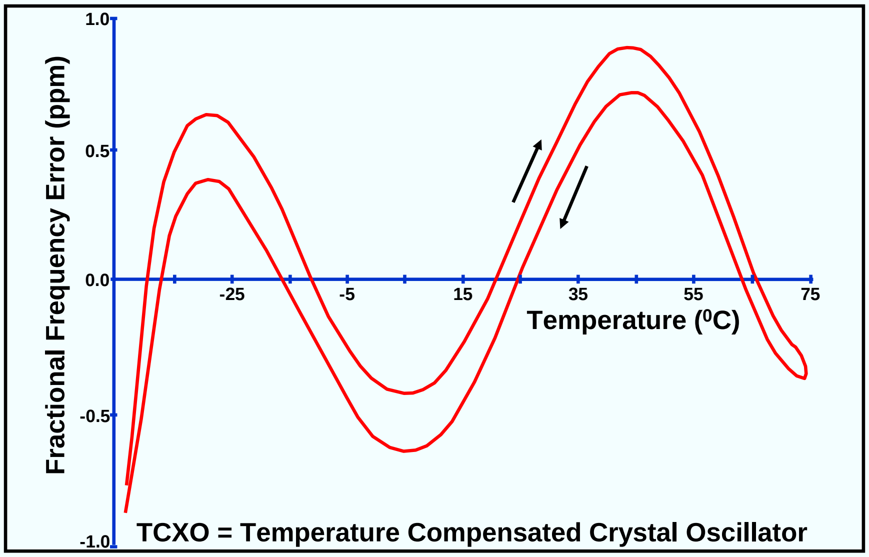

4-48

The *f* vs. *T* characteristics of crystal oscillators do not repeat exactly upon temperature cycling. The lack of repeatability in temperature-compensated crystal oscillators (TCXOs), called "thermal hysteresis," is illustrated above, showing that the f vs. T characteristic upon increasing temperature differs from the characteristic upon decreasing temperature.

Hysteresis is defined as the difference between the up-cycle and the down-cycle *f* vs. *T* characteristics, and is quantified by the value of the difference at the temperature where the difference is maximum. Hysteresis is determined during at least one complete quasistatic temperature cycle between specified temperature limits.

Hysteresis is the major factor limiting the stability achievable with TCXOs. It is especially so in the microcomputer compensated crystal oscillator (MCXO - see chapter 2) because, in principle, the digital compensation method used in the MCXO would be capable of compensating for the *f* vs. *T* variations to arbitrary accuracy (up to the noise limit) if the *f* vs. *T* characteristics could be described by single-valued functions.

Typical values of hysteresis in TCXOs range from 1 ppm to 0.1 ppm when the temperature-cycling ranges are 0°C to 60°C, and -55°C to +85°C. Hysteresis of less than 1×10^{-8} has been observed in a some SC-cut (MCXO) resonators, but the typical MCXO resonator hysteresis is a few parts in 10^{8}.

J. A. Kusters and J. R. Vig, "Thermal Hysteresis in Quartz Resonators - A Review," Proc. 44th Annual Symposium on Frequency Control, pp. 165-175, 1990, IEEE Catalog No. 90CH2818-3. This paper is also available at <http://www.ieee.org/uffc/fc> .

Apparent Hysteresis

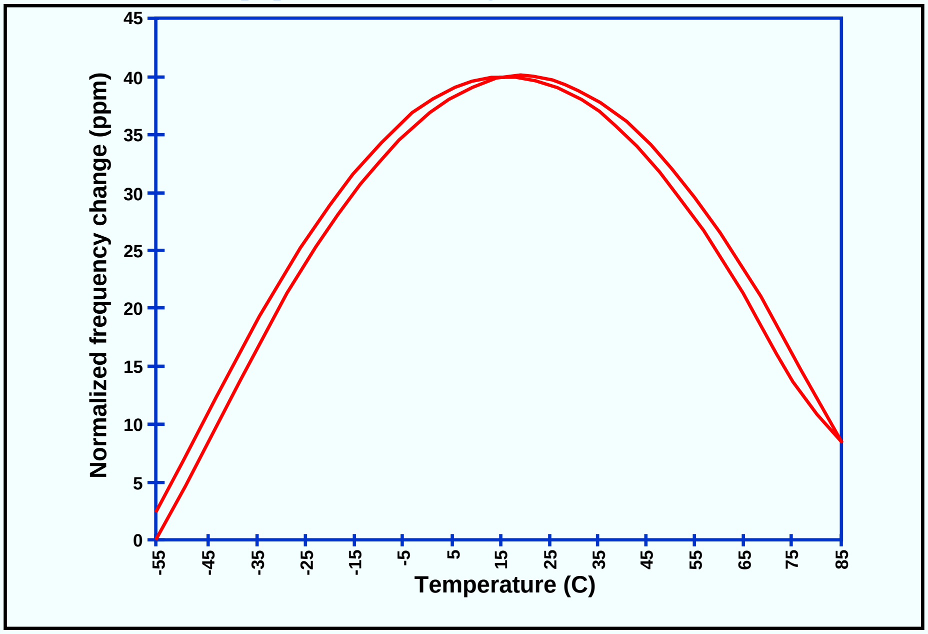

Shown above is the -55ºC to +85ºC to -55ºC frequency vs. temperature characteristic of an SC-cut resonator when the temperature was measured with a quartz thermometer external to the resonator. When, during the same temperature cycle, the temperature was measured by means of the self-temperature sensing method, no hysteresis could be detected when observed on the scale shown above (for a discussion of the self-temperature sensing method, see "Effects of Harmonics on f vs. T" later in this chapter, and "Resonator Self-Temperature Sensing" in chapter 2).

The apparent hysteresis shown above is due to the thermal lag between the resonator and thermometer during the temperature cycle (the rate of change of temperature was ~0.25ºC/min). The left to right shift between the two curves is an indicator that one is observing apparent, rather than real hysteresis. Real hysteresis usually shifts the curves vertically, i.e., in real hysteresis, at the same temperature, there is a frequency difference between the two curves. In apparent hysteresis, the thermal gradients dominate the f vs. T results.

The apparent hysteresis would have been much greater if the resonator had been, e.g., an AT-cut, because of the thermal transient effect (see "Warmup of AT- and SC-cut Resonators," earlier in this chapter).

R. L. Filler, “"Measurement and Analysis of Thermal Hysteresis in Resonators and TCXO's" Proc. 42nd Ann. Symp. On Frequency Control, pp. 380-388, 1988.

J. A. Kusters and J. R. Vig, "Thermal Hysteresis in Quartz Resonators - A Review," Proc. 44th Annual Symposium on Frequency Control, pp. 165-175, 1990, IEEE Catalog No. 90CH2818-3.

R. Filler and J. Vig, "Resonators for the Microcomputer-Compensated Crystal Oscillator," Proc. 43rd Annual Symposium on Frequency Control, pp. 8-15, 1989, IEEE Catalog No. 89CH2690-6.

OCXO Retrace

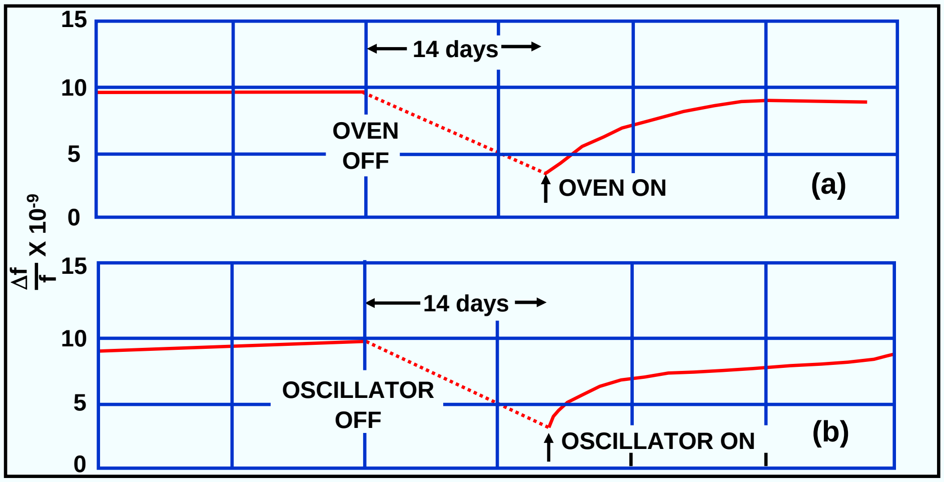

In (a), the oscillator was kept on continuously while the oven was cycled off and on. In (b), the oven was kept on continuously while the oscillator was cycled off and on.

4-50

The lack of repeatability of the *f* vs. *T* characteristics of oven controlled crystal oscillators (OCXOs), called "retrace," is illustrated above. *Retrace* is defined as the nonrepeatability of the *f* vs. *T* characteristic, usually at the oven temperature of an OCXO, upon on-off cycling under specified conditions. Retrace is a function of the storage temperature during the off period.

The OCXO retrace example above shows that upon restarting the oscillator after a 14 day off-period, the frequency was about $7x10^{-9}$ lower than what it was just before turn-off, and that the aging rate had increased significantly upon the restart. About a month elapsed before the pre-turn-off aging rate was reached again. (Figure shows Δf/f in parts in 10^9 vs. time in days.)

Retrace limits the accuracies achievable with OCXOs in applications where the OCXO is on-off cycled. Typical OCXO retrace specifications, after a 24 hour off period at about 25°C, range from 2 x 10^{-8} to 1 x 10^{-9}. Low-temperature storage during the off period, and extending the off period, often make the retrace worse.

The causes of hysteresis and retrace are not well understood. The experimental evidence to date is inconclusive. The mechanisms that can cause these effects include strain changes in the resonator's mounting structure, changes in the quartz, oscillator circuitry changes, contamination redistribution in the crystal enclosure, and apparent hysteresis or retrace due to thermal gradients.

W. L. Smith, and W. J. Spencer, "Quartz Crystal Controlled Oscillators," Final Report, U.S. Army Contract DA36-039 SC-85373, Report No. 25335-H, 15 March 1963, AD-419717.

R. A. Sykes, W. L. Smith, and W. J. Spencer, "Studies on High Precision Resonators," Proc. 17th Annual Symposium on Frequency Control, pp. 4-27, 1963, AD423381. Proc. copies available from NTIS.

J. A. Kusters and J. R. Vig, "Thermal Hysteresis in Quartz Resonators - A Review," Proc. 44th Annual Symposium on Frequency Control, pp. 165-175, 1990, IEEE Catalog No. 90CH2818-3. This paper is also available at <http://www.ieee.org/uffc/fc>

TCXO Trim Effect

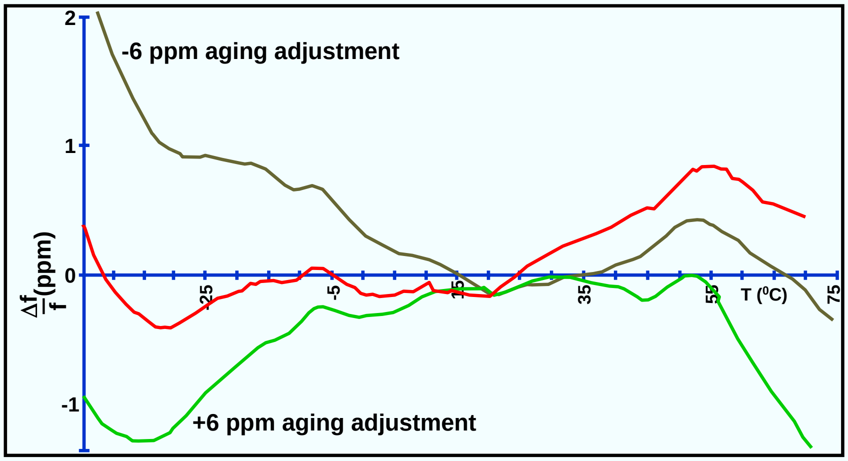

In TCXO's, temperature sensitive reactances are used to compensate for f vs. T variations. A variable reactance is also used to compensate for TCXO aging. The effect of the adjustment for aging on f vs. T stability is the "trim effect". Curves show f vs. T stability of a "0.5 ppm TCXO," at zero trim and at ±6 ppm trim. (Curves have been vertically displaced for clarity.)

An important effect in TCXOs is the interaction between the frequency adjustment during calibration and the f vs. T stability. This phenomenon is called the *trim effect*. In TCXOs, temperature-dependent reactance variations are used to compensate for the crystal's f vs. T variations. During calibration, the crystal's load reactance is varied to compensate for the TCXO's aging. Since the frequency versus reactance relationship is nonlinear (see next page), the capacitance change during calibration moves the operating point on the frequency versus reactance curve to a point where the slope of the curve is different, which changes the compensation (i.e., compensating for aging changes the f vs. T stability). The next page shows how, for the same compensating C_L vs. T, the compensating f vs. T changes when the operating point is moved to a different C_L. Shown above are test results for a "0.5 ppm TCXO" that had a ±6 ppm frequency-adjustment range (to allow for aging compensation for the life of the device). When delivered, this TCXO met its 0.5 ppm f vs. T specification; however, when the frequency was adjusted ±6 ppm during testing, the f vs. T performance degraded significantly. The 0.5 ppm TCXO was shown to be a 2 ppm TCXO.

In specifying a TCXO, it is important to require that the f vs. T stability include the hysteresis and trim effects.

R. L. Filler, V. J. Rosati, S. S. Schodowski, and J. R. Vig, "Specification and Measurement of the Frequency Versus Temperature Characteristics of Crystal Oscillators," Proc. 43rd Annual Symposium on Frequency Control, pp. 253-255, 1989, IEEE Catalog No. 89CH2690-6.

Why the Trim Effect?

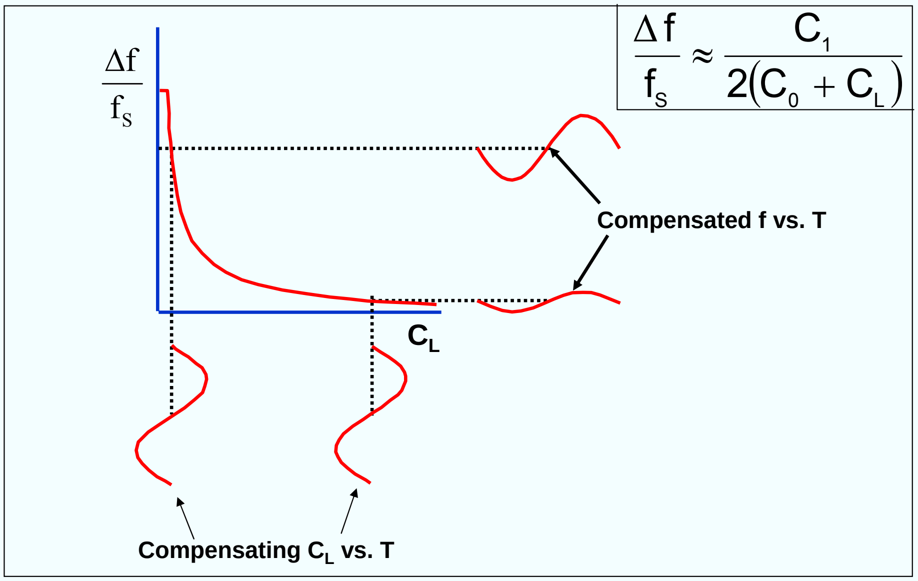

4-52

The same variation of C_l with T causes a different f vs. T compensation when the value of C_L is changed.

"QUARTZ CRYSTAL RESONATORS AND OSCILLATORS
For Frequency Control and Timing Applications - A TUTORIAL"
Rev. 8.5.1.2, by John R. Vig, July 2001, AD-M001251.

Effects of Load Capacitance on f vs. T

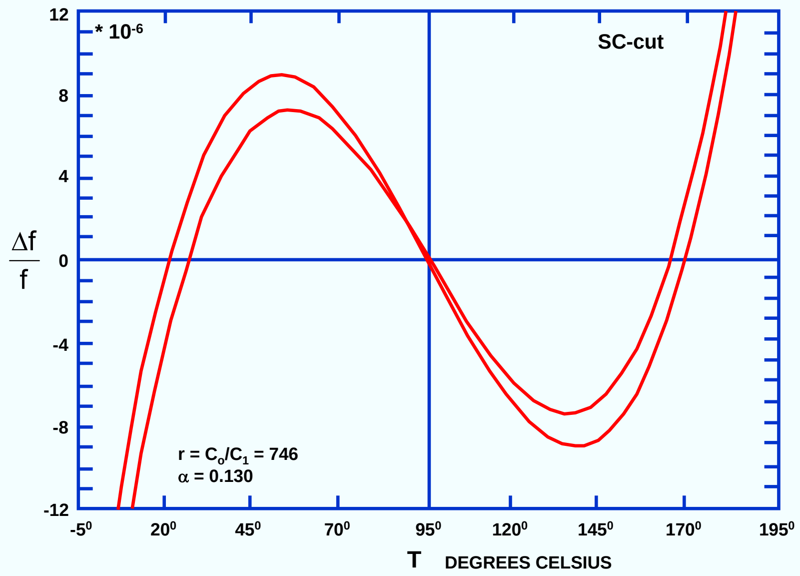

4-53

A load capacitor, C_L, changes not only the frequency (see chapter 3), but also the frequency vs. temperature characteristic. Shown above are the f vs. T characteristics of the same resonator with and without a C_L. The C_L rotates the f vs. T curve as if the angle of cut had been lowered (because the combined effect of the resonator and C_L lowers the effect of piezoelectricity, as explained in the reference below). So, the C_L raises the frequency at all temperatures (the curve with f_L has been vertically displaced for clarity), and it also rotates the f vs. T to a lower apparent angle of cut, i.e., it reduces the turning-point-to-turning-point frequencies and temperatures.

The temperature coefficient of C_L can greatly amplify the f vs. T rotation.

A. Ballato, "Frequency-Temperature-Load Capacitance Behavior of Resonators for TCXO Application," IEEE Trans. Sonics Ultrasonics., SU-25, pp.185-191, July 1978.

Effects of Harmonics on f vs. T

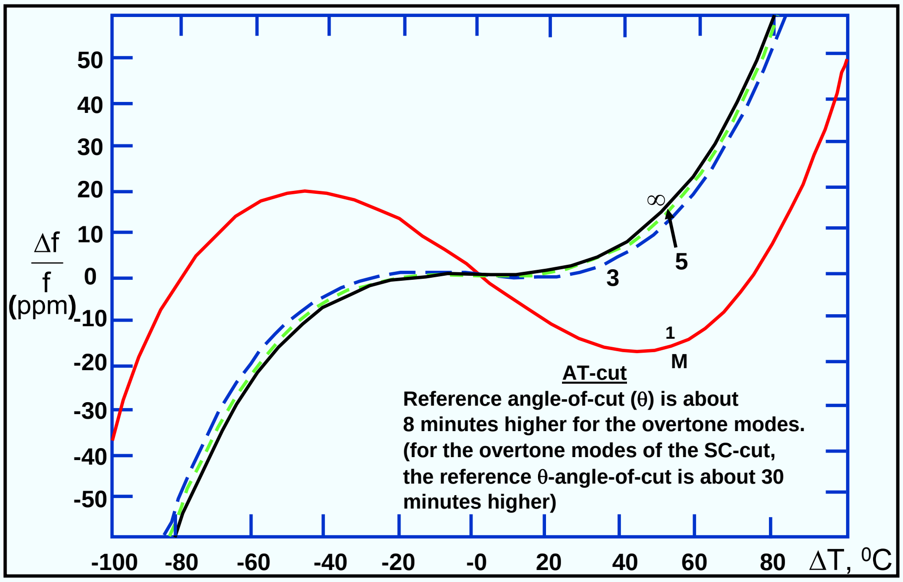

4-54

Shown above are the frequency vs. temperature characteristics of a resonator excited on the fundamental mode, third overtone, and fifth and higher overtones. The f vs. T of the fundamental mode is different from that of the same resonator's third and higher overtones. When excited on the third overtone, the f vs. T is only slightly different from that of the 5th overtone (because the higher the overtone, the less the effects of piezoelectricity, as is explained in the Ballato reference). The rotation of the f vs. T with overtone is as if the angle of cut had been lowered. For example, for an AT-cut, the third overtone's f vs. T is the same as that of a fundamental mode resonator the angle of cut of which is eight minutes lower.

When the f vs. T characteristics are described by polynomials, it is found that the change between the fundamental and 3rd and higher overtones are due almost entirely to a change in the first order temperature coefficient, i.e., the linear terms of the polynomials. This fact is exploited in the microcomputer compensated crystal oscillator (MCXO - see the MCXO discussions in chapter 2). In the MCXO, the fundamental (f_1) and third overtone (f_3) frequencies are excited simultaneously ("dual mode" excitation) and a beat frequency f_β is generated such that $f_\beta = 3f_1 - f_3$ (or $= f_1 - f_3/3$). The f_β is then a monotonic and nearly linear function of temperature. The resonator can, thereby, become its own thermometer ("self-temperature sensing"). The f_β senses the resonator's temperature exactly where the resonator is vibrating, thereby eliminating temperature gradient effects, and, because an SC-cut is used, thermal transient effects are also eliminated.

"Quartz Resonator Handbook - Manufacturing Guide for AT-Type Units," edited by R. E. Bennett, prepared for the US Dep't of the Army, pp. 77-103, 1960, AD-274031.

A. Ballato, and T. Lukaszek, "Higher Order Temperature Coefficients of Frequency of Mass-Loaded Piezoelectric Crystal Plates," Proc. 29th Ann. Symp. on Frequency Control, pp. 10-25, 1975, AD-A017466. Proc. copies available from NTIS.

Amplitude - Frequency Effect

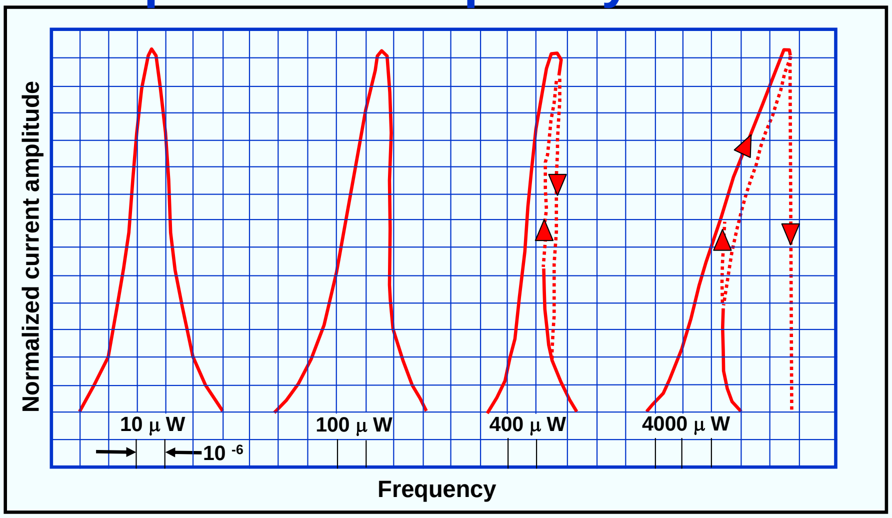

At high drive levels, resonance curves become asymmetric due to the nonlinearities of quartz.

4-55

When the frequency is swept through resonance, as the driving voltage is increased, the resonance curve bends over due to the nonlinear constants of quartz. The peak of each curve is the resonance frequency. The AT-cut, illustrated above, bends towards higher frequencies, i.e., it behaves as a hard spring (a hard spring's stiffness increases with increasing displacement). Some other cuts behave as soft springs; the resonance curve bends towards lower frequencies. The locus of the maxima of the resonance curves varies as the square of the current, $\Delta f/f = \boldsymbol{a}I^2$, where $\boldsymbol{a}$ is typically in the range of $0.02/A^2$ to $0.2/A^2$; $\boldsymbol{a}$ depends on resonator design - angles of cut, overtone, plate contour, etc.

At high drive levels, the amplitude vs. frequency curves can be triple valued functions, but only the highest and lowest values are accessible experimentally (upon increasing and decreasing voltages, respectively). The current vs. frequency exhibits discontinuities as the driving voltage (or frequency) is increased or decreased around the resonance peak.

D. Hammond, C. Adams, and L. Cutler, "Precision Crystal Units," Proc. 17th Annual Symposium on Frequency Control, pp. 215-232, 1963, AD-423381.

R. L. Filler, "The Amplitude-Frequency Effect in SC-Cut Resonators," Proc. 39th Annual Symposium on Frequency Control, pp. 311-316, 1985, IEEE Catalog No. 85CH2186-5.

H. F. Tiersten and D. S. Stevens, "The Evaluationof the Coefficients of Nonlinear Resonance for SC-cut Quartz Resonators," Proc. 39th Annual Symposium on Frequency Control, pp. 325-332, 1985, IEEE Catalog No. 85CH2186-5.

J.J. Gagnepain and R. Besson, "Nonlinear Effects in Piezoelectric Quartz Crystals," in Physical Acoustics, Vol. XI, pp. 245-288, W.P. Mason & R.N. Thurston, editors, Academic Press, 1975

Frequency vs. Drive Level

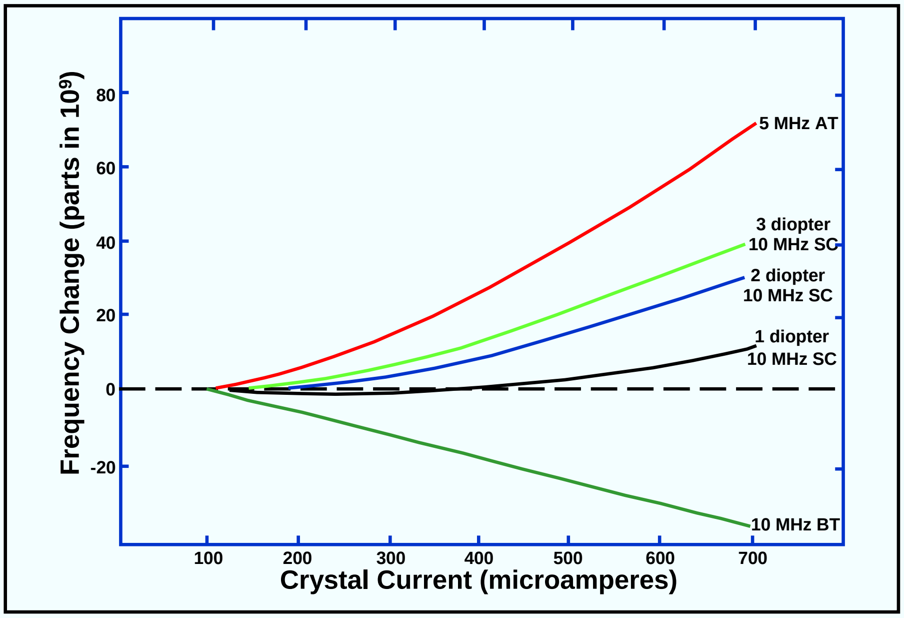

Frequency varies as the current amplitude squared; $f = f_0 (1 + \boldsymbol{a}I^2)$, where ***a*** is a constant that is a function of the design, i.e., the appropriate nonlinear elastic constant for the resonator type used, and I is the current.

Useful drive levels are limited at the high end by the nonlinearities of quartz, and at the low end by noise (or defects, as discussed on the next page).

J. A. Kusters, "The SC Cut Crystal - An Overview," Proc. 1981 IEEE Ultrasonics Symposium, pp. 402-409.

J.J. Gagnepain and R. Besson, "Nonlinear Effects in Piezoelectric Quartz Crystals," in *Physical Acoustics*, Vol. XI, pp. 245-288, W.P. Mason & R.N. Thurston, editors, Academic Press, 1975

R. L. Filler, "The Amplitude-Frequency Effect in SC-Cut Resonators," Proc. 39th Annual Symposium on Frequency Control, pp. 311-316, 1985, IEEE Catalog No. 85CH2186-5.

D. Hammond, C. Adams, and L. Cutler, "Precision Crystal Units," Proc. 17th Annual Symposium on Frequency Control, pp. 215-232, 1963, AD-423381.

Drive Level vs. Resistance

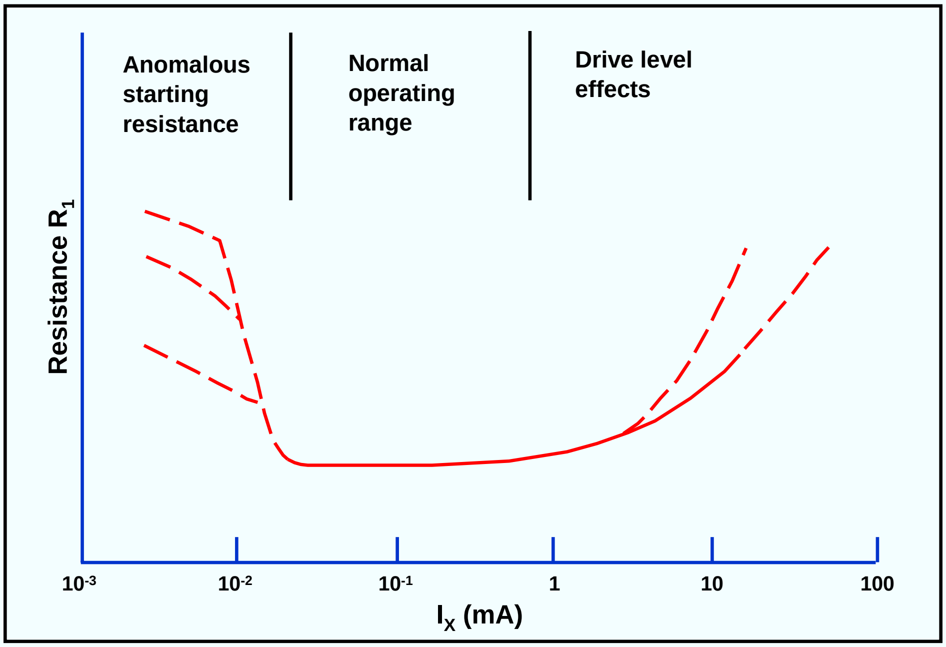

4-57

The high resistance at low drive currents, and the “second level of drive” effect shown on the next page, are troublesome because they can appear and cause failure well after the resonator has passed the final manufacturing tests. The effect can prevent oscillator start-up when the oscillator circuit’s gain is insufficient. In some resonators, the effect can be “cured” by applying a high drive level, however, such cures are often not permanent. The effect can reappear long after the high drive level was applied. (Increasing the drive level increases the amplitude of vibration at the resonator’s surface, which can remove surface contamination. However, when the high drive is applied to a hermetically sealed resonator, the contamination stays within the enclosure and can redeposit at a later time.)

Removing loose particles and other surface contaminants during processing, before the resonator is sealed into its enclosure, e.g., by properly etching and cleaning the resonators, can significantly reduce the incidence of this effect. Imperfections in the electrodes, such as scratches, blisters and irregular adhesion can also produce the effect.

Properly made resonators show no resistance increase at low drive levels - down to at least 10^{-5} amperes of drive current*.

----

* R. Smythe, Piezo Technology, Inc., private communication, April 1999.

M. Bernstein, “Increased Crystal Unit Resistance at Oscillator Noise Levels,” Proc. 21st Annual Symposium on Frequency Control, pp. 244-258, 1967.

J. E. Knowles, "On the Origin of the 'Second Level of Drive' Effect in Quartz Oscillators," Proc. 29th Annual Symposium on Frequency Control, pp. 230-236, 1975, AD-A017466.

E. P. EerNisse, “An Analysis of the Drive Level Sensitivity in Thickness Shear Quartz Resonators,” Proc. 1996 Int’l Frequency Control Symposium, pp. 346-356, 1996, IEEE Cat. No. 96CH35935.

E.P EerNisse, E. Benes, M. Schmid, “The Role of Localized Rotational Imbalance in Drive Level Dependence Phenomena,” Pro. 2002 IEEE Int’l Frequency Control Symp., pp. 2-7, 2002.

Second Level of Drive Effect

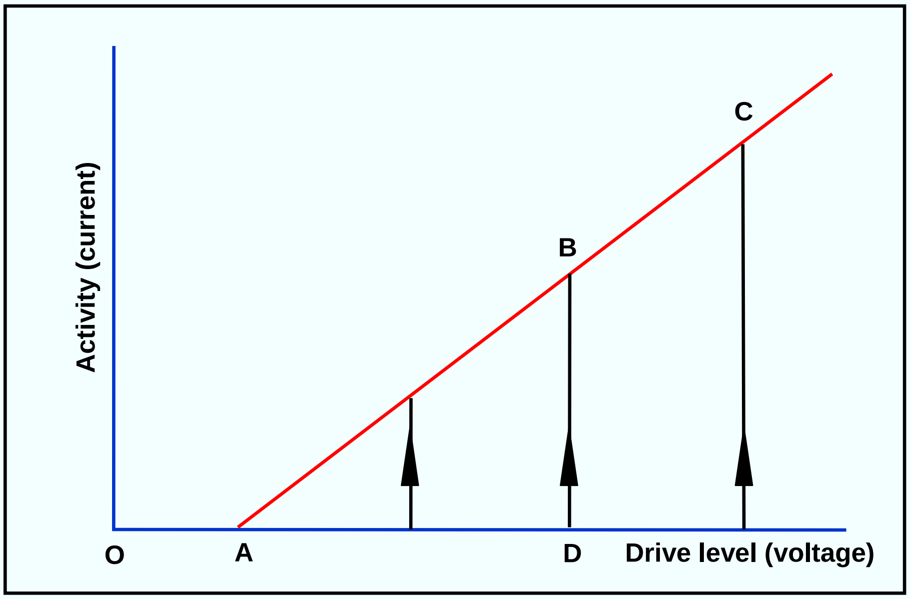

4-58

A “good” crystal will follow the path OABCBAO without hysteresis. A “bad” crystal will follow the path OADBCBAO: hence the term “second level of drive”. Upon increasing the drive again, there is a tendency for the magnitude of the effect to decrease, but in a very irregular and irreproducible manner. The effect is usually due to particulate contamination, loose electrodes, or other surface defects.

M. Bernstein, “Increased Crystal Unit Resistance at Oscillator Noise Levels,” Proc. 21st Annual Symposium on Frequency Control, pp. 244-258, 1967.

J. E. Knowles, "On the Origin of the 'Second Level of Drive' Effect in Quartz Oscillators," Proc. 29th Annual Symposium on Frequency Control, pp. 230-236, 1975, AD-A017466.

E. P. EerNisse, “An Analysis of the Drive Level Sensitivity in Thickness Shear Quartz Resonators,” Proc. 1996 Int’l Frequency Control Symposium, pp. 346-356, 1996, IEEE Cat. No. 96CH35935

E.P EerNisse, E. Benes, M. Schmid, “The Role of Localized Rotational Imbalance in Drive Level Dependence Phenomena,” Pro. 2002 IEEE Int’l Frequency Control Symp., pp. 2-7, 2002.

Activity Dips

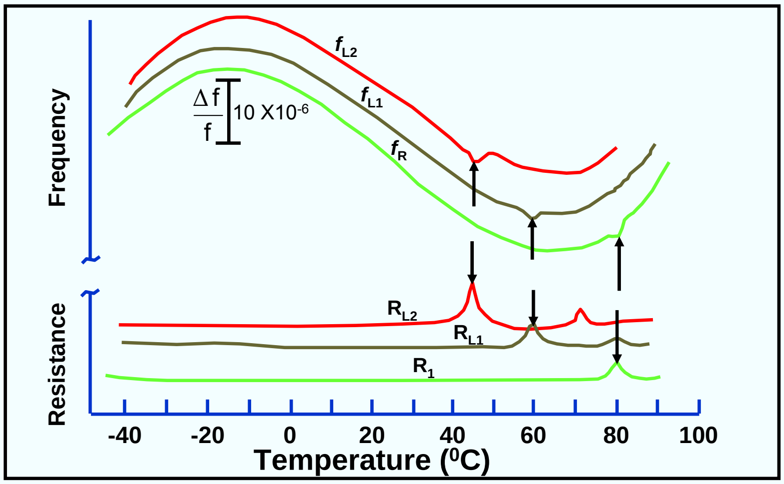

Activity dips in the f vs. T and R vs. T when operated with and without load capacitors. Dip temperatures are a function of C_L, which indicates that the dip is caused by a mode (probably flexure) with a large negative temperature coefficient.

Anomalies in the f vs. T and R vs. T characteristics, as illustrated above, are called "activity dips". The curves labeled f_R and R_1 are the f vs. T and R vs. T without a load capacitor. The f_L and R_L curves are the f vs. T and R vs. T of the same resonator when load capacitors are in series with the resonator. The load capacitors shift the frequency to higher values; the curves have been vertically displaced for clarity.

An activity dip can cause intermittent failures. It affects both the frequency and the resistance (i.e., the Q) of resonators. When the oscillator gain is insufficient, the resistance increase stops the oscillation. For example, the clock in one satellite stopped periodically a certain time interval after the satellite entered the earth's shadow. As the satellite cooled, the oscillator's temperature reached the activity dip temperature and the oscillation stopped. Upon further temperature change, the oscillation resumed.

Even when the resistance increase is not large enough to stop the oscillation, the frequency change can cause intermittent failures, e.g., it can cause a loss of lock in phase locked systems.

Activity dips are usually caused by interfering modes (e.g., by high overtone flexure modes). Such activity dips are strongly influenced by the crystal's drive level and load reactance. The activity-dip temperature is a function of C_L because the interfering mode's frequency usually has a large temperature coefficient and a C_1 that is different from that of the desired mode. When the frequency of the interfering mode coincides with the frequency of the main mode, energy is lost from the main mode and an activity dip occurs.

Activity dip like features can also be caused by processing problems, e.g., loose contacts. Such dips usually change with temperature cycling, rather than with load capacitance.

A. Ballato and R. Tilton, "Electronic Activity Dip Measurement," IEEE Trans. on Instrumentation and Measurement, Vol. IM-27, No. 1, pp. 59-65, March 1978; also "Ovenless Activity Dip Tester," in Proc. 31st Ann. Symp. On Frequency Control, pp. 102-107, 1977.

See also "Overtone Response…" & "Unwanted Modes vs. Temperature" in Chapter 3.

E.P EerNisse, E. Benes, M. Schmid, "The Role of Localized Rotational Imbalance in Drive Level Dependence Phenomena," Pro. 2002 IEEE Int'l Frequency Control Symp., pp. 2-7, 2002.

Frequency Jumps

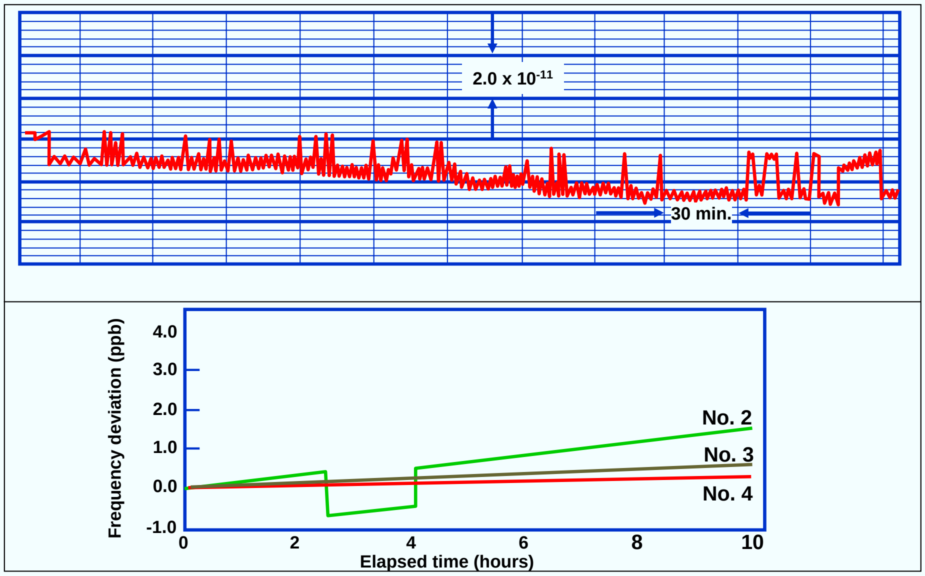

4-60

When the frequencies of oscillators are observed for long periods, occasional frequency jumps can be seen. In precision oscillators, the magnitudes of the jumps are typically in the 10^{-11} to 10^{-9} range. The jumps can be larger in general purpose units. The jumps occur many times a day in some oscillators, and much less than once a day in others. The frequency excursions can be positive or negative. The causes (and cures) are not well understood.

The causes are believed to include the resonator - nearby spurious resonances, stress relief, changes in surface and electrode irregularities; and noisy active and passive circuit components, such as the bistable "burst noise" observed in solid state devices and resistors (which look similar to some of the features in the upper curve above). The effect can depend on resonator drive level. In some units, frequency jumps can be produced at certain drive levels (but not below or above, as can be seen in the Koyama reference). Aging affects the incidence. Well aged units show a lower incidence of jumps than new units (or newly turned on units). Minimizing surface and electrode imperfections can contribute to lowering the incidence of jumps (e.g., according to hearsay, unetched or lightly etched crystals exhibit more jumps than deeply etched crystals; and plating and frequency adjustment in two steps result in more jumps than "one-shot" plating).

Environmental effects can also produce jumps. Magnetic field, pressure, temperature, and power transients can produce sudden frequency excursions, as can shock and vibration. It is not unusual, for example, to experience shock and vibration levels of >0.01g in buildings as trucks pass by, heavy equipment is moved, boxes are dropped, etc. [Note that, for example, $0.02g \times 10^{-9}/g = 2 \times 10^{-11}$.]

K. K. Tuladhar & G. Jenni, "Frequency Jumps on BVA & Other Precision Quartz Crystal Resonators and Burst-Noise on Overtone Mode High-Frequency Quartz Crystal Resonators," Proc. 1996 IEEE Int'l Frequency Control Symp., pp. 339-342, 1996, IEEE Cat. No. 96CH35935.

M. Koyama, "An Experimental Study of Long Term Aging of Quartz Oscillators," Proc. 1995 IEEE Int'l Frequency Control Symp., pp. 620-622, 1995, IEEE Cat. No. 95CH35752.

G. E. Moulton, "Burst Noise and 1/F Noise in Quartz Crystals and Oscillators," Proc. 42nd Ann. Symp. on Frequency Control, pp. 389-396, 1988.

M. J. Buckingham, Noise in Electronic Devices and Systems, Chapter 7, "Burst Noise," Ellis Horwood Ltd., Halsted Press: a div. of John Wiley & Sons, New York, 1983.

Acceleration Affects "Everything"

- Acceleration → Force → Deformation (strain) →
  Change in material and device properties - to some level
- Examples:
  - Quartz resonator frequency
  - Amplifier gain (strain changes semiconductor band structure)
  - Laser diode emission frequencies
  - Optical properties - fiber index of refraction (acoustooptics)
  - Cavity frequencies
  - DRO frequency (strain changes dielectric constants)
  - Atomic clock frequencies
  - Stray reactances
  - Clock rates (relativistic effects)

Acceleration vs. Frequency Change

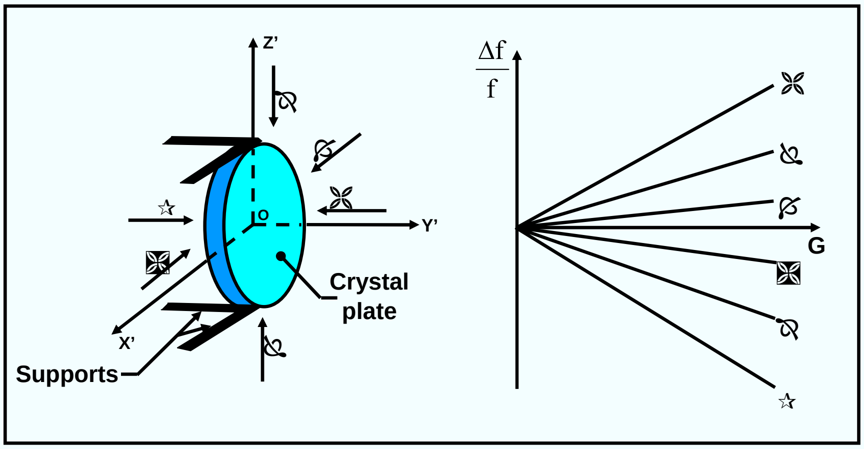

Frequency shift is a function of the magnitude and direction of the acceleration, and is usually linear with magnitude up to at least 50 g's.

4-62

When a resonator experiences an acceleration, the strains due to the acceleration cause frequency changes, as shown above. Under vibration, the time varying strains cause time dependent frequency changes, i.e., the vibration causes frequency modulation, as shown on the pages that follow.

The relationship between frequency and acceleration can become nonlinear at high accelerations due to deformation of the mounting structure. The acceleration sensitivity can also be a function of temperature.

M. Valdois, J. Besson, and J.J. Gagnepain, "Influence of Environment conditions on a Quartz Resonator," Proc. 28th Annual Symposium on Frequency control, pp. 19-32, 1794, AD-A011113.

R. L. Filler, "The Acceleration Sensitivity of Quartz Crystal Oscillators: A Review," IEEE Transactions on Ultrasonics, Ferroelectrics, and Frequency Control, Vol. 35, No. 3, pp. 297-305, May 1988.

J. R. Vig, C. Audoin, L. S. Cutler, M. M. Driscoll, E. P. EerNisse, R. L. Filler, R. M. Garvey, W. L. Riley, R. C. Smythe, and R. D. Weglein, "Acceleration, Vibration and Shock Effects - IEEE Standards Project P1193," Proc. 1992 IEEE Frequency Control Symposium, 763-781, 1992; also, The Effects of Acceleration on Precision Frequency Sources, U. S. Army Laboratory Command Research and Development Technical Report SLCET-TR-91-3, March 1991, AD-A235470.

2-g Tipover Test

(Δf vs. attitude about three axes)

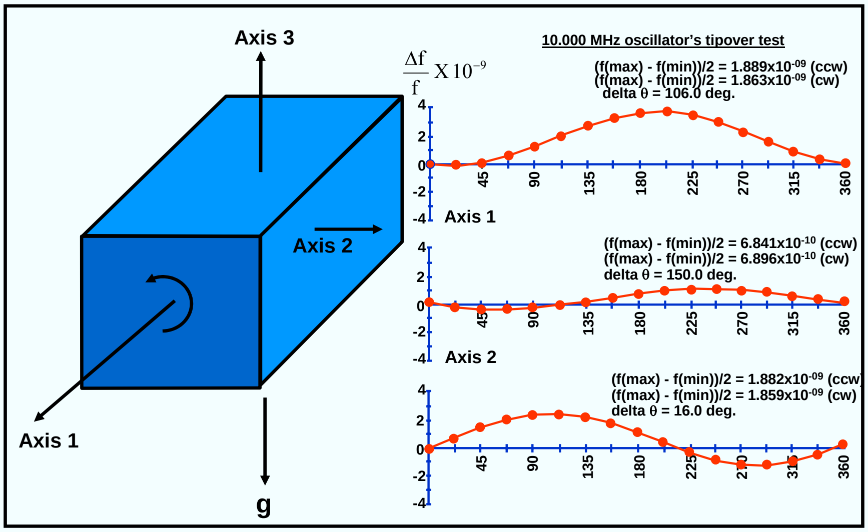

4-63

When an oscillator is rotated 180^0 about a horizontal axis, the scalar product of the gravitational field and the unit vector normal to the initial "top" of the oscillator changes from -1g to +1g, i.e., by 2g. A simple "2g tipover" test is sometimes used to test an oscillator's acceleration sensitivity. Above is actual data of the fractional frequency shifts of an oscillator when the oscillator was rotated about three mutually perpendicular axes in the earth's gravitational field. For each curve, the axis of rotation was horizontal. The sinusoidal shape of each curve is a consequence of the scalar product being proportional to the cosine of the angle between the acceleration-sensitivity vector (see later) and the acceleration due to gravity.

The 2g tipover test must not be used indiscriminately because many oscillators exhibit irregular variations of frequency with attitude when tested in small increments of angle rather than with just simple 180^o rotations. Irregularities can be caused by, for example, temperature changes due to air convection in the oscillator, and tiny movements of components, circuit boards and wires. When the frequency vs. attitude behavior is nonsinusoidal, the results of a simple 2g tipover test can be highly misleading.

R. L. Filler, "The Acceleration Sensitivity of Quartz Crystal Oscillators: A Review," IEEE Transactions on Ultrasonics, Ferroelectrics, and Frequency Control, Vol. 35, No. 3, pp. 297-305, May 1988.

J. R. Vig, C. Audoin, L. S. Cutler, M. M. Driscoll, E. P. EerNisse, R. L. Filler, R. M. Garvey, W. L. Riley, R. C. Smythe, and R. D. Weglein, "Acceleration, Vibration and Shock Effects - IEEE Standards Project P1193," Proc. 1992 IEEE Frequency Control Symposium, 763-781, 1992; also, The Effects of Acceleration on Precision Frequency Sources, U. S. Army Laboratory Command Research and Development Technical Report SLCET-TR-91-3, March 1991, AD-A235470.

IEEE Standard 1193-1994, "IEEE Guide for Measurement of Environmental Sensitivities of Standard Frequency Generators".

Sinusoidal Vibration Modulated Frequency

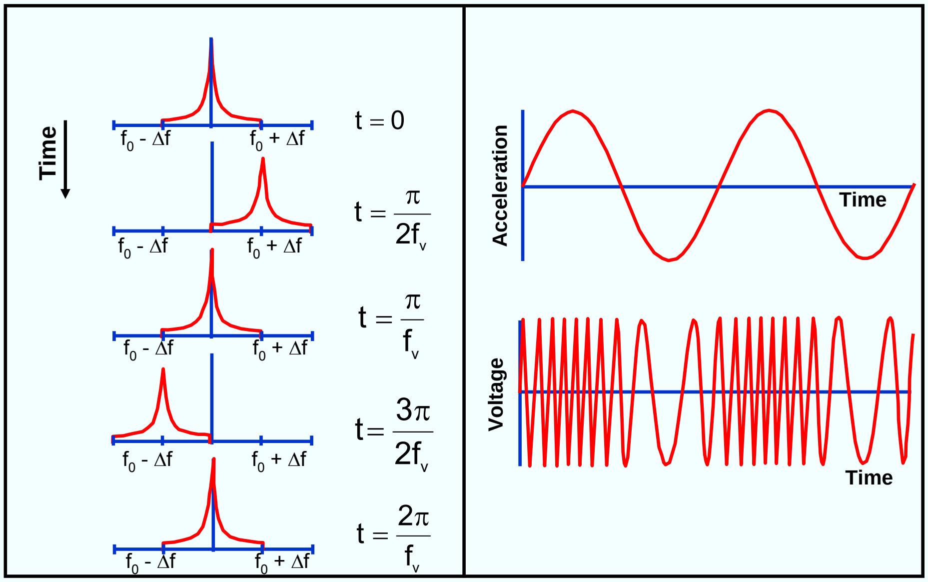

4-64

The above illustration shows how a time varying stress due to a time varying (sinusoidal) acceleration changes the frequency of a resonator, i.e., how the vibration frequency modulates the oscillator's frequency.

R. L. Filler, "The Acceleration Sensitivity of Quartz Crystal Oscillators: A Review," IEEE Transactions on Ultrasonics, Ferroelectrics, and Frequency Control, Vol. 35, No. 3, pp. 297-305, May 1988.

Acceleration Levels and Effects

Environment	Acceleration typical levels*, in g's	Δf $x10^{-11}$, for $1x10^{-9}$/g oscillator
Buildings**, quiesent	0.02 rms	2
Tractor-trailer (3-80 Hz)	0.2 peak	20
Armored personnel carrier	0.5 to 3 rms	50 to 300
Ship - calm seas	0.02 to 0.1 peak	2 to 10
Ship - rough seas	0.8 peak	80
Propeller aircraft	0.3 to 5 rms	30 to 500
Helicopter	0.1 to 7 rms	10 to 700
Jet aircraft	0.02 to 2 rms	2 to 200
Missile - boost phase	15 peak	1,500
Railroads	0.1 to 1 peak	10 to 100

* Levels at the oscillator depend on how and where the oscillator is mounted
Platform resonances can greatly amplify the acceleration levels.
** Building vibrations can have significant effects on noise measurements

Acceleration (vibration) is present nearly everywhere. When an accelerometer is attached to a workbench for a day in a typical "quiet laboratory," 10^{-3} to 10^{-2} g peak levels can usually be measured. Buildings vibrate, and these vibrations can affect noise measurements. Even "low" levels of vibration can produce significant errors while evaluating low-noise oscillators.

In applications where the platform vibrates, such as in an aircraft, the vibration induced phase noise degradation can cause severe problems - see, for example, "Random-Vibration-Induced Phase Noise," and "Phase Noise Degradation Due to Vibration," in the pages that follow.

The above table was compiled by Arthur Ballato based on AMC Pamphlet 706-117, Engineering Design Handbook, "Environmental Series, Part Three, Induced Environmental Factors," HQ US Army Materiel Command, Alexandria, VA 22333, USA, January 1976, chapters 4, 5, and 6.

Acceleration Sensitivity Vector

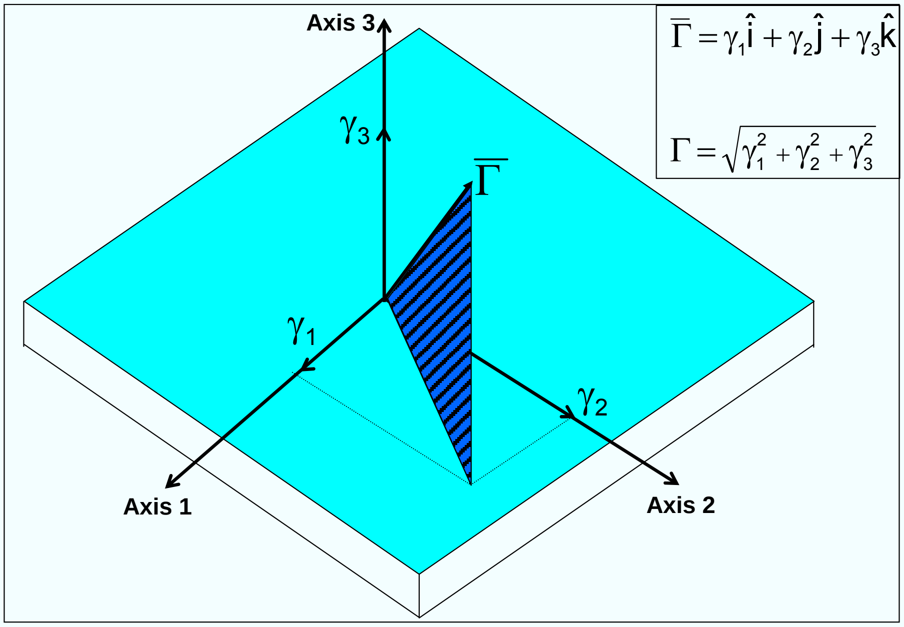

$$\overline{\Gamma} = \gamma_1\hat{i} + \gamma_2\hat{j} + \gamma_3\hat{k}$$

$$\Gamma = \sqrt{\gamma_1^2 + \gamma_2^2 + \gamma_3^2}$$

Acceleration-sensitivity is a vector, i.e., the acceleration-induced frequency shift is maximum when the acceleration is along the acceleration-sensitivity vector; $\Delta f = \overline{\Gamma} \bullet \overline{A}$

It has been shown, empirically, that the acceleration sensitivity of a quartz crystal oscillator is a vector quantity. The frequency of an accelerating oscillator is a maximum when the acceleration is parallel to the acceleration-sensitivity vector. The frequency shift is zero for any acceleration in the plane normal to the acceleration-sensitivity vector, and it is negative when the acceleration is antiparallel to the acceleration-sensitivity vector.

Typical values of $|\Gamma|$ for precision crystal oscillators are in the range of 10^{-9} per g to 10^{-10} per g. $|\Gamma|$ is independent of acceleration amplitude for the commonly encountered acceleration levels (i.e., at least up to 20g); however, high acceleration levels can result in changes, e.g., in the mounting structure, that can lead to Γ being a function of acceleration. Γ can also be a function of temperature.

The magnitude of the acceleration sensitivity is the vector sum (square-root of the sum of the squares) of the sensitivities along three mutually perpendicular axes.

R. L. Filler, "The Acceleration Sensitivity of Quartz Crystal Oscillators: A Review," IEEE Transactions on Ultrasonics, Ferroelectrics, and Frequency Control, Vol. 35, No. 3, pp. 297-305, May 1988.

J. R. Vig, C. Audoin, L. S. Cutler, M. M. Driscoll, E. P. EerNisse, R. L. Filler, R. M. Garvey, W. L. Riley, R. C. Smythe, and R. D. Weglein, "Acceleration, Vibration and Shock Effects - IEEE Standards Project P1193," Proc. 1992 IEEE Frequency Control Symposium, 763-781, 1992; also, <u>The Effects of Acceleration on Precision Frequency Sources</u>, U. S. Army Laboratory Command Research and Development Technical Report SLCET-TR-91-3, March 1991, AD-A235470.

Vibration-Induced Allan Deviation Degradation

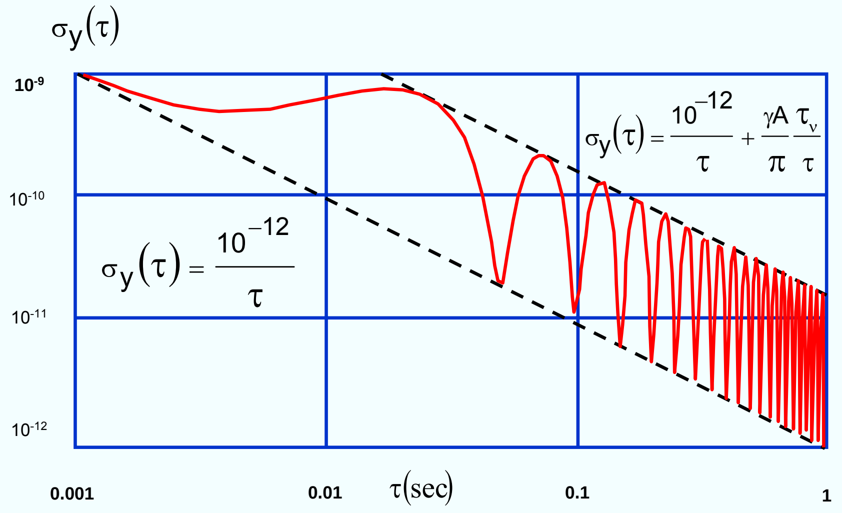

Example shown: f_v = 20, Hz A = 1.0 g along Γ, IΓI = 1 x 10^{-9}/g

4-67

Vibration modulates the frequency and, thereby, degrades the short-term stability. The typical degradation due to sinusoidal vibration varies with averaging time, as shown. Since a full sine wave averages to zero, the degradation is zero for averaging times that are integer multiples of the period of vibration. The peaks occur at averaging times that are odd multiples of half the period of vibration. The $\sigma_y(\tau)$ due to a single-frequency vibration is:

$$\sigma_y(\tau) = (\Gamma \bullet \mathbf{A}/\pi)(\tau_v/\tau)\sin^2[\pi(\tau/\tau_v)],$$

where τ_v is the period of vibration, τ is the measurement averaging time, Γ is the acceleration sensitivity vector, and **A** is the acceleration.

J. R. Vig, C. Audoin, L. S. Cutler, M. M. Driscoll, E. P. EerNisse, R. L. Filler, R. M. Garvey, W. L. Riley, R. C. Smythe, and R. D. Weglein, "Acceleration, Vibration and Shock Effects - IEEE Standards Project P1193," Proc. 1992 IEEE Frequency Control Symposium, 763-781, 1992; also, The Effects of Acceleration on Precision Frequency Sources, U. S. Army Laboratory Command Research and Development Technical Report SLCET-TR-91-3, March 1991, AD-A235470.

Vibration-Induced Phase Excursion

The phase of a vibration modulated signal is

$$\varphi(t) = 2\pi f_0 t + \left(\frac{\Delta f}{f_v}\right)\sin(2\pi f_v t)$$

When the oscillator is subjected to a sinusoidal vibration, the peak phase excursion is

$$\Delta\varphi_{peak} = \frac{\Delta f}{f_v} = \frac{(\overline{\Gamma} \bullet \overline{A})f_0}{f_v}$$

Example: if a 10 MHz, 1 x 10^{-9}/g oscillator is subjected to a 10 Hz sinusoidal vibration of amplitude 1g, the peak vibration-induced phase excursion is 1 x 10^{-3} radian. If this oscillator is used as the reference oscillator in a 10 GHz radar system, the peak phase excursion at 10GHz will be 1 radian. Such a large phase excursion can be catastrophic to the performance of many systems, such as those which employ phase locked loops (PLL) or phase shift keying (PSK).

J. R. Vig, C. Audoin, L. S. Cutler, M. M. Driscoll, E. P. EerNisse, R. L. Filler, R. M. Garvey, W. L. Riley, R. C. Smythe, and R. D. Weglein, "Acceleration, Vibration and Shock Effects - IEEE Standards Project P1193," Proc. 1992 IEEE Frequency Control Symposium, 763-781, 1992; also, The Effects of Acceleration on Precision Frequency Sources, U. S. Army Laboratory Command Research and Development Technical Report SLCET-TR-91-3, March 1991, AD-A235470.

Vibration-Induced Sidebands

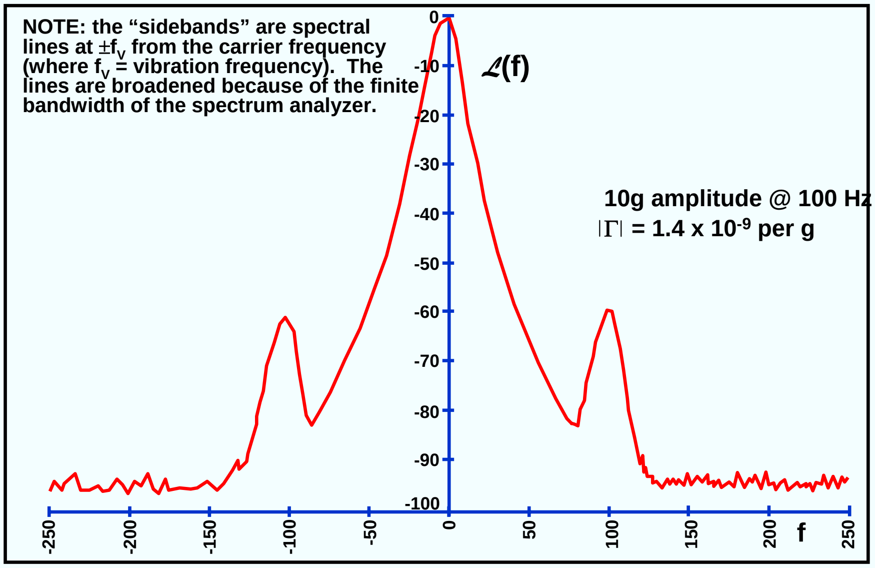

As shown in the references, for small modulation index β, i.e., $\beta \equiv \Delta f/f_v = (\Gamma \bullet \mathbf{A})f_o/f_v < 0.1$, sinusoidal vibration produces spectral lines at $\pm f_v$ from the carrier, where f_v is the vibration frequency. For an ideal sine wave, the "sidebands" are spectral lines (i.e., delta functions) not spectral densities. Most of the power is in the carrier, a small amount is in the first spectral line pair, and the higher order spectral lines are negligible. On a spectrum analyzer, the spectral lines appear to be sidebands - due to the finite bandwidth of the spectrum analyzer.

R. L. Filler, "The Acceleration Sensitivity of Quartz Crystal Oscillators: A Review," IEEE Transactions on Ultrasonics, Ferroelectrics, and Frequency Control, Vol. 35, No. 3, pp. 297-305, May 1988.

J. R. Vig, C. Audoin, L. S. Cutler, M. M. Driscoll, E. P. EerNisse, R. L. Filler, R. M. Garvey, W. L. Riley, R. C. Smythe, and R. D. Weglein, "Acceleration, Vibration and Shock Effects - IEEE Standards Project P1193," Proc. 1992 IEEE Frequency Control Symposium, 763-781, 1992; also, The Effects of Acceleration on Precision Frequency Sources, U. S. Army Laboratory Command Research and Development Technical Report SLCET-TR-91-3, March 1991, AD-A235470.

Vibration-Induced Sidebands

After Frequency Multiplication

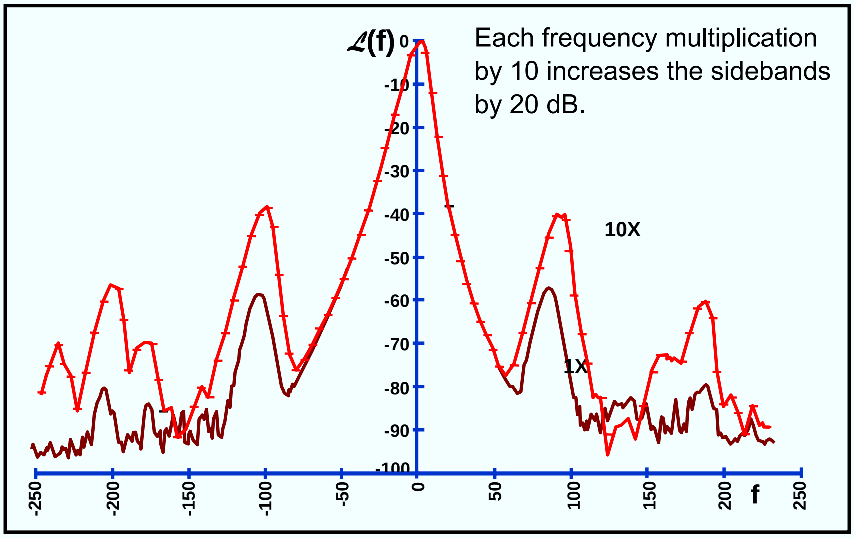

4-70

Upon frequency multiplication by a factor N, the vibrational frequency f_v is unaffected, as it is an external influence. The peak frequency change due to vibration, Δf, however, becomes

$$\Delta f = (\Gamma \bullet \mathbf{A})\, N f_0.$$

The modulation index β is therefore increased by the factor N. Expressed in decibels, frequency multiplication by a factor N increases the phase noise by 20 log N. When exposed to the same vibration, the relationship between the vibration-induced phase noise of two oscillators with the same vibration sensitivity and different carrier frequencies is

$$\mathcal{L}_B(f) = \mathcal{L}_A(f) + 20 \log (f_B/f_A),$$

where $\mathcal{L}_A(f)$ is the sideband level, in dBc/Hz (or dBc for sinusoidal vibration), of the oscillator at frequency f_A and $\mathcal{L}_B(f)$ is the sideband level of the oscillator at frequency f_B. For the same acceleration sensitivity, vibration frequency and output frequency, the sidebands are identical, whether the output frequency is obtained by multiplication from a lower frequency or by direct generation at the higher frequency. For example, when a 2×10^{-9}/g sensitivity 5 MHz oscillator's frequency is multiplied by a factor of 315 to generate a frequency of 1575 MHz, its output will contain vibration-induced sidebands which are identical to those of a 1575 MHz SAW oscillator that has the same 2×10^{-9}/g sensitivity.

R. L. Filler, "The Acceleration Sensitivity of Quartz Crystal Oscillators: A Review," IEEE Transactions on Ultrasonics, Ferroelectrics, and Frequency Control, Vol. 35, No. 3, pp. 297-305, May 1988.

J. R. Vig, C. Audoin, L. S. Cutler, M. M. Driscoll, E. P. EerNisse, R. L. Filler, R. M. Garvey, W. L. Riley, R. C. Smythe, and R. D. Weglein, "Acceleration, Vibration and Shock Effects - IEEE Standards Project P1193," Proc. 1992 IEEE Frequency Control Symposium, 763-781, 1992; also, The Effects of Acceleration on Precision Frequency Sources, U. S. Army Laboratory Command Research and Development Technical Report SLCET-TR-91-3, March 1991, AD-A235470.

Sine Vibration-Induced Phase Noise

Sinusoidal vibration produces spectral lines at $\pm f_v$ from the carrier, where f_v is the vibration frequency.

$$\mathcal{L}'(f_v) = 20 \log \left(\frac{\bar{\Gamma} \bullet \bar{A} f_0}{2 f_v} \right)$$

e.g., if $|\bar{\Gamma}| = 1 \times 10^{-9}$/g and f_0 = 10 MHz, then even if the oscillator is completely **noise free at rest**, the phase "noise" i.e., the spectral lines, due solely to a sine vibration level of 1g will be;

Vibr. freq., f_v, in Hz	$\mathcal{L}'(f_v)$, in dBc
1	-46
10	-66
100	-86
1,000	-106
10,000	-126

R. L. Filler, "The Acceleration Sensitivity of Quartz Crystal Oscillators: A Review," IEEE Transactions on Ultrasonics, Ferroelectrics, and Frequency Control, Vol. 35, No. 3, pp. 297-305, May 1988.

J. R. Vig, C. Audoin, L. S. Cutler, M. M. Driscoll, E. P. EerNisse, R. L. Filler, R. M. Garvey, W. L. Riley, R. C. Smythe, and R. D. Weglein, "Acceleration, Vibration and Shock Effects - IEEE Standards Project P1193," Proc. 1992 IEEE Frequency Control Symposium, 763-781, 1992; also, The Effects of Acceleration on Precision Frequency Sources, U. S. Army Laboratory Command Research and Development Technical Report SLCET-TR-91-3, March 1991, AD-A235470.

Random Vibration-Induced Phase Noise

Random vibration's contribution to phase noise is given by:

$$\mathcal{L}(f) = 20 \log\left(\frac{\bar{\Gamma} \bullet \bar{A} f_0}{2f}\right), \quad \text{where } |\bar{A}| = [(2)(PSD)]^{1/2}$$

e.g., if $|\bar{\Gamma}| = 1 \times 10^{-9}$/g and f_0 = 10 MHz, then even if the oscillator is completely **noise free at rest**, the phase "noise" i.e., the spectral lines, due solely to a vibration of power spectral density, PSD = 0.1 g^2/Hz will be:

Offset freq., f, in Hz	$\mathcal{L}'(f)$, in dBc/Hz
1	-53
10	-73
100	-93
1,000	-113
10,000	-133

R. L. Filler, "The Acceleration Sensitivity of Quartz Crystal Oscillators: A Review," IEEE Transactions on Ultrasonics, Ferroelectrics, and Frequency Control, Vol. 35, No. 3, pp. 297-305, May 1988.

J. R. Vig, C. Audoin, L. S. Cutler, M. M. Driscoll, E. P. EerNisse, R. L. Filler, R. M. Garvey, W. L. Riley, R. C. Smythe, and R. D. Weglein, "Acceleration, Vibration and Shock Effects - IEEE Standards Project P1193," Proc. 1992 IEEE Frequency Control Symposium, 763-781, 1992; also, The Effects of Acceleration on Precision Frequency Sources, U. S. Army Laboratory Command Research and Development Technical Report SLCET-TR-91-3, March 1991, AD-A235470.

Random-Vibration-Induced Phase Noise

Phase noise under vibration is for $\Gamma = 1 \times 10^{-9}$ per g and f = 10 MHz

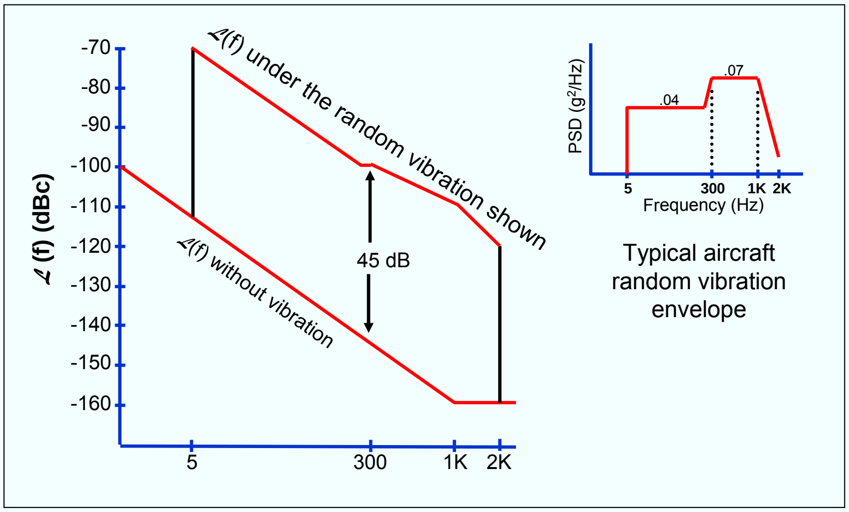

4-73

Shown above is a typical aircraft random vibration specification (power spectral density vs. vibration frequency is shown in the upper right portion of the figure) and the resulting vibration-induced phase noise degradation. The degradation of 45 dB can produce severe system performance degradation.

R. L. Filler, "The Acceleration Sensitivity of Quartz Crystal Oscillators: A Review," IEEE Transactions on Ultrasonics, Ferroelectrics, and Frequency Control, Vol. 35, No. 3, pp. 297-305, May 1988.

Acceleration Sensitivity vs. Vibration Frequency

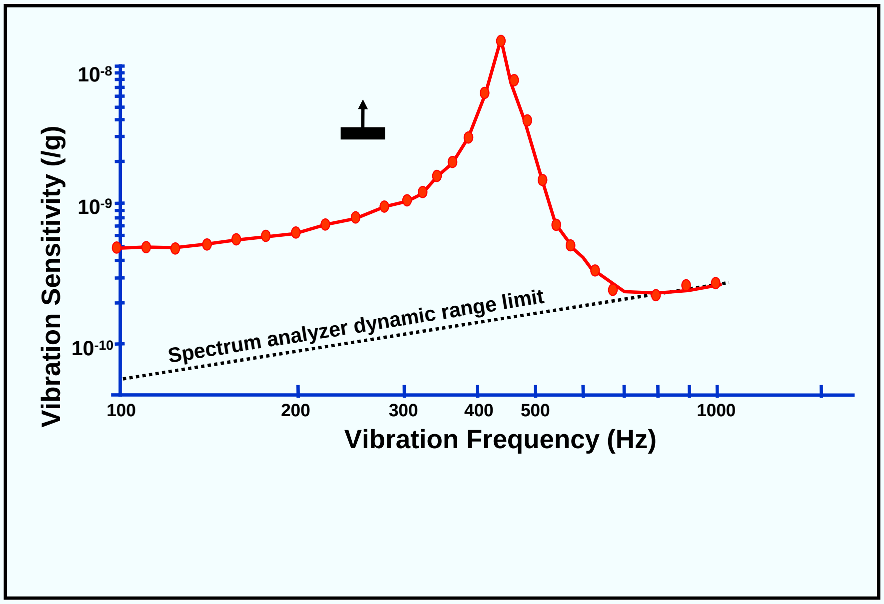

4-74

The acceleration sensitivity, Γ, can be calculated from the vibration induced sidebands. In an ideal oscillator, Γ vs. f_v would be constant, but real oscillators exhibit resonances. In the above example, the resonance at 424 Hz resulted in a 17-fold increase in Γ. The preferred test method includes measurement of Γ at multiple vibration frequencies in order to reveal resonances.

MIL-PRF-55310 requires that “Measurements shall be made at least 5 equally spaced acceleration levels between 20 percent of the maximum and the maximum specified.”

J. R. Vig, C. Audoin, L. S. Cutler, M. M. Driscoll, E. P. EerNisse, R. L. Filler, R. M. Garvey, W. L. Riley, R. C. Smythe, and R. D. Weglein, "Acceleration, Vibration and Shock Effects - IEEE Standards Project P1193," Proc. 1992 IEEE Frequency Control Symposium, 763-781, 1992; also, The Effects of Acceleration on Precision Frequency Sources, U. S. Army Laboratory Command Research and Development Technical Report SLCET-TR-91-3, March 1991, AD-A235470.

The complete MIL-PRF-55310 is available on the Internet via a link from <http:\\www.ieee.org/uffc/fc>, or directly, from <http://www.dscc.dla.mil/Programs/MilSpec/ListDocs.asp?BasicDoc=MIL-PRF-55310>

Copies of MIL-PRF-55310 are also available by mail from: Military Specifications and Standards, Bldg. 4D, 700 Robbins Avenue, Philadelphia, PA 19111-5094, USA. Customer Service telephone: (215) 697-2667/2179; Telephone Order Entry System (requires a touch tone telephone and a customer number) (215) 697-1187 thru 1195.

Acceleration Sensitivity of Quartz Resonators

Resonator acceleration sensitivities range from the low parts in 10^{10} per g for the best commercially available SC-cuts, to parts in 10^7 per g for tuning-fork-type watch crystals. When a wide range of resonators were examined: AT, BT, FC, IT, SC, AK, and GT-cuts; 5 MHz 5th overtones to 500 MHz fundamental mode inverted mesa resonators; resonators made of natural quartz, cultured quartz, and swept cultured quartz; numerous geometries and mounting configurations (including rectangular AT-cuts); nearly all of the results were within a factor of three of $1x10^{-9}$ per g. On the other hand, the fact that a few resonators have been found to have sensitivities of less than $1x10^{-10}$ per g indicates that the observed acceleration sensitivities are not due to any inherent natural limitations.

Theoretical and experimental evidence indicates that the major variables yet to be controlled properly are the mode shape and location (i.e., the amplitude of vibration distribution), and the strain distribution associated with the mode of vibration. Theoretically, when the mounting is completely symmetrical with respect to the mode shape, the acceleration sensitivity can be zero, but tiny changes from this ideal condition can cause a significant sensitivity. Until the acceleration sensitivity problem is solved, acceleration compensation and vibration isolation can provide lower than $1x10^{-10}$ per g, for a limited range of vibration frequencies, and at a cost.

J. T. Stewart, P. Morley, & D. S. Stevens, “Theoretical and Experimental Results for the Acceleration Sensitivity of Rectangular Crystal resonators,” Proc. 1999 IEEE Int’l Frequency Control Symposium, 1999.

B. J. Lwo & H. F. Tiersten, "Calculation of the Optimal Clip Dimensioning to Minimize the Influence of Fabrication Imperfections on the Acceleration Sensitivity of SC-cut Quartz Resonators...," Proc. IEEE Int'l Frequency Control Symp., pp. 165-171, 1994.

E. P. EerNisse, R. W. Ward and O. L. Wood, "Acceleration-Induced Frequency Shifts in Quartz Resonators," Proc. 43rd Ann. Symposium on Frequency Control, pp. 388-395, 1989, IEEE Cat. No. 89CH2690-6

Phase Noise Degradation Due to Vibration

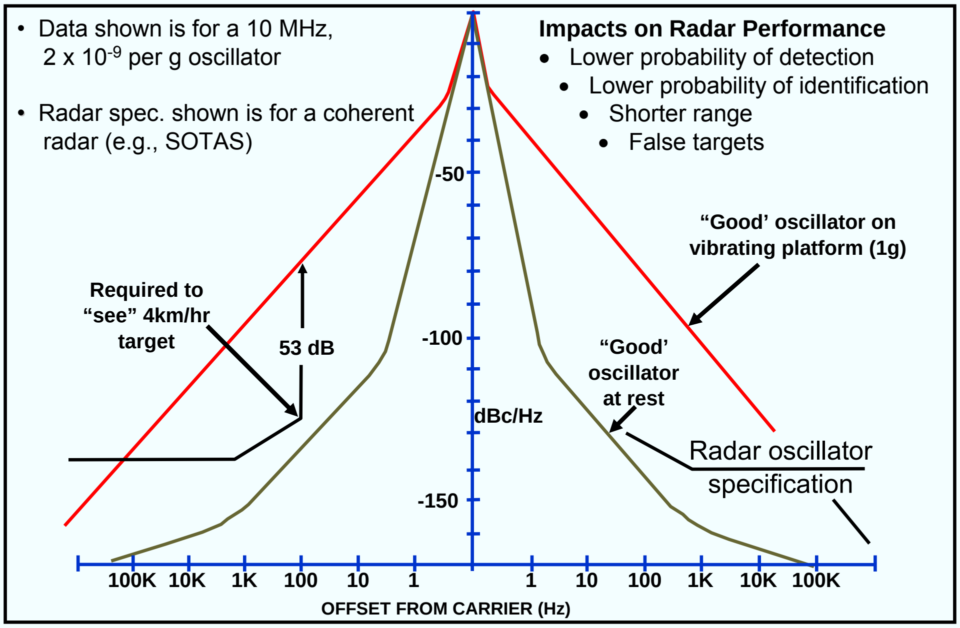

At X-band, for example, low phase noise 70 Hz from the carrier is required to detect slowly moving (4 km/h) objects. Shown above is an example of the phase noise degradation due to vibration - showing phase noise vs. offset frequency from the carrier. The phase noise degradation was 53dB at 70 Hz from the carrier. In the example on the next page, a degradation > ~25 dB causes the radar to have a zero probability of detection for 4 km/hr objects. Therefore, with the degradation shown above, the radar was blind to slow moving objects.

Coherent Radar Probability of Detection

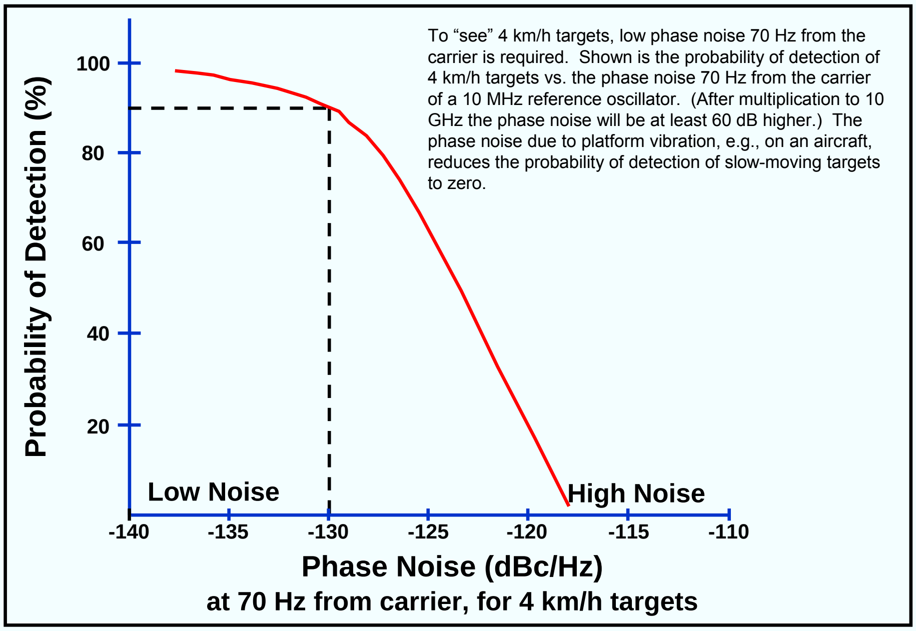

4-77

Shown above is the probability of detection vs. reference oscillator phase noise for an X-band (~10 GHz) coherent radar system. To detect a slowly moving (4km/h) object with a 90% probability of detection (as was the requirement for one developmental airborne system), the phase noise requirement had to be -130 dBc/Hz at 70 Hz from the carrier frequency. On a quiet, stationary platform, the phase noise requirement is well within the state of the art. However, on an airborne platform, the vibration of the aircraft degrades the phase noise (see previous page) to the point where the probability of detection is zero. To meet the requirements while in an aircraft, the oscillator's acceleration sensitivity had to be << 1x 10^{-10} per g.

Vibration Isolation

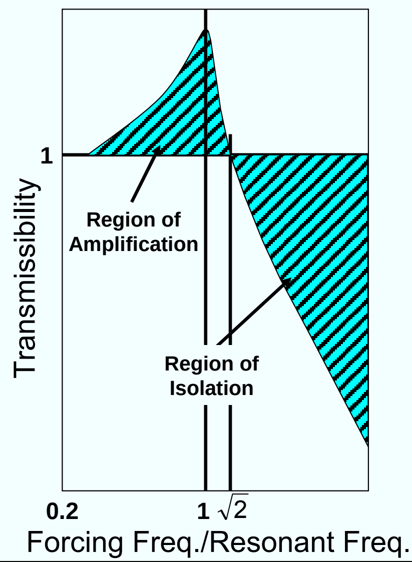

Limitations

- Poor at low frequencies
- Adds size, weight and cost
- Ineffective for acoustic noise

4-78

A simple vibration isolation system is itself a resonant structure. It can be effective at high frequencies (along one direction), but it amplifies the vibration at, and below its resonant frequency. Moreover, the isolation system's dimensions must accommodate large displacements at low frequencies and high accelerations.

For sinusoidal vibration, the vibration displacement $d = d_o \sin 2\pi ft$, and the acceleration **a** $= -d_o(2\pi f)^2 \sin 2\pi ft$, where d_o is the peak displacement and f is the vibration frequency. Therefore, $d_o = 0.50\ G/f^2$ meters, peak-to-peak, where G is the acceleration in units of g. For example, the peak-to-peak displacement at 1 Hz and 1 g is 0.5 meters.

Acoustic noise can be especially troublesome in certain applications. For example, when an extremely low noise oscillator was required in an aircraft radar application, after the system designers built a three-level vibration isolation system to isolate the oscillator from the vibration of the aircraft, they discovered that the isolation system failed to deliver the expected phase noise of the oscillator because the isolation system failed to deal with the acoustic noise in the aircraft; i.e., the isolation system was effective in isolating the oscillator from the vibrations of the airframe, but it was ineffective in blocking the intense sound waves that impinged on the oscillator.

J. R. Vig, C. Audoin, L. S. Cutler, M. M. Driscoll, E. P. EerNisse, R. L. Filler, R. M. Garvey, W. L. Riley, R. C. Smythe, and R. D. Weglein, "Acceleration, Vibration and Shock Effects - IEEE Standards Project P1193," Proc. 1992 IEEE Frequency Control Symposium, 763-781, 1992; also, The Effects of Acceleration on Precision Frequency Sources, U. S. Army Laboratory Command Research and Development Technical Report SLCET-TR-91-3, March 1991, AD-A235470.

Vibration Compensation

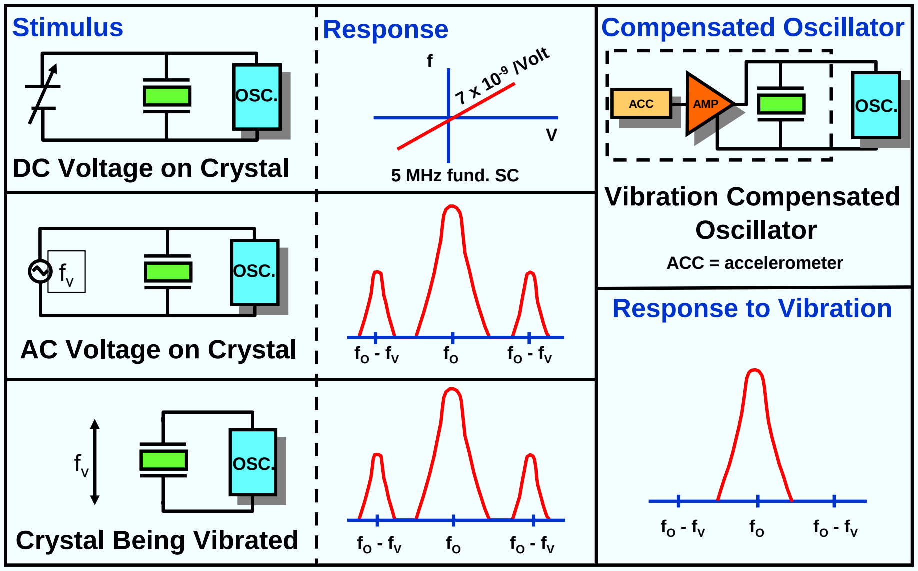

4-79

The frequency of a doubly rotated resonator, such as the SC-cut, varies linearly with a voltage applied to the resonator's electrodes. (The frequency of a singly rotated, i.e., $\phi = 0$, resonator, such as the AT-cut, does not vary with voltage.) For example, the voltage sensitivity of a 5 MHz fundamental mode SC-cut resonator is 7×10^{-9} per volt, as shown in the upper middle above.

Therefore, when an AC voltage of frequency f_v is applied to the electrodes, sidebands (i.e., spectral lines) at $\pm f_v$ from the carrier frequency f_o are generated, as shown above, in the middle. By adjusting the magnitude of the AC voltage, the sidebands can be made identical to the sidebands produced by sinusoidal vibration at frequency f_v. When the vibration and AC voltage are applied simultaneously, the amplitude and phase of the AC voltage can be adjusted so as to cancel the vibration induced sidebands.

A 60 dB suppression of the sidebands, at a single frequency, has been demonstrated. An accelerometer sensed the vibration, and the output signal from the accelerometer was applied to the resonator's electrodes after calibration of the output's phase and amplitude. Away from the frequency of optimum suppression, the suppression degraded due to frequency dependent phase shifts in the (simple) circuitry used, and mechanical resonances in the setup.

V. J. Rosati and R. L. Filler, "Reduction of the Effects of Vibration on SC-Cut Quartz Crystal Oscillators," Proc. 35th Annual Symposium on Frequency Control, pp. 117-121, 1981, AD-A110870

Vibration Sensitivity Measurement System

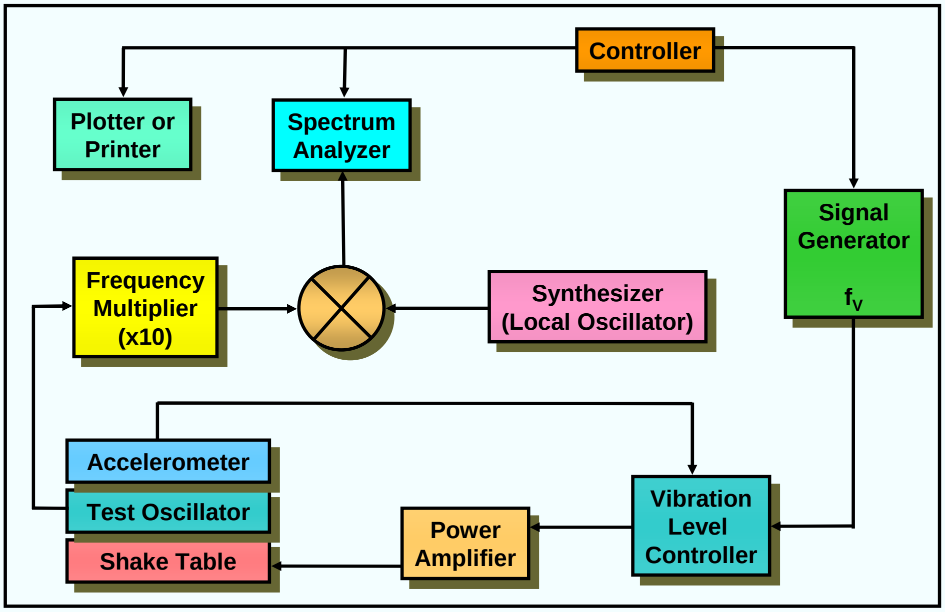

4-80

One method of measuring Γ is illustrated above. From the vibration induced sidebands, one can calculate Γ via the equation

$$\mathcal{L}(f) = 20 \log (\Gamma \bullet \mathbf{A} f_0 / 2f_v)$$

from which it follows that

$$\Gamma_i = (2f_v / A_i f_0) 10^B, \text{ where } B = \mathcal{L}_i(f_v)/20$$

where Γ_i and A_i are the components of the acceleration sensitivity vector and of the acceleration, respectively, in the (unit vector) i direction. Measurements along three mutually perpendicular axes characterize Γ, which becomes

$$\mathbf{\Gamma} = \Gamma_i \mathbf{i} + \Gamma_j \mathbf{j} + \Gamma_k \mathbf{k}$$

The local oscillator is used to mix the carrier frequency down to the range of the spectrum analyzer. If the local oscillator is not modulated, the relative sideband levels are unchanged by mixing. The frequency multiplier is used to overcome dynamic range limitations of the spectrum analyzer, using the "20 log N" enhancement discussed previously. The measured sideband levels must be adjusted for the multiplication factor prior to insertion into the above equation. (The equation is valid only if $\beta < 0.1$.)

The illustration was provided by R.L. Filler, private communication, circa 1988

J. R. Vig, C. Audoin, L. S. Cutler, M. M. Driscoll, E. P. EerNisse, R. L. Filler, R. M. Garvey, W. L. Riley, R. C. Smythe, and R. D. Weglein, "Acceleration, Vibration and Shock Effects - IEEE Standards Project P1193," Proc. 1992 IEEE Frequency Control Symposium, 763-781, 1992; also, The Effects of Acceleration on Precision Frequency Sources, U. S. Army Laboratory Command Research and Development Technical Report SLCET-TR-91-3, March 1991, AD-A235470.

Shock

The frequency excursion during a shock is due to the resonator's stress sensitivity. The magnitude of the excursion is a function of resonator design, and of the shock induced stresses on the resonator (resonances in the mounting structure will amplify the stresses.) The permanent frequency offset can be due to: shock induced stress changes, the removal of (particulate) contamination from the resonator surfaces, and changes in the oscillator circuitry. Survival under shock is primarily a function of resonator surface imperfections. Chemical-polishing-produced scratch-free resonators have survived shocks up to 36,000 g in air gun tests, and have survived the shocks due to being fired from a 155 mm howitzer (16,000 g, 12 ms duration).

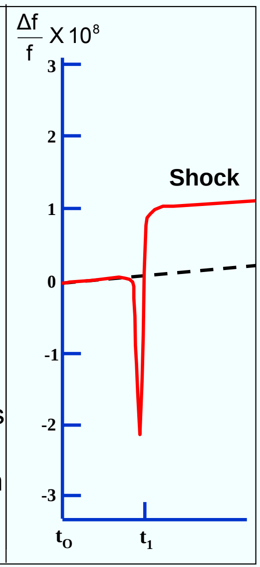

4-81

See chapter 5 for further information about the etching and chemical polishing of quartz crystals.

The shock testing of a frequency source generally consists of measuring the frequency or phase of the source before and after exposing the device to the specified shock. The phase deviation resulting from the shock (which is the time integral of the fractional frequency change) can provide useful information about the frequency excursion during the shock (including the possible cessation of operation).

R. L. Filler, L. J. Keres, T. M. Snowden, and J. R. Vig, "Ceramic Flatpack Enclosed AT and SC-cut Resonators," Proc. 1980 IEEE Ultrasonic Symp., pp. 819-824, 1980.

J. R. Vig, J. W. LeBus, and R. L. Filler, "Chemically Polished Quartz," Proc. of the 31st Ann. Symp. On Frequency Control, pp. 131-143, 1977

Radiation-Induced Frequency Shifts

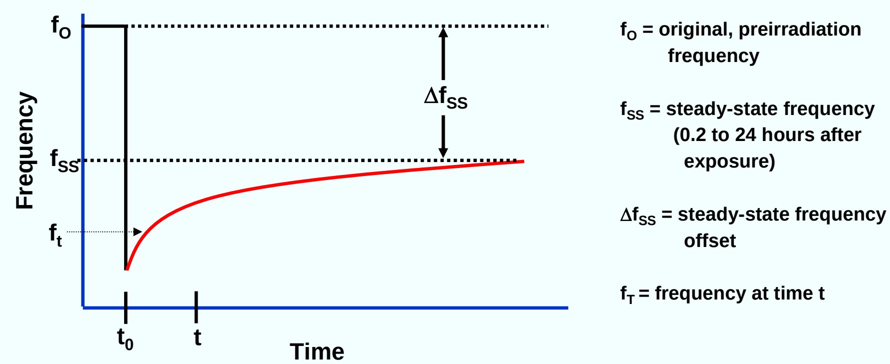

Δf_{SS}/rad* = { 10^{-11} for natural quartz (and R increase can stop the oscillation); 10^{-12} for cultured quartz; 10^{-13} for swept cultured quartz

* for a 1 megarad dose (the coefficients are dose dependent)

Idealized frequency vs. time behavior for a quartz resonator following a pulse of ionizing radiation.

4-82

The above illustration shows a crystal oscillator's idealized frequency response due to a pulse of ionizing radiation. The response consists of two parts. Initially, there is a transient frequency change that is due primarily to the thermal-transient effect caused by the sudden deposition of energy into the resonator. This effect is a manifestation of the dynamic *f* vs. *T* effect discussed earlier (see “Warmup of AT- and SC-cut Resonators”). The transient effect is absent in SC-cut resonators made of high purity quartz.

In the second part of the response, after steady state is reached, there is a permanent frequency offset that is a function of the radiation dose and the nature of the crystal unit. The frequency change versus dose is nonlinear, the change per rad being much larger at low doses than at large doses. At doses above 1 kilorad (SiO_2), the rate of frequency change with dose is quartz-impurity-defect dependent. For example, at a 1 megarad dose, the frequency change can be as large as 10 ppm when the crystal unit is made from natural quartz; it is typically 1 to a few ppm when the crystal is made from cultured quartz, and it can be as small as 0.02 ppm when the crystal is made from swept cultured quartz.

“The Effects of Ionizing and Particle Radiation on Precision Frequency Sources (Proposal for IEEE Standards Project P1193),” Proc. 1992 IEEE Frequency Control Symposium, pp. 798-806, 1992.

1193-1994 IEEE Guide for Measurement of Environmental Sensitivities of Standard Frequency Generators.

King, J. C., and Koehler, D. R., “Radiation Effects on Resonators” in: *Precision Frequency Control,* Vol. 2 (E. A. Gerber and A. Ballato, eds.), Academic Press, New York, pp. 147-159, 1985.

Effects of Repeated Radiations

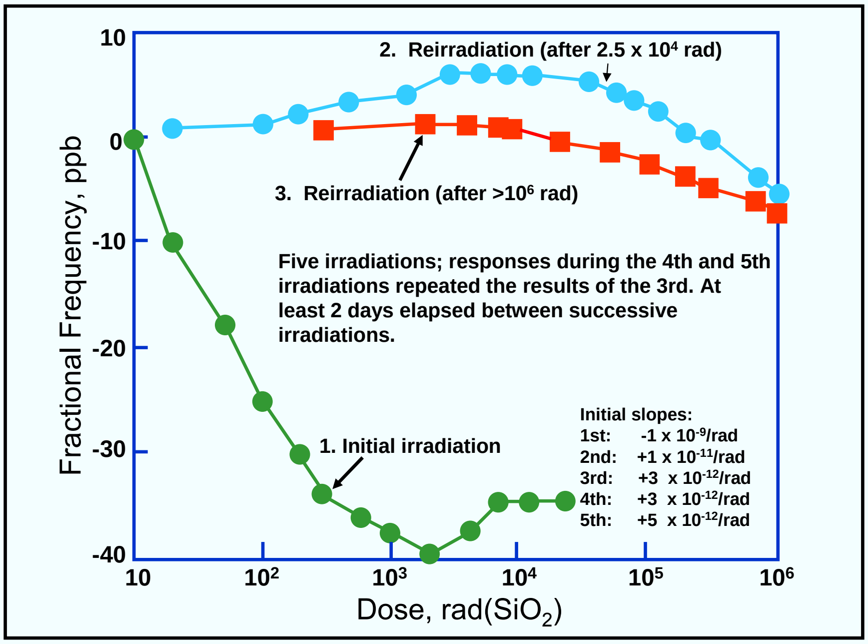

4-83

In the experiments described in the reference, irradiation with X-rays and gamma rays from a cobalt-60 source gave similar results, thus confirming that a “rad is a rad”. The initial irradiations resulted in negative shifts, subsequent irradiations resulted in smaller shifts. The frequency changes vs. time for hours to days after the irradiations significantly exceeded the pre-irradiation aging rates. Higher doses generally resulted in higher increases in aging rates.

L. J. Palkuti and Q. T. Truong, "An X-Ray Irradiation System for Total-Dose Testing of Quartz Resonators," Proc. 38th Annual Symposium on Frequency Control, pp. 55-62, 1984, AD-A217381.

Radiation Induced Δf vs. Dose and Quartz Type

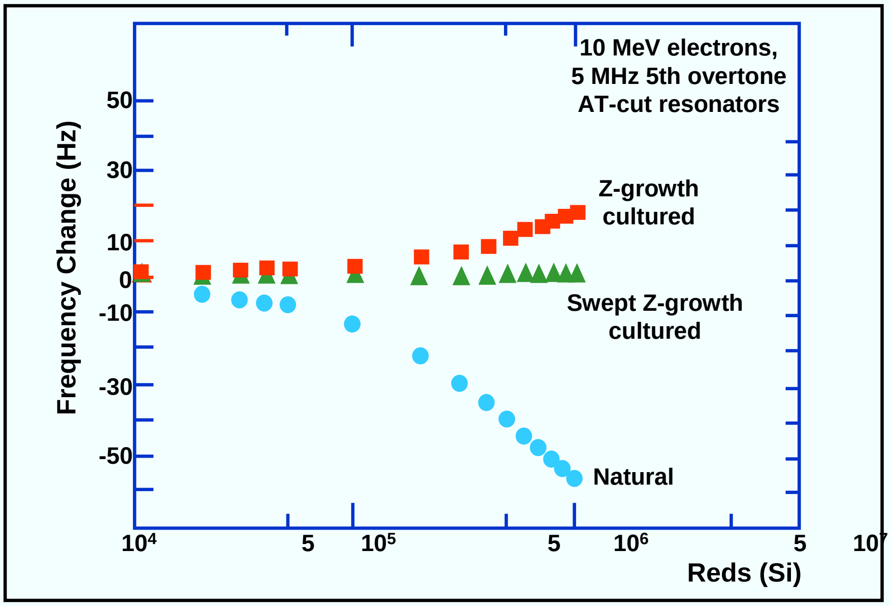

4-84

The steady-state frequency shifts due to ionizing radiation are due to radiation caused changes at impurity defects. The defect of major concern in quartz is the substitutional Al^{3+} defect with its associated interstitial charge compensator, which can be an H^+, Li^+, or Na^+ ion, or a hole. This defect substitutes for a Si^{4+} in the quartz lattice (see chapter 5). Radiation can result in a change in the position of weakly bound compensators, which changes the elastic constants of quartz and thereby leads to a frequency change. The movement of ions also results in a decrease in the crystal's Q, i.e., in an increase in the crystal's equivalent series resistance, especially upon exposure to a pulse of ionizing radiation. If the oscillator's gain margin is insufficient, the increased resistance can stop the oscillation for periods lasting many seconds.

B. R. Capone, A. Kahan, R. N. Brown, and J. R. Buckmelter, "Quartz Crystal Radiation Effects," IEEE Trans. Nuclear Sci., NS-17, pp. 217-221, 1970.

J. C. King and D. R. Koehler, Radiation Effects on Resonators. In: *Precision Frequency Control,* Vol. 2 (E. A. Gerber and A. Ballato, eds.), Academic Press, New York, pp. 147-159, 1985.

J. J. Suter, et al., “The Effects of Ionizing and Particle Radiation on Precision Frequency Sources,” *Proc. 1992 IEEE Frequency Control Symposium,* IEEE Cat. No. 92CH3083-3, 1992.

J. C. King and H. H. Sander, “Rapid Annealing of Frequency Change in High Frequency Crystal Resonators Following Pulsed X-irradiation at Room Temperature,” *Proc. 27th Ann. Symp. Frequency Control,* pp. 117-119, NTIS Accession No. AD-771042, 1973.

R. E. Paradysz, and W. L. Smith, “Crystal Controlled Oscillators for Radiation Environments,” *Proc. 27th Ann. Symp. Frequency Control,* pp. 120-123, NTIS Accession No. AD-771042, 1973.

Annealing of Radiation Induced f Changes

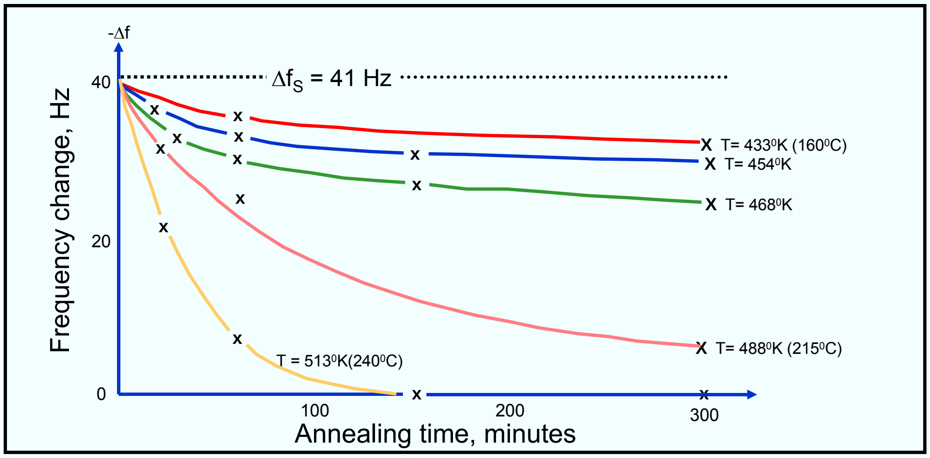

- For a 4 MHz AT-cut resonator, X-ray dose of 6 x 10^6 rads produced Δf = 41 Hz.
- Activiation energies were calculated from the temperature dependence of the annealing curves. The experimental results can be reproduced by two processes, with activation energies $E_1 = 0.3 \pm 0.1$ eV and $E_2 = 1.3 \pm 0.3$eV.
- Annealing was complete in less than 3 hours at > 240^0C.

P. Freymuth and G. Sauerbrey, "Ausheilung von Bestrahlungsschaden in Quarz- Schwingkristallen," J. Phys. Chem. Solids, Pergamon Press, Vol. 24, pp. 151-155, 1963.

Transient Δf After a Pulse of γ Radiation

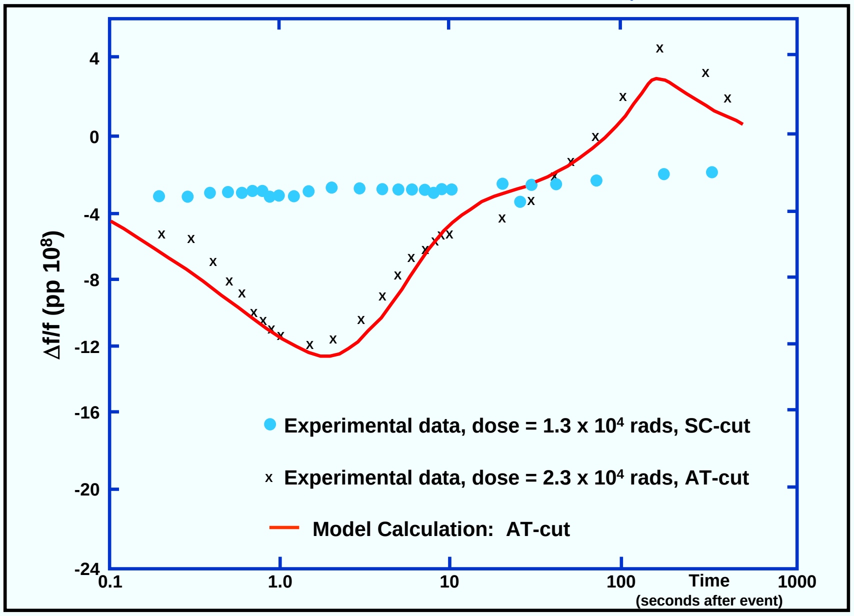

4-86

J. C. King and D. R. Koehler, "Radiation Effects on Resonators," in E. A. Gerber and A. Ballato, Precision Frequency Control, Vol. 1, pp. 147-159, Academic Press, 1985.

J. C. King and H. H. Sander, "Rapid Annealing of Frequency Change in High Frequency Crystal Resonators Following Pulsed X-irradiation at Room Temperature," *Proc. 27th Ann. Symp. Frequency Control,* pp. 117-119, NTIS Accession No. AD-771042, 1973.

R. E. Paradysz, and W. L. Smith, "Crystal Controlled Oscillators for Radiation Environments," *Proc. 27th Ann. Symp. Frequency Control,* pp. 120-123, NTIS Accession No. AD-771042, 1973.

Effects of Flash X-rays on R_S

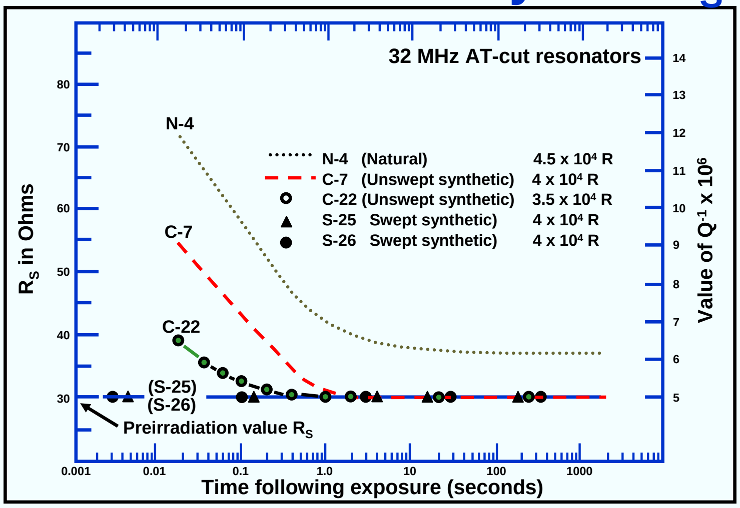

The curves show the series resonance resistance, R_S, vs. time following a 4×10^4 rad pulse. Resonators made of swept quartz show no change in R_S from the earliest measurement time (1 ms) after exposure, at room temperature. Large increases in R_S (i.e., large decrease in the Q) will stop the oscillation.

4-87

Ionizing radiation changes a crystal oscillator's frequency primarily because of changes the radiation produces in the crystal unit (also see chapter 5). Under certain conditions, the radiation will also produce an increase in the crystal unit's equivalent series resistance. The resistance increase can be large enough to stop the oscillation when the oscillator is not radiation hardened.

A high level pulse of ionizing radiation will produce photocurrents in the circuit which result in a momentary cessation of oscillation, independent of the type of quartz used in the resonator. In oscillators using properly designed oscillator circuitry and resonators made of swept quartz, the oscillator recovers within 15 µs after exposure.

The energy band gap of quartz is ~9 eV; it is an insulator, however, a pulse of ionizing radiation (x-rays, γ-rays, high energy particles) creates electrons and holes, and these result in a momentary conductivity that lasts ~5 to 30 ns after the pulse. In addition, the radiation induced electrons and holes lead to a freeing of interstitial H^+, Li^+ and Na^+ which results in additional conductivity. The conductivity results in losses, i.e., a drop in the resonator's Q.

J. C. King and H. H. Sander, "Transient Change in Q and Frequency of AT-Cut Quartz Resonators Following Exposure to Pulse X-Rays," IEEE Trans. Nucl. Sci., NS-20, pp. 117-125, 1973.

R. E. Paradysz, and W. L. Smith, "Crystal Controlled Oscillators for Radiation Environments," *Proc. 27th Ann. Symp. Frequency Control,* pp. 120-123, NTIS Accession No. AD-771042, 1973.

Frequency Change due to Neutrons

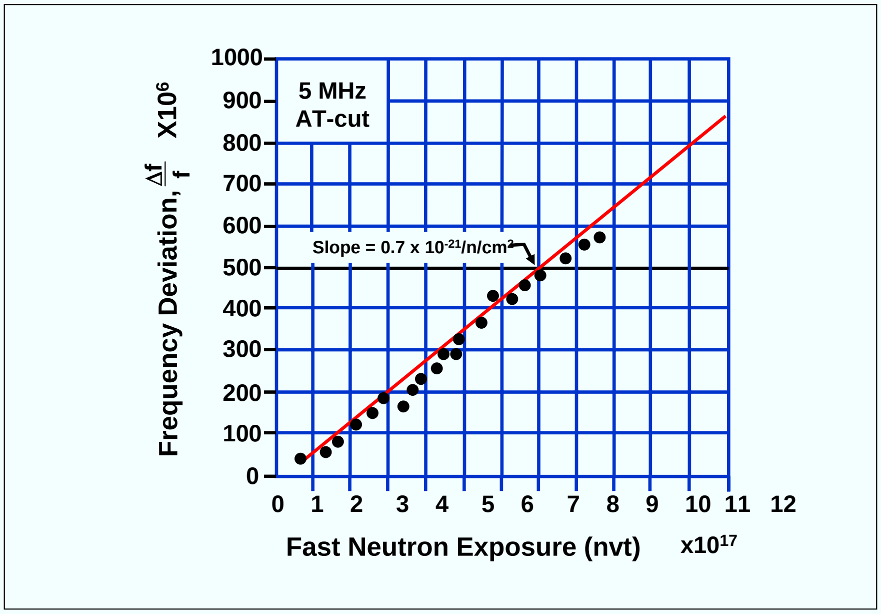

4-88

When a fast neutron hurtles into a crystal lattice and collides with an atom, it is scattered like a billiard ball. A single such neutron can produce numerous vacancies, interstitials, and broken interatomic bonds (see next page). The effect of this "displacement damage" on oscillator frequency is dependent primarily upon the neutron fluence (and not on the type of quartz). The frequency of oscillation increases nearly linearly with neutron fluence at rates of: 8×10^{-21} neutrons per square centimeter (n/cm^2) at a fluence range of 10^{10} to 10^{12} n/cm^2, $5 \times 10^{-21}/n/cm^2$ at 10^{12} to 10^{13} n/cm^2, and $0.7 \times 10^{-21}/n/cm^2$ at 10^{17} to 10^{18} n/cm^2.

J. C. King and D. B. Fraser, "Effects of Reactor Irradiation on Thickness Shear Crystal Resonators," Proc. 16th Annual Symposium on Frequency Control, pp. 8-31, 1962, AD-285086.

T. M. Flanagan & T. F. Wrobel, “Radiation Effects in Swep-Synthetic Quartz,” IEEE Trans. Nuclear Science, vol. NS-16, pp. 130-137, Dec. 1969

W. Primak, “Extrusion of Quartz on Ion Bombardment: Further Evidence for Radiation-Induced Stress Relaxation of the Silica Network,” Phys. Rev. B, vol. 14, pp. 4679-4686, 1976.

Neutron Damage

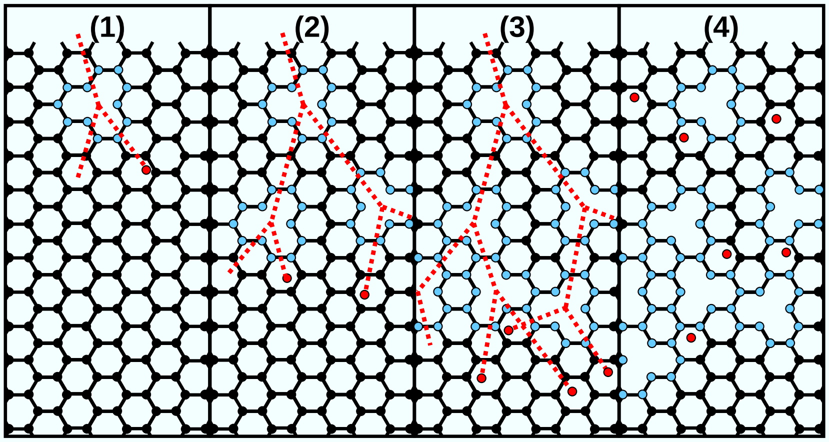

A fast neutron can displace about 50 to 100 atoms before it comes to rest. Most of the damage is done by the recoiling atoms. Net result is that each neutron can cause numerous vacancies and interstitials.

4-89

Shown above is the typical sequence of events when an energetic neutron strikes a crystal. In (1), a neutron has arrived and has dislodged a single atom. The (2), (3) and (4) drawings show how the process builds up and ends, with both the neutron and the recoiling atoms dislodging further atoms. The end result is a number of vacant sites and interstitial atoms.

F. Seitz and E. P. Wigner, “The Effects of Radiation on Solids,” Scientific American, pp. 76-84, August 1956.

Summary - Steady-State Radiation Results

- Dose vs. frequency change is nonlinear; frequency change per rad is larger at low doses.
- At doses > 1 kRad, frequency change is quartz-impurity dependent. The ionizing radiation produces electron-hole pairs; the holes are trapped by the impurity Al sites while the compensating cation (e.g., Li^+ or Na^+) is released. The freed cations are loosely trapped along the optic axis. The lattice near the Al is altered, the elastic constant is changed; therefore, the frequency shifts. Ge impurity is also troublesome.
- At a 1 MRad dose, frequency change ranges from pp 10^{11} per rad for natural quartz to pp 10^{14} per rad for high quality swept quartz.
- Frequency change is negative for natural quartz; it can be positive or negative for cultured and swept cultured quartz.
- Frequency change saturates at doses >> 10^6 rads.
- Q degrades upon irradiation if the quartz contains a high concentration of alkali impurities; Q of resonators made of properly swept cultured quartz is unaffected.
- High dose radiation can also rotate the f vs. T characteristic.
- Frequency change anneals at T > 240°C in less than 3 hours.
- Preconditioning (e.g., with doses > 10^5 rads) reduces the high dose radiation sensitivities upon subsequent irradiations.
- At < 100 rad, frequency change is not well understood. Radiation induced stress relief & surface effects (adsorption, desorption, dissociation, polymerization and charging) may be factors.

See also “Ions in Quartz - Simplified Model,” “Aluminum Associated Defects,” and “Sweeping” in Chapter 5.

T. M. Flanagan, R. E. Leadon and D. L. Shannon, "Evaluation of Mechanisms for Low-Dose Frequency Shifts in Crystal Oscillators," Proc. 40th Ann. Symp. on Frequency Control, pp. 127-133, 1986, IEEE Cat. No. 86CH2330-9

J. C. King and D. R. Koehler, Radiation Effects on Resonators. In: *Precision Frequency Control,* Vol. 2 (E. A. Gerber and A. Ballato, eds.), Academic Press, New York, pp. 147-159, 1985.

Summary - Pulse Irradiation Results

- For applications requiring circuits hardened to pulse irradiation, quartz resonators are the least tolerant element in properly designed oscillator circuits.
- Resonators made of unswept quartz or natural quartz can experience a large increase in R_s following a pulse of radiation. The radiation pulse can stop the oscillation.
- Natural, cultured, and swept cultured AT-cut quartz resonators experience an initial negative frequency shift immediately after exposure to a pulse of X-rays (e.g., 10^4 to 10^5 Rad of flash X-rays), $\Delta f/f$ is as large as -3ppm at 0.02sec after burst of 10^{12} Rad/sec.
- Transient f offset anneals as $t^{-1/2}$; the nonthermal-transient part of the f offset is probably due to the diffusion and retrapping of hydrogen at the Al^{3+} trap.
- Resonators made of properly swept quartz experience a negligibly small change in R_s when subjected to pulsed ionizing radiation (therefore, the oscillator circuit does not require a large reserve of gain margin).
- SC-cut quartz resonators made of properly swept high Q quartz do not exhibit transient frequency offsets following a pulse of ionizing radiation.
- Crystal oscillators will stop oscillating during an intense pulse of ionizing radiation because of the large prompt photoconductivity in quartz and in the transistors comprising the oscillator circuit. Oscillation will start up within 15µsec after a burst if swept quartz is used in the resonator and the oscillator circuit is properly designed for the radiation environment.

-

Summary - Neutron Irradiation Results

- When a fast neutron (~MeV energy) hurtles into a crystal lattice and collides with an atom, it is scattered like a billiard ball. The recoiling atom, having an energy (~10^4 to 10^6 eV) that is much greater than its binding energy in the lattice, leaves behind a vacancy and, as it travels through the lattice, it displaces and ionizes other atoms. A single fast neutron can thereby produce numerous vacancies, interstitials, and broken interatomic bonds. Neutron damage thus changes both the elastic constants and the density of quartz. Of the fast neutrons that impinge on a resonator, most pass through without any collisions, i.e., without any effects on the resonator. The small fraction of neutrons that collide with atoms in the lattice cause the damage.
- Frequency increases approximately linearly with fluence. For AT- and SC-cut resonators, the slopes range from +0.7 x 10^{-21}/n/cm^2, at very high fluences (10^{17} to 10^{18}n/cm^2) to 5 x 10^{-21}/n/cm^2 at 10^{12} to 10^{13}n/cm^2, and 8 x 10^{-21}/n/cm^{2}at 10^{10} to 10^{12}n/cm^2. Sensitivity probably depends somewhat on the quartz defect density and on the neutron energy distribution. (Thermonuclear neutrons cause more damage than reactor neutrons.)
- Neutron irradiation also rotates the frequency vs. temperature characteristic.
- When a heavily neutron irradiated sample was baked at 500°C for six days, 90% of the neutron-induced frequency shift was removed (but the 10% remaining was still 93 ppm).

-

Other Effects on Stability

- **Electric field -** affects doubly-rotated resonators; e.g., a voltage on the electrodes of a 5 MHz fundamental mode SC-cut resonator results in a $\Delta f/f = 7 \times 10^{-9}$ per volt. The voltage can also cause sweeping, which can affect the frequency (of all cuts), even at normal operating temperatures.
- **Magnetic field -** quartz is diamagnetic, however, magnetic fields can induce Eddy currents, and will affect magnetic materials in the resonator package and the oscillator circuitry. Induced ac voltages can affect varactors, AGC circuits and power supplies. Typical frequency change of a "good" quartz oscillator is $<<10^{-10}$ per gauss.
- **Ambient pressure (altitude) -** deformation of resonator and oscillator packages, and change in heat transfer conditions affect the frequency.
- **Humidity -** can affect the oscillator circuitry, and the oscillator's thermal properties, e.g., moisture absorbed by organics can affect dielectric constants.
- **Power supply voltage, and load impedance -** affect the oscillator circuitry, and indirectly, the resonator's drive level and load reactance. A change in load impedance changes the amplitude or phase of the signal reflected into the oscillator loop, which changes the phase (and frequency) of the oscillation. The effects can be minimized by using a (low noise) voltage regulator and buffer amplifier.
- **Gas permeation -** stability can be affected by excessive levels of atmospheric hydrogen and helium diffusing into "hermetically sealed" metal and glass enclosures (e.g., hydrogen diffusion through nickel resonator enclosures, and helium diffusion through glass Rb standard bulbs).

4-93

Ambient pressure change (as during an altitude change) can change a crystal oscillator's frequency if the pressure change produces a deformation of the crystal unit's or the oscillator's enclosure (thus changing stray capacitances and stresses). The pressure change can also affect the frequency indirectly through a change in heat-transfer conditions inside the oscillator. Humidity changes can also affect the heat-transfer conditions. In addition, moisture in the atmosphere will condense on surfaces when the temperature falls below the dew point, and can permeate materials such as epoxies and polyimides, and thereby affect the properties (e.g., conductivities and dielectric constants) of the oscillator circuitry. The frequency of a properly designed crystal oscillator changes less than 5×10^{-9} when the environment changes from one atmosphere of air to a vacuum. The medium and long term stability of some oscillators can be improved by controlling the pressure and humidity around the oscillators.

Electric fields can change the frequency of a crystal unit. An ideal AT-cut is not affected by a dc voltage on the crystal electrodes, but "doubly rotated cuts," such as the SC-cut, are affected. For example, the frequency of a 5-MHz fundamental mode SC-cut crystal changes 7×10^{-9} per volt. Direct-current voltages on the electrodes can also cause sweeping, which can affect the frequencies of all cuts.

Power-supply and load-impedance changes affect the oscillator circuitry and, indirectly, the crystal's drive level and load reactance. A change in load impedance changes the amplitude or phase of the signal reflected into the oscillator loop, which changes the phase (and frequency) of the oscillation. The effects can be minimized through voltage regulation and the use of buffer amplifiers. The frequency of a "good" crystal oscillator changes less than 5×10^{-10} for a 10% change in load impedance. The typical sensitivity of a high-quality crystal oscillator to power-supply voltage changes is 5×10^{-11}/V.

Gas permeation under conditions where there is an abnormally high concentration of hydrogen or helium in the atmosphere can lead to anomalous aging rates. For example, hydrogen can permeate into "hermetically" sealed crystal units in metal enclosures, and helium can permeate through the walls of glass-enclosed crystal units, and through the glass of glass-to-metal seals.

J. R. Vig & F. L. Walls, "Fundamental Limits on the Frequency Instabilities of Quartz Crystal Oscillators," Proc. 1994 IEEE Int'l Frequency Control Symposium, pp. 506-523, 1994

IEEE Standard 1193-1994 “IEEE Guide for Measurement of Environmental Sensitivities of Standard Frequency Generators”.

R. Brendel, “Influence Of a Magnetic Field on Quartz Crystal Resonators,” IEEE Transactions on Ultrasonics, Ferroelectrics, and Frequency Control, vol. 43 no. 5, pp. 818-831, September 1996. This paper is also available at <http://www.ieee.org/uffc/fc> .

Interactions Among Influences

In attempting to measure the effect of a single influence, one often encounters interfering influences, the presence of which may or may not be obvious.

Measurement	Interfering Influence
Resonator aging	ΔT due to oven T (i.e., thermistor) aging Δ drive level due to osc. circuit aging
Short term stability	Vibration
Vibration sensitivity	Induced voltages due to magnetic fields
2-g tipover sensitivity	ΔT due to convection inside oven
Resonator f vs. T (static)	Thermal transient effect, humidity T-coefficient of load reactances
Radiation sensitivity	ΔT, thermal transient effect, aging

4-94

The various influences on frequency stability can interact in ways that lead to erroneous test results if the interfering influence is not recognized during testing. For example, building vibrations can interfere with the measurement of short-term stability. Vibration levels of 10^{-3} g to 10^{-2} g are commonly present in buildings. Therefore, if an oscillator's acceleration sensitivity is 1 x 10^{-9}/g, then the building vibrations alone can contribute short-term instabilities at the 10^{-12} to 10^{-11} level.

The 2-g tipover test is often used to measure the acceleration sensitivity of crystal oscillators. Thermal effects can interfere with this test because, when an oscillator is turned upside down, the thermal gradients inside the oven can vary due to changes in convection currents [6]. Other examples of interfering influences include temperature and drive-level changes interfering with aging tests; induced voltages due to magnetic fields interfering with vibration-sensitivity tests; and the thermal-transient effect, humidity changes, and the effect of load-reactance temperature coefficient interfering with the measurement of crystal units' static *f* vs. *T* characteristics.

An important effect in TCXOs is the interaction between the frequency adjustment during calibration and the *f* vs. *T* stability [71]. This phenomenon is called the *trim effect*.

IEEE Standard 1193-1994 “IEEE Guide for Measurement of Environmental Sensitivities of Standard Frequency Generators”.

Series of papers on IEEE Standard 1193 in the Proc. 1992 IEEE Frequency Control Symposium, pp. 762-830, 1992.

S. R. Stein and J. R. Vig, Frequency Standards for Communications, U. S. Army Laboratory Command Research and Development Technical Report SLCET-TR-91-2, January 1991, AD-A231990

CHAPTER 5
Quartz Material Properties

5

Quartz for the National Defense Stockpile, Report of the Committee on Cultured Quartz for the National Defense Stockpile, National Materials Advisory Board Commission on Engineering and Technical Systems, National Research Council, NMAB - 424, National Academy Press, Washington, D.C., 1985.

R. W. Ward, “The Constants of Alpha Quartz,” Proc. 38th Ann. Symposium on Frequency Control, pp. 22-31, 1984.

L. E. Halliburton, J. J. Martin and D. R. Koehler, “Properties of Piezoelectric Materials,” in E. A. Gerber and A. Ballato, Precision Frequency Control, Vol. 1, pp. 1-45, Academic Press, 1985.

C. Frondel, The System of Mineralogy, Vol. III, “Silica Minerals”, John Wiley and Sons, Inc., New York, 1962.

J. C. Brice, “Crystals for Quartz Resonators,” Reviews of Modern Physics, Vol. 57, No. 1, pp. 105-146, January 1985.

J. A. Weil, “A Review of Electron Spin Spectroscopy and Its Application to the Study of Paramagnetic Defects in Crystalline Quartz,” Physics and Chemistry of Minerals, vol. 10, pp. 149-165, 1984.

Hydrothermal Growth of Quartz

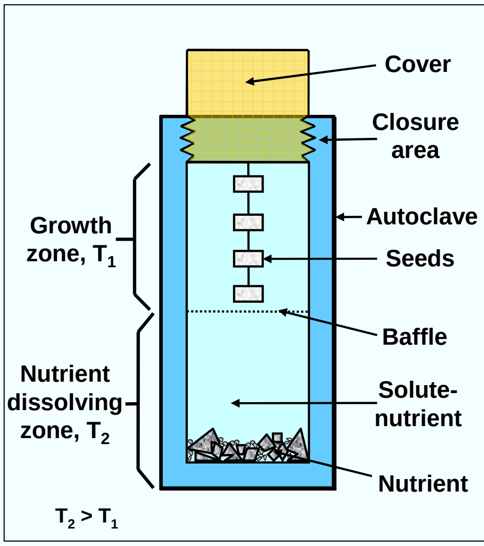

- The autoclave is filled to some predetermined factor with water plus mineralizer (NaOH or Na_2CO_3).
- The baffle localizes the temperature gradient so that each zone is nearly isothermal.
- The seeds are thin slices of (usually) Z-cut single crystals.
- The nutrient consists of small (~2½ to 4 cm) pieces of single-crystal quartz ("lascas").
- The temperatures and pressures are typically about 350^{0}C and 800 to 2,000 atmospheres; T_2 - T_1 is typically 4^{0}C to 10^{0}C.
- The nutrient dissolves slowly (30 to 260 days per run), diffuses to the growth zone, and deposits onto the seeds.

5-1

Prior to ~1956, the material used for quartz resonators was natural quartz, i.e., mined quartz. Today, it is "cultured quartz," i.e., quartz grown in factories. Although this quartz is often referred to as "synthetic quartz," nobody has yet found a way to synthesize single crystal quartz directly from silicon and oxygen. Large quartz bars (typically ~15 cm long) of uniform size and shape are grown from small, irregularly shaped pieces of quartz (called "lascas" by the culturing process described above. So, strictly speaking, the quartz is "cultured quartz".

Quartz is a common material in the earth's crust (e.g., sand is mostly quartz), however, the high purity crystals needed for quartz growing are not so common. Most of the nutrient materials used by quartz growers are mined in Brazil and the USA (near Jessieville, Arkansas).

The autoclave is a long, thick-walled ~25 to 100 cm inner diameter steel tube that can withstand the high temperatures and pressures of the growth process.

The anisotropy of quartz is discussed on the next page, and in chapter 3, where it is pointed out that the highest etching rate direction is the Z-direction. Similarly, during quartz growing, the Z-direction is the fastest direction of growth.

R. A. Laudise and R. L. Barns, "Perfection of Quartz and Its Connection to Crystal Growth," IEEE Transactions on Ultrasonics, Ferroelectrics, and Frequency Control, Vol. 35, No. 3, pp. 277-287, May 1988, IEEE Catalog 88CH2588-2.

Deeply Dissolved Quartz Sphere

Anisotropic Etching

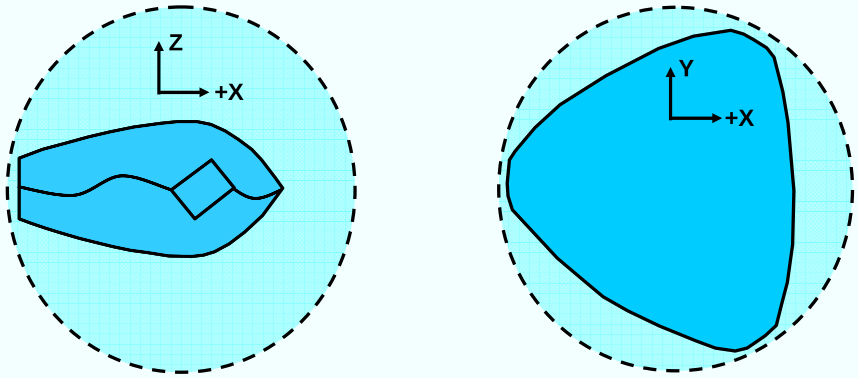

Looking along Y-axis   Looking along Z-axis

Polished quartz spheres, when deeply etched in concentrated HF, dissolve in a highly anisotropic manner. The partially dissolved spheres become "triangular, lenticular," as shown above - the shape is triangular when observed along the Z-axis, and lenticular when observed along the Y-axis. The etching rate along the fastest etching direction, the Z-direction, is nearly 1000 times faster than the rate along the slowest direction, the -X direction.

A good review of the early etching studies can be found in C. Frondel, The System of Mineralogy, Vol. III, "Silica Minerals", John Wiley and Sons, Inc., New York, 1962.

R. W. Ward, "Etching of Quartz Crystal Spheres," Proc. 1993 IEEE Int'l Frequency Control Symposium, pp. 390-396, 1993.

Etching & Chemical Polishing

Etchant Must:
1. Diffuse to Surface
2. Be Adsorbed
3. React Chemically

Reaction Products Must:
4. Be Desorbed
5. Diffuse Away

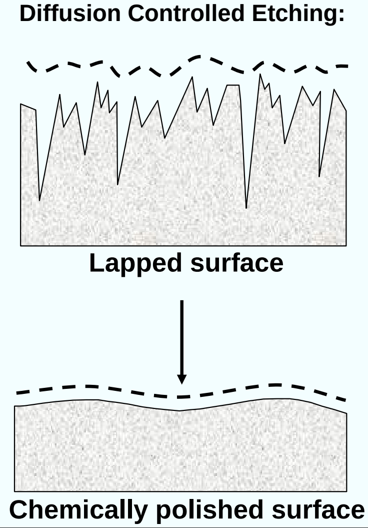

5-3

The etching of a crystal may be limited by any of the five steps shown above. When the etching rate is reaction limited (i.e., when there is a plentiful supply of etchant molecules at the surface), the morpholgy of the etched surface is determined primarily by the properties of the material being etched. Reaction limited etching of an anisotropic material usually results in a rough, faceted surface.

However, when the etching is diffusion limited, i.e., the inherent rate at which a reaction can take place is higher than the rate of diffusion of etchant molecules to the surface, a depleted surface layer of etchant molecules exist, outside which the etchant concentration is uniform, and inside which the concentration decreases to near zero at the surface. When starting with a rough, e.g., a lapped, surface consisting of hills and valleys, as illustrated in the upper right above, the probability of an etchant molecule diffusing to the top of a hill will be greater than the probability of it diffusing to the bottom of a valley. The hills will, therefore, be etched faster than the valleys, and the surface will become smoother as the etching progresses, i.e., the surface will become “chemically polished”. Chemically polished surfaces are not perfectly flat. They are microscopically undulating, but atomically smooth, as illustrated in the lower right above.

J. R. Vig, J. W. LeBus and R. L. Filler, "Chemically Polished Quartz," Proc. 31st Annual Symposium on Frequency Control, pp. 131-143, 1977, AD-A088221.

J. R. Vig, R. J. Brandmayr and R. L. Filler, “Etching Studies On Singly And Doubly Rotated Quartz Plates,” Proc. 33rd Annual Symposium on Frequency Control, pp. 131-143, 1979, AD-A213544.

M. Deleuze, et. al, “Controlled Dissolution Applied to Berlinite and Quartz Materials,” Proc. 1993 IEEE Int’l Frequency Control Symposium, pp. 381-389, 1993.

Left-Handed and Right-Handed Quartz

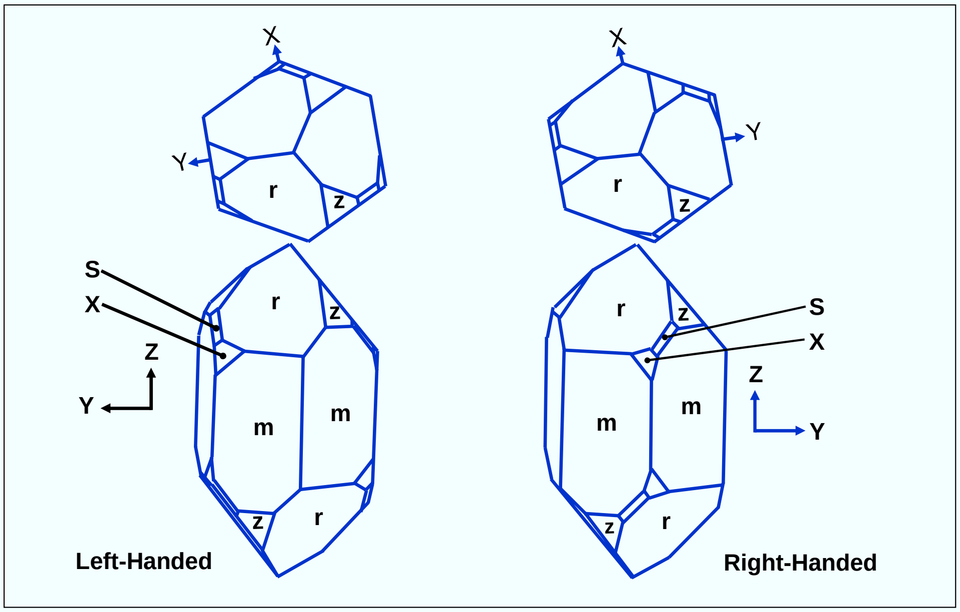

5-4

Quartz is an enantiomorphic crystal, i.e., both right-handed and left-handed crystals exist. The crystal structures of the two forms are mirror images. Neither can be made to look like the other by rotation. Both kinds could be equally useful, however, resonator manufacturing processes have been standardized on right-handed quartz.

Quartz has trigonal structure. The ideal crystal is a hexagonal prism with six cap faces at each end. The prism faces are called the m-faces, and the major cap faces are called the r-faces; they are also called the major rhomb faces. The z-faces are called the minor rhomb faces.

The Z-axis is also called the "optic axis," and the "c-axis". It is an axis of three-fold symmetry, i.e., all the physical properties repeat every 120^o as the crystal is rotated about the Z-axis. The polarization of a beam of plane polarized light passed through quartz along the Z-axis will be rotated by the crystal. The polarization is rotated clockwise in right handed quartz, as seen by an observer looking through the quartz towards the light source. It is rotated counterclockwise by left handed quartz. This "optical rotation" ability is used in optical instruments. (It has no significance in frequency control applications.)

C. Frondel, The System of Mineralogy, Vol. III, "Silica Minerals", John Wiley and Sons, Inc., New York, 1962.

The Quartz Lattice

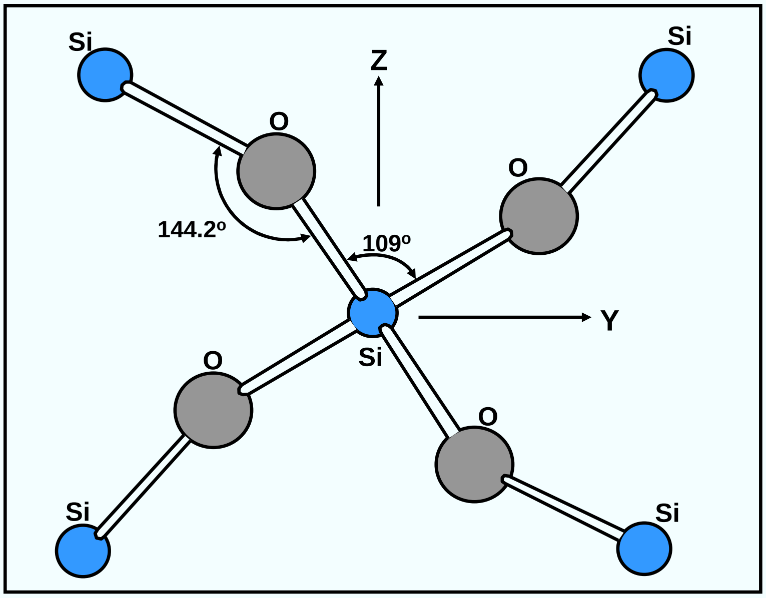

5-5

For pure α-quartz, the lattice constant **a** = 0.4913 nm and c/**a** = 1.10013. Impurities increase the **a** lattice constant, and decrease the axial ratio c/**a**. Small differences between natural quartz and cultured quartz, and between cultured quartz and swept cultured quartz have been measured. Pressure also affects the lattice constants.

The average Si-O bond length is 0.1607 nm, the O-Si-O bond angles vary from 108.3° to 110.7° and the Si-O-Si bond angle is 144.2°.

J. D. Jorgensen, "Compression Mechanisms in α-Quartz Structures - SiO_2 and GeO_2," J. Appl. Phys. Vol 49, pp. 5473-78, 1978.

J. C. Brice, The Lattice Constants of a-Quartz," J. Materials Science, vol. 15, pp. 161-167, 1980.

R. W. Ward, "The Constants of Alpha Quartz," Proc. 38th Ann. Symposium on Frequency Control, pp. 22-31, 1984.

Quartz Properties' Effects on Device Properties

Quartz Property	Device and Device-Fabrication Property
Q	Oscillator short-term stability, phase noise close to carrier, long-term stability, filter loss
Purity (Al, Fe, Li, Na, K, -OH, H_2O)	Radiation hardness, susceptibility to twinning, optical characteristics
Crystalline Perfection, Strains	Sweepability, etchability for chem. polishing and photolithographic processing, optical properties, strength, aging(?), hysteresis(?)
Inclusions	High-temperature processing and applications, resonator Q, optical characteristics, etchability

-

Ions in Quartz - Simplified Model

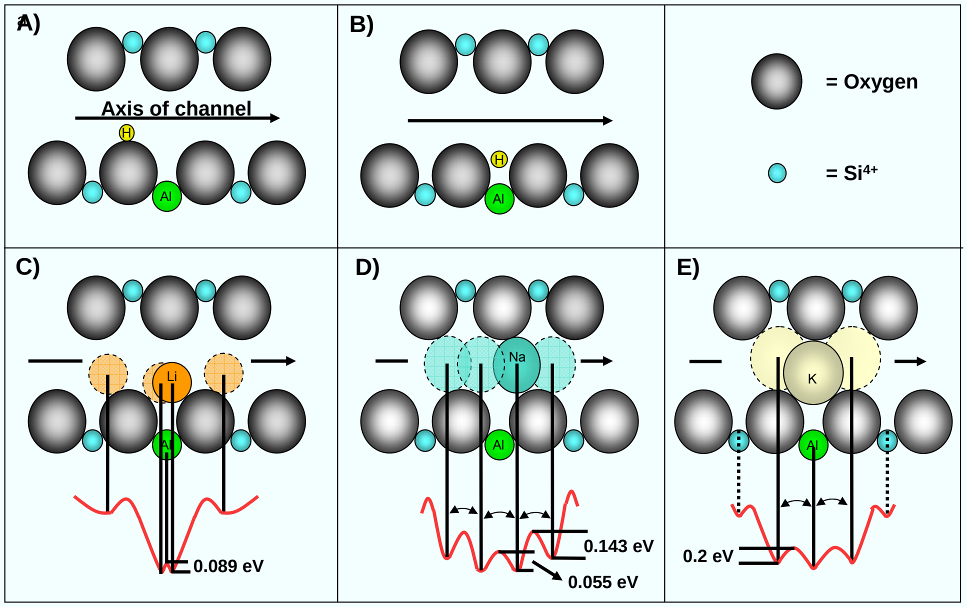

5-7

The above diagrams show qualitative models of the possible positions of H^+ and alkali ions in the channels of the quartz lattice, and the corresponding trends in the potential energy curves. The arrows show the main channels in the quartz lattice - along the z-axis. It takes much less force to move ions along this channel than along other directions.

The H^+ ion is strongly bound to the O ions; A) and B) show two possible models of H^+ in quartz (due to Kats). As the OH bond is very strong, it is unlikely for a H^+ to move along the channel at normal temperatures. C) to E) show the positions of alkali ions in the channels and the corresponding potentials. There is a potential well of ~1 eV depth around the Al^{3+} ion. Superimposed on that are a series of low potential barriers along the channel that are shown above. In the Li^+ case, only one kind of transition is likely. In the Na^+ and K^+ cases, two different kinds of transitions are likely.

When the Q of a resonator is measured as a function of temperature, defects such as the Al-alkali centers cause acoustic losses as the thermally activated alkalis couple to the oscillating stress field; e.g., the Al-Na^+ center causes an acoustic loss peak at 50 K in 5 MHz 5th overtone AT-cut resonators. Above room temperature, the interstitial alkalis are thermally liberated and diffuse along the z-axis which results in Q losses that increase exponentially with temperature. Such Q losses, and the Al-Na^+ loss peak are not present in swept crystals (see "Sweeping" later in this chapter).

Ionizing radiation creates electron-hole pairs that make a transient electrical conductivity increase. It also liberates ions and allows the ions to move from one potential well to another, thereby changing the elastic constants. A pulse of radiation thereby causes both a transient and steady-state change in the resonator's frequency (see radiation effects discussion in chapter 4).

J. M. Stevels and J. Volger, "Further Experimental Investigations on the Dielectric Losses of Quartz Crystals in Relation to Their Imperfections," Philips Res. Reports. 17, pp. 283-314, 1962.

A. Kats, "Hydrogen in Alpha-quartz, Philips Res. Reports. 17, pp. 133-195, 201-279, 1962.

L. E. Halliburton, J. J. Martin & D. R. Koehler, "Properties of Piezoelectric Materials," in E. A. Gerber and A. Ballato, Precision Frequency Control, Vol. 1, pp. 1-45, Academic Press, 1985.

Aluminum Associated Defects

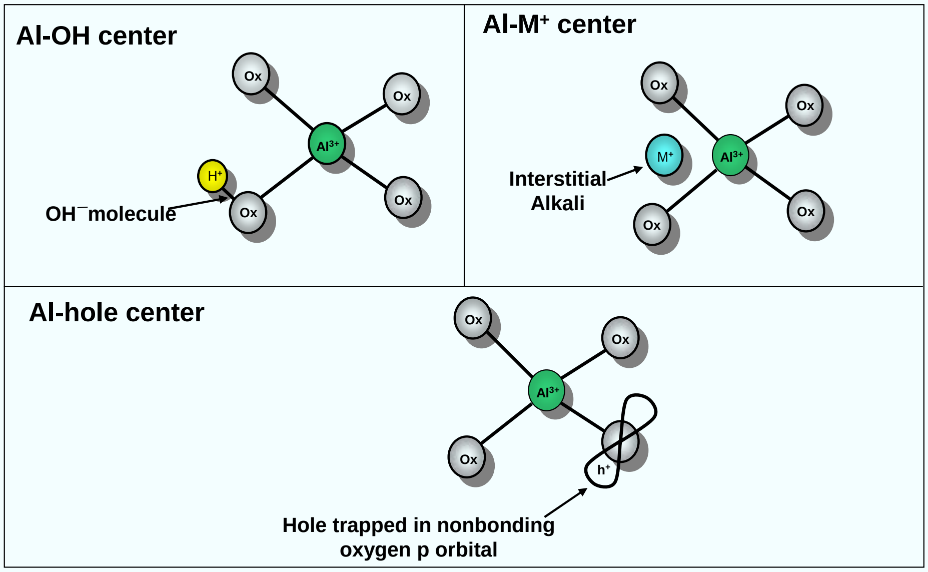

5-8

Al^{3+} ions readily substitute for Si^{4+} ions in quartz. When such substitution occurs, a charge compensator is needed for charge neutrality. Four compensators are known in quartz: H^+, Li^+, Na^+ and a hole trapped at an oxygen ion. Above is a schematic representation of the aluminum associated centers: Al-OH^- center, Al-M^+ center (where M is an interstitial alkali, either Li^+, or Na^+), and Al-hole center. The Al-OH^- center is formed when an interstitial proton bonds to an oxygen ion.

The aluminum related centers are related to acoustic losses and radiation induced frequency shifts in quartz resonators. These effects can be reduced by an electrodiffusion process called “sweeping,” a process that removes the interstitial cations (H^+, Li^+, Na^+) from the quartz lattice - see next two pages.

The Al-hole center consists of a hole, i.e., a missing electron, trapped in a nonbonding p orbital of an oxygen ion located near a substitutional Al. These are so weakly bound (0.03 eV) that, at room temperature, the hole is rapidly jumping among the four oxygens surrounding the Al. Al-hole centers affect the optical absorption (smoky coloration) of quartz.

Oxygen vacancy centers, called E’ centers, are another class of point defects. These centers affect the ultraviolet absorption of quartz.

L. E. Halliburton, J. J. Martin & D. R. Koehler, “Properties of Piezoelectric Materials,” in E. A. Gerber and A. Ballato, Precision Frequency Control, Vol. 1, pp. 1-45, Academic Press, 1985.

L. E. Halliburton, M. E. Markes, and J. J. Martin, “Point Defects in Synthetic Quartz: A Survey of Spectroscopic Results With Application to Quality Assurance,” Proc. 34th Annual Symposium on Frequency Control, pp. 1-8, 1980, AD-A213670. Proc. copies available from NTIS.

L. E. Halliburton, N. Koumvakalis, M. E. Markes, and J. J. Martin, “Radiation Effects in Crystalline SiO_2: The Role of Aluminum,” J. Appl. Phys., Vol. 52, pp. 3565-3574, 1981.

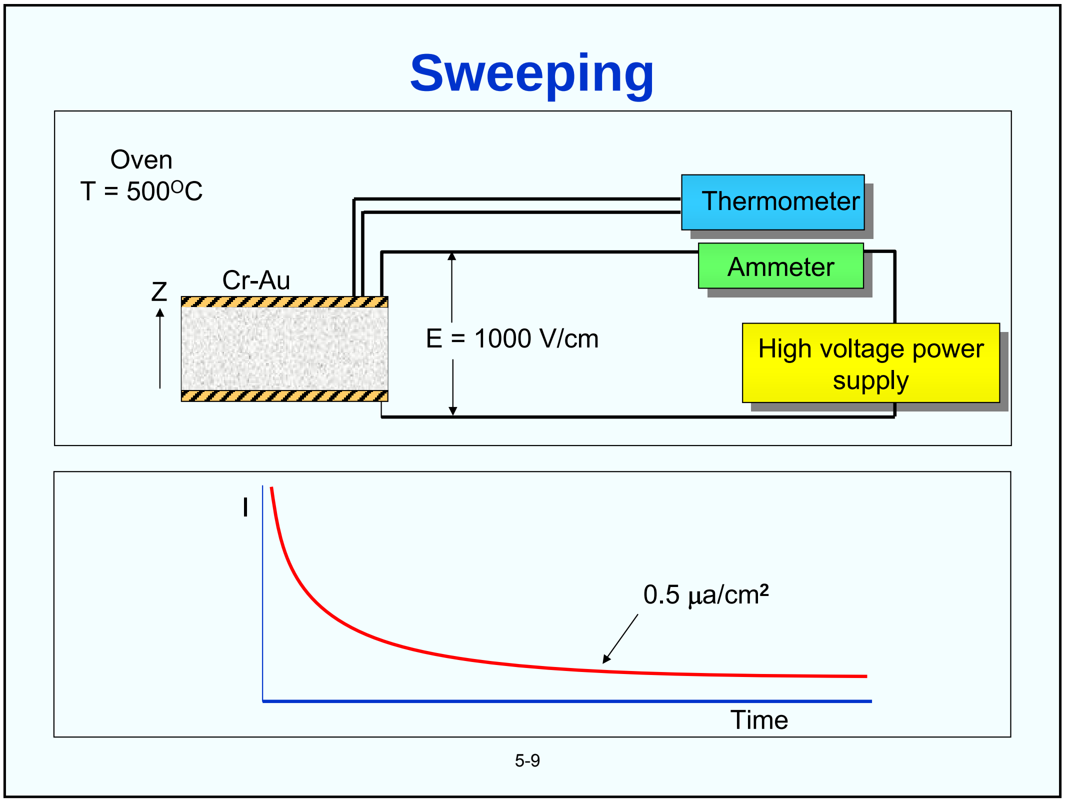

Sweeping is a purification process which removes certain impurities from the quartz and thereby improves the radiation hardness and etching properties of quartz crystals. It is an electric-field driven, solid-state diffusion process that is performed at an elevated temperature. As illustrated above, the major steps of a typical sweeping process consist of applying electrodes to the Z-surfaces of a lumbered quartz bar, heating the bar slowly to 500^{0}C, applying a voltage to the electrodes such that the electric field along the Z-direction is about 1 kV/cm, monitoring the current through the bar (as the sweeping progresses, the current decreases), and, after the current decays to some constant value, cooling the bar slowly to room temperature, then removing the voltage.

Under the influences of high electric field and high temperature, the positive impurity ions, such as Li^+ and Na^+, diffuse to the cathode and are removed when the electrodes are removed in subsequent processing. In addition to improving radiation hardness, sweeping also greatly reduces the number of etch channels that are produced when quartz is etched.

Quartz has large channels along the c-axis (also called Z-axis). The interstitial ions can readily migrate along these channels. The sweeping rate is much lower when the electric field is applied along other directions.

J. J. Martin, “Electrodiffusion (Sweeping) of Ions in Quartz,” IEEE Transactions on Ultrasonics, Ferroelectrics, and Frequency Control, Vol. 35, No. 3, pp. 288-296, May 1988, IEEE Catalog 88CH2588-2.

J. G. Gualtieri, “Sweeping Quartz Crystals,” Proc. 1989 IEEE Ultrasonics Symposium, pp. 381-391, 1989.

Quartz Quality Indicators

- Infrared absorption coefficient*
- Etch-channel density *
- Etch-pit density
- Inclusion density *
- Acoustic attenuation
- Impurity analysis
- X-ray topography
- UV absorption
- Birefringence along the optic axis
- Thermal shock induced fracture
- Electron spin resonance
- ? ? ?

* EIA Standard 477-1 contains standard test method for this quantity

5-10

The first four tests listed above are the most commonly used quality indicators.

G. R. Johnson and R. A. Irvine, “Etch Channels in Single Crystal Cultured Quartz,” Proc. 41st Annual Symposium on Frequency Control, pp. 175-182, 1987, IEEE Catalog No. 87CH2427-3.

J. R. Vig, J. W. LeBus and R. L. Filler, "Chemically Polished Quartz," Proc. 31st Annual Symposium on Frequency Control, pp. 131-143, 1977, AD-A088221. Proc. copies available from NTIS.

Infrared Absorption of Quartz

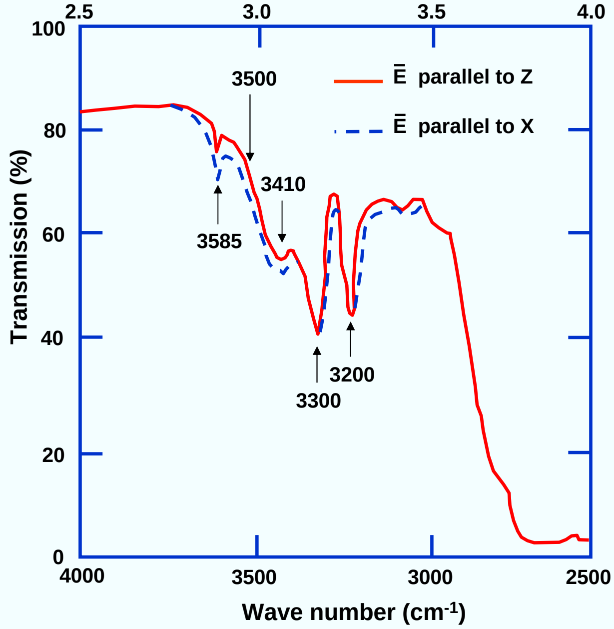

5-11

The importance of Q, and the factors that influence it, are discussed in chapter 3. The Q of a resonator is due to a combination of factors, one of which is the quartz material. The material can limit a resonator's Q, but the contribution of the material cannot be determined from measuring the Q of a resonator.

Infrared absorption by the quartz material used to make a resonator correlates well with the maximum Q achievable with that resonator, at a particular frequency; 5 MHz is the standard frequency used for correlations. The figure above shows the transmission spectra of a 20 mm thick sample, with the IR incident along two perpendicular directions, X and Z.

"Infrared Q" measurements, per EIA Standard 477-1, are routinely used by quartz growers and users as an indicator of quartz quality (see next page).

J. C. Brice and A. M. Cole, "The Characterization of Synthetic Quartz by Using Infrared Absorption," Proc. 32nd Annual Symposium on Frequency Control, pp. 1-10, 1978.

B. Sawyer, "Quality Indications From Infrared Absorption Measurements on Cultured Quartz," IEEE Transactions on Ultrasonics, Ferroelectrics, and Frequency Control, Vol. UFFC-34, No. 5, pp. 558-565, September 1987.

D. M. Dodd and D. B. Fraser, "Infra-red Studies of the Variation of H-bonded OH in Synthetic α-Quartz," J. Phys. Chem. Solids, vol. 26, pp. 673-686, 1965.

Infrared Absorption Coefficient

One of the factors that determine the maximum achievable resonator Q is the OH content of the quartz. Infrared absorption measurements are routinely used to measure the intensities of the temperature-broadened OH defect bands. The **infrared absorption coefficient** α is defined by EIA Standard 477-1 as

$$\alpha = \frac{A\ (3500\ cm^{-1}) - A\ (3800\ cm^{-1})}{\text{Y-cut thickness in cm}}$$

where the A's are the logarithm (base 10) of the fraction of the incident beam absorbed at the wave numbers in the parentheses.

Grade	α, in cm^{-1}	Approx. max. Q*
A	0.03	3.0
B	0.045	2.2
C	0.060	1.8
D	0.12	1.0
E	0.25	0.5

* In millions, at 5 MHz (α is a quality indicator for unswept quartz only).

EIA Standard 477-1, available from Electronic Industries Alliance, 2500 Wilson Blvd., Arlington, VA 22201-3834, USA,

Tel: +1 703 907 7500, <http://www.eia.org>

Quartz Twinning

Electrical twinning   Optical Twinning

- The X-axes of quartz, the electrical axes, are parallel to the line bisecting adjacent prism faces; the +X-direction is positive upon extension due to tension.
- Electric twinning (also called Dauphiné twinning) consists of localized reversal of the X-axes. It usually consists of irregular patches, with irregular boundaries. It can be produced artificially by inversion from high quartz, thermal shock, high local pressure (even at room temperature), and by an intense electric field.
- In right-handed quartz, the plane of polarization is rotated clockwise as seen by looking toward the light source; in left handed, it is counterclockwise. Optically twinned (also called Brazil twinned) quartz contains both left and right-handed quartz. Boundaries between optical twins are usually straight.
- Etching can reveal both kinds of twinning.

5-13

Natural quartz often consists of partly right handed and partly left handed quartz. Such crystals are said to be optically twinned. Optical twins are growth twins, i.e., if absent from a crystal when the crystal is grown, they cannot be induced subsequently without breaking silicon-oxygen bonds. Electrical twins, on the other hand, can be produced in quartz by the application of mechanical and thermal stress. The higher the temperature, the less stress is required to produce this type of twinning. The atomic shifts necessary to produce electrical twinning (~0.03 nm) are less than one-tenth of the lattice spacings; no breaking of bonds takes place.

Twinned plates are not useful for frequency control applications. It is, therefore, necessary to avoid high stresses during fabrication, especially at elevated temperatures. Processes such as the thermocompression bonding of mounting clips to the edges of quartz plates can readily produce twinning, if not done carefully. Twinning has also produced failures in quartz pressure transducers used at high pressures and temperatures, e.g., in oil wells.

It has been observed that it takes less stress to produce twinning in very high Q, high purity quartz than in lower quality quartz. One company specifies both a minimum and a maximum material Q; a minimum to ensure that the material does not limit the overall electrical Q performance, and a maximum to minimize the incidence of twinning*.

C. Frondel, The System of Mineralogy, Vol. III, “Silica Minerals”, John Wiley and Sons, Inc., New York, 1962.

T. L. Anderson, R. E. Newnham and L. E. Cross, "Coercive Stress for Ferrobielastic Twinning in Quartz," Proc. 31st Annual Symposium on Frequency Control, pp. 171-177, 1977, AD-A088221.

Jack Kusters, Hewlett-Packard Co., private communication circa 1985, confirmed in 1999.

Twinning - Axial Relationships

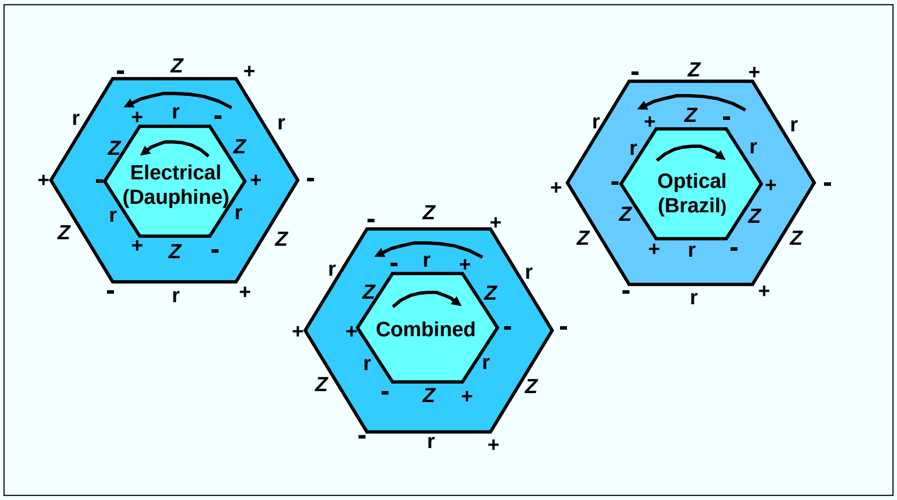

The diagrams illustrate the relationship between the axial system and hand of twinned crystals. The arrows indicate the hand.

5-14

T. L. Anderson, R. E. Newnham & L. E. Cross, "Coercive Stress for Ferrobielastic Twinning in Quartz," Proc. 31st Annual Symposium on Frequency Control, pp. 171-177, 1977, AD-A088221.

Processing Related Twinning References:

D. A. Cocuzzi & J. W. Laughner, “Effects of Surface Abrasion And Impurity Levels on Stress-induced Dauphine Twinning in Alpha Quartz,” Proc. 43rd Ann. Symp. On Frequency Control, Pp. 617-622, 1989.

E. P. EerNisse & R. W. Ward, “Quartz Resonator Sensors in Extreme Environments,” Proc. 45th Ann. Symp. on Frequency Control, pp. 254-260, 1991.

J.J. Boy & P.L. Guzzo, “Quartz Crystal Twinning Under Mechanical Stress: Experimental Measurements,” Proc. 1996 IEEE Frequency Control Symp., pp. 155-160, 1996.

T. Uno, “Temperature Compensation of Thickness Shear Mode Resonators Formed on Artificial Twinned Quartz Plates,” Proc. 1996 IEEE Frequency Control Symp., pp. 526-531, 1996.

Quartz Lattice and Twinning

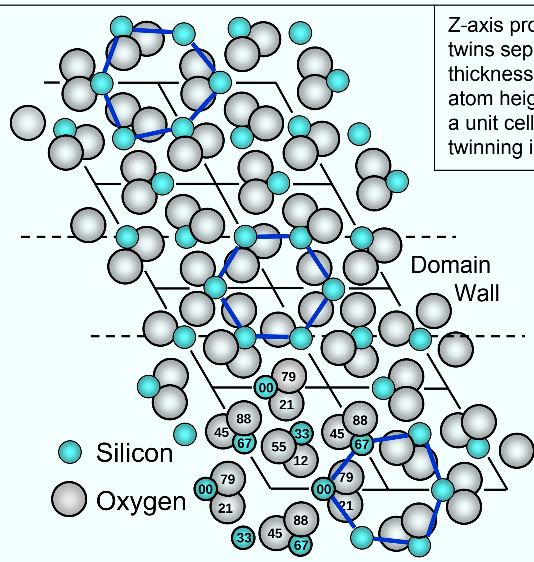

Z-axis projection showing electric (Dauphiné) twins separated by a twin wall of one unit cell thickness. The numbers in the atoms are atom heights expressed in units of percent of a unit cell height. The atom shifts during twinning involve motions of <0.03 nm.

T. L. Anderson, R. E. Newnham and L. E. Cross, "Coercive Stress for Ferrobielastic Twinning in Quartz," Proc. 31st Annual Symposium on Frequency Control, pp. 171-177, 1977, AD-A088221. Proc. copies available from NTIS.

Quartz Inversion

- Quartz undergoes a high-low inversion (α - β transformation) at 573^0C. (It is 573^0C at 1 atm on rising temperature; it can be 1^0 to 2^0C lower on falling temperature.)
- Bond angles between adjoining (SiO_4) tetrahedra change at the inversion. Whereas low-quartz (α-quartz) is trigonal, high quartz (β -quartz) is hexagonal. Both forms are piezoelectric.
- An abrupt change in nearly all physical properties takes place at the inversion point; volume increases by 0.86% during inversion from low to high quartz. The changes are reversible, although Dauphiné twinning is usually acquired upon cooling through the inversion point.
- Inversion temperature decreases with increasing Al and alkali content, increases with Ge content, and increases 1^0C for each 40 atm increase in hydrostatic pressure.

5-16

C. Frondel, The System of Mineralogy, Vol. III, “Silica Minerals”, John Wiley and Sons, Inc., New York, 1962.

Phase Diagram of Silica (SiO_2)

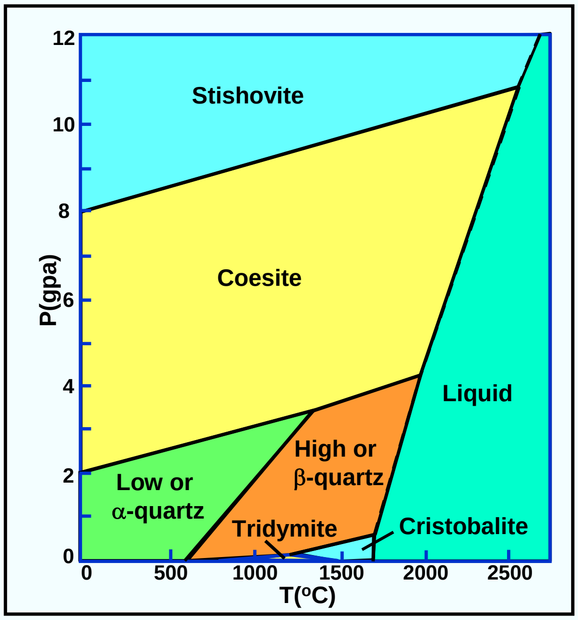

5-17

Shown above is the phase diagram for single crystal silica, SiO_2. The Y-axis shows pressure in gigapascals. The temperature of phase transition between α-quartz and β-quartz increases with increasing pressure. The α-β transition temperature is 573°C at one atmosphere pressure. It increases to about 600°C at the typical pressures used for growing quartz in autoclaves.

In frequency control applications, only α-quartz is used.

-

R. B. Susman, The Phases of Silica, Rutgers Univ. Press, New Brunswick, NJ 1965.

C. Frondel, The System of Mineralogy, Vol. III, “Silica Minerals”, John Wiley and Sons, Inc., New York, 1962.

Internal Friction (i.e., the Q) of Quartz

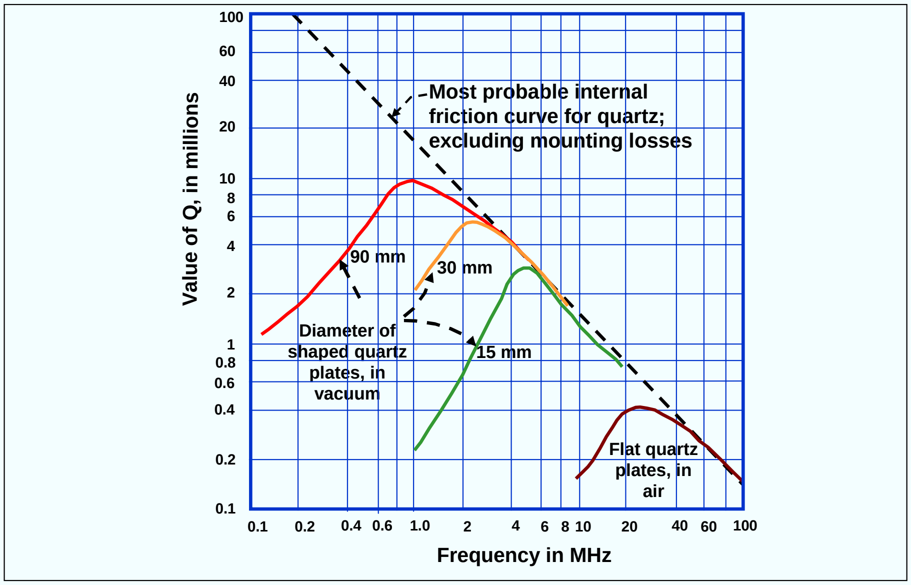

Empirically determined Q vs. frequency curves indicate that the maximum achievable
Q times the frequency is a constant, e.g., 16 million for AT-cut resonators, when f is in MHz.

5-18

See chapter 3 for further information about Q. Also see “Ions in Quartz - Simplified Model” earlier in chapter 5 for information about acoustic losses due to aluminum-alkali centers.

A. W. Warner, "Design and Performance of Ultraprecise 2.5-mc Quartz Crystal Units," Bell System Technical Journal, pp. 1193-1217, Sept. 1960; also in "An Ultraprecise Standard of Frequency," W. L. Smith, final report for U. S. Army contract DA 36-039 sc-73078, p. 13, 1 Dec. 1960, AD-253034.

V. B. Braginsky, V. P. Mitrofanov & V. I. Panov, Systems with Small Dissipation, The University of Chicago Press, 1985.

Langasite and Its Isomorphs

$La_3Ga_5SiO_{14}$	Langa**s**ite (LGS)
$La_3Ga_{5.5}Nb_{0.5}O_{14}$	Langa**n**ite (LGN)
$La_3Ga_{5.5}Ta_{0.5}O_{14}$	Langa**t**ate (LGT)

- Lower acoustic attenuation than quartz (higher Qf than AT- or SC-cut quartz)
- No phase transition (melts at ~1,400 ^{o}C vs. phase transition at 573 ^{o}C for quartz)
- Higher piezoelectric coupling than quartz
- Thicker than quartz at the same frequency
- Temperature-compensated

5-19

Ever since quartz became the material of choice for crystal oscillators (in the 1920s), researchers have been looking for materials that are even better than quartz. Many materials have looked promising, e.g., berlinite, lithium tetraborate, and gallium phosphate, but nothing has equaled quartz.

Langasite (also called LGS) and its isomorphs, langanite (LGN), langatate (LGT), etc. look highly promising. The Qf product of LGT resonators has been shown to be double that of quartz. Some of the possible consequences of the improved properties of these materials are as follows:

• Higher Q at the same frequency can lead to lower phase noise close to the carrier (where $\mathcal{L}(f) \propto 1/Q^4$)

• Absence of phase transition and high melting point allows higher temperature processing - which can lead to cleaner, lower aging and lower hysteresis resonators, and to sensors capable of high-temperature operation

• Higher piezoelectric coupling allows higher overtones; possibly lower hysteresis in higher overtone resonators; greater tunability in VCXOs; and, in filter applications, wider bandwidth, lower impedance, and higher frequency operation

• Larger thickness at the same frequency implies less deformation under acceleration and hence, possibly, lower acceleration sensitivity.

B.V. Mill, Y.V. Pisarevsky, E.L. Belokoneva, “Synthesis, Growth and Some Properties of Single Crystals with $Ca_3Ga_2Ge_4O_{14}$ Structure,” Proc. 1999 IEEE Int’l Frequency Control Symposium, 1999 Joint Meeting EFTF-IEEE IFCS, pp. 829-834, 1999.

B. Chai, et al., “Growth and Evaluation of Large Size LGS ($La_3Ga_5SiO_{14}$), LGN ($La_3Ga_{5.5}Nb_{0.5}O_{14}$), & LGT ($La_3Ga_{5.5}Ta_{0.5}O_{14}$) Single Crystals,” Proc. 1998 IEEE Int’l Frequency Control Symposium, pp. 748-760, 1998.

R.C. Smythe, et al., “Langasite, langanite, and langatate bulk-wave Y-cut resonators;” Ultrasonics, Ferroelectrics and Frequency Control, IEEE Transactions on , Volume: 47 Issue: 2 , pp. 355 -360, March 2000.

CHAPTER 6
Atomic Frequency Standards*

* There are two important reasons for including this chapter: 1. atomic frequency standards are one of the most important applications of precision quartz oscillators, and 2. those who study or use crystal oscillators ought to be aware of what is available in case they need an oscillator with better long-term stability than what crystal oscillators can provide.

6

General References

H. Hellwig, "Frequency Standards and Clocks: A Tutorial Introduction," NBS Technical Note 616, 1977, Time and Frequency Division, NIST, 325 Broadway, Boulder, Colorado, 80303.

H. Hellwig, "Microwave Frequency and Time Standards," in E. A. Gerber and A. Ballato, Precision Frequency Control, Vol. 2, pp. 113-176, Academic Press, 1985.

H. Hellwig, "Microwave Time and Frequency Standards," Radio Science, Vol. 14, No. 4, pp. 561-572, July-August 1979.

F. G. Major, The Quantum Beat - The Physical Principles of Atomic Clocks, Springer-Verlag, 1998.

J. Vanier and C. Audoin, The Quantum Physics of Atomic Frequency Standards, ISBN 0-85274-434-X, Adam Hilger, 1978.

S. R. Stein and J. R. Vig, "Frequency Standards for Communications," U. S. Army Laboratory Command Research and Development Technical Report SLCET-TR-91-2 (Rev. 1), October 1991, AD-A243211. This report is a reprint of a chapter "Communications Frequency Standards," in The Froehlich/Kent Encyclopedia of Telecommunications, Vol. 3, pp. 445-500, Marcel Dekker, Inc., 1992.

L. L. Lewis, "An Introduction to Frequency Standards," Proc. IEEE, vol. 79, pp. 927-935, 1991.

N. F. Ramsey, Molecular Beams, Oxford University Press, 1956.

P. Forman, "Atomichron: The Atomic Clock from Concept to Commercial Product," Proc. of the IEEE, Vol. 73, No. 7, pp. 1181-1204, July 1985.

Several review papers, including three on the environmental sensitivities of atomic frequency standards, are contained in the Proc. 22nd Ann. Precise Time and Time Interval (PTTI) Applications and Planning Meeting, NASA Conference Publ. 3116, 1990; AD-A239372.

Proceedings of the IEEE, Special Issue on Time and Frequency, J. Jespersen & D. W. Hanson, ed's., Vol. 79, No. 7, July 1991.

Precision Frequency Standards

- **Quartz crystal resonator-based** (f ~ 5 MHz, Q ~ 10^6)
- **Atomic resonator-based**

  Rubidium cell (f_0 = 6.8 GHz, Q ~ 10^7)

  Cesium beam (f_0 = 9.2 GHz, Q ~ 10^8)

  Hydrogen maser (f_0 = 1.4 GHz, Q ~ 10^9)

  Trapped ions (f_0 > 10 GHz, Q > 10^{11})

  Cesium fountain (f_0 = 9.2 GHz, Q ~ 5 x 10^{11})

A high Q is necessary (but not sufficient) for high frequency stability - see Chapter 3 for a discussion of Q. The higher the Q, the higher the frequency stability and accuracy **capability** of a resonator. If, e.g., Q = 10^6, then 10^{-10} accuracy requires the ability to determine the center of the resonance curve to 0.01% of the linewidth, and stability (for some averaging time) of 10^{-12} requires the ability to stay near the peak of the resonance curve to 10^{-6} of linewidth.

A high Q is not sufficient for high stability because a high Q resonator may, for example, have a poor temperature stability. Sapphire resonators, for example, can have a very high Q, but their poor temperature stability prevents their use in clocks.

The Q, or line width of an atomic transition is determined by the observation time. The atomic resonance Qs listed above are typical values. Laser cooling of atoms can significantly extend the observation time and Q (see "Laser Cooling of Atoms" later in this chapter. Laser cooling is necessary to achieve a Cs fountain).

Atomic Frequency Standard Basic Concepts

When an atomic system changes energy from an exited state to a lower energy state, a photon is emitted. The photon frequency ν is given by Planck's law

$$\nu = \frac{E_2 - E_1}{h}$$

where E_2 and E_1 are the energies of the upper and lower states, respectively, and h is Planck's constant. An atomic frequency standard produces an output signal the frequency of which is determined by this intrinsic frequency rather than by the properties of a solid object and how it is fabricated (as it is in quartz oscillators).

The properties of isolated atoms at rest, and in free space, would not change with space and time. Therefore, the frequency of an ideal atomic standard would not change with time or with changes in the environment. Unfortunately, in real atomic frequency standards: 1) the atoms are moving at thermal velocities, 2) the atoms are not isolated but experience collisions and electric and magnetic fields, and 3) some of the components needed for producing and observing the atomic transitions contribute to instabilities.

6-2

Atomic frequency standards must be understood in terms of the concepts of quantum mechanics. The properties of simple atomic systems cannot assume arbitrary values. For example, the energies of the bound states of an atomic system are constrained to discrete values called *energy levels*. When an atomic system changes energy from an excited state to a state with lower energy, it emits a quantity of electromagnetic energy called a *photon*, the frequency of which is determined by the energy difference between the two states, in accordance with Planck's law, shown above.

Atomic systems can be isolated from unwanted perturbations, which result in small sensitivities to temperature, pressure, and other environmental conditions. The low level of interaction also results in extremely sharp resonance features, and reduces errors due to imperfections in the electronics. All atoms of an element are identical, and atomic properties are time invariant, which makes it possible to build very stable devices.

Atomic frequency standards are categorized in several ways; most often, they are referred to by the type of atom: hydrogen, rubidium, or cesium. Actually, these three devices are based on the same type of atomic interaction, but there are great practical differences in their implementation. Some atomic frequency standards, called oscillators, are active, in which case the output signal is derived from the radiation emitted by the atom. Others are passive; the atoms are then employed as a discriminator to measure and control the frequency of an electronic oscillator, such as a quartz oscillator. The third classification follows the method of interaction. In atomic beams, the atoms are observed "on the fly"; they pass through the interaction region and are not used again. In contrast, storage devices contain some type of cell that holds the atoms to be observed indefinitely (ideally).

S. R. Stein and J. R. Vig, "Frequency Standards for Communications," U. S. Army Laboratory Command Research and Development Technical Report SLCET-TR-91-2 (Rev. 1), October 1991, AD-A243211. This report is a reprint of a chapter, "Communications Frequency Standards," in The Froehlich/Kent Encyclopedia of Telecommunications, Vol. 3, pp. 445-500, Marcel Dekker, Inc., 1992.

Hydrogen-Like Atoms

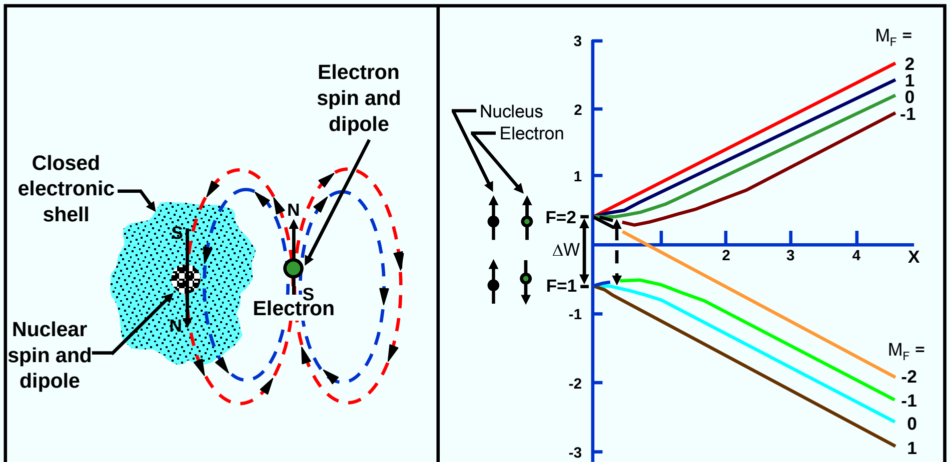

Hydrogen-like (or alkali) atoms

Hyperfine structure of ^{87}Rb, with nuclear spin I=3/2, $\nu_0=\Delta W/h$=6,834,682,605 Hz and $X=[(-\mu_J/J)+(\mu_I/I)]H_0/\Delta W$ calibrated in units of 2.44 x 10^3 Oe.

6-3

All commercial atomic frequency standards are based on hyperfine transitions of one of three hydrogen-like atoms, rubidium, cesium and hydrogen.

The energy levels of an atom are generally classified according to their physical origin. For example, the principal levels of an atom are associated with the radius of the "orbit" of an electron about the nucleus. These levels have the largest atomic energy separations. The principal energy levels are subdivided as a result of the quantization of the angular momentum of the atom. The angular momentum due to the motion of a particle, such as an electron, is called *orbital angular momentum*. Even when their motion is such that there is no orbital angular momentum, atomic particles may possess an intrinsic angular momentum or spin and a proportional intrinsic magnetic moment. The principal levels are first divided according to the shape of the electron "orbits." Still finer division occurs as a consequence of the particular orientation of the electron's spin and the spin of the nucleus.

The photons emitted when atoms change states among the principal energy levels are usually in the infrared and higher energy regions of the electromagnetic spectrum. The frequencies of these energetic photons are too high for practical electronic devices. Atomic frequency standards are feasible because of the splitting of the ground state of the atom. Next lower, in terms of energy, is the fine structure of the atom, which results from the interaction of the spin of the electron with the magnetic field due to the motion of the electron through the nuclear electric field. This structure is thousands of times smaller than the separation of the principal energy levels. Laboratory atomic frequency standards based on fine structure in calcium and magnesium have been built, but the fundamental frequencies of the atomic transitions are higher than 600 GHz, which is difficult to synthesize.

A finer energy splitting than the spin-orbit coupling is produced by the interaction of the electron and nuclear spins; this is called the *hyperfine structure*. The ground state of a hydrogen-like atom (e.g., H, Li, Na, K, Rb, Cs, and singly ionized Be) has a single unpaired electron in a symmetric orbit. In this case, there is no orbital angular momentum and no fine structure. The energy splitting due to the intrinsic magnetic moments of the electron and the nucleus can be a million times smaller than the separation of the principal energy levels. The transition frequencies are convenient: 1.4 GHz for hydrogen, 6.8 GHz for rubidium, and 9.2 GHz for cesium.

Atomic Frequency Standard*

Block Diagram

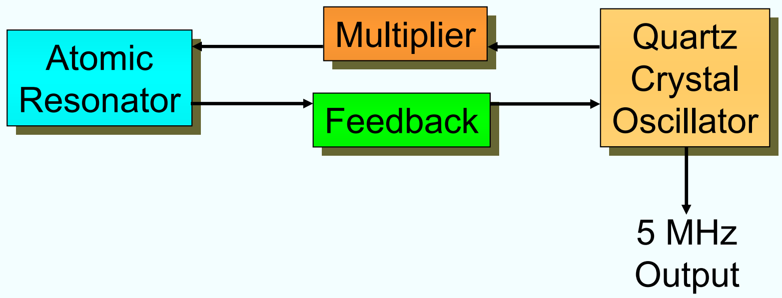

*** Passive microwave atomic standard (e.g., commercial Rb and Cs standards)**

6-4

Atomic resonators are inherently noisy due to the discreet nature of atomic transitions. The short term stabilities, $\sigma_y(\tau)$ vs. τ, vary as the square-root of the measurement interval, i.e., as $\tau^{1/2}$, for short intervals. This is due to the statistics of counting atomic transitions; $\sigma_y(\tau)$ varies as the square-root of the number of transitions. Crystal oscillators are less noisy at small τ. Therefore, in all commercial atomic standards, the atomic resonator frequency is generated from the crystal oscillator's frequency (by frequency multiplication or frequency synthesis), and the crystal oscillator frequency is locked to the frequency of the atomic resonator with a servo loop time constant that is selected to provide optimum performance for the intended application. Of the many atomic transitions available, the ones selected are those which are least sensitive to environmental effects and which can be conveniently locked to the VCXO.

The atomic standard behaves as the crystal oscillator for measurement times shorter than the time constant (which, for example, is typically 100 ms to 500 ms for a Rb standard, longer in Cs standards), and it behaves as an atomic oscillator for measurement times longer than the time constant.

Since all atomic frequency standards derive their output signal from quartz oscillators, the performance of the atomic standards is significantly affected by the capabilities of the crystal oscillators. In particular, the short-term frequency stability, the vibration sensitivity, the radiation pulse sensitivity, and the sensitivity to thermal transients depend on the performance of the crystal oscillator. The atomic resonator's superior long term stability and lower sensitivity to environmental changes is used to "servo out" the crystal oscillator's aging and some of the crystal oscillator's environmental sensitivities.

L. L. Lewis, "An Introduction to Frequency Standards," Proc. IEEE, vol. 79, pp. 927-935, 1991.

H. Hellwig, "Frequency Standards and Clocks: A Tutorial Introduction," NBS Technical Note 616, 1977, Time and Frequency Division, NIST, 325 Broadway, Boulder, Colorado, 80303.

H. Hellwig, "Microwave Frequency and Time Standards," in E. A. Gerber and A. Ballato, Precision Frequency Control, Vol. 2, pp. 113-176, Academic Press, 1985.

Generalized Microwave Atomic Resonator

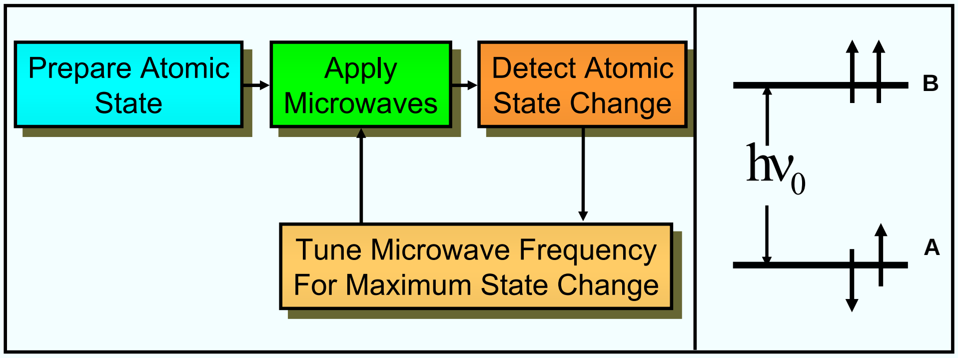

6-5

- Let A and B be two possible energy states of an atom, separated by energy $h\nu_o$; then ν_o is the frequency of the electromagnetic radiation required to convert the atoms from A to B, or from B to A; ν_o is in the microwave range for all currently manufactured atomic standards.

- Population difference between energy states, when $h\nu_o << kT$, is near zero. Therefore, in a natural ensemble of atoms, when ν_o is applied, about half the atoms absorb $h\nu_o$ and half emit $h\nu_o$; the net effect is zero.

- A nonthermal distribution is prepared, i.e., one of the states is "selected," by optical excitation from one of the levels to a third level or by magnetic deflection of an atomic beam.

- Microwave energy is absorbed in the process of converting the selected atoms to the other energy state, e.g., from A to B. Thus, the applied microwave frequency can be "locked" to the frequency corresponding to the atomic transition.

The microwave signals that interrogate the atoms are generally modulated at audio frequencies. Phase sensitive detection of the atomic signal is used to adjust the frequency of the crystal oscillator to the frequency that produces the maximum atomic signal.

L. L. Lewis, “An Introduction to Frequency Standards,” Proc. IEEE, vol. 79, pp. 927-935, 1991.

Atomic Resonator Concepts

- The energy levels used are due to the spin-spin interaction between the atomic nucleus and the outer electron in the ground state ($^2S_{1/2}$) of the atom; i.e., the ground state hyperfine transitions.
- Nearly all atomic standards use Rb or Cs atoms; nuclear spins I = 3/2 and 7/2, respectively.
- Energy levels split into 2(I ± 1/2)+1 sublevels in a magnetic field; the "clock transition" is the transition between the least magnetic-field-sensitive sublevels. A constant magnetic field, the "C-field," is applied to minimize the probability of the more magnetic-field-sensitive transitions.
- Magnetic shielding is used to reduce external magnetic fields (e.g., the earth's) at least 100-fold.
- The Heisenberg uncertainty principle limits the achievable accuracy: $\Delta E \Delta t \geq h/2\pi$, $E = h\nu$, therefore, $\Delta\nu\Delta t \geq 1$, and, long observation time → small frequency uncertainty.
- Resonance linewidth (i.e., 1/Q) is inversely proportional to coherent observation time Δt; Δt is limited by: 1.) when atom enters and leaves the apparatus, and 2.) when the atom stops oscillating due to collisions with other atoms or with container walls (collisions disturb atom's electronic structure).
- In microwave atomic standards, as atoms move with respect to the microwave source, resonance frequency is shifted due to the Doppler effect (**k•v**); velocity distribution results in "Doppler broadening"; the second-order Doppler shift (1/2 v^2/c^2) is due to relativistic time dilation.

6-6

F. G. Major, The Quantum Beat - The Physical Principles of Atomic Clocks, Springer-Verlag, 1998.

J. Vanier and C. Audoin, The Quantum Physics of Atomic Frequency Standards, ISBN 0-85274-434-X, Adam Hilger, 1978.

Rubidium Cell Frequency Standard

Energy level diagrams of ^{85}Rb and ^{87}Rb

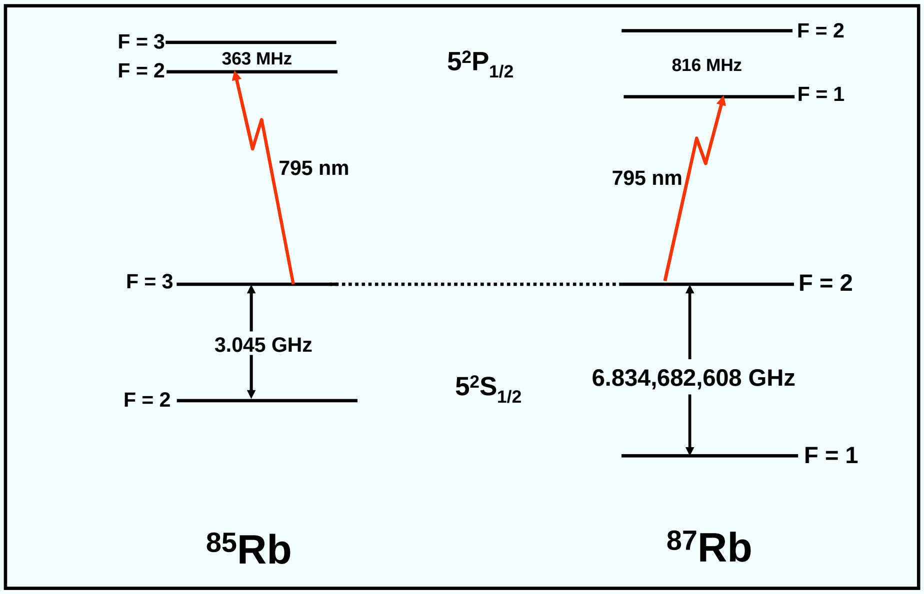

6-7

Referring back to “Generalized Atomic Resonator” earlier in this chapter, the A and B levels for a rubidium standard are the energy levels between the ^{87}Rb F = 1 and F = 2 hyperfine levels of the $5^2S_{1/2}$ ground states. The difference in the energies of those two levels correspond to 6.834,682,608 GHz, which is the atomic resonance frequency utilized in rubidium standards. Initially, about an equal number of atoms are in the two ground states. A nonthermal distribution can be prepared by optical pumping to a third level, the F = 1 excited state of ^{87}Rb, as follows.

A ^{87}Rb discharge lamp emits wavelengths that can pump both the A and B levels to the F = 1 excited state. However, due to the natural coincidence of optical resonance frequencies between ^{85}Rb and ^{87}Rb, both of which correspond to a 795 nm wavelength, a ^{85}Rb filter cell can filter the wavelength corresponding to the transition from the F = 2 ground state of ^{87}Rb. Assuming a perfect filter, the filtered light pumps atoms only from the F = 1 ground state to the excited state, not from the F = 2 ground state. The ^{87}Rb atoms remain in the excited state for a short time only; they emit a photon and return (with about equal probability) to either the A or B ground states. If they return to A, they will be pumped again to the excited state, if they return to B, they will not be pumped. Eventually, all the atoms end up in the level B (F = 2 ground) state. Light from the discharge lamp then passes through the absorption cell without attenuation.

If 6.834,682,608 GHz microwave energy is applied to the atoms, the atoms in level B return to level A (via a spin-flip; see “Hydrogen-Like Atoms,” earlier in this chapter), light is absorbed as the level A atoms are optically pumped, and this light attenuation can be sensed with a photodetector. The microwave frequency can, thereby, be controlled by the dip in the photodetector output, which occurs only when the microwave frequency is at the 6.834,682,608 GHz atomic resonance frequency. When the microwave frequency starts to drift, the change in photodetector output brings the frequency back to the proper frequency, i.e., the microwave frequency is locked to the atomic resonance frequency.

The apparatus that can make all this happen is shown schematically on the next page.

L. L. Lewis, “An Introduction to Frequency Standards,” Proc. IEEE, vol. 79, pp. 927-935, 1991.

H. Hellwig, "Microwave Frequency and Time Standards," in E. A. Gerber and A. Ballato, Precision Frequency Control, Vol. 2, pp. 113-176, Academic Press, 1985.

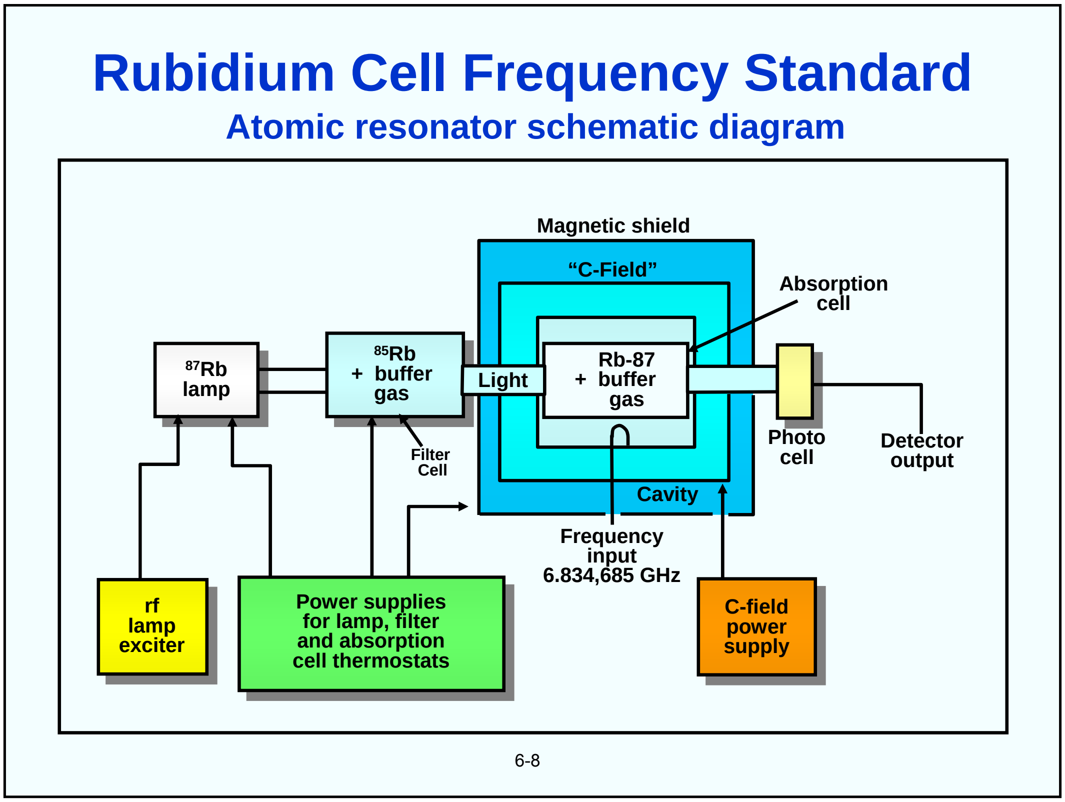

Light from the ^{87}Rb (rf discharge) lamp passes through the ^{85}Rb filter cell and into the absorption cell, which contains ^{87}Rb gas plus a buffer gas. The ^{87}Rb lamp emits wavelengths corresponding to both the ^{87}Rb F = 1 and F = 2 transitions. The ^{85}Rb filter cell absorbs more of the F=2 transition light. The light which passes through the filter cell is absorbed by the ^{87}Rb F=1 state, the excited atoms relax to both the F=1 and F=2 states, but the F=1 states are excited again; the F=2 state is overpopulated; the applied 6.8 GHz microwave converts F=2 back to F=1, which provides more atoms to absorb light. The microwave at the correct resonance frequency causes increased light absorption, i.e., a (< 1%) dip, in the light detected by the photocell. The microwave frequency is locked to photocell detection dip, thus the atomic transition frequency controls the microwave frequency, i.e., the frequency of the crystal oscillator.

The absorption cell contains Rb gas at ~10^{-6} torr and an inert buffer gas at ~1 torr. The Rb atom oscillation lifetime is limited by collisions to ~10^{-2} s; the atomic resonance linewidth ~100 Hz; Q ~5 x 10^7. The buffer gas, a mixture of positive (e.g., N_2) and negative (e.g., Ar) pressure-shift gases, provides zero temperature coefficient at some temperature in the operating temperature range, and confines Rb atoms to a small region to reduce wall-collisions and first order Doppler effects.

F. G. Major, The Quantum Beat - The Physical Principles of Atomic Clocks, Springer-Verlag, 1998.

J. Vanier and C. Audoin, The Quantum Physics of Atomic Frequency Standards, ISBN 0-85274-434-X, Adam Hilger, 1978.

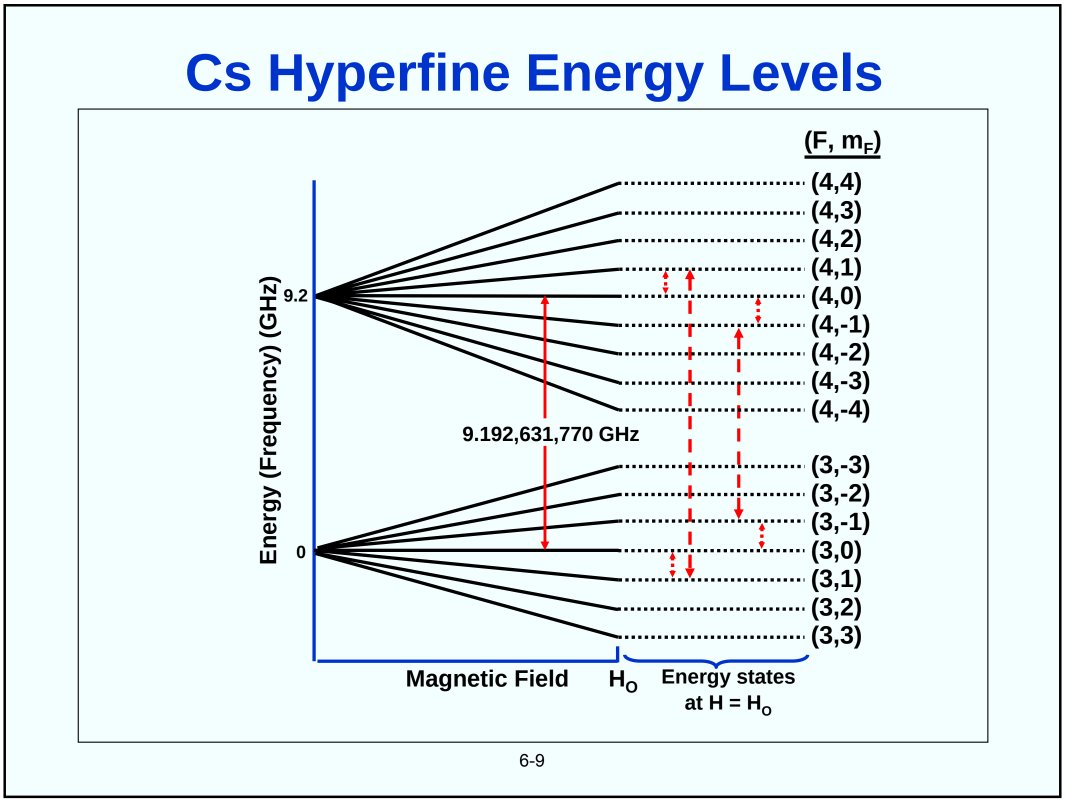

Shown are the magnetic field dependence of the hyperfine energy levels in the ground state of the cesium atom (nine in the upper state, seven in the lower). The magnetic field is plotted up to the value H_O. The solid arrow represents the “clock” transition; the dashed arrows depict the magnetic-field-sensitive (Zeeman) transitions. F is the hyperfine quantum number, and m_F is the magnetic quantum number of the atom. The atomic resonance utilized is at 9,192,631,770 Hz - by definition (of the second*), which corresponds to the (3,0) to (4,0) hyperfine transition, called the clock transition. Referring back to “Generalized Atomic Resonator” earlier in this chapter, the (3,0) and (4,0) levels are the A and B levels.

This (3,0) to (4,0) transition has a small quadratic dependence on magnetic field. The C-field must be stable and uniform; high degree of shielding is required for $\pm 1\times 10^{-13}$/gauss magnetic field sensitivity (e.g., one laboratory Cs standard uses a triple magnetic shield).

It would be desirable to operate at zero magnetic field - all transitions would then behave as a single transition, the signal would be 7X larger, but that would require $< 10^{-8}$ gauss for errors $< 1 \times 10^{-12}$. This is not feasible; a C-field must be applied. A 0.06 gauss C-field separates the sublevels by 40 kHz, and the the (3,0) and (4,0) levels, the level with the minimum magnetic field sensitivity are utilized in making a Cs frequency standard. The way these levels are utilized is shown schematically on the next two pages.

See “Magnetic Field Sensitivities of Atomic Clocks” later in this chapter.

* See “The Second” in chapter 8.

Cesium-Beam Frequency Standard

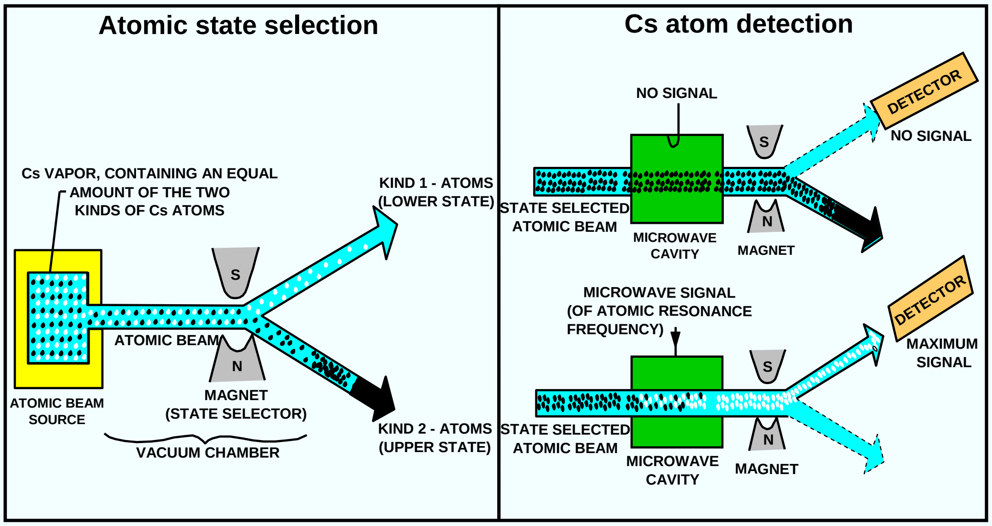

A Cs vapor is generated in the oven, the atoms are collimated, and the beam of Cs atoms are directed to pass through a strongly diverging field of the “A” magnet, the “state-selector” magnet. The force on an atom of magnetic moment μ_i in a magnetic field **B** is

$$\mathbf{F}_i = -\mu_i (\nabla \cdot \mathbf{B})$$

Therefore, the atoms are deflected by amounts that depend on their magnetic moments, i.e., their energy states. The atoms in the (3,0) state are deflected in a different direction than those in the (4,0) state. In this manner, the two types of atoms can be physically separated. The (3,0) and (4,0) levels are the A and B levels, referring back to “Generalized Atomic Resonator” earlier in this chapter,

The state selecting magnet "selects" one of the two atomic levels. The applied microwave at the atomic resonance frequency causes a state change (a spin-flip; see “Hydrogen-Like Atoms,” earlier in this chapter); the second magnet deflects those atoms to the detector which have undergone the state change. The magnets' peak field is ~10 kgauss.

The atom detector is a ribbon or wire (e.g., W or Pt) at ~ 900°C. The Cs atoms are ionized, the ions are collected, the current is amplified and fed back into feedback network. In this way, the microwave frequency is locked to the frequency of maximum ion current, thus the atomic transition frequency controls the microwave frequency, i.e., the frequency of the crystal oscillator.

Much less than 1% of the Cs atoms reach the detector in conventional Cs standards (hence optical pumping's advantage - see “Optically Pumped Cs Standard” later in this chapter.)

F. G. Major, The Quantum Beat - The Physical Principles of Atomic Clocks, Springer-Verlag, 1998.

J. Vanier and C. Audoin, The Quantum Physics of Atomic Frequency Standards, ISBN 0-85274-434-X, Adam Hilger, 1978.

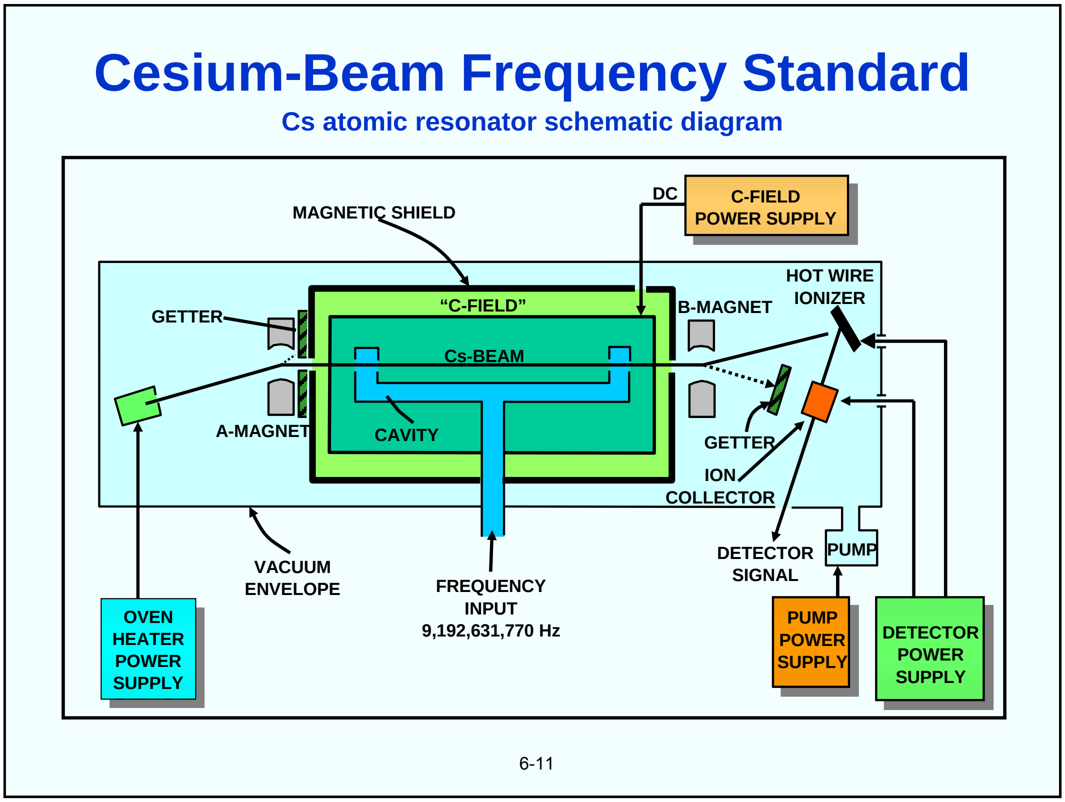

The A magnet selects one of the states, say the kind 2 state, which is deflected downward by the magnets A and B. (Atoms in the kind 1 state would be deflected upward.) As long as the atoms selected remain in the kind 2 state, none of them reach the hot-wire ionizer detector. However, if microwaves of frequency 9.192,631,770 GHz are applied to the Cs beam, the atoms that absorb this frequency undergo a transition and become a kind 1 atom. The B magnet deflects these atoms upward to the ionizer. The electrical current generated in the ionizer is proportional to the number of atoms that make the microwave induced transitions. Thus the microwave frequency can be locked to the value that produces the maximum current.

The oven is at ~100°C, the Cs pressure in the oven is ~10^{-3} torr, the cavity is at ~10^{-9} torr; the typical average atom speed is 100 m/s; the typical cavity length in commercial standards is 10 to 20 cm; the interaction time is ~1 to 2 x 10^{-3} s; the linewidth is ~0.5 to 1 kHz; the Q ~ 10^7; in standard laboratories, the cavity length is ~4 meters and the Q ~ 10^8.

Cs standards are more accurate than Rb standards because the Cs atoms pass through a high-vacuum region without collisions with buffer gas molecules or walls which cause frequency instabilities in Rb standards. Instead of confining the atoms to a small cell, as is done in Rb standards, the Cs atoms travel through a relatively long microwave cavity. Cs standards also use the Ramsey separated field method which further narrows the atomic resonance linewidth - see the references for details.

H. Hellwig, "Frequency Standards and Clocks: A Tutorial Introduction," NBS Technical Note 616, 1977, Time and Frequency Division, NIST, 325 Broadway, Boulder, Colorado, 80303.

H. Hellwig, "Microwave Frequency and Time Standards," in E. A. Gerber and A. Ballato, Precision Frequency Control, Vol. 2, pp. 113-176, Academic Press, 1985.

L. L. Lewis, "An Introduction to Frequency Standards," Proc. IEEE, vol. 79, pp. 927-935, 1991.

Atomic Hydrogen Energy Levels

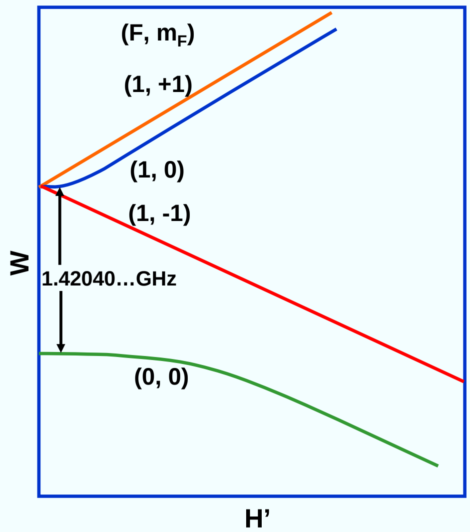

Ground state energy levels of atomic hydrogen as a function of magnetic field H'.

6-12

The above figure shows the relevant energy levels of a hydrogen atom in a magnetic field. The hydrogen maser (H-maser) operates on the nearly field independent (at low fields) hyperfine transition between the (1,0) and (0,0) states. The energy difference between these two states corresponds to a 1,420,405,752 Hz frequency (21 cm wavelength).

There are two types of hydrogen masers, active and passive. In the active maser, the 1.42 GHz output signal is obtained directly from stimulated radiation by the H atoms ("maser" was originally an abbreviation for <u>m</u>icrowave <u>a</u>mplification by <u>s</u>timulated <u>e</u>mission of <u>r</u>adiation). In the passive H-maser, as in all passive atomic standards, a microwave oscillator stimulates the desired atomic transitions and a control loop provides feedback to tune a quartz oscillator to the frequency that maximizes the transition rate.

H. Hellwig, "Microwave Frequency and Time Standards," in E. A. Gerber and A. Ballato, <u>Precision Frequency Control</u>, Vol. 2, pp. 113-176, Academic Press, 1985.

L. L. Lewis, "An Introduction to Frequency Standards," Proc. IEEE, vol. 79, pp. 927-935, 1991.

Passive H-Maser Schematic Diagram

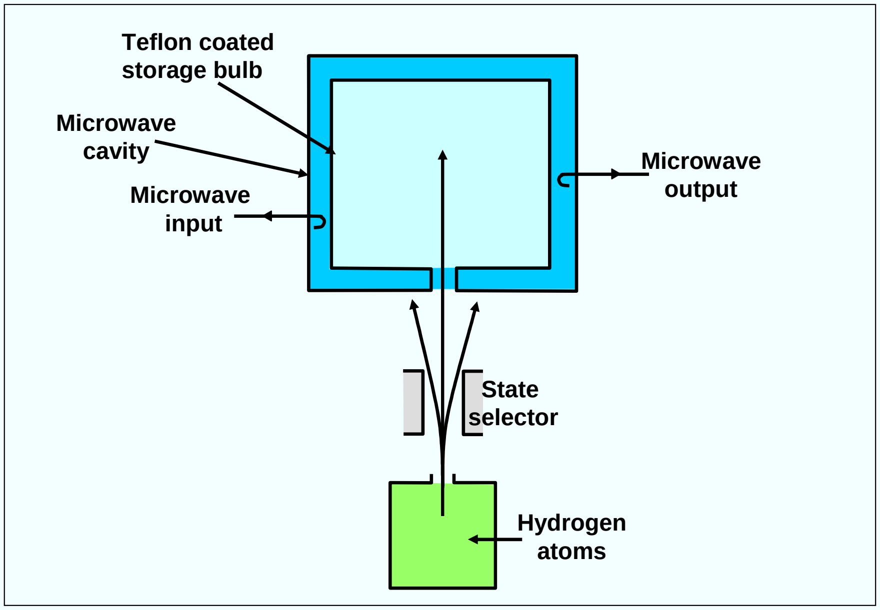

6-13

In a H-maser, molecular hydrogen is dissociated by an electrical discharge, and the resulting atomic hydrogen is collimated into a beam. As is done in the Cs standard, an inhomogeneous magnetic field is used to separate, i.e., "state-select," atomic states. The maser cavity is coated with Teflon to minimize atomic perturbations due to collisions with the cavity wall.

A frequency modulated 1.42…GHz microwave signal is passed through the cavity to interrogate the atoms. As the microwaves induce atomic transitions, the atoms emit 1.42…GHz radiation. In active masers, this 1.42…GHz is detected and is used directly. In passive standards, the applied modulated microwave signal interacts with the atomic resonance line's frequency. A phase shift of the carrier frequency results, as well as an AM signal at the modulation frequency which is proportional to the offset of the carrier frequency from the atomic resonance frequency. The AM is detected and is used to tune a quartz oscillator so that the center of the carrier frequency coincides with the atomic resonance frequency.

Because of their superior resonance line Q ($\sim 10^9$), H-masers have short term stabilities that are superior to those of Cs and Rb standards. Stabilities of $<10^{-15}$ at the noise floor and $<10^{-14}$ at one day have been reported. H-masers are the principal clocks used for radio astronomy, where the clocks must stay coherent to a small fraction of a radio frequency cycle during the observation period (minutes to hours). The large size of most hydrogen masers (typical active hydrogen masers are ten times the volume of commercial Cs frequency standards) results from the 1.4 GHz microwave cavity and the surrounding layers of magnetic shielding and temperature-stabilizing ovens. Hydrogen masers are not primary standards; they typically exhibit frequency aging of 1 to 10 X 10^{-12} per year.

H. Hellwig, "Microwave Frequency and Time Standards," in E. A. Gerber and A. Ballato, Precision Frequency Control, Vol. 2, pp. 113-176, Academic Press, 1985.

S. R. Stein and J. R. Vig, "Frequency Standards for Communications," U. S. Army Laboratory Command Research and Development Technical Report SLCET-TR-91-2 (Rev. 1), October 1991, AD-A243211. This report is a reprint of a chapter "Communications Frequency Standards," in The Froehlich/Kent Encyclopedia of Telecommunications, Vol. 3, pp. 445-500, Marcel Dekker, Inc., 1992.

T. E. Parker, "Environmental Factors and Hydrogen Maser Frequency Stability," IEEE Trans. UFFC, vol. 46, pp. 745-751, 1999.

Atomic Resonator Instabilities

- **Noise** - due to the circuitry, crystal resonator, and atomic resonator. (See next page.)
- **Cavity pulling** - microwave cavity is also a resonator; atoms and cavity behave as two coupled oscillators; effect can be minimized by tuning the cavity to the atomic resonance frequency, and by maximizing the atomic resonance Q to cavity Q ratio.
- **Collisions** - cause frequency shifts and shortening of oscillation duration.
- **Doppler effects** - 1st order is classical, can be minimized by design; 2nd order is relativistic; can be minimized by slowing the atoms via laser cooling - see "Laser Cooling of Atoms" later in this chapter.
- **Magnetic field** - this is the only influence that directly affects the atomic resonance frequency.
- **Microwave spectrum** - asymmetric frequency distribution causes frequency pulling; can be made negligible through proper design.
- **Environmental effects** - magnetic field changes, temperature changes, vibration, shock, radiation, atmospheric pressure changes, and He permeation into Rb bulbs.

H. Hellwig, "Microwave Frequency and Time Standards," in E. A. Gerber and A. Ballato, Precision Frequency Control, Vol. 2, pp. 113-176, Academic Press, 1985

Noise in Atomic Frequency Standards

If the time constant for the atomic-to-crystal servo-loop is t_o, then at $\tau < t_o$, the crystal oscillator determines $\sigma_y(\tau)$, i.e., $\sigma_y(\tau) \sim \tau^{-1}$. From $\tau > t_o$ to the τ where the "flicker floor" begins, variations in the atomic beam intensity (shot-noise) determine $\sigma_y(\tau)$, and $\sigma_y(\tau) \sim (i\tau)^{-1/2}$, where i = number of signal events per second. Shot noise within the feedback loop shows up as white frequency noise (random walk of phase). Shot noise is generally present in any electronic device (vacuum tube, transistor, photodetector, etc.) where discrete particles (electrons, atoms) move across a potential barrier in a random way.

In commercial standards, t_o ranges from 0.01 s for a small Rb standard to 60 s for a high-performance Cs standard. In the regions where $\sigma_y(\tau)$ varies as τ^{-1} and $\tau^{-1/2}$, $\sigma_y(\tau) \propto (QS_R)^{-1}$, where S_R is the signal-to-noise ratio, i.e., the higher the Q and the signal-to-noise ratio, the better the short term stability (and the phase noise far from the carrier, in the frequency domain).

-

Short-Term Stability of a Cs Standard

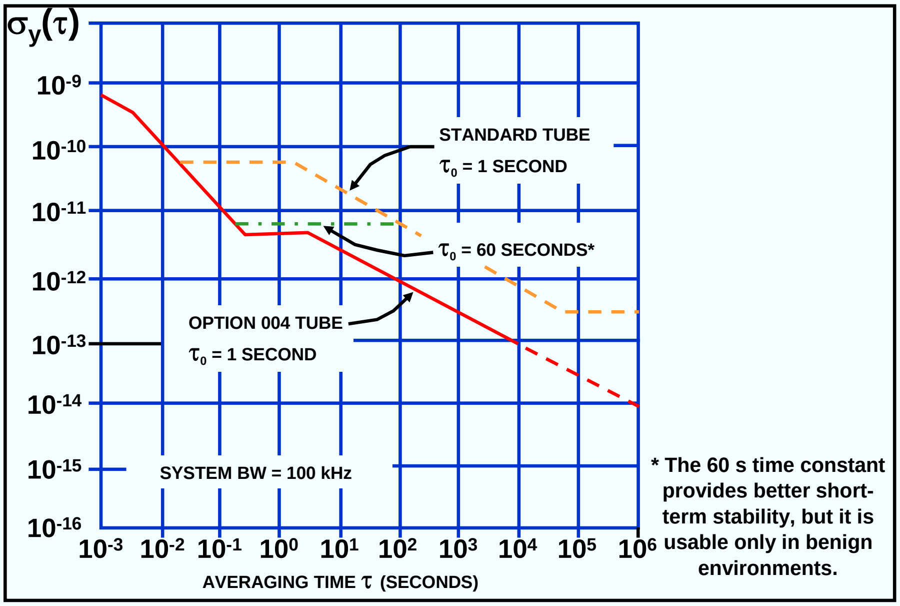

6-16

-Hewlett-Packard 5061B Data Sheet (Pub. 5952-7912D), Hewlett-Packard Co.

Short-Term Stability of a Rb Standard

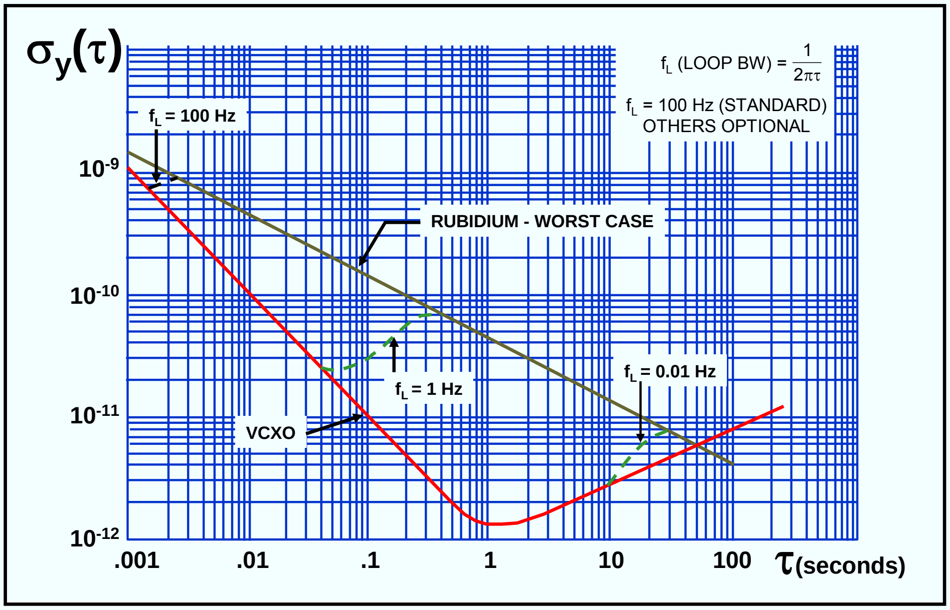

Rubidium Atomic Frequency Standard, Model FE-5600A data sheet, Frequency Electronics, Inc., 55 Charles Lindbergh Blvd., Mitchel Field, NY 11553.

Acceleration Sensitivity of Atomic Standards

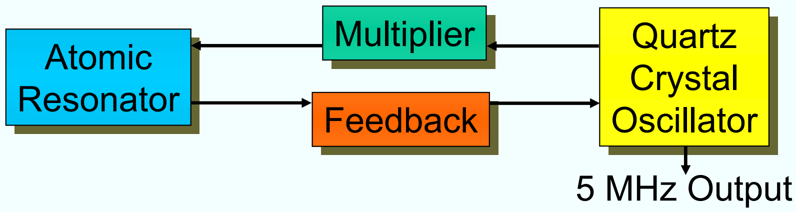

Let the servo loop time constant = t_0, let the atomic standard's $\Gamma = \Gamma_A$, and the crystal oscillator's (VCXO's) $\Gamma = \Gamma_O$. Then,

- For fast acceleration changes ($f_{vib} >> 1/2\pi t_0$), $\Gamma_A = \Gamma_O$
- For slow acceleration changes, ($f_{vib} << 1/2\pi t_0$), $\Gamma_A << \Gamma_O$
- For $f_{vib} \approx f_{mod}$, $2f_{mod}$, servo is confused, $\Gamma_A \approx \Gamma_O$, plus a frequency offset
- For small f_{vib}, (at Bessel function null), loss of lock, $\Gamma_A \approx \Gamma_O$

J. R. Vig, C. Audoin, L. S. Cutler, M. M. Driscoll, E. P. EerNisse, R. L. Filler, R. M. Garvey, W. L. Riley, R. C. Smythe, and R. D. Weglein, "Acceleration, Vibration and Shock Effects - IEEE Standards Project P1193," Proc. 1992 IEEE Frequency Control Symposium, 763-781, 1992.

Atomic Standard Acceleration Effects

In Rb cell standards, high acceleration can cause Δf due to light shift, power shift, and servo effects:

- Location of molten Rb in the Rb lamp can shift
- Mechanical changes can deflect light beam
- Mechanical changes can cause rf power changes

In Cs beam standards, high acceleration can cause Δf due to changes in the atomic trajectory with respect to the tube & microwave cavity structures:

- Vibration modulates the amplitude of the detected signal. Worst when $f_{vib} = f_{mod}$.
- Beam to cavity position change causes cavity phase shift effects
- Velocity distribution of Cs atoms can change
- Rocking effect can cause Δf even when $f_{vib} < f_{mod}$

In H-masers, cavity deformation causes Δf due to cavity pulling effect

6-19

J. R. Vig, C. Audoin, L. S. Cutler, M. M. Driscoll, E. P. EerNisse, R. L. Filler, R. M. Garvey, W. L. Riley, R. C. Smythe, and R. D. Weglein, "Acceleration, Vibration and Shock Effects - IEEE Standards Project P1193," Proc. 1992 IEEE Frequency Control Symposium, 763-781, 1992.

Magnetic Field Sensitivities of Atomic Clocks

Clock transition frequency $\nu = \nu_o + C_H H_o^2$, where C_H is the quadratic Zeeman effect coefficient (which varies as $1/\nu_o$).

Atom	Transition Frequency	C-field* (milligauss)**	Shielding Factor*	Sensitivity per gauss**
Rb	ν=6.8 GHz + (574 Hz/G^2) B_o^2	250	5k	10^{-11}
Cs	ν=9.2 GHz + (427 Hz/G^2) B_o^2	60	50k	10^{-13}
H	ν=1.4 GHz + (2750 Hz/G^2) B_o^2	0.5	50k	10^{-13}

* Typical values
** 1 gauss = 10^{-4} Tesla; Tesla is the SI unit of magnetic flux density.

-

Crystal's Influences on Atomic Standard

- **Short term stability** - for averaging times less than the atomic-to-crystal servo loop time constant, τ_L, the crystal oscillator determines $\sigma_y(\tau)$.
- **Loss of lock** - caused by large phase excursions in $t < \tau_L$ (due to shock, attitude change, vibration, thermal transient, radiation pulse). At a Rb standard's 6.8 GHz, for a $\Delta f = 1 \times 10^{-9}$ in 1s, as in a 2g tipover in 1s, $\Delta\phi \sim 7\pi$. Control voltage sweeping during reacquisition attempt can cause the phase and frequency to change wildly.
- **Maintenance or end of life** - when crystal oscillator frequency offset due to aging approaches EFC range (typically ~ 1 to 2 x 10^{-7}).
- **Long term stability** - noise at second harmonic of modulation f causes time varying Δf's; this effect is significant only in the highest stability (e.g., H and Hg) standards.

-

Optically Pumped Cs Standard

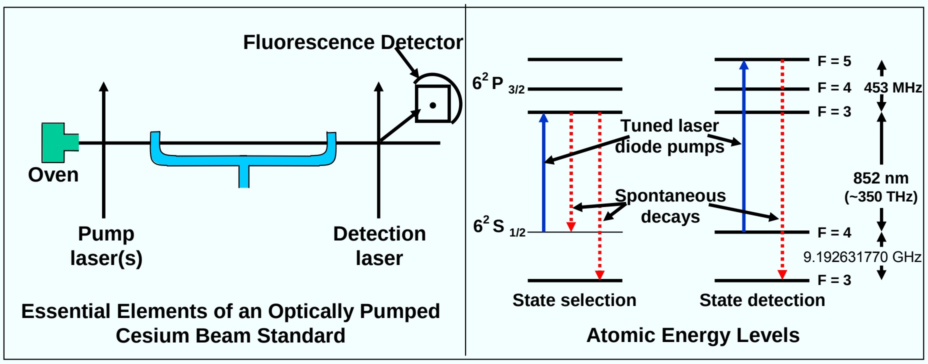

The proper atomic energy levels are populated by optical pumping with a laser diode. This method provides superior utilization of Cs atoms, and provides the potential advantages of: higher S/N, longer life, lower weight, and the possibility of trading off size for accuracy. A miniature Cs standard of 1×10^{-11} accuracy, and <<1 liter volume, i.e., about 100x higher accuracy than a Rb standard, in a smaller volume (but not necessarily the same shape factor) seems possible.

6-22

The optical pumping technique manipulates the populations in the hyperfine levels of the ground state by exciting transitions to higher principal quantum states with infrared, or higher frequency, light. As shown above, the atoms in one hyperfine level are excited optically to a higher state from which they decay spontaneously to both ground state hyperfine levels. The population of the hyperfine state involved in the stimulated transition is rapidly depleted; the population of the second hyperfine level is enhanced. Microwaves applied at the 9.192…GHz frequency can be locked to the atomic transition frequency, as in a Cs beam standard.

Optical pumping has both advantages and disadvantages compared to magnetic state selection. On the positive side, it can be accomplished in a more compact device and it can enhance the number of atoms in the desired state rather than just rejecting the atoms in the undesired state. On the negative side are increases in complexity, the difficulty of obtaining laser diodes at the proper frequency and with suitable stability (as of 1999), and some additional performance-degrading mechanisms.

Optical pumping can eliminate the need for state-selection magnets, and result in a larger number of atoms contributing to the signal which results in a superior signal-to-noise ratio. In addition, the spatial symmetry of the optical pumping reduces certain frequency shifts.

L. L. Lewis, "Miniature Optically Pumped Cesium Standards," Proc. 45th Ann. Symp. on Frequency Control, pp. 521-533, 1991.

P. J. Chantry, B. R. McAvoy, J. M. Zomp, and I. Liberman, "Towards A Miniature Laser-pumped Cesium Cell Frequency Standard," Proc. 1992 IEEE Int'l Frequency Control Symp., pp. 114-122, 1992.

P. J. Chantry, I. Liberman, et. al, "Miniature Laser Pumped Cesium Cell Atomic Clock Oscillator," Proc. 1996 IEEE Int'l Frequency Control Symp., pp. 1002-1010, 1996.

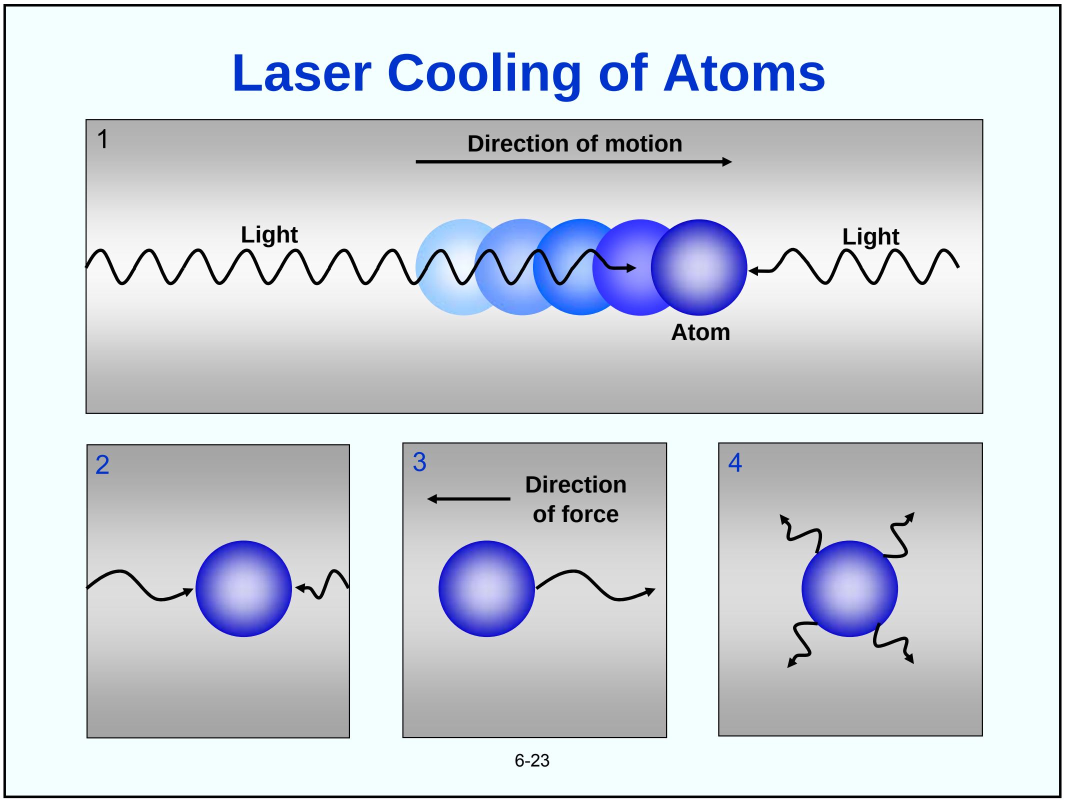

Laser cooling of atoms can create atoms that move very slowly (equivalent to temperatures of microkelvins). This allows long observation times. The slow speed virtually eliminates Doppler shifts, and the long observation times allow high accuracy determinations of atomic transition frequencies, per the Heisenberg uncertainty principle, i.e., $\Delta E \Delta t \sim h$ and $E = h\nu$, so $\Delta\ \nu \sim 1/\Delta t$. Laser cooling promises frequency accuracies of parts in 10^{16}. The explanation of laser cooling is as follows. The numbers correspond to the numbers in the illustration above:

1. Consider two rays of light that bombard an atom. One ray travels in the same direction as the atom,; the other moves in the opposite direction. The frequency of the light is slightly lower than the frequency that the atom readily absorbs.

2. From the atom's perspective, the ray moving in the same direction as the atom is shifted down in frequency; the other ray is shifted up in frequency.

3. The atom is likely to absorb the high-frequency light but not the low. It is therefore pushed in a direction opposite its motion and slows down.

4. The emission of the absorbed light pushes the atom in some random direction, but if the process is repeated many times, the emission exerts no net force.

Chu, Steven, "Laser Trapping of Neutral Particles," Scientific American, February 1992, pp. 71-76.

Rubidium - Crystal Oscillator (RbXO)

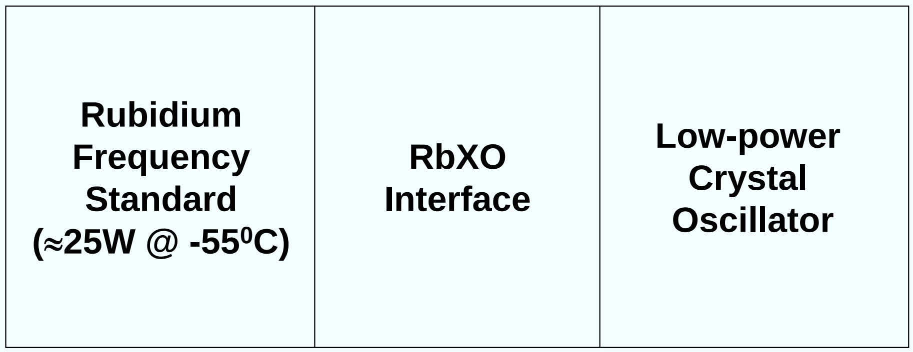

The RbXO provides “the best of both worlds” - the long term stability of a Rb standard and the low power of a crystal oscillator. Occasionally, power is applied to the Rb standard for a few minutes. Upon warmup of the Rb standard, the RbXO interface syntonizes the crystal oscillator and cuts off power to the Rb standard. When the crystal oscillator is an MCXO (see chapter 2), the MCXO digital circuit can include the RbXO interface, and the average RbXO power consumption can be less than 100 mW.

J. R. Vig and V. J. Rosati, "The Rubidium-Crystal Oscillator Hybrid Development Program," Proceedings of the 16th Annual PTTI Applications and Planning Meeting, pp. 157-165, 1984, NTIS Accession No. N85-29221/7.

W. J. Riley, Jr. and J. R. Vaccaro, "A Rubidium-Crystal Oscillator (RbXO)," IEEE Transactions on Ultrasonics, Ferroelectrics, and Frequency Control, Vol. UFFC-34, No. 6, pp. 612-618, November 1987.

RbXO Principle of Operation

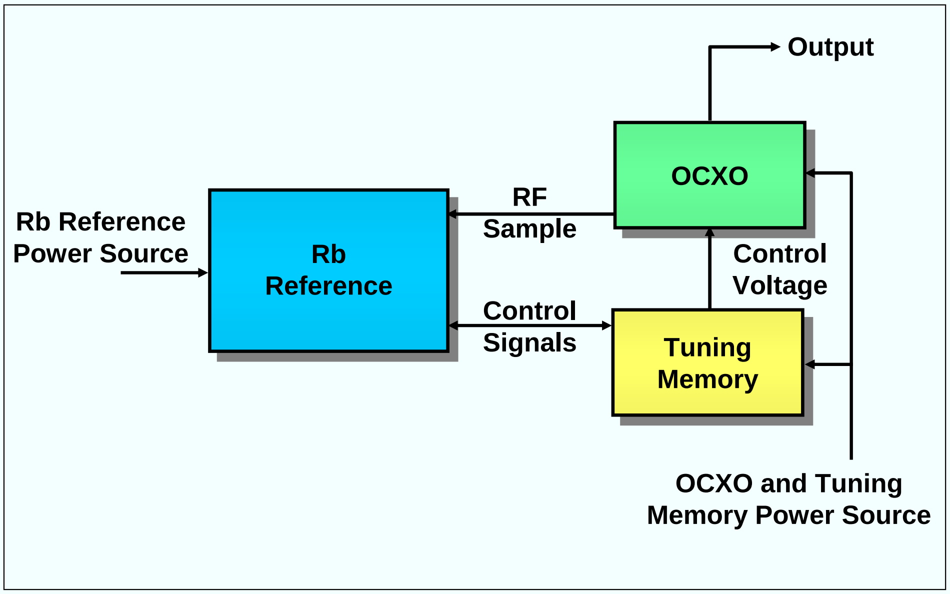

6-25

The Rb reference is a miniature Rb frequency standard (RFS) that has been modified to control an external crystal oscillator. The OCXO includes a digital tuning memory to hold the frequency control voltage while the Rb reference is off. The OCXO is ON continually. At specified intervals, the system applies power to the RFS. After the warmup of the RFS (a few minutes), the interface circuits adjust the frequency of the OCXO to the RFS reference, then shut off the RFS. For portable applications, the OCXO can be separable from the rest of the RbXO (see the next page) so that one can operate with minimum size, weight, and power, and with nearly the accuracy of the RFS for the duration of a mission. An MCXO can be used for even lower power consumption.

W. J. Riley, Jr. and J. R. Vaccaro, "A Rubidium-Crystal Oscillator (RbXO)," IEEE Transactions on Ultrasonics, Ferroelectrics, and Frequency Control, Vol. UFFC-34, No. 6, pp. 612-618, November 1987.

Rubidium Crystal Oscillator

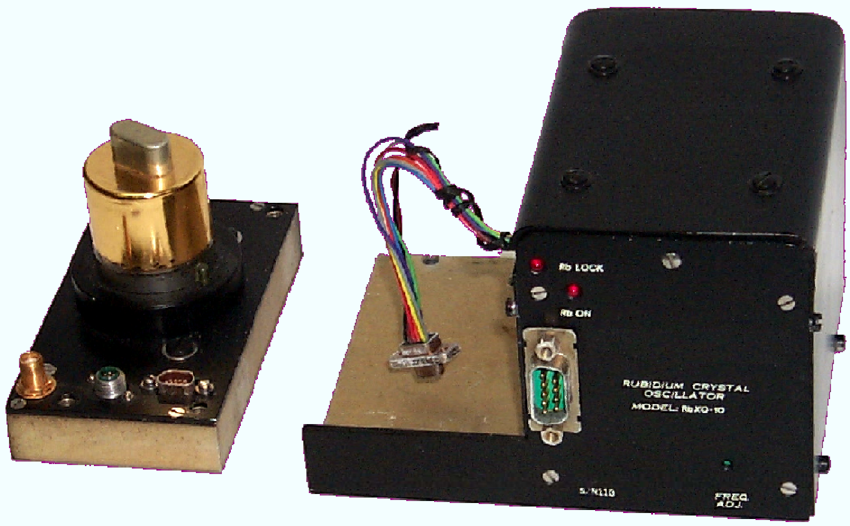

Shown above is one implementation of the RbXO - in which the OCXO is detachable.

W. J. Riley, Jr. and J. R. Vaccaro, "A Rubidium-Crystal Oscillator (RbXO)," IEEE Transactions on Ultrasonics, Ferroelectrics, and Frequency Control, Vol. UFFC-34, No. 6, pp. 612-618, November 1987.

CHAPTER 7
Oscillator Comparisons and Specifications

7

A listing of "Specifications and Standards Relevant to Frequency Control," appears in the back pages of the Proceedings of the IEEE Frequency Control Symposium - see the proceedings ordering information in chapter 10.

E. Hafner, "Specifications and Standards," in E. A. Gerber and A. Ballato, Precision Frequency Control, Vol. 2, pp. 297-304, Academic Press, 1985.

S. R. Stein and J. R. Vig, "Frequency Standards for Communications," U. S. Army Laboratory Command Research and Development Technical Report SLCET-TR-91-2 (Rev. 1), October 1991, AD-A243211. This report is a reprint of a chapter "Communications Frequency Standards," in The Froehlich/Kent Encyclopedia of Telecommunications, Vol. 3, pp. 445-500, Marcel Dekker, Inc., 1992.

Oscillator Comparison

	Quartz Oscillators			Atomic Oscillators		
	TCXO	MCXO	OCXO	Rubidium	RbXO	Cesium
Accuracy * (per year)	2×10^{-6}	5×10^{-8}	1×10^{-8}	5×10^{-10}	7×10^{-10}	2×10^{-11}
Aging/Year	5×10^{-7}	2×10^{-8}	5×10^{-9}	2×10^{-10}	2×10^{-10}	0
Temp. Stab. (range, ^{0}C)	5×10^{-7} (-55 to +85)	3×10^{-8} (-55 to +85)	1×10^{-9} (-55 to +85)	3×10^{-10} (-55 to +68)	5×10^{-10} (-55 to +85)	2×10^{-11} (-28 to +65)
Stability, $\sigma_y(\tau)$ (τ = 1s)	1×10^{-9}	3×10^{-10}	1×10^{-12}	3×10^{-12}	5×10^{-12}	5×10^{-11}
Size (cm^3)	10	30	20-200	200-800	1,000	6,000
Warmup Time (min)	0.03 (to 1×10^{-6})	0.03 (to 2×10^{-8})	4 (to 1×10^{-8})	3 (to 5×10^{-10})	3 (to 5×10^{-10})	20 (to 2×10^{-11})
Power (W) (at lowest temp.)	0.04	0.04	0.6	20	0.65	30
Price (~$)	10 - 100	<1,000	200-2,000	2,000-8,000	<10,000	50,000

* Including environmental effects (note that the temperature ranges for Rb and Cs are narrower than for quartz).

The specifications in this table are typical for oscillators made for a wide temperature range. Laboratory standards that are designed to operate in a benign environment can perform better. This is especially true for laboratory cesium standards, the accuracy of which can be >100x better than what is shown above.

Clock Accuracy vs. Power Requirement*

(Goal of R&D is to move technologies toward the upper left)

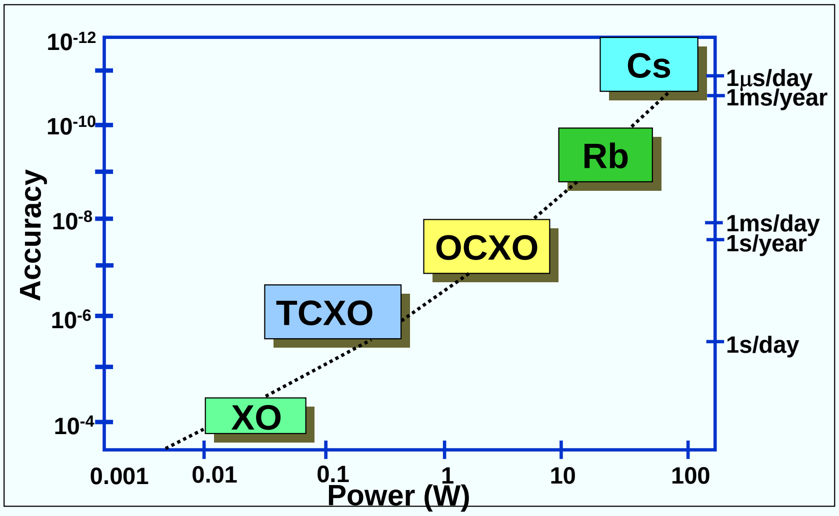

* Accuracy vs, size, and accuracy vs. cost have similar relationships

7-2

Commercially available frequency sources cover an accuracy range of several orders of magnitude - from the simple XO to the cesium-beam frequency standard. As the accuracy increases, so does the power requirement, size, and cost. Shown above is the relationship between accuracy and power requirement. (Note that it is a log-log scale.) Accuracy versus cost would be a similar relationship, ranging from about $1 for a simple XO to about $40,000 for a cesium standard (1997 prices).

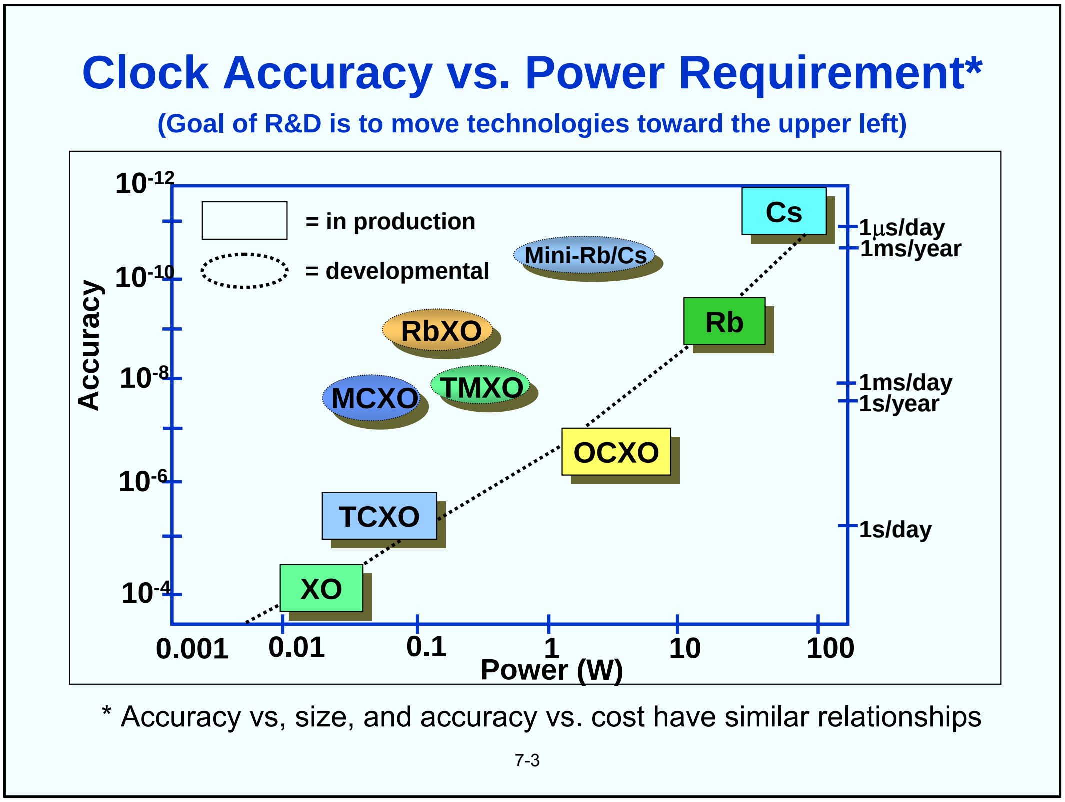

Shown above is the relationship between accuracy and power requirement for the major classes of frequency standards, and for some developmental standards. The accuracies shown are for wide temperature range devices, and include environmental effects and one year of aging. Laboratory standards, (e.g., the best available cesium standard) have higher accuracies.

Power availability often limits the available options. For example, small, handheld devices are limited to XO, TCXO or MCXO.

The MCXO and RbXO were discussed earlier. One version of a miniature Cs standard is discussed at “Optically Pumped Cs Standard,” in chapter 6. Other versions of miniature Rb and Cs standards, e.g., using coherent population trapping (CPT), promise to allow small, low power atomic standards in the future. The TMXO was the Tactical Miniature Crystal Oscillator, was an experimental <20 cm^3, low-power (300 mW @-40ºC, vacuum insulated) OCXO. Similar size OCXOs are now available commercially.

J. Messina, D. Bowman, R. Filler, R. Lindenmuth, V. Rosati, S. Schodowski, “Results Of Long Term Testing Of Tactical Miniature Crystal Oscillators,” Proc. 43rd Annual Symposium on Frequency Control, pp. 47-50, 1989.

Battery Life vs. Oscillator Power

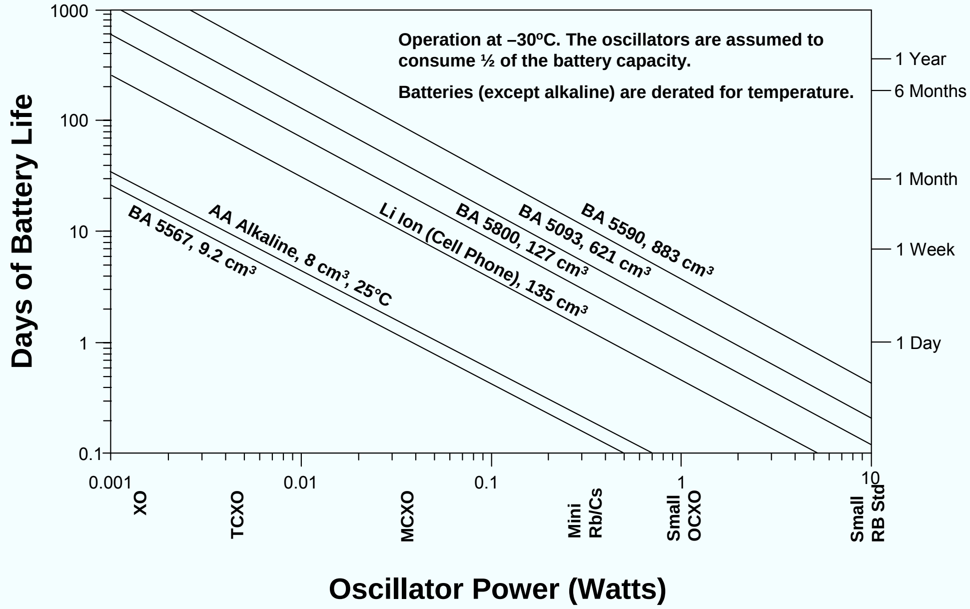

7-4

Clock is assumed to run continuously. In most instances, even when the equipment is OFF, the clock continues to operate.

Curves are approximations and should not be used for design. Although the curves show battery lifetime derated for temperature, at very low current drains, most of the battery's energy can be recovered. For example, a D-sized Li SO_2 battery at -40°C retains about 50% of its maximum capacity when providing 0.5A (1.5 W) , 65% of its capacity when providing 0.1A (300 mW), and 85% of its capacity when providing 0.01A (30 mW)." Conversely, at at high current drain, the batteries deliver less than 50% of capacity. When these factors are taken into account, the curves rise at the left (i.e., at low current drain) and curve downward at the right.

D-cell capacity is equivalent to the Li-Ion cell shown on the chart.

The AA alkaline battery WAS NOT derated for temperature because at –30°C the battery is virtually useless.

BA batteries are lithium/sulfur dioxide type.

The "mini Rb/Cs" power is the goal of a development program; no such atomic standard exists as of 2001.

David Linden, ed., Handbook of Batteries and Fuel Cells, McGraw-Hill Book Co., pp. 11-21 to 11-30, 1984.

The above chart was prepared April, 2001, by Yoonkee Kim and Vince Rosati, using Sigma Plot to generate the graph, which was imported into Power Point by Vaughn Skidmore.

Short Term Stability Ranges of Various Frequency Standards

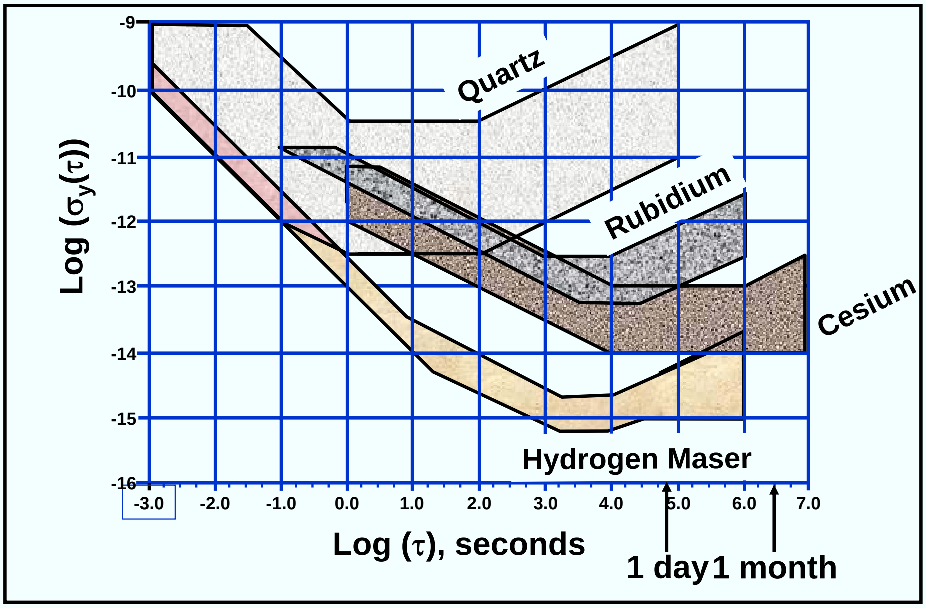

7-5

The above graph is based on one prepared and provided by Richard Sydnor, Jet Propulsion Laboratory, 1989.

Phase Instabilities of Various Frequency Standards

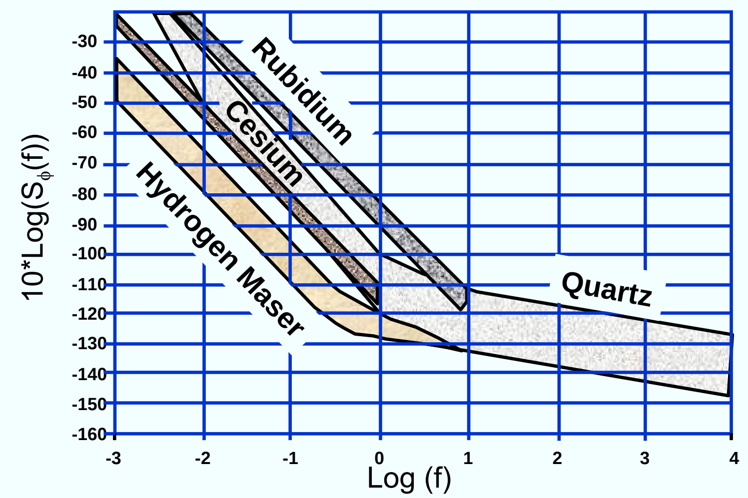

Typical one-sided spectral density of phase deviation vs. offset frequency, for various standards, calculated at 5 MHz. $L(f) = \frac{1}{2} S_\phi$

The above graph is based on one prepared and provided by Richard Sydnor, Jet Propulsion Laboratory, 1989.

Weaknesses and Wearout Mechanisms

	Weaknesses	Wearout Mechanisms
Quartz	Aging Rad hardness	None
Rubidium	Life Power Weight	Rubidium depletion Buffer gas depletion Glass contaminants
Cesium	Life Power Weight Cost Temp. range	Cesium supply depletion Spent cesium gettering Ion pump capacity Electron multiplier

See also "Why Do Crystal Oscillators Fail?" on the next page.

The wearout mechanisms listed for Rb standards have become less of a problem in recent years than they were when early GPS satellites failed due to the failure of on-board atomic clocks.

D. Ringer, H. Bethke, and M. Van Melle, "Rubidium and Cesium Frequency Standards - Status and Performance on the GPS Program," Proc. 16th Precise Time and Time Interval (PTTI) Applications and Planning Meeting, pp. 127-141, 1986, NTIS Accession no. N85-29221/7.

M. J. Van Melle, "Cesium and Rubidium Frequency Standards Status and Performance on the GPS Program," Proc. 27th Precise Time and Time Interval (PTTI) Applications and Planning Meeting, pp. 167-180, 1995, NASA Conference Publication 3334.

Lt. R. E. Bower, G. L. Dieter, and M. J. Van Melle,"SVN 20 End-Of-Life Frequency Standard Test Results," Proc. 29th Precise Time and Time Interval (PTTI) Applications and Planning Meeting, pp. 181- , 1997.

PTTI Proc. Availability information: <http://tycho.usno.navy.mil/ptti/orderform.html>

Why Do Crystal Oscillators Fail?

Crystal oscillators have no **inherent** failure mechanisms. Some have operated for decades without failure. Oscillators do fail (go out of spec.) occasionally for reasons such as:

- Poor workmanship & quality control - e.g., wires come loose at poor quality solder joints, leaks into the enclosure, and random failure of components
- Frequency ages to outside the calibration range due to high aging plus insufficient tuning range
- TCXO frequency vs. temperature characteristic degrades due to aging and the "trim effect".
- OCXO frequency vs. temperature characteristic degrades due to shift of oven set point.
- Oscillation stops, or frequency shifts out of range or becomes noisy at certain temperatures, due to activity dips
- Oscillation stops or frequency shifts out of range when exposed to ionizing radiation - due to use of unswept quartz or poor choice of circuit components
- Oscillator noise exceeds specifications due to vibration induced noise
- Crystal breaks under shock due to insufficient surface finish

Aging, trim effect, oven instability effects, activity dips, vibration-induced noise effects, shock effects, and other instabilities are discussed in chapter 4.

Oscillator Selection Considerations

- Frequency accuracy or reproducibility requirement
- Recalibration interval
- Environmental extremes
- Power availability - must it operate from batteries?
- Allowable warmup time
- Short term stability (phase noise) requirements
- Size and weight constraints
- Cost to be minimized - acquisition or life cycle cost

In relation to the last item, i.e., what cost is to be minimized, the initial acquisition cost or the life-cycle cost, often, the cost of recalibration is far higher than the added cost of an oscillator that can provide calibration-free life. A better oscillator may also allow simplification of the system's design.

The frequency of the oscillator can be another important consideration, because the choice can have an impact on both cost and performance. Everything else being equal, an oscillator of standard frequency, such as 5 MHz or 10 MHz, will cost less than one of an unusual frequency, such as 8.34289 MHz. Moreover, for thickness-shear crystals, such as the AT-cut and SC-cut, the lower the frequency, the lower the aging. Since at frequencies much below 5 MHz thickness-shear crystals become too large for economical manufacturing, and since all the highest stability oscillators use thickness-shear crystals, the highest stability commercially available oscillator's frequency is 5 MHz. Such oscillators will also have the lowest phase-noise capability close to the carrier. There are also some excellent 10 MHz oscillators on the market; however, oscillators of much higher frequency than 10 MHz usually have higher aging rates and phase-noise levels close to the carrier than do 5 MHz oscillators. For lowest phase-noise far from the carrier, where the signal-to-noise ratio in the sustaining circuit determines the noise level, higher frequency crystals (e.g., 100 MHz) can provide lower noise because such crystals can tolerate higher drive levels, thereby allowing higher signal levels.

When resonator size is an issue, higher frequency resonators are generally smaller than lower frequency resonators (of the same type). For example, a 100 MHz 5th overtone resonator is substantially smaller than a 5 MHz 5th overtone unit. On the other hand, a 32 kHz watch crystal is much smaller than either.

Crystal Oscillator Specification: MIL-PRF-55310

MIL-PRF-55310D
15 March 1998

SUPERSEDING
MIL-0-55310C
15 Mar 1994

PERFORMANCE SPECIFICATION

OSCILLATOR, CRYSTAL CONTROLLED

GENERAL SPECIFICATION FOR

This specification is approved for use by all Departments and Agencies of the Department of Defense.

1. SCOPE

1.1 Statement of scope. This specification covers the general requirements for quartz crystal oscillators used in electronic equipment.

Full text version is available via a link from <http:\\www.ieee.org/uffc/fc>

This document is a good guide for preparing oscillator specifications, whether it be an oscillator for a military or a civilian application, and whether it be a quartz or atomic oscillator.

The complete MIL-PRF-55310 is available on the Internet via a link from <http:\\www.ieee.org/uffc/fc>, or directly, from <http://www.dscc.dla.mil/Programs/MilSpec/ListDocs.asp?BasicDoc=MIL-PRF-55310>

Copies of MIL-PRF-55310 are also available by mail from: Military Specifications and Standards, Bldg. 4D, 700 Robbins Avenue, Philadelphia, PA 19111-5094, USA. Customer Service telephone: (215) 697-2667/2179; Telephone Order Entry System (requires a touch tone telephone and a customer number): (215) 697-1187 thru 1195.

CHAPTER 8
Time and Timekeeping

8

Proceedings of the IEEE, *Special Issue on Time and Frequency*, J. Jespersen & D. W. Hanson, ed's., Vol. 79, No. 7, July 1991.

P. Kartaschoff, Frequency and Time, Academic Press, 1978.

G. M. R. Winkler, "Timekeeping and Its Applications," Advances in Electronics and Electron Physics, Vol. 44, pp. 34-97, 1977.

G. Kamas, & M. A. Lombardi, *Time & Frequency Users' Manual*, NIST Special Publication 559, revised 1990; Time and Frequency Division, NIST, 325 Broadway, Boulder, Colorado, 80303.

Characterization of Clocks and Oscillators, ed. by D. B. Sullivan, et al., NIST Technical Note 1337, 1990, Time and Frequency Division, NIST, 325 Broadway, Boulder, Colorado, 80303.

D. W. Allan, "Frequency and Time Coordination, Comparison, and Dissemination," in E. A. Gerber and A. Ballato, Precision Frequency Control, Vol. 2, pp. 233-273, Academic Press, 1985.

H. Hellwig, K. M. Evenson and D. J. Wineland, "Time, Frequency and Physical Measurement," Physics Today, pp. 23-30, December 1978.

"The Science of Timekeeping," Application Note 1289, Hewlett Packard Co., 1997.

"Fundamentals of Time and Frequency Standards," Application Note 52-1, Hewlett Packard Co., September 1986.

"Timekeeping and Frequency Calibration," Application Note 52-2, Hewlett Packard Co., November 1986.

HP application notes can be found at: <http://www.tmo.hp.com/tmo/Notes/English/>

R. Morris, Time's Arrows - Scientific Attitudes Toward Time, Simon and Schuster, NY, 1985.

What Is Time?

- "What, then, is time? If no one asks me, I know; if I wish to explain to him who asks, I know not." --- Saint Augustine, circa 400 A.D.
- The question, both a philosophical and a scientific one, has no entirely satisfactory answer. "Time is what a clock measures." "It defines the temporal order of events." "It is an element in the four-dimensional geometry of space-time." "It is nature's way of making sure that everything doesn't happen at once."
- Why are there "arrows" of time? The arrows are: entropy, electromagnetic waves, expansion of the universe, k-meson decay, and psychological. Does time have a beginning and an end? (Big bang; no more "events", eventually.)
- The unit of time, the second, is one of the seven base units in the International System of Units (SI units)*. Since time is the quantity that can be measured with the highest accuracy, it plays a central role in metrology.

8-1

None of the fundamental laws of physics distinguish between the forward and backward directions of time; e.g., the laws of mechanics are valid when time is reversed. If the collision of two particles is recorded, and the recording is played forward and backward, there is no way to tell the "correct" direction. The particles follow the laws of physics in either direction. However, five ways have been found in which the directions of time, the "arrows of time," can be distinguished. The most important arrow is the second law of thermodynamics, according to which the past and future look different; there will be more entropy tomorrow, there was less entropy yesterday. (The second law is not a fundamental law; it is a statistical law; it cannot be applied to a single particle or a small number of particles.)

In the laws of physics, there is no "present moment." The laws deal only with time intervals. The "flow of time" cannot be measured. "At best, one can say only that time moves onward at the rate of one second per second, which is about as meaningful as defining the word 'cat' by saying, 'A cat is a cat.' ". **

* See "Units of Measurement Having Special Names in the International System of Units (SI)" and the following page later in this chapter.

** R. Morris, Time's Arrows - Scientific Attitudes Toward Time, Simon and Schuster, NY, 1985.

K. Lippincott, et. al, The Story of Time, Merrell Holberton Publishers in association with National Maritime Museum (UK), 1999.

Dictionary Definition of “Time”

(From The Random House Dictionary of the English Language ©1987)

time (tim), n., *adj., u,* timed, tim~ing. —n. **1**. the system of those sequential relations that any event has to any other, as past, present, or future, indefinite and continuous duration regarded as that in which events succeed one another. **2.** duration regarded as belonging to the present life as distinct from the life to come or from eternity; finite duration. **3**. (*sometimes cap.)* a system or method of measuring or reckoning the passage of time: *mean time; apparent* time; Greenwich Time. **4.** a limited period or interval, as between two successive events: a *long time.* **5.** a particular period considered as distinct from other periods: *Youth is the best time of life.* **6.** Often, times. a. a period in the history of the world, or contemporary with the life or activities of a notable person: prehistoric times; *in Lincoln's* time. **b.** the period or era now or previously present: *a sign of the times*; How times have changed! **c.** a period considered with reference to it’s events or prevailing conditions, tendencies Ideas, etc.: *hard times; a time of war*. **7.** a prescribed or allotted period, as of one's life, for payment of a debt, etc. 8. the end of a prescribed or allotted period, as of one's life or a pregnancy: *His time had come, but there was no one left to mourn over him. When her time came, her husband accompanied her to the delivery room.* **9.** a period with reference to personal experience of a specified kind: to have a good time; a hot time in the *old* town tonight. **10**. a period of work of an employee, or the pay for it; working hours or days or an hourly or daily pay rate. **11**. *Informal.* a term of enforced duty or imprisonment: to serve time *in* the army, do time *in prison.* **12**. the period necessary for or occupied by something: *The time of the baseball game was two hours and two minutes. The bus takes too much time, so I'll take a plane.* **13**. *leisure time; sufficient or spare time: to have time for a vacation; I* have no time to stop now. **14.** a particular or definite point in time, as indicated by a clock: What time is it? **15.** a particular part of a year, day, etc.; season or period: *It's time for lunch***.** **16**. an appointed, fit, due, or proper instant or period: *A time for sowing; the time when the sun crosses the meridian There is A time for everything.* **17.** the particular point in time when an event Is scheduled to take place: *train time; curtain time.* **18**. an indefinite, frequently prolonged period or duration in the future: *Time will tell if what we have done here today was right.* **19.** the right occasion or opportunity: to watch one's time. **20.** each occasion of a recurring action or event: to *do* a thing *five times*, *It's* the *pitcher's* time at bat. **21.** times, used as a multiplicative word in phrasal combinations expressing how many instances of a quantity or factor are taken together: *Two goes into six three times, five times faster* **22.** Drama. *one of the three unities. Cf.* unity (def. 8) **23**. Pros. a unit or a group of units in the measurement of meter. **24.** *Music* **a**. tempo, relative rapidity of movement. **b.** the metrical duration of a note or rest. **c.** proper or characteristic tempo. **d**. the general movement of a particular kind of musical composition with reference to its rhythm, metrical structure, and tempo. **e.** the movement of a dance or the like to music so arranged: waltz time. **25**. *Mil.* rate of marching, calculated on the number of paces taken per minute: *double* time; *quick* time. **26.** *Manege.* each completed action or movement of the horse. **27. against time,** in an effort to finish something within a limited period: *We worked against time to get out the newspaper.* **28**. **ahead of time,** before the time due; early: *The building was completed ahead of time.* **29**. **at one time, a.** once; in a former time: *At one time they owned a restaurant.* **b**. *at the same time*; at once: *They all tried to talk at one time*. **30**. **at the same time,** *nevertheless; yet: I'd like to try it but at the same time I'm a little afraid* **31. at times** at intervals; occasionally: *At times the city becomes intolerable***.** **32. beat someone's time.** Slang. to compete for or win a person being dated or courted by another; prevail over a rival: *He accused me, his own brother, of trying to beat his time.* **33. behind the times,** old-fashioned; dated: These attitudes are *behind the* times. **34. for the time being, temporarily;** for the present: *Let's forget about it for the time being.* **35**. **from time to time,** on occasion; occasionally; at intervals: *She comes to see us from time to time.* **36. gain time,** to postpone in order to make preparations or gain an advantage delay the outcome of: He *hoped* to gain time by putting *off* signing the papers *for* a few days more. **37. in good time, a.** at the right time; on time, punctually. **b.** in advance of the right time; early: *We arrived at the appointed* spot in good time. **38. in no time,** in a very brief time; almost at once: *Working together, they cleaned the entire house in no time.* **39. in time, a.** early enough: to come in time for dinner. **b**. in the future; eventually: *In time he'll see what is right.* **c.** in the correct rhythm or tempo: *There would always be at least one child who couldn't play in time with the music* **40**. **keep time, a.** to record time, as a watch or clock does h to mark or observe the tempo. **c.**to perform rhythmic movements in unison. **41**. **kill time,** to occupy oneself with some activity to make time pass quickly: *While I was waiting, I killed time counting the cars on the freight trains*. **42. make time, a. to move** quickly, esp. in an attempt to recover lost time. **b.** to travel at a particular speed. **43. make time with,** Slang. to pursue or take as a sexual partner. **44. many a time,** again and again; frequently: *Many a time they didn't have enough to eat and went to bed hungry.* **45. mark time, a. to** suspend progress temporarily, as to await developments; fail to advance. **b.** *Mil.* to move the feet alternately as in marching, but without advancing. **46**. **on one's own time,** during one's free time; without payment: *He worked out more efficient production methods on his own time.* **47. on time, a.** at the specified time; punctuaBy. **b.** to be paid for within a designated period of time, as in installments: *Many people are never out of debt because they buy everything on time.* **48. out of time,** not in the proper rhythm: *His singing was out of time with the music* **49. Pass the time of day.** to converse briefly with or greet someone: *The women would stop in the market to pass the time of day.* **50. take one's time,** to be slow or leisurely; dawdle: *Speed was important here, but he just took his time.* **51. time after time.** again and again; repeatedly; often: *I've told him time after time not to slam the door.* **52**. **time and time again,** repeatedly; often: *Time and time again I warned her to stop smoking.* Also, **time and again. 53**. **time of llfe,** (one's) age: *At your time of life you must be careful not to overdo things.* **54. time of one's life,** In*formal.* an extremely enjoyable experience: *They had* the time of their *lives* on their trip to Europe.**.** **55.** of. pertaining to, or showing the passage of time **56.** (of an explosive device) containing a clock so that it will detonate at the desired moment a time bomb **57**. Com. payable at a stated period of time after presentment: *time drafts* or *notes.* **58.** of or pertaining to purchases on the installment plan, or with payment postponed. v.t. **59.** to measure or record the speed, duration, or rate of: to time a race. **60.** to fix the duration of: *The proctor timed the test at 16 minutes.* **61.** to fix the interval between (actions, events, etc.): *They timed their strokes at six per minute.* ***62.*** *to* regulate (a train, clock etc.) as to time. **63**. to appoint or choose the moment or occaslon for; schedule: *He timed the attack perfectly.* —v.i. **64.** to keep time; sound or move in unison. [bef. 900; (n.)

-

The Second

- The SI unit of time is the second (symbol s).
- The second was defined, by international agreement, in October, 1967, at the XIII General Conference of Weights and Measures.
- **The second is "the duration of 9,192,631,770 periods of the radiation corresponding to the transition between the two hyperfine levels of the ground state of the cesium atom 133."**
- Prior to 1967, the unit of time was based on astronomical observations; the second was defined in terms of ephemeris time, i.e., as "1/31,556,925.9747 of the tropical year..."
- The unit of frequency is defined as the hertz (symbol Hz). One hertz equals the repetitive occurrence of one "event" per second.

More information about the SI units can be found later in this chapter.

Frequency and Time

$$f = \frac{1}{\tau}$$

where f = frequency (= number of “events” per unit time), and
τ = period (= time between “events”)

$$\text{Accumulated clock time} = \frac{\text{Total number of events}}{\text{Number of events per unit of time}}$$

$$\text{Example}: \frac{3\text{ rotations of the earth}}{1\text{ rotation/day}} = 3\text{ days}$$

Frequency source + counting mechanism $\rightarrow$ clock

Examples of frequency sources: the rotating earth, pendulum, quartz crystal oscillator, and atomic frequency standard.

The essential parts of a clock are a frequency source (oscillator) and a counting device.

Typical Clock System

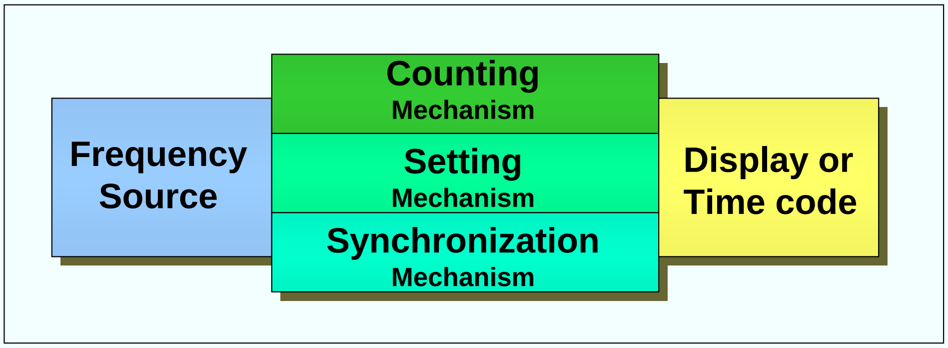

$$t = t_0 + \Sigma\Delta\tau$$

Where t is the time output, t_0 is the initial setting, and $\Delta\tau$ is the time interval being counted.

A clock may or may not have a display. In many consumer applications, clocks display the time of day. In many other applications, clocks are used internally only; their output is typically a one-pulse-per-second (1 pps) or a time code signal which are used for sequencing or time-tagging events (see “One Pulse-Per-Second Timing Signal” and “BCD Time Code” later in this chapter.

Evolution of Clock Technologies

- Sundials, and **continuous flow** of:
  - Water (clepsydra)
  - Sand (hour glass)
  - Falling weights, with frictional control of rate
- Vibrating, but **non-resonant motion -** escapement mechanisms: falling weight applies torque through train of wheels; rate control depends on moments of inertia, friction and torque; period is the time it takes to move from one angular position to another.
- **Resonant control**
  - Mechanical: pendulum, hairspring and balance wheel
  - Mechanical, electrically driven: tuning fork, quartz resonator
  - Atomic and molecular

H. Tait, Clocks and Watches, British Museum Publications, 1983

W. A. Marrison, "The Evolution of the Quartz Crystal Clock," The Bell System Technical Journal, Vol. XXVII, pp. 510-588, 1948. Reprinted at <http://www.ieee.org/uffc/fc>

<http://www.horology.com/>

Progress in Timekeeping

Time Period	Clock/Milestone	Accuracy Per Day
4th millennium B.C.	Day & night divided into 12 equal hours	
Up to 1280 A.D.	Sundials, water clocks (clepsydrae)	~1 h
~1280 A.D.	Mechanical clock invented- assembly time for prayer was first regular use	~30 to 60 min
14th century	Invention of the escapement; clockmaking becomes a major industry	~15 to 30 min
~1345	Hour divided into minutes and seconds	
15th century	Clock time used to regulate people's lives (work hours)	~2 min
16th century	Time's impact on science becomes significant (Galileo times physical events, e.g., free-fall)	~1 min
1656	First pendulum clock (Huygens)	~100 s
18th century	Temperature compensated pendulum clocks	1 to 10 s
19th century	Electrically driven free-pendulum clocks	10^{-2} to 10^{-1} s
~1910 to 1920	Wrist watches become widely available	
1920 to 1934	Electrically driven tuning forks	10^{-3} to 10^{-2} s
1921 to present	Quartz crystal clocks (and watches. Since ~1971)	10^{-5} to 10^{-1} s
1949 to present	Atomic clocks	10^{-9} to 10^{-4} s

H. Tait, Clocks and Watches, British Museum Publications, 1983

W. A. Marrison, "The Evolution of the Quartz Crystal Clock," The Bell System Technical Journal, Vol. XXVII, pp. 510-588, 1948. Reprinted at <http://www.ieee.org/uffc/fc>

<http://www.horology.com/>

Clock Errors

$$T(t) = T_0 + \int_0^t R(t)dt + \varepsilon(t) = T_0 + (R_0 t + 1/2At^2 + \ldots) + \int_0^t E_i(t)dt + \varepsilon(t)$$

Where,

$T(t)$ = time difference between two clocks at time **t** after synchronization

T_0 = synchronization error at t = 0

$R(t)$ = the rate (i.e., fractional frequency) difference between the two clocks under comparison; $R(t) = R_0 + At + \ldots E_i(t)$

$\varepsilon(t)$ = error due to random fluctuations = $\tau\sigma_y(\tau)$

R_0 = R(t) at t = 0

A = aging term (higher order terms are included if the aging is not linear)

$E_i(t)$ = rate difference due to environmental effects (temperature, etc.)

- - - - - - - - - - - - - -

Example: If a watch is set to within 0.5 seconds of a time tone (T_0 = 0.5 s), and the watch initially gains 2 s/week (R_0 = 2 s/week), and the watch rate ages -0.1 s per week^2, (A = -0.1 s/week^2), then after 10 weeks (and assuming $E_i(t)$ = 0):

T (10 weeks) = 0.5 (2 x 10) + 1/2(-0.1 x (10)^2) = 15.5 seconds.

8-8

No clock can ever keep perfect time because all oscillators exhibit random and systematic errors (as discussed in chapters 4 and 6), clocks cannot be set perfectly (e.g., due to noise), and time is a function of position and motion (relativistic effects are discussed later in this chapter).

Frequency Error vs. Time Error

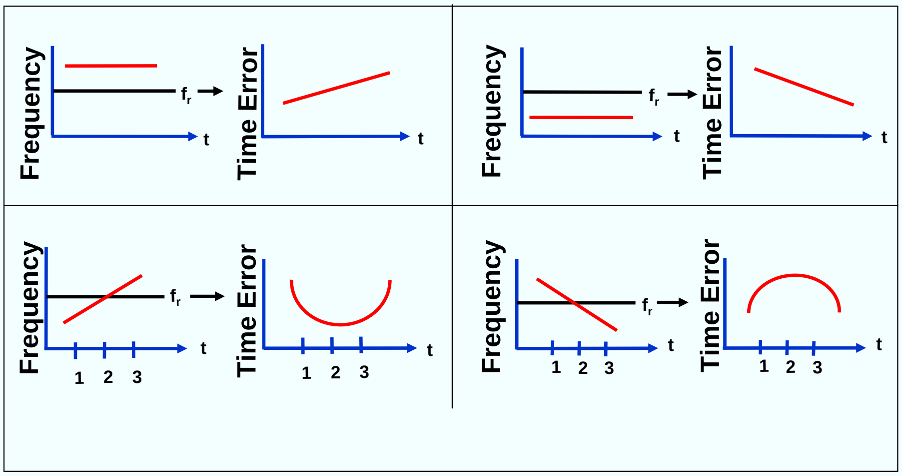

f_r = reference (i.e., the "correct") frequency

8-9

$$f_t = f_o + Af_rt$$

where f_t = f at time t, f_o = initial f at time zero, A is the aging (e.g., 5 x 10^{-10} per day), and f_r = the reference frequency. The time error T(t) is given by the equation two pages back. Neglecting the noise term,

$$T(t) = T_0 + ([f_o - f_r]/f_r]\ t + 1/2At^2)$$

The plot of T_o vs. t is a parabola (for finite A), for which the vertical displacement is T_o. The above illustration shows the relationship between frequency and time errors, for positive and negative constant frequency errors, and for positive and negative aging.

"Timekeeping and Frequency Calibration," Hewlett-Packard Co. Application Note 52-1
<http://www.tmo.hp.com/tmo/Notes/English/>

Clock Error vs. Resynchronization Interval

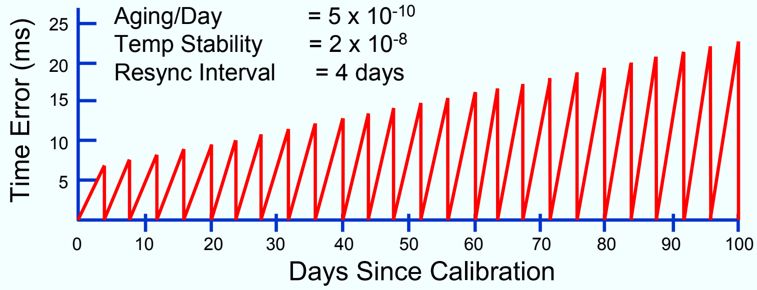

	TCXO		OCXO		MCXO		RbXO	
Avg. Temp. Stab.	1×10^{-6}		2×10^{-8}		2×10^{-8}		2×10^{-8}	
Aging/Day	1×10^{-8}		1×10^{-10}		5×10^{-11}		5×10^{-13}	
Resynch Interval* (A/J & security)	10 min	4 hrs	6 hours	4 days	6 hours	4 days	6 hours	4 days
Recalibr. Interval * (Maintenance cost)	10 yrs	80 days	50 years	1.5 yrs	94 yrs	3 yrs	None needed	300 yrs

* Calculated for an accuracy requirement of 25 milliseconds. Many modern systems need much better.

8-10

In the graph above is an example that illustrates how the time error of a clock grows with days since synchronization and syntonization (i.e., calibration). The clock is assumed to be in a system that requires a 25 millisecond accuracy, the clock is assumed to have an average frequency offset due to temperature of 2×10^{-8}, an aging rate of 5×10^{-10} per day, and negligible other error sources. Upon calibration, the clock is assumed to have zero frequency and time error.

The clock is assumed to be resynchronized every four days. During the initial period, the time error is caused almost entirely by the frequency error due to temperature, i.e., 2×10^{-8} in the example. Aging, however, adds 5×10^{-10} to the frequency error every day, so, after 40 days, the frequency error due to aging equals that due to temperature. After 40 days, aging is the dominant cause of the frequency error. The time error increases more and more in each four day resynchronization interval. Eventually, after about 100 days, the time error at the end of the the four days reaches the 25 ms limit. At that point, either the resynchronization interval must be made shorter, or the clock must be recalibrated, i.e., its oscillator's frequency must be readjusted to the correct value.

The table shows other examples - for a TCXO, OCXO, MCXO and RbXO. For each, two resynchronization and recalibration scenarios are shown that result in a 25 ms time error at the end of the recalibration and last resynchronization intervals. Whereas a TCXO in this application needs to be resynchronized/recalibrated frequently, a Rb frequency standard or RbXO can maintain the required accuracy indefinitely.

Time Error vs. Elapsed Time

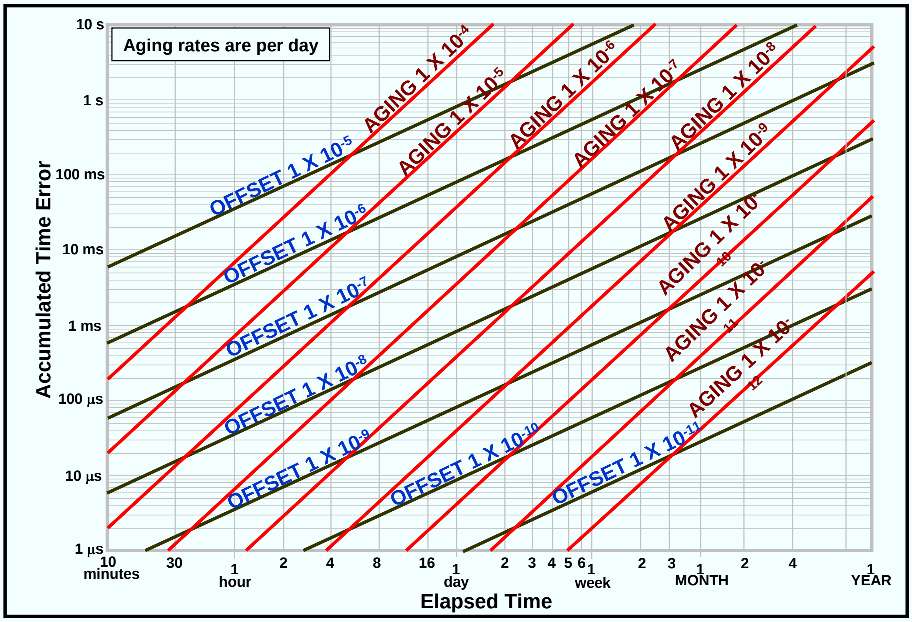

8-11

To Estimate The Accumulated Time Error*:

1. Estimate the initial frequency offset plus the average expected offsets due to temperature and other environmental effects.
2. Find the time error caused by the sum of the offsets.
3. Find the time error caused by the oscillator's specified aging rate
4. Add the results of 2 and 3 to estimate the total time error

* In the nomograph, the contribution due to aging assumes no resynchronization. If there is resynchronization, as in the examples on the previous page, then the offset due to aging must first be calculated and added to the other offsets. For example, in the TCXO example on the previous page, in the four hour resynchronization interval, the offset due to temperature causes a time error of ~14 ms. The aging after 80 days results in a frequency offset of 8×10^{-7} which results in another ~11 ms error, so, after 80 days of aging, the combined offsets due to aging and temperature result in ~25 ms time error four hours after resynchronization.

Synchronization, Syntonization

Clocks are syn<u>chron</u>ized* when

- They are in agreement as to the time, or
- Output signals or data streams agree in phase, or
- Sync patterns are in alignment

Clocks/oscillators are syn<u>ton</u>ized when**

- Oscillators have the “same” frequency (the output signals need not be in phase)
- Clocks run at the same rate (the internal oscillators need not be of the same frequency)

* Chron ➔ time
** Tone ➔ frequency

Wristwatch examples: a wristwatch is compared to a time standard, e.g., to the time at www.time.gov, and is found to be 10 seconds off. When the time shown by the wristwatch is adjusted to that of the standard, the watch is **synchronized**. When the wristwatch is compared again a month later, it is found to be off by 30 seconds. The wristwatch is taken to a watchmaker who finds that the frequency of the internal oscillator is incorrect. He adjusts the frequency to the correct value, i.e., to 32,768.0000 Hz, using a frequency standard (e.g., a GPS disciplined oscillator). At that point, the watch is **syntonized** to the watchmaker’s frequency standard. After the watch is disconnected, the syntonization will last for a finite amount of time (that time depends on the allowed frequency offset.). When two oscillators are frequency locked, they will remain syntonized as long as they remain locked.

In the slide, “in agreement,” “same”… mean that they are within an acceptable or specified range of each other.

On Using Time for Clock Rate Calibration

It takes time to measure the clock rate (i.e., frequency) difference between two clocks. The smaller the rate difference between a clock to be calibrated and a reference clock, the longer it takes to measure the difference ($\Delta t/t \approx \Delta f/f$).

For example, assume that a reference timing source (e.g., Loran or GPS) with a random time uncertainty of 100 ns is used to calibrate the rate of a clock to 1×10^{-11} accuracy. A frequency offset of 1×10^{-11} will produce1 $\times 10^{-11}$ x 3600 s/hour = 36 ns time error per hour. Then, to have a high certainty that the measured time difference is due to the frequency offset rather than the reference clock uncertainty, one must accumulate a sufficient amount ($\geq$100 ns) of time error. It will take hours to perform the calibration. (See the next page for a different example.) If one wishes to know the frequency offset to a $\pm 1 \times 10^{-12}$ precision, then the calibration will take more than a day.

Of course, if one has a cesium standard for frequency reference, then, for example, with a high resolution frequency counter, one can make frequency comparisons of the same precision much faster.

-

Calibration With a 1 pps Reference

Let A = desired clock rate accuracy after calibration
A' = actual clock rate accuracy
$\Delta\tau$ = jitter in the 1 pps of the reference clock, rms
$\Delta\tau'$ = jitter in the 1 pps of the clock being calibrated, rms
t = calibration duration
Δt = accumulated time error during calibration

Then, what should be the **t** for a given set of A, Δt, and $\Delta t'$?

Example: The crystal oscillator in a clock is to be calibrated by comparing the 1 pps output from the clock with the 1 pps output from a standard. If $A = 1 \times 10^{-9}$; $\Delta\tau = 0.1\ \mu s$, and $\Delta\tau' = 1.2\ \mu s$, then, $[(\Delta\tau)^2 + (\Delta\tau')^2]^{1/2} \approx 1.2\ \mu s$, and when A = A', $\Delta t = (1 \times 10^{-9})\mathbf{t} \equiv (1.2\ \mu s)N$, and $\mathbf{t} = (1200N)$ s. The value of N to be chosen depends on the statistics of the noise processes, on the confidence level desired for A' to be $\leq$ A, and on whether one makes measurements every second or only at the end points. If one measures at the end points only, and the noise is white phase noise, and the measurement errors are normally distributed, then, with N = 1, 68% of the calibrations will be within A; with N = 2, and 3, 95% and 99.7%, respectively, will be within A. One can reduce **t** by about a factor $2/N^{3/2}$ by making measurements every second; e.g., from 1200 s to $2 \times (1200)^{2/3}$ = 226 s.

The above results are based on an analysis by Samuel R. Stein, Ball Communication Systems Div., private communication, November 1989.

Time Transfer Methods

Method	Accuracy	~ Cost ('95)
Portable Cs clock	10 - 100 ns	$45K - 70K
GPS time dissemination GPS common view	20 - 100 ns 5 - 20 ns	$100 - 5K
Two-way via satellite	~1 ns	$60k
Loran-C	100 ns	$1K - 5K
HF (WWV)	2 ms	$100 - 5K
Portable quartz & Rb clocks	Calibration interval dependent	$200 - 2K

Time-transfer techniques provide a method of maintaining synchronization among remote locations which complements the use of independent clocks. In fact, most systems derive time using both external time references and internal clocks. The former provide long-term accuracy and interoperability; the latter provide autonomous capability in the absence of the external references. A variety of time-transfer techniques are in use today. They vary in capability from a few milliseconds to a few nanoseconds. GPS, and the GPS common view technique, are discussed in the following pages.

Radio broadcast services, such as WWV and WWVB in the United States, disseminate time with modest accuracy. The high-frequency broadcasts between 2.5 and 20 MHz are usually received after reflection from the ionosphere. As a result, variability in the path delay limits the accuracy to a few milliseconds for most users.

The highest accuracy time-synchronization is obtained via two-way satellite techniques. Both the propagation errors and the delays through the receiver are calibrated by transmitting time in both directions between two sites. Each site measures the difference between the time of arrival of the pulse from the other site and the time of the local clock. The difference in the measurements made at the two ends provides the relative time of the two local clocks. The effects of the transmitter and receiver delays, the uplink and downlink propagation delays, and the delays through the satellite are substantially canceled. As a result, time-synchronization accuracy of a few nanoseconds has been obtained using commercial communication satellites and very small aperture terminals (VSAT). A custom spread-spectrum time-transfer modem is necessary.

W. Lewandowski & C. Thomas, "GPS Time Transfer," Proc. IEEE, vol. 79, pp. 991-1000, 1991.

D. Kirchner, "Two-way Time Transfer Via Communcations Satellites," Proc. IEEE, vol. 79, pp. 983-990, 1991.

S. Leschiutta, "Time Synchronization Using Laser Techniques," Proc. IEEE, vol. 79, pp. 1001-1008, 1991.

Global Positioning System (GPS)

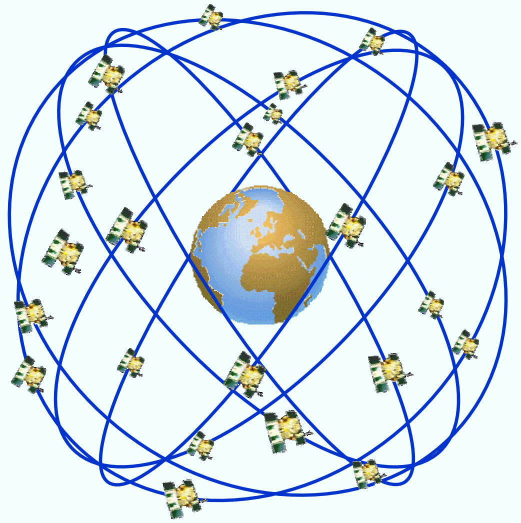

GPS Nominal Constellation:
24 satelites in 6 orbital planes,
4 satelites in each plane,
20,200 km altitude, 55 degree inclinations

8-16

The Global Positioning System (GPS) is the most precise worldwide navigation system available. It is also capable of providing nanosecond-level timing accuracies, so, it is also one of the most accurate time sources.

GPS is a satellite-based radio navigation and positioning system that is designed to provide global, all-weather, 24-hour, accurate navigation to an unlimited number of users. Each of the satellites contain atomic clocks. The satellites transmit a navigation message that provides satellite position, time, and atmospheric propagation correction data. The GPS receiver, which contains a quartz crystal clock, measures the transit time of the satellite signal and multiplies that time by the speed of light to compute range to the satellite. The satellite clocks are more accurate than the receiver clocks. Therefore, although three satellites can provide latitude, longitude and altitude, the signal from a fourth satellite is used to correct for the navigational error caused by the receiver clock's inaccuracy, i.e., the receivers calculate their x, y, z, and t from receiving each of four satellites' x, y, z, and t. Velocity is determined from the Doppler shifts of the the transmitted carrier frequencies.

A. J. Van Dierendonck and M. Birnbaum, "Time Requirements in the NAVSTAR Global Positioning System (GPS)," Proc. 30th Annual Symposium on Frequency Control, pp. 375-383, 1976, AD046089.

F. E. Butterfield, "Frequency Control and Time Information in the NAVSTAR/Global Positioning System," Proc. 30th Annual Symposium on Frequency Control, pp. 371-374, 1976, AD046089

Much information is available on the Internet, e.g., see "Navstar GPS Internet Connections" at http://gauss.gge.unb.ca/GPS.INTERNET.SERVICES.HTML, and

"Global Positioning System Overview" by Peter H. Dana (from which the above illustration was "borrowed," with permission from Peter H. Dana, The University of Texas at Austin) at http://www.utexas.edu/depts/grg/gcraft/notes/gps/gps.html

GPS

GPS can provide global, all-weather, 24-hour, real-time, accurate navigation and time reference to an unlimited number of users.

- **GPS Accuracies (2σ)**

Position:	120 m for Standard Positioning Service, SPS
	40 m for Precise Positioning Service, PPS
	1 cm + 1ppm for differential, static land survey
Velocity:	0.3 m/s (SPS), 0.1 m/s (PPS).
Time:	350 ns to < 10 ns

- 24 satellites in 6 orbital planes; 6 to 10 visible at all times; ~12 h period 20,200 km orbits.

- Pseudorandom noise (PRN) navigation signals are broadcast at L1 = 1.575 GHz (19 cm) and L2 = 1.228 GHz (24 cm); two codes, C/A and P are sent; messages provide satellite position, time, and atmospheric propagation data; receivers select the optimum 4 (or more) satellites to track. PPS (for DoD users) uses L1 and L2, SPS uses L1 only.

GPS may also be used in a differential mode, often called common view, to provide improved synchronization capability. For sites located within several thousand kilometers (km) of one another, timing errors due to errors in the ephemeris and the propagation delay are approximately equal. Thus, when the absolute GPS times of arrival of simultaneously observed satellite signals are subtracted from one another, the differential accuracy can be improved to ~ten nanoseconds.

W. Lewandowski and C. Thomas, "GPS Time Transfer," *Proc. IEEE*, Vol. 79, pp. 991-1000, July 1991.

C. Fox and S. R. Stein, "GPS Time Determination and Dissemination," *Tutorials from the Twenty-third Ann. Precise Time and Time Interval (PTTI) Applications and Planning Meeting*, 1991, NTIS Accession No. AD-A254745

Oscillator's Impact on GPS

- Satellite oscillator's (clock's) inaccuracy & noise are major sources of navigational inaccuracy.
- Receiver oscillator affects GPS performance, as follows:

Oscillator Parameter	GPS Performance Parameter
Warmup time	Time to first fix
Power	Mission duration, logistics costs (batteries)
Size and weight	Manpack size and weight
Short term stability (0.1 s to 100 s)	Δ range measurement accuracy, acceleration performance, jamming resistance
Short term stability (~15 minute)	Time to subsequent fix
Phase noise	Jamming margin, data demodulation, tracking
Acceleration sensitivity	See short term stability and phase noise effects

8-18

D. L. Hessick and W. C. Euler, "GPS User Receivers and Oscillators," Proc. 38th Annual Symposium on Frequency Control, pp. 341-362, 1984, IEEE Catalog No. 84CH2062-8.

N. Ashby & M. Weiss, "Global Positioning System Receivers and Relativity," NIST Technical Note 1385, March 1999.

Time Scales

- A "**time scale**" is a system of assigning dates, i.e., a "time," to events; e.g., 6 January 1989, 13 h, 32 m, 46.382912 s, UTC, is a date.
- A "**time interval**" is a "length" of time between two events; e.g., five seconds.
- **Universal time** scales, UT0, UT1, and UT2, are based on the earth's spin on its axis, with corrections.
- Celestial navigation: clock (UT1) + sextant → position.
- **International Atomic Time (TAI)** is maintained by the International Bureau of Weights and Measures (BIPM; in France), and is derived from an ensemble of more than 200 atomic clocks, from more than 60 laboratories around the world.
- **Coordinated Universal Time (UTC)** is **the** time scale today, by international agreement. The rate of UTC is determined by TAI, but, in order to not let the time vs. the earth's position change indefinitely, UTC is adjusted by means of leap seconds so as to keep UTC within 0.9 s of UT1.

UTC is generated (~30 days) after the fact, by The Bureau International des Poids et Mesures near Paris, France, by taking the times of about 230 (as of 1999) of the best (atomic) clocks in the timing laboratories of the world and combining their readings in an optimum way. Each of the 230 clocks receives a weighting factor, depending on its performance. More than 30 countries' laboratories contribute time data to UTC.

The length of the second is determined by evaluations of 11 laboratory Cs primary frequency standards (located in six countries). A weighted combination is used to make the best estimate of the second.

The time scale generated from combining the 230 clocks and 11 primary standards is called the Temps Atomique International, TAI, i.e., the International Atomic Time. The source of the "second" is the 11 primary standards, and the 230 clocks are the flywheel that maintain the calibration provided by the primary standards.

To obtain real-time estimates of UTC, timing centers around the world generate their own current best estimate of UTC. These are called UTC(k), where k is usually the name of the timing center, e.g., UTC(NIST), UTC(USNO), etc. The BIPM distributes a monthly bulletin which reports all the UTC - UTC(k) for the previous month.

GPS time is not adjusted for leap seconds. It is steered to agree with UTC, except for an integer number of seconds. Except for the leap seconds, GPS time is within 40 ns of UTC. UTC, as estimated by the USNO, is available from the GPS signal.

T. J. Quinn, "The BIPM and the Accurate Measurement of Time," Proc. IEEE, vol. 79, pp. 894-905, 1991.

D. B. Sullivan, "Time Generation and Distribution," Proc. IEEE, vol. 79, pp. 906-914, 1991.

D. D. McCarthy, "Astronomical Time," Proc. IEEE, vol. 79, pp. 915-920, 1991.

<u>The Science of Timekeeping</u>, Hewlett-Packard Co. Application Note 1289 <http://www.tmo.hp.com/tmo/Notes/English/>

Clock Ensembles and Time Scales

- An ensemble of clocks is a group of clocks in which the time outputs of individual clocks are combined, via a "time-scale algorithm," to form a time scale.
- Ensembles are often used in mission critical applications where a clock's failure (or degraded performance) presents an unacceptable risk.
- Advantages of an ensemble:
  - system time & frequency are maintained even if a clock in the ensemble fails
  - ensemble average can be used to estimate the characteristics of each clock; outliers can be detected
  - performance of ensemble can (sometimes) be better than any of the contributors
  - a proper algorithm can combine clocks of different characteristics, and different duty cycles, in an optimum way

8-20

P. Tavella & C. Thomas, "Comparative Study of Time Scale Algorithms," Metrologia, vol. 28, pp. 57-63, 1991.

C. Thomas, "Impact of New Clock Technologies on the Stability and Accuracy of the International Atomic Time TAI," Proc. 1996 IEEE Int'l Frequency Control Symposium, pp. 1123-1130, 1996.

Kamas, George and Michael A. Lombardi, *Time & Frequency Users' Manual*, NIST Special Publication 559, revised 1990.

Relativistic Time

- Time is not absolute. The "time" at which a distant event takes place depends on the observer. For example, if two events, **A** and **B**, are so close in time or so widely separated in space that no signal traveling at the speed of light can get from one to the other before the latter takes place, then, even after correcting for propagation delays, it is possible for one observer to find that **A** took place before **B**, for a second to find that **B** took place before **A**, and for a third to find that **A** and **B** occurred simultaneously. Although it seems bizarre, all three can be right.
- Rapidly moving objects exhibit a "time dilation" effect. ("Twin paradox": Twin on a spaceship moving at 0.87c will age 6 months while twin on earth ages 1 year. There is no "paradox" because spaceship twin must accelerate; i.e., there is no symmetry to the problem.)
- A clock's rate also depends on its position in a gravitational field. A high clock runs faster than a low clock.

8-21

N. Ashby & M. Weiss, "Global Positioning System Receivers and Relativity," NIST Technical Note 1385, March 1999.

C. Alley, "Relativity and Clocks," Proc. 33rd Annual Symposium on Frequency Control, pp. 4-39, 1979.

G. M. R. Winkler, "Synchronization and Relativity," Proc. IEEE, vol. 79, pp. 1029-1039, 1991.

The Science of Timekeeping, Hewlett-Packard Co. Application Note 1289
<http://www.tmo.hp.com/tmo/Notes/English/>

Relativistic Time Effects

- Transporting "perfect" clocks slowly around the surface of the earth along the equator yields Δt = -207 ns eastward and Δt = +207 ns westward (portable clock is late eastward). The effect is due to the earth's rotation.
- At latitude 40^o, for example, the rate of a clock will change by 1.091 x 10^{-13} per kilometer above sea level. Moving a clock from sea level to 1km elevation makes it gain 9.4 nsec/day at that latitude.
- In 1971, atomic clocks flown eastward then westward around the world in airlines demonstrated relativistic time effects; eastward Δt = -59 ns, westward Δt = +273 ns; both values agreed with prediction to within the experimental uncertainties.
- Spacecraft Examples:
  - For a space shuttle in a 325 km orbit, $\Delta t = t_{space} - t_{ground}$ = -25 μsec/day
  - For GPS satellites (12 hr period circular orbits), Δt = +38.5 μsec/day
- In precise time and frequency comparisons, relativistic effects must be included in the comparison procedures.

8-22

N. Ashby & M. Weiss, “Global Positioning System Receivers and Relativity,” NIST Technical Note 1385, March 1999.

C. Alley, "Relativity and Clocks," Proc. 33rd Annual Symposium on Frequency Control, pp. 4-39, 1979.

G. M. R. Winkler, “Synchronization and Relativity,” Proc. IEEE, vol. 79, pp. 1029-1039, 1991

Relativistic Time Corrections

The following expression accounts for relativistic effects, provides for clock rate accuracies of better than 1 part in 10^{14}, and allows for global-scale clock comparisons of nanosecond accuracy, via satellites:

$$\Delta t = -\frac{1}{c^2}\int_0^T \left[\frac{1}{2}\left(v_s^2 - v_g^2\right) - \left(\Phi_S - \Phi_g\right)\right] dt + \frac{2\omega}{c^2} A_E$$

Where Δt = time difference between spacecraft clock and ground clock, t_S-T_g
V_S = spacecraft velocity (<<c), V_g = velocity of ground station
Φ_S = gravitational potential at the spacecraft
Φ_g = gravitational potential at the ground station
ω = angular velocity of rotation of the earth
A_E = the projected area on the earth's equatorial plane swept out by the vector whose tail is at the center of the earth and whose head is at the position of the portable clock or the electromagnetic signal pulse. The A_E is taken positive if the head of the vector moves in the eastward direction.

Within 24 km of sea level, Φ = gh is accurate to 1 x 10^{-14} where g = (9.780 + 0.052 $\sin^2\Psi$)m/s^2, Ψ = the latitude, h = the distance above sea level, and where the $\sin^2\Psi$ term accounts for the centrifugal potential due to the earth's rotation. The "Sagnac effect," $(2\omega/c^2)A_E$ = (1.6227 x 10^{-21}s/m^2)A_E, accounts for the earth-fixed coordinate system being a rotating, noninertial reference frame.

8-23

N. Ashby and D. W. Allan, "Practical Implications of Relativity for a Global Coordinate Time Scale," Radio Science, Vol. 14, No. 4, pp. 649-669, July-August 1979.

C. Alley, "Relativity and Clocks," Proc. 33rd Annual Symposium on Frequency Control, pp. 4-39, 1979.

G. M. R. Winkler, "Synchronization and Relativity," Proc. IEEE, vol. 79, pp. 1029-1039, 1991.

Some Useful Relationships

- Propagation delay = 1 ns/30 cm = 1 ns/ft = 3.3 μs/km $\approx$ 5 μs/mile
- 1 day = 86,400 seconds; 1 year = 31.5 million seconds
- Clock accuracy: 1 ms/day $\approx 1 \times 10^{-8}$
- At 10 MHz: period = 100 ns; phase deviation of 1° = 0.3 ns of time deviation
- Doppler shift* = $\Delta f/f = 2v/c$

----

* **Doppler shift example**: if v = 4 km/h and f = 10 GHz (e.g., a slow-moving vehicle approaching an X-band radar), then Δf = 74 Hz, i.e., an oscillator with low phase noise at 74Hz from the carrier is necessary in order to "see" the vehicle.

8-24

-

One Pulse-Per-Second Timing Signal
(MIL-STD-188-115)

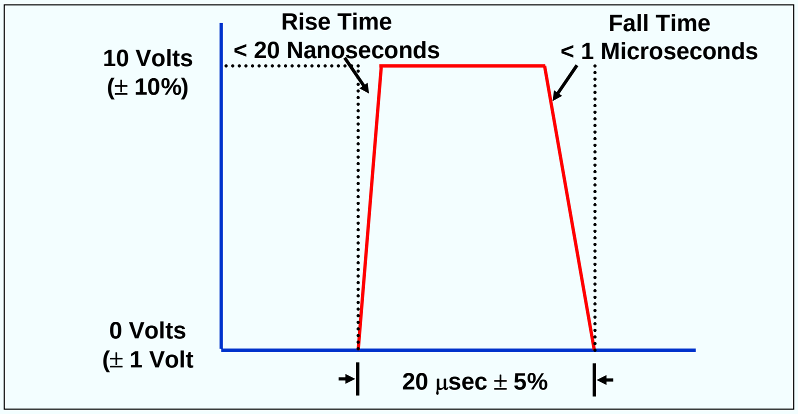

"The leading edge of the BCD code (negative going transitions after extended high level) shall coincide with the on-time (positive going transition) edge of the one pulse-per-second signal to within ±1 millisecond." See next page for the MIL-STD BCD code.

MIL-STD-188-115, Military Standard, "Interoperability and Performance Standards for Communications Timing and Synchronization Subsystems," 31 March 1986. Copies are available from Naval Publications and Forms Center, 5801 Tabor Ave., Philadelphia, PA 19120

BCD Time Code

(MIL-STD-188-115)

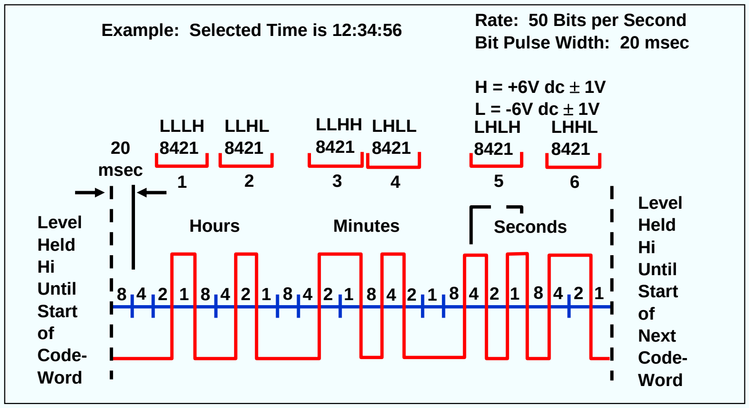

24 Bit BCD Time Code*

* May be followed by 12 bits for day-of-year and/or 4 bits for figure-of-merit (FOM). The FOM ranges from better than 1 ns (BCD character 1) to greater than 10 ms (BCD character 9).

Time codes are used primarily to record time-of-day information with data in order to provide a time reference during data reduction (also called “time tagging”). Time codes originated with requirements during early missile and space programs to correlate test data with precise time. Today, time codes are used widely in applications such as communications systems, medical (patient monitoring) applications, and industrial and commercial data acquisition systems.

MIL-STD-188-115, Military Standard, "Interoperability and Performance Standards for Communications Timing and Synchronization Subsystems," 31 March 1986. Copies are available from Naval Publications and Forms Center, 5801 Tabor Ave., Philadelphia, PA 19120

Parallel time codes are defined in IRIG Standard 205-87

Serial time codes are defined in IRIG Standard 200-98, http://tecnet0.jcte.jcs.mil/RCC/manuals/200/index.html

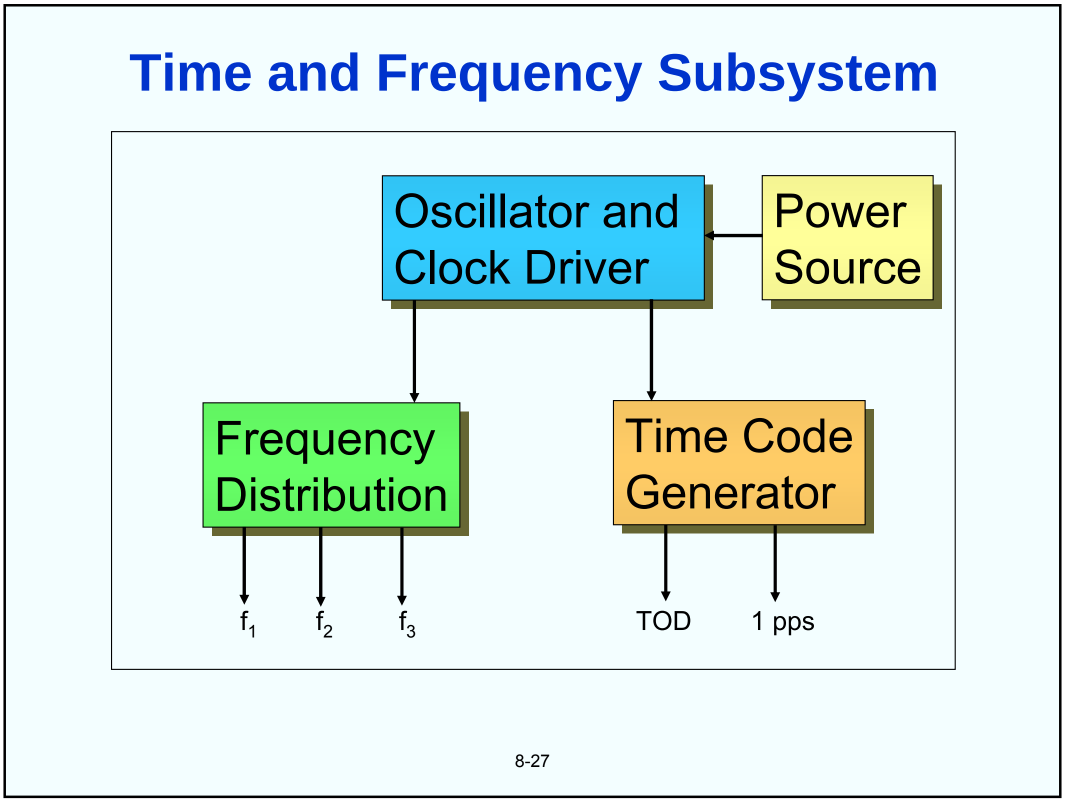

The time and frequency subsystem, also sometimes called a “time and frequency unit (TFU) provides frequencies and time to a system.

The MIFTTI Subsystem

MIFTTI = Modular Intelligent Frequency, Time and Time Interval

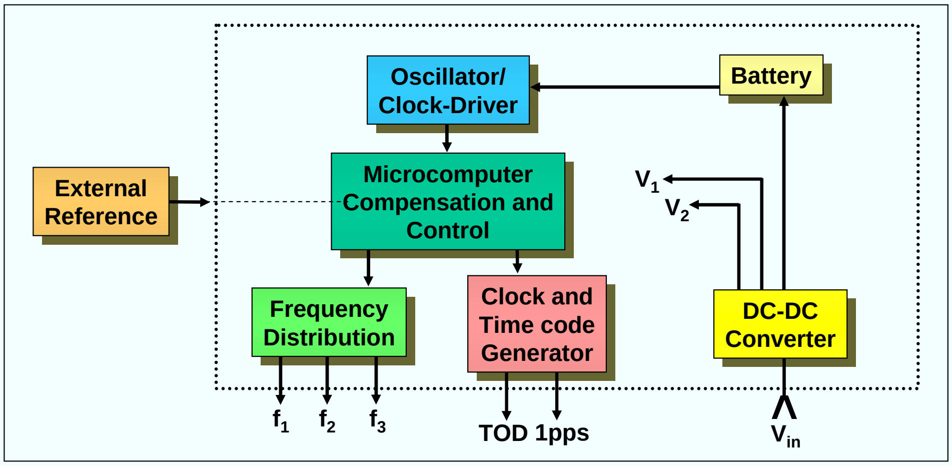

* The microcomputer compensates for systematic effects (after filtering random effects), and performs: automatic synchronization and calibration when an external reference is available, and built-in-testing.

8-28

Time and frequency subsystems can include built-in intelligence to improve performance, as was shown in the MIFFTI development program. Intelligence was used to achieve maximum time and frequency performance from the available frequency sources by providing automatic fault detection, synchronization and syntonization, and by providing compensation for such systematic errors such as short-term aging and temperature sensitivity.

Clocks and timing receivers can be combined in a timing system to provide a broader range of timing capabilities than either one can provide alone. Such a system uses the received timing signal to calibrate the local clock, and learn its time, frequency, and frequency aging. When the timing signal is unavailable, the local clock acts as a "flywheel." Its free-running operation starts using the time and frequency provided by calibration versus the external source. The frequency may subsequently be updated periodically for the predicted frequency aging. This procedure produces the minimum possible free-running timing errors. Commercial "disciplined oscillators" now provide these functions in an integrated package.

K.D. Lyon, W.J. Riley, and J.R. Vaccaro, "The Modular Intelligent Frequency, Time And Time Interval (MIFTTI) Subsystem Program," Proc. 43rd Ann. Frequency Control Symp., pp. 225-231, 1989.

S. R. Stein & R. L. Filler, "Kalman Filter Analysis for Real Time Applications of Clocks and Oscillators, Proc. 42nd Ann. Frequency Control Symp., pp. 447-452, 1988.

S. R. Stein and J. R. Vig, "Frequency Standards for Communications," U. S. Army Laboratory Command Research and Development Technical Report SLCET-TR-91-2 (Rev. 1), October 1991, AD-A243211. This report is a reprint of a chapter "Communications Frequency Standards," in The Froehlich/Kent Encyclopedia of Telecommunications, Vol. 3, pp. 445-500, Marcel Dekker, Inc., 1992.

"Time" Quotations

- 3 o'clock is always too late or too early for anything you want to do.................Jean-Paul Sartre
- Time ripens all things. No man's born wise...........Cervantes.
- Time is the rider that breaks youth...........George Herbert
- Time wounds all heels.................Jane Ace
- Time heals all wounds.................Proverb
- The hardest time to tell: when to stop.....Malcolm Forbes
- Time is on our side.................William E. Gladstone
- It takes time to save time............Joe Taylor
- Time, whose tooth gnaws away everything else, is powerless against truth.................Thomas H. Huxley
- Time has a wonderful way of weeding out the trivial.................Richard Ben Sapir
- Time is a file that wears and makes no noise...........English proverb
- The trouble with life is that there are so many beautiful women - and so little time.................John Barrymore
- Life is too short, and the time we waste yawning can never be regained.................Stendahl
- Time goes by: reputation increases, ability declines.................Dag Hammarskjöld
- Remember that time is money..............Benjamin Franklin
- Time is money - says the vulgarest saw known to any age or people. Turn it around, and you get a precious truth - Money is time.................George (Robert) Gissing
- The butterfly counts not months but moments, and has time enough.................Rabindranath Tagore
- Everywhere is walking distance if you have the time.................Steven Wright
- The only true time which a man can properly call his own, is that which he has all to himself; the rest, though in some sense he may be said to live it, is other people's time, not his.................Charles Lamb
- It is familiarity with life that makes time speed quickly. When every day is a step in the unknown, as for children, the days are long with gathering of experience.................George Gissing
- Time is a great teacher, but unfortunately it kills all its pupils.................Hector Berlioz
- To everything there is a season, and a time to every purpose under the heaven.................Ecclesiastes 3:1
- Time goes, you say? Ah no! Time stays, we go.................Henry Austin Dobson

8-29

Man must sit in chair with mouth open for very long time before roast duck fly in. - Chinese Proverb

The time to repair the roof is when the sun is shining. - John F. Kennedy

There may be times when we are powerless to prevent injustice, but there must never be a time when we fail to protest. - Elie Wiesel

The time to win a fight is before it starts. - Frederick W. Lewis

Nothing is a waste of time if you use the experience wisely. - Auguste Rodin

There is one thing stronger than all the armies in the world, and that is an idea whose time has come. - Victor Hugo

We didn't lose the game; we just ran out of time. - Vince Lombardi

I have made this letter longer because I lack the time to make it shorter. - Blaise Pascal

Begin to make the kind of investment of personal time which will assure that those who come after us will live as well. - Charles W. Bray III

Most of us spend too much time on the last twenty-four hours and too little on the last six thousand years. - Will Durant

Don't spend your precious time asking 'Why isn't the world a better place?" It will only be time wasted. The question to ask is 'How can I make it better?' To that there is an answer. - Leo F. Buscaglia

In Germany they came first for the Communists, and I didn't speak up because I wasn't a Communist. Then they came for the Jews, and I didn't speak up because I wasn't a Jew. Then they came for the trade unionists, and I didn't speak up because I wasn't a trade unionist. Then they came for the Catholics, and I didn't speak up because I was a

Units of Measurement Having Special Names in the International System of Units (SI)

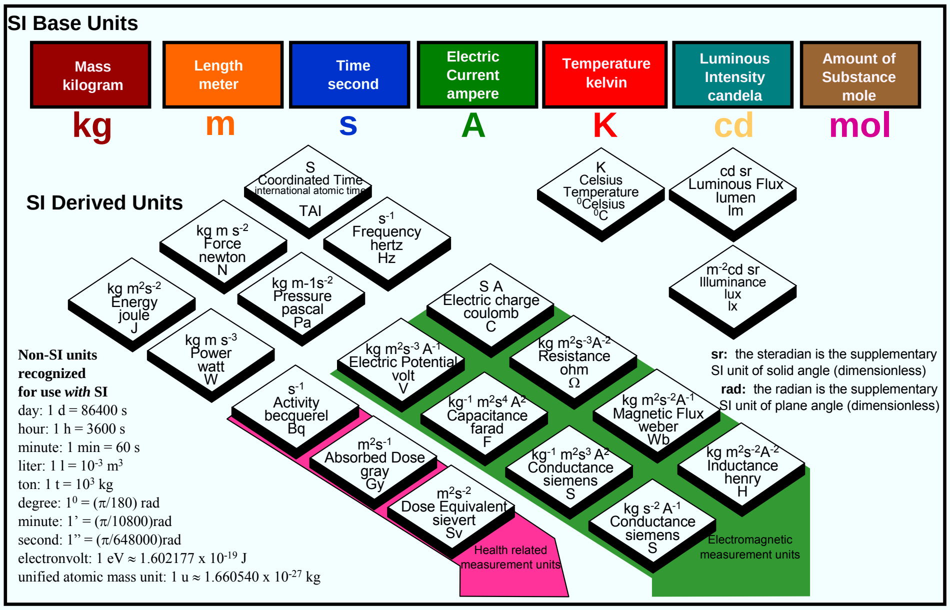

8-30

Time interval (frequency) is the quantity that can be determined with the highest accuracy. It can be measured with an accuracy greater than 1 part in 10^{13}. With the help of satellites, it is possible to compare the time scales kept by the national laboratories, worldwide, to an accuracy of ~1 ns. Time, therefore, plays a central role in metrology and in the definitions of SI units.

The SI consists of seven base units and a number of derived units, as shown above. Shown on the next page are the units that do NOT depend on the unit of time.

R. J. Douglas, et. al, "Frequency Standards, Timekeeping, and Traceable Services at the National Research Council of Canada," Proc. 28th Ann. Precise Time & Time Interval (PTTI) Applications & Planning Meeting, pp. 65-80, 1996.

The chart above, and the one on the next page, were provided by R.J. Douglas, National Research Council Canada, 1997.

E. R. Cohen & B. N. Taylor, “The Fundamental Physical Constants,” Physics Today, pp. BG7-BG14, August 1997.

B. W. Petley, "Time and Frequency Fundamental Metrology," Proceedings of the IEEE, vol. 79, pp. 1070-1076, 1991.

Units of Measurement Having Special Names in the SI Units, NOT Needing Standard Uncertainty in SI Average Frequency

SI Base Units

Mass
kilogram
kg

Temperature
kelvin
K

Amount of Substance
mole
mol

SI Derived Units

K
Celsius Temperature
^{0}Celsius
^{0}C

Non-SI units recognized for use *with* SI

ton: 1 t = 10^3 kg
degree: $1^0 = (\pi/180)$ rad
minute: 1' = (π/10800)rad
second: 1" = (π/648000)rad
unified atomic mass unit: 1 u $\approx 1.660540 \times 10^{-27}$ kg

-

CHAPTER 9
Related Devices and Application

9

-

Discrete-Resonator Crystal Filter

A Typical Six-pole Narrow-band Filter

Layout

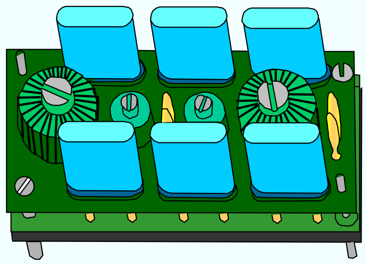

Circuit

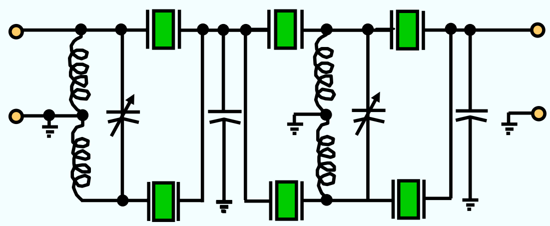

9-1

Most crystal filters are bandpass filters. There are two types, one which consists of discreet resonators, as illustrated above, and the other, monolithic crystal filters which consist of acoustically coupled resonators, as illustrated on the next page.

R. C. Smythe and R. S. Wagers, "Piezoelectric and Electromechanical Filters," in E. A. Gerber and A. Ballato, Precision Frequency Control, Vol. 1, pp. 185-269, Academic Press, 1985.

R. G. Kinsman, Crystal Filters, John Wiley & Sons, 1987.

Monolithic Crystal Filters

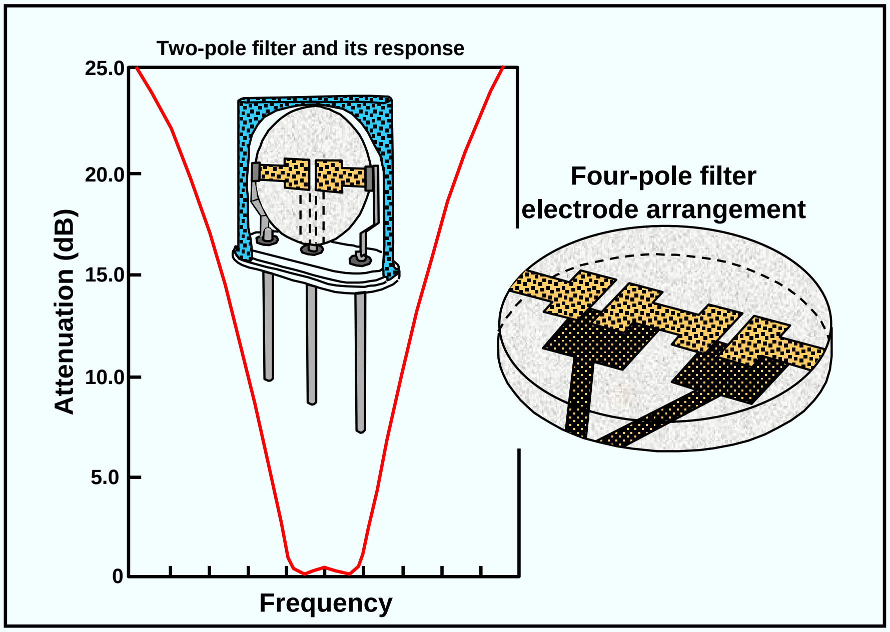

9-2

R. C. Smythe and R. S. Wagers, "Piezoelectric and Electromechanical Filters," in E. A. Gerber and A. Ballato, Precision Frequency Control, Vol. 1, pp. 185-269, Academic Press, 1985.

R. G. Kinsman, Crystal Filters, John Wiley & Sons, 1987.

Surface Acoustic Wave (SAW) Devices

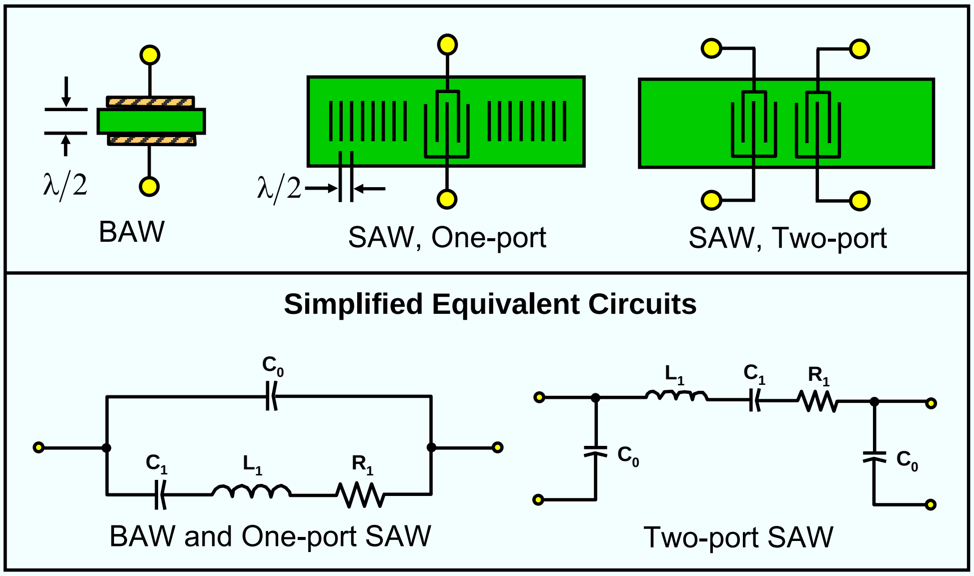

9-3

The primary application of SAW devices is in filters. Applications in precision frequency control and timing are limited because the long term stability and temperature stability of the best bulk-acoustic-wave (BAW) devices are better than those of the best SAW devices.

For BAW resonators, the plate thickness determines then fundamental-mode frequency. For SAW resonators, the interdigital transducers' (IDT) spacings determine the frequency. For quartz, a 300 MHz BAW resonator plate is 6 μm thick. A 2.6 GHz SAW resonator has 0.3 μm IDT spacings, and can be produced by e-beam lithography.

In SAW resonators, wave motion is concentrated at the surface of the crystal; motion decays exponentially with distance from surface; 90 to 95% of the energy is within one acoustic wavelength of the surface.

In one-port SAW and BAW resonators, the static capacitance, C_0, provides a low-impedance path that can mask out the desired resonance at high f's. An external inductor is usually placed in parallel with C_0 to "resonate out" C_0. In two-port SAW resonators, C_0 does not shunt the motional arm of the equivalent circuit, therefore, two-port SAW resonators are preferred in many applications. See chapter 4 for phase noise comparisons with BAW devices.

D. P. Morgan, Surface-Wave Devices for Signal Processing, Elsevier, 1985.

D. P. Morgan, "History of SAW Devices," Proc. 1998 IEEE Int'l Frequency Control Symp., pp. 439-460, 1998.

F. S. Hickernell, "Surface Acoustic Wave Technology - Macrosuccess through Microseisms," in Ultrasonic Instruments & Devices II, edited by R.N. Thurston, A. D. Pierce, vol. ed. E. Papadakis, Physical Acoustics Vol. XXIV, Academic Press, pp. 135-207, 1999.

W. R. Shreve and P. S. Cross, "Surface Acoustic Waves and Resonators," in E. A. Gerber and A. Ballato, Precision Frequency Control, Vol. 1, pp. 119-145, Academic Press, 1985.

R. S. Wagers, "Surface-Acoustic-Wave Filters," and "SAW Bandpass and Bandstop Filters," in E. A. Gerber and A. Ballato, Precision Frequency Control, Vol. 1, pp. 230-249, and pp. 257-266, Academic Press, 1985.

Quartz Bulk-Wave Resonator Sensors

In frequency control and timekeeping applications, resonators are designed to have minimum sensitivity to environmental parameters. In sensor applications, the resonator is designed to have a high sensitivity to an environmental parameter, such as temperature, adsorbed mass, force, pressure and acceleration.

Quartz resonators' advantages over other sensor technologies are:

- High resolution and wide dynamic range (due to excellent short-term stability); e.g., one part in 10^7 (10^{-6} g out of 20 g) accelerometers are available, and quartz sorption detectors are capable of sensing 10^{-12} grams.
- High long-term accuracy and stability, and
- Frequency counting is inherently digital.

9-4

D. S. Ballantine, Jr., et. al, Acoustic Wave Sensors - Theory, Design, and Physico-Chemical Applications, Academic Press, 1997.

Special Issue on Sensors and Actuators, IEEE Trans. on Ultrasonics, Ferroelectrics, and Frequency Control, vol. 45, September 1998.

E. P. EerNisse, R. W. Ward and R. B. Wiggins, "Survey of Quartz Bulk Resonator Sensor Technologies," IEEE Transactions on Ultrasonics, Ferroelectrics, and Frequency Control, Vol. 35, No. 3, pp. 323-330, May 1988.

G. G. Guilbault and J. M. Jordan, "Analytical Uses of Piezoelectric Crystals: A Review," CRC Critical Reviews in Analytical Chemistry, Vol. 19, Issue 1, pp. 1-28, 1988.

J. J. McCallum, "Piezoelectric Devices for Mass and Chemical Measurements," Analyst, Vol. 114, pp. 1173-1189, Oct. 1989.

Tuning Fork Resonator Sensors

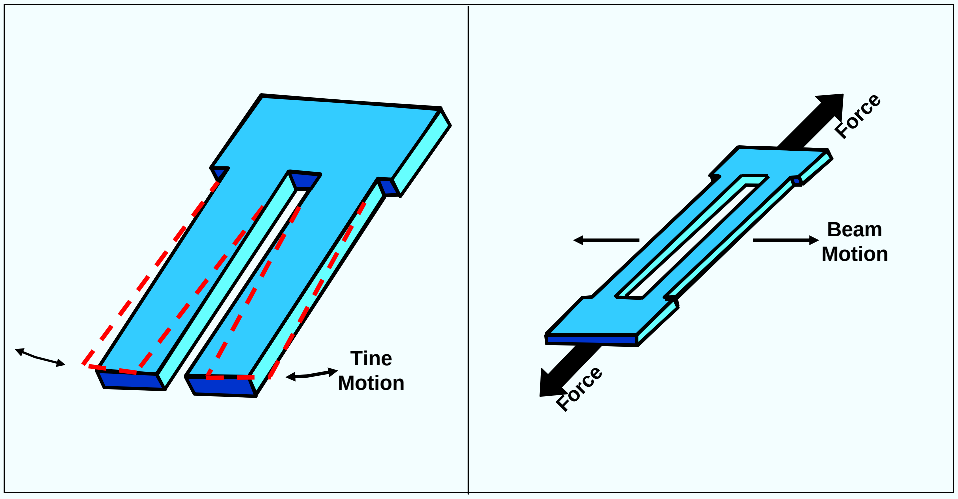

Photolithographically produced tuning forks, single- and double-ended (flexural-mode or torsional-mode), can provide low-cost, high-resolution sensors for measuring temperature, pressure, force, and acceleration. Shown are flexural-mode tuning forks.

The resonant frequency and Q of a vibrating tuning fork or beam resonator, whether single, double or triple-beam, are sensitive to forces, temperature, and the fluid surrounding the resonator. Such resonators have been used as accelerometers, pressure sensors, force sensors, gas density sensors, vacuum gauges, and thermometers.

E. P. EerNisse, R. W. Ward and R. B. Wiggins, "Survey of Quartz Bulk Resonator Sensor Technologies," IEEE Transactions on Ultrasonics, Ferroelectrics, and Frequency Control, Vol. 35, No. 3, pp. 323-330, May 1988.

Dual Mode SC-cut Sensors

•**Advantages**

- Self temperature sensing by dual mode operation allows separation/compensation of temp. effects
- Thermal transient compensated
- Isotropic stress compensated
- Fewer activity dips than AT-cut
- Less sensitive to circuit reactance changes
- Less sensitive to drive level changes

•**Disadvantage**

- Severe attenuation in a liquid
- Fewer SC-cut suppliers than AT-cut suppliers

9-6

See discussion of the dual-mode technique in Chapters 2 and 3.

J. R. Vig, "Dual-mode Oscillators for Clocks and Sensors," Proc. 1999 IEEE Int'l Ultrasonics Symposium

Separation of Mass and Temperature Effects

- Frequency changes

$$\underset{\text{total}}{\frac{\Delta f(m,T,x)}{f_o}} = \underset{\text{mass}}{\frac{\Delta f(m)}{f_o}} + \underset{\text{temperature}}{\frac{\Delta f(T)}{f_o}} + \underset{\text{other effects}}{\frac{\Delta f(x)}{f_o}}$$

- Mass: adsorption and desorption

$$\frac{\Delta f(m)}{f_o} \cong -\frac{\Delta m}{m_o}$$

- Temperature/beat frequency

$$\frac{\Delta f(T)}{f_o} = \frac{\sum_i c_i \cdot \Delta f_\beta^i}{f_o} \qquad f_\beta \equiv 3f_{c1}(T) - f_{c3}(T)$$

9-7

When, for example, a mass is deposited onto a resonator (e.g., a quartz crystal microbalance), there is always a temperature change accompanying the mass change. The temperature change is caused by the heat of adsorption, and by the heat emitted by the evaporation source. The frequency change due to mass deposition is due to the combined effects of the mass change and the temperature change. The dual mode technique yields two equations with two unknowns which allows the separation of the mass change induced frequency change from the temperature caused frequency change.

The mass change alone can be determined without having to calibrate the beat frequency, f_β, as a function of temperature. However, by calibrating the f_β ασ α φυνχτιον οφ τεμπερατυρε, ονε μαψ, φορ εξαμπλε, περφορμ συρφαχε στυδιεσ ασ α φυνχτιον οφ τεμπερατυρε.

D. E. Pierce, Y. Kim, and J. R. Vig, "A temperature insensitive quartz microbalance," Proc. 1997 IEEE Int'l Frequency Control Symp., pp. 41-48.

J. R. Vig, "Dual-mode Oscillators for Clocks and Sensors," Proc. 1999 IEEE Int'l Ultrasonics Symposium

US Pat. No. 5869763, J. R. Vig and R. L. Filler, "Method of measuring mass change using a quartz crystal microbalance," Feb. 1999.

Y. Kim, "Sensing of organic vapor adsorption on gold using a temperature insensitive microbalance," Proc. 1999 IEEE Int'l Frequency Control Symp.

Dual-Mode Pressure Sensor

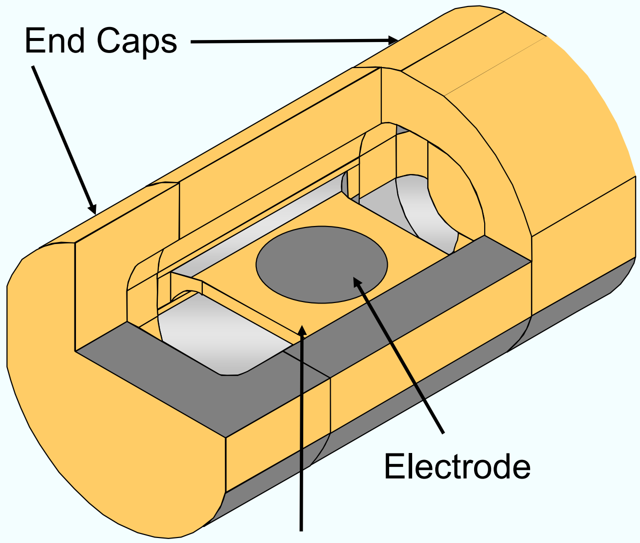

9-8

High precision pressure sensors employ quartz thickness shear resonators. The frequencies of these vary not only with pressure, but also with temperature. Temperature control, or compensation is used to minimize the errors due to temperature effects. Some pressure sensors have used a temperature sensor that is external, but in close proximity, to the pressure sensing resonator, and shielded from the applied pressure. However, when a temperature gradient exists between the pressure and temperature sensors, such as may occur under pressure and temperature transients, the accuracy of pressure measurement is degraded.

Dual-mode pressure sensors have been proposed in which the b-mode is stress compensated and the c-mode is temperature compensated. In such a sensor, the b-mode indicates primarily the temperature of the sensing resonator, and the c-mode indicates the applied pressure. As the b-mode's frequency depends on the temperature of the resonator's vibrating volume, the effects of temperature gradients are greatly reduced. Under pressure transients, especially, dual-mode pressure sensors allow for superior temperature sensing and compensation accuracy, and superior pressure sensing accuracy. The above diagram shows such a dual mode pressure sensor.

R. J. Besson, J. J. Boy, B. Glotin, Y. Jinzaki, B. Sinha, and M. Valdois, "A dual-mode thickness-shear quartz pressure sensor," IEEE Trans. Ultrason. Ferroelect. Freq. Contr., Vol. 40, pp. 584-591, 1993.

N. Matsumoto, Y. Sudo, B. Sinha and M. Niwa, "Long-term stability and performance characteristics of crystal gauge at high pressures and temperatures," Proc. 1999 IEEE Int'l Frequency Control Symp.

CHAPTER 10
Proceedings Ordering Information, Standards, Website, and Index

-

IEEE International Frequency Control Symposium
PROCEEDINGS ORDERING INFORMATION

NO.	YEAR	DOCUMENT NO.	SOURCE*
10	1956	AD-298322	NTIS
11	1957	AD-298323	NTIS
12	1958	AD-298324	NTIS
13	1959	AD-298325	NTIS
14	1960	AD-246500	NTIS
15	1961	AD-265455	NTIS
16	1962	AD-285086	NTIS
17	1963	AD-423381	NTIS
18	1964	AD-450341	NTIS
19	1965	AD-471229	NTIS
20	1966	AD-800523	NTIS
21	1967	AD-659792	NTIS
22	1968	AD-844911	NTIS
23	1969	AD-746209	NTIS
24	1970	AD-746210	NTIS
25	1971	AD-746211	NTIS
26	1972	AD-771043	NTIS
27	1973	AD-771042	NTIS
28	1974	AD-A011113	NTIS
29	1975	AD-A017466	NTIS
30	1976	AD-A046089	NTIS
31	1977	AD-A088221	NTIS
32	1978	AD-A955718	NTIS

NO.	YEAR	DOCUMENT NO.	SOURCE*
33	1979	AD-A213544	NTIS
34	1980	AD-A213670	NTIS
35	1981	AD-A110870	NTIS
36	1982	AD-A130811	NTIS
37	1983	AD-A136673	NTIS
38	1984	AD-A217381	NTIS
39	1985	AD-A217404	NTIS
40	1986	AD-A235435	NTIS
41	1987	AD-A216858	NTIS
42	1988	AD-A217275	NTIS
43	1989	AD-A235629	NTIS
44	1990	AD-A272017	NTIS
45	1991	AD-A272274	NTIS
46	1992	92CH3083-3	IEEE
47	1993	93CH3244-1	IEEE
48	1994	94CH3446-2	IEEE
49	1995	95CH3575-2	IEEE
50	1996	96CH35935	IEEE
51	1997	97CH36016	IEEE
52	1998	98CH36165	IEEE
53	1999	99CH36313	IEEE
54	2000	00CH37052	IEEE
55	2001	01CH37218	IEEE

Please check with NTIS or IEEE for current pricing. IEEE members may order IEEE proceedings at half-price.

*NTIS - National Technical Information Service
5285 Port Royal Road, Sills Building
Springfield, VA 22161, U.S.A.
Tel: 703-487-4650
Fax: 703-321-8547
E-mail: info@NTIS.fedworld.gov
http://www.fedworld.gov/ntis/search.htm

*IEEE - Inst. of Electrical & Electronics Engineers
445 Hoes Lane
Piscataway, NJ 08854, U.S.A.

Tel: 800-678-4333 or 908-981-0060
E-mail: customer.services@ieee.org
http://www.ieee.org/ieeestore/ordinfo.html

Prior to 1992, the Symposium's name was the "Annual Symposium on Frequency Control," and in 1992, the name was IEEE Frequency Control Symposium (i.e., without the "International").

-

Specifications And Standards Relating To Frequency Control - 1

Institute Of Electrical & Electronic Engineers (IEEE)

Order from: IEEE Service Center
445 Hoes Lane
Piscataway, NJ 08854
Telephone: (732) 981-0060
http://standards.ieee.org/catalog/contents.html

176-1987 (ANSI/IEEE) Standard on Piezoelectricity

177-1966 Standard Definitions & Methods of Measurements of Piezoelectric Vibrators

180-1986 (ANSI/IEEE) Definitions of Primary Ferroelectric Crystal Terms (SH10553)

319-1971 (Reaff 1978) Piezomagnetic Nomenclature (SH02360)

1139-1988 Standard Definitions of Physical Quantities for Fundamental Frequency & Time Metrology (SH12526)

IEEE Std **1193**-1994 (ANSI) IEEE Guide for Measurement of Environmental Sensitivities of Standard Frequency Generators

Department of Defense (DOD)

Order from: Naval Pubs & Form Center
5801 Tabor Avenue
Philadelphia, PA 19120
Telephone: (215) 697-2000
http://www.dscc.dla.mil/Programs/MilSpec/default.asp
http://stinet.dtic.mil/str/dodiss4_fields.html

General Specs for:

MIL-C-3098 Crystal Unit, Quartz

MIL-C-24523 (SHIPS) Chronometer, Quartz Crystal

MIL-F-15733 Filters & Capacitors, Radio Interference

MIL-F-18327 Filters, High Pass, Band Pass Suppression and Dual Processing

MIL-F-28861 Filters and Capacitors, Radio Frequency Electro-magnetic Interference Suppression

MIL-F-28811 Frequency Standard, Cesium Beam Tube

MIL-H-10056 Holders (Encl), Crystal

MIL-O-55310 Oscillators, Crystal
MIL-O-39021 Oven

MIL-S-4933(ER) Surface Acoustic Wave Devices

MIL-STD-683 Crystal Units, Quartz/Holders, Crystal

MIL-STD-188-115 Interoperability & Performance Standards for Communications, Timing & Synchron-ization Subsystems

MIL-STD-1395 Filters & Networks, Selection & Use

MIL-T-28816(EC) Time Frequency Standard, Disciplined AN/URQ-23

MIL-W-46374D Watch, wrist: General purpose

MIL-W-87967 Watch, wrist: Digital

-

Specifications And Standards Relating To Frequency Control - 2

US Government Standards

FED-STD-1002 Time & Frequency Reference Information in Telecommunication Systems

Federal Standard 1037C: Glossary of Telecommunications Terms
http://www.its.bldrdoc.gov/fs-1037/

IRIG Stdrd 200-98 - IRIG Serial Time Code Formats
http://tecnet0.jcte.jcs.mil/RCC/manuals/200/index.htm
l

A source of many standards:

American National Standards Institute (ANSI)
1819 L Street, NW
Suite 600
Washington, DC 20036
http://webstore.ansi.org/ansidocstore/default.asp

Electronic Industries Association (EIA)

Order from: Electronic Industries Assoc.
2001 Eye Street, NW
Washington, DC 20006
Telephone: (202) 457-4900

(a) Holders and Sockets

EIA-192-A, Holder Outlines and Pin Connections for Quartz Crystal Units (standard dimensions for holder types)

EIA-367, Dimensional & Electrical Characteristics Defining Receiver Type Sockets (including crystal sockets)

EIA-417, Crystal Outlines (standard dimensions and pin connections for current quartz crystal units, 1974)

(b) Production Tests

EIA-186-E, (All Sections) Standard Test Methods for Electronic Component Parts
EIA-512, Standard Methods for Measurement of Equivalent Electrical Parameters of Quartz Crystal Units, 1 kHz to 1 GHz, 1985

EIA-IS-17-A, Assessment of Outgoing Non-conforming Levels in Parts per Million (PPM)

EIA-IS-18, Lot Acceptance Procedure for Verifying Compliance with Specified Quality Level in PPM

(c) Application Information

EIA Components Bulletin No. CB6-A, Guide for the Use of Quartz Crystal Units for Frequency Control, Oct. 1987

(d) EIA-477, Cultured Quartz (Apr. 81)

EIA-477-1, Quartz Crystal Test Methods (May 1985)

International Electro-Technical Commission (IEC)

Order from: (ANSI) American Nat'l. Standard Inst.
1430 Broadway
New York NY 1001
Telephone: (212) 354-3300
http://webstore.ansi.org/ansidocstore/default.asp

IEC Publications Prepared by TC 49:

-

Specifications And Standards Relating To Frequency Control - 3

122: Quartz crystal units for frequency control and selection

122-2 (1983) Part 2: Guide to the use of quartz crystal units for frequency control and selection

122-2-1 (1991) Section One: Quartz crystal units for microprocessor clock supply (Amendment 1 - 1993)

122-3 (1977) Part 3: Standard outlines and pin connection (Amendment 2 - 1991, Amendment 3 - 1992, Amendment 4 - 1993)

283 (1986) Methods for the measurement of frequency and equivalent resistance of unwanted resonances of filter crystal units

302 (1969) Standard definitions and methods of measurement for piezoelectric vibrators operating over the frequency range up to 30 MHz

314 (1970) Temperature control devices for quartz crystal units (Amendment 1 - 1979)

314A (1971) First supplement

368: Piezoelectric Filters

368-l (1992) Part 1: General information, standard values and test conditions

368-2 (1973) Part 2: Guide to the use of piezoelectric filters

368-2-1 (1988) Section One - Quartz crystal filters

368B (1975) Second supplement

368-3 (1991) Part 3: Standard Outlines

444: Measurement of quartz crystal unit parameters

444-1 (1986) Part 1: Basic method for the measurement of resonance frequency and resonance resistance of quartz crystal units by zero phase technique in a π - network with compensation of the parallel capacitance C_o

444-4 (1988) Part 4: Method for the measurement of the load resonance frequency f_L, load resonance R_L and the calculation of other derived values of quartz crystal units up 30 MHz

483 (1976) Guide to dynamic measurements of piezoelectric ceramics with high electromechanical coupling

642 (1979) Piezoelectric ceramic resonators and resonator units for frequency control and selection.
Chapter I: Standard Values and Conditions
Chapter II: Measuring and test conditions

642-2 (1994) Part 2: Guide to the use of piezoelectric ceramic resonator units

642-3 (1992) Part 3: Standard outlines

679: Quartz Crystal Controlled Oscillators

679-1 (1980) Part 1: General information, test conditions and methods (Amendment 1 - 1985)

679-2 (1981) Part 2: Guide to the use of quartz crystal controlled oscillators

679-3 (1989) Part 3: Standard outlines and lead connections (First supplement - 1991) (Amendment 1 - 1994)

689 (1980) Measurements and test methods for 32 kHz quartz crystal units for wrist watches and standard values

758 (1993) Synthetic quartz crystal; specifications and guide for use

-

Specifications And Standards Relating To Frequency Control - 4

862: Surface Acoustic Wave (SAW) Filters:

862-1 (1989) Part 1: General Information, standard values and test conditions, Chapter I: General information and standard values, Chapter II: Test conditions

862-2 (1991) Part 2: Guide to the use of surface acoustic wave filters (Chapter III)

862-3 (1986) Part 3: Standard outlines (Chapter IV)

1019: Surface Acoustic Wave (SAW) Resonators

1019-1-1 (1990) Part 1: General information, standard values and test conditions, Section 1 - General information and standard values

1019-1-2 (1993) Section 2: Test conditions

1019-1-3 (1991) Part 3: Standout outlines and lead connections
1080 (1991) Guide to the measurement of equivalent electrical parameters of quartz crystal units

1178-1 (1993) Quartz crystal units - a specification in the IEC Quality Assessment System for Electronic Components (IECQ) Part 1: General Specification

1178-2 (1993) Part 2: Sectional specification - Capability approval

1178-2-1 (1993) Part 2: Sectional specification - Capability approval, Section 1: Blank detail specification

1178-3 (1993) Part 3: Sectional specification - Qualification approval

1178-3-1 (1993) Part 3: Sectional specification - Qualification approval, Section 1: Blank detail specification

1240 (1994) Piezoelectric devices - preparation of outline drawings of surface-mounted devices (MSD) for frequency control and selection, general rules

1253: Piezoelectric ceramic resonators - a specification in the IEC quality assessment system for electronic components (IECQ)

1253-1 (1993) Part 1: Generic specification - qualification approval

1253-2 (1993) Part 2: Sectional specification - qualification approval

1253-2-1 (1993) Section 1 - Blank detail specification - Assessment Level E

1261: Piezoelectric Ceramic Filters for use in Electronic Equipment, a specification in the IEC quality assessment system for electronic components (IECQ)

1261-1 (1994) Part 1: General specifications, qualification approval

1261-2 (1994) Part 2: Sectional specifications, qualification approval

1261-2-1 (1994) Part 2: Section 1, Blank detail specification, Assessment Level E

International Telecommunication Union

Time signals and frequency standards emissions, List of ITU-R Recommendations
http://www.itu.int/rec/recommendation.asp?type=products&parent=R-REC-tf

-

Frequency Control Website

A huge amount of frequency control information can be found at

http://www.ieee-uffc.org/fc

Available at this site are >100K pages of information, including the full text of all the papers ever published in the Proceedings of the Frequency Control Symposium, i.e., since 1956, reference and tutorial information, nine complete books, historical information, and links to other web sites, including a **directory of company web sites.**

Some of the information at this website is available only to IEEE UFFC Society members.

-

EFRATOM Model FRS-C 10MHz Rubidium Clock.

Model FRS-C

Most surplus EFRATOM units found today are more then 15 years old. Due to there age and condition of operation, many may be considered by some to be at the end of there life.

I believe that age and period of continuous operation is not the big contributing factor to end of life, scrap the unit to the junk draw.

It is component failure due to long exposures to high heat that causes failure to more then 99% of the 20 units I have repaired,

The following is a result of repairing 20 units over a period of 3 months around 4 years ago. 3 months included some brief study of the Zeeman affect and how Rb resonance works

The main area to consider is within the physics package. There are two essentially 2 blocks that need careful consideration, they are:-

1. The lamp and lamp support board, the support board that holds the Rubidium lamp housing.
2. Resonator cavity and heating ring & circuit.

Figure 1, Lamp assembly & PCB's

The Rubidium (Rb) lamp does not have a filament. The function of the lamp assembly is to generate the right Rb Spectral lines ˜ (768nm). Rb light (Plasma) is generated as a result of a 80~100 MHz oscillator and heat generated from the lamp support housing.

Figure 1 above shows the lamp ignited as a result of +24 vdc on pin Z3 as shown, the photo shows a blueish discharge. Once ingited, cut back the Z3 voltage to +17 vdc.

Next add +12 vdc toZ2 and then +24vdc to Z1. The current consumption on the +24vdc rail should be approx. 400mA. After about 2 minutes when the housing is temperature stabilized to approx. 84 degrees C, the following should be observed:-

- The current drops to approx. 200mA
- The Plasma discharge colour has an added purple haze around the outside, indicating proper Rb vapour pressure in the lamp envelope.

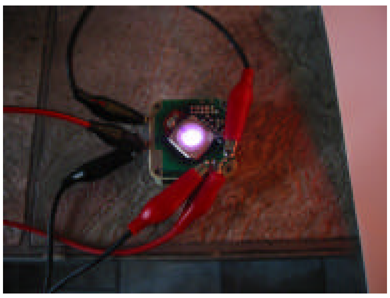

Figure 2, proper Rb ignition

Author, G Molenkamp, (vk3fgjm@commtelns.com)

Proper ignition and the right housing temperature with maintain the correct Rb vapor pressure resulting in an added purple hazy ring within the lamp and the surrounding Teflon support insulator.

Figure 2 shows the added purple haze, it is important now to check the housing operating temperature. Although the manual states 106°C, infact 106°C is the temp within the lamp. The emitted light is a combined result of Plasma discharge and heat.

The problem with the lamp assembly.

Resistor R6 fails, resulting in the unit takes a long time to lock, in many cases it may never lock.
100% failure of R6, this is a 1/8 watt 10K resistor. Pure carbon resistors generally increase in value, however 100% have shown that they decrease in value, down to 4.6K.

R6 is located very close to the lamp housing, but so are other resistors. Other resistors have been measured as O.K, within their respective +/- tolerance.

R6 failing forces Q2 to turn on hard .745vdc on the base and therefore stops Q1 from turning on hard enough to heat the lamp assembly to it’s correct operating temperature. The correct operation should see approx. 1.3 on Q2 collector.

Check the following things:-

1. Incorrect multiplier freq. injected into cavity (60MHz) to many harmonics

2. Step recovery Diode failed, check diode via diode tester, if measuring .745VDC it's O.K

3. Check R24 & R30 on Multiplier PCB, the following voltages should be checked, if not check and adjust:-
   Junction R25 & R27 it shuld read 3.38vdc +/-5%
   Junction R30 & R22 it should read 3.38vdc +/-5%
   20MHz input pin 1 at flex board should read 2.5vdc
   Junction C30 & L8 should read 3.38vdc +/-5%
   60MHz output at A5P1 Junction of C30 & L8 should be 2V amplitute and offset 2.5 vdc from ground.
   Check modulated 127Hz at A5J1 pin 5
   Check 5.312MHz signal at A5J1 pin 9

4. Check Lamp oscillator board for the following:-
   Check Plasma colpitts oscillator is set to 80~100 MHz, adjust C11 carefully with non-metallic adjustment tool on Spectrum Analyzer, ensure no harmonics.
   Apply power to Z3 +17vdc and check Plasma lamp, should see blueish glow.
   Check there is no dark spots on lamp, Rubidium has moved from pinch area.
   Check lamp oven, although manual states operating temp. is 106°C, actual Lamp housing should be 84 Degrees C +/- 5%

Author, G Molenkamp, (vk3fgjm@commtelns.com)

5. TP1 on the servo board is the best indicator of good Rb light, if the correct spectral lines are not there then the wave shape below will never be seen, this is the resonance lock null signal, this signal is when Rb spectral lines and step recover multiplier resonate, this is called the Zeeman affect match causing a zero beat, thereby canceling Rb light.

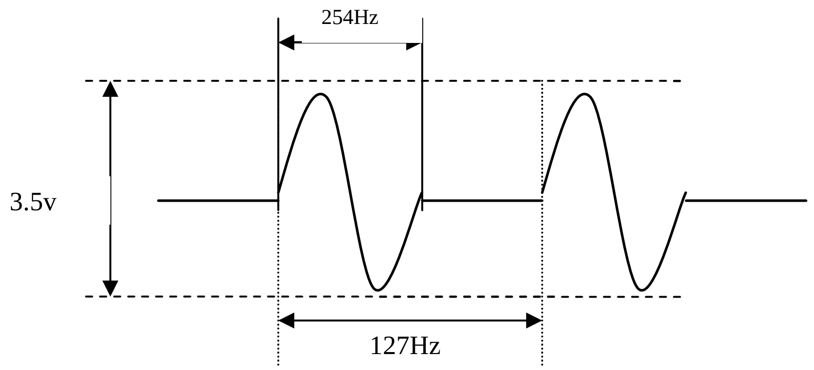

Figure 3, Test point servo waveform.

For those who are interested in Rb lamp rejuvenation, try a trick I have learnt.

First carefully remove the lamp from it's housing and if the Rb material looks like is splattered over the inside wall of the glass, this means Rb material is no longer consolidated in the pinch of the glass lamp. To reconsolidate Rb material use a typical heat gun / paint stripper gun and uniformly rotate the lamp heating the glass, the result will be Rb consolidation at the pinch. I have rejuvenated all 20 lamps with 100% success. The lamp voltage of my FRS made in 44th week of 1990 is as strong as ever. The 20 repaired and sold are all perfect, all servo waveforms were a carbon copy of the figure above.

Good luck.

Author, G Molenkamp, (vk3fgjm@commtelns.com)