HEWLETT PACKARD

TROUBLESHOOTING AND REPAIR MANUAL
VOLUME 2

8566B/8568B SPECTRUM ANALYZER IF-DISPLAY SECTION

SERIAL NUMBERS

This manual applies directly to IF-Display sections with serial numbers prefixed 2403A.

COPYRIGHT © HEWLETT-PACKARD COMPANY, 1984
1212 VALLEY HOUSE DRIVE, ROHNERT PARK, CALIFORNIA, 94928, U.S.A.

MANUAL PART NUMBER
HP 8566B: 08566-90042
HP 8568B: 08568-90043

MICROFICHE PART NUMBER
HP 8566B: 08566-90048
HP 8568B: 08568-90048

Printed: December 1984

SAFETY SYMBOLS

The following safety symbols are used throughout this manual and in the instrument. Familiarize yourself with each of the symbols and its meaning before operating this instrument.

Instruction manual symbol. The instrument will be marked with this symbol when it is necessary for the user to refer to the instruction manual in order to protect the instrument against damage. Location of pertinent information within the manual is indicated by use of this symbol in the table of contents.

Indicates dangerous voltages are present. Be extremely careful.

CAUTION

The CAUTION sign denotes a hazard. It calls attention to a procedure which, if not correctly performed or adhered to, could result in damage to or destruction of the instrument. Do not proceed beyond a CAUTION sign until the indicated conditions are fully understood and met.

WARNING

The WARNING sign denotes a hazard. It calls attention to a procedure which, if not correctly performed or adhered to, could result in injury or loss of life. Do not proceed beyond a WARNING sign until the indicated conditions are fully understood and met.

GENERAL SAFETY CONSIDERATIONS

WARNING

BEFORE THIS INSTRUMENT IS SWITCHED ON, make sure it has been properly grounded through the protective conductor of the ac power cable to a socket outlet provided with protective earth contact. Any interruption of the protective (grounding) conductor, inside or outside the instrument, or disconnection of the protective earth terminal can result in personal injury.

WARNING

There are voltages at many points in the instrument which can, if contacted, cause personal injury. Be extremely careful. Any adjustments or service procedures that require operation of the instrument with protective covers removed should be performed only by trained service personnel.

CAUTION

BEFORE THIS INSTRUMENT IS SWITCHED ON, make sure its primary power circuitry has been adapted to the voltage of the ac power source. Failure to set the ac power input to the correct voltage could cause damage to the instrument when the ac power cable is plugged in.

VOLUME 2

CONTENTS

MAJOR TAB	CONTENTS
IF-Display Section General Information	General information on manual contents, instrument storage and shipment.
Signature Analysis Description	An explanation of the use of Signature Analysis diagrams for digital troubleshooting.
IF Overall Block Diagram	Mnemonic Table, Instrument Bus Pin Connection Table, and Overall IF Block Diagram.
A1 Display Section Block Diagram	A1 Display Section Troubleshooting information, Block Diagram, and A1A1 through A1A10 service sheets.
A3 Digital Storage Troubleshooting	A3 Digital Storage Troubleshooting information, Block Diagram, and A3A1 through A3A10 service sheets.
A4 IF Section Troubleshooting	A4 Section Block Diagram, and A4A1 through A4A10 service sheets.
General Parts Listing	Replaceable parts information and parts identification figures.
Major Assembly and Component Locations	Major assembly identification figure.

IF SECTION SERVICE

INTRODUCTION

This volume of the Troubleshooting and Repair Manual contains information for the troubleshooting and repair of the IF-Display Section of the instrument. This information is combined in service sheets and indexed with tabs for quick reference. General or overall service information for the instrument is contained in Volume 1 of this manual.

SERVICE SHEETS

The service sheets in each volume of this manual are organized in alpha-numeric order and are indexed with tabs to make it easy to locate a specific service sheet. Each of the service sheets contain the following information:

Circuit Description (where practical)
Troubleshooting Hints (where practical)
Replaceable Parts List
Block Diagram (where practical)
Component Location Illustration
Schematic Diagram

Also included, where applicable, are Signature Analysis Diagrams for troubleshooting digital circuits.

REPAIR PROCEDURES

Repair procedures are included for use in removing and replacing assemblies for repair. They are located in the following sections:

Front-Panel LED Replacement
Tab: A1A1 Keyboard, A1A2 Z Axis Amplifier

Front Panel Removal and Repair
Tab: A1A1 Keyboard, A1A2 Z Axis Amplifier

CRT Replacement
Tab: A1A3 High Voltage Regulator

IF-Display Section Internal Fuse Replacement
Tab: A1A6 ± 15V Regulator

MAJOR ASSEMBLY AND COMPONENT LOCATIONS

Major assembly and component location illustrations for the IF Section are located at the rear of this volume.

TROUBLESHOOTING

Troubleshooting information for the IF Section is divided into three levels as follows:

Instrument Level
Signature Analysis Description

Section Level
IF Overall Block Diagram
A1 Display Section Block Diagram
A3 Digital Storage Troubleshooting
A4 IF Section Troubleshooting

Assembly Level
Most assemblies have troubleshooting hints immediately following their circuit descriptions. Troubleshooting information is also located on assembly-level block diagrams, notes, and schematics.

All assemblies are indexed by tab except for the ones listed in Table 1 at the end of this section. Table 1 lists the index tabs where these assemblies can be found.

SIGNATURE ANALYSIS

This instrument has been designed to incorporate signature analysis. In the appropriate sections, signature analysis diagrams are included. For an explanation of the use of these diagrams, refer to the Signature Analysis Description Tab.

STORAGE AND SHIPMENT

Environment

The instrument may be stored or shipped in environments within the following limits:

Temperature ..... −40°C to +75°C
Humidity ..... 5% to 90% at 0° to 40°C
Altitude ..... Up to 15,240 meters (50,000 feet)

The instrument should be protected from temperature extremes which might cause condensation within the instrument.

Original Packaging

It is recommended that the original factory packaging materials be retained for use when shipping the instrument. If original packaging material cannot be retained, packaging materials identical to those used in factory packaging are available through Hewlett-Packard offices. Part numbers and descriptions of the packaging materials are listed in Figure 1.

The combined weight of the two instrument sections is approximately 50 kg (112 lbs). Because of the weight involved, do not package the instrument sections fastened together as one unit. The instrument sections must be separated and packaged in separate containers. The quantity of packaging materials in Figure 1 is for only one instrument section.

If the instrument is being returned to Hewlett-Packard for servicing, attach a tag to each carton indicating the type of service required, return address, model number, and full serial number. For your convenience, a supply of tags is included at the end of this section. Also, mark each container FRAGILE to assure careful handling. In any correspondence, refer to the instrument by model number and full serial number.

Other Packaging

If it is necessary to use packaging materials other than the type used in original factory packaging, the following general instructions should be followed.

a. Separate the two instrument sections and wrap each in heavy paper or plastic.

b. Place the instrument sections in separate containers with 8 to 10 cm (3 to 4 inches) of shock-absorbing material around all sides to provide firm cushioning and prevent movement inside the container. Protect front panels with cardboard. Double-wall corrugated cartons of 125 kg (275 lb) bursting strength are sufficient for shipping containers.

c. Seal each container securely and, if shipping to a Hewlett-Packard office or service center, attach a tag to each container indicating the type of service required, return address, model number, and full serial number. For your convenience, a supply of tags is included at the end of this section.

d. Mark each container FRAGILE to assure careful handling.

TABLE 1. ASSEMBLY LOCATIONS

Assembly	Tab Location
A1T1	A1A8 Rectifier, Block Diagram and General Parts Listing, Table 4
A1V1	A1A3 High Voltage Regulator, Block Diagram and General Parts Listing, Table 4
A1A11	A1A3 High VoltageRegulator, Block Diagram and General Parts Listing, Table 4
A2	Not Assigned

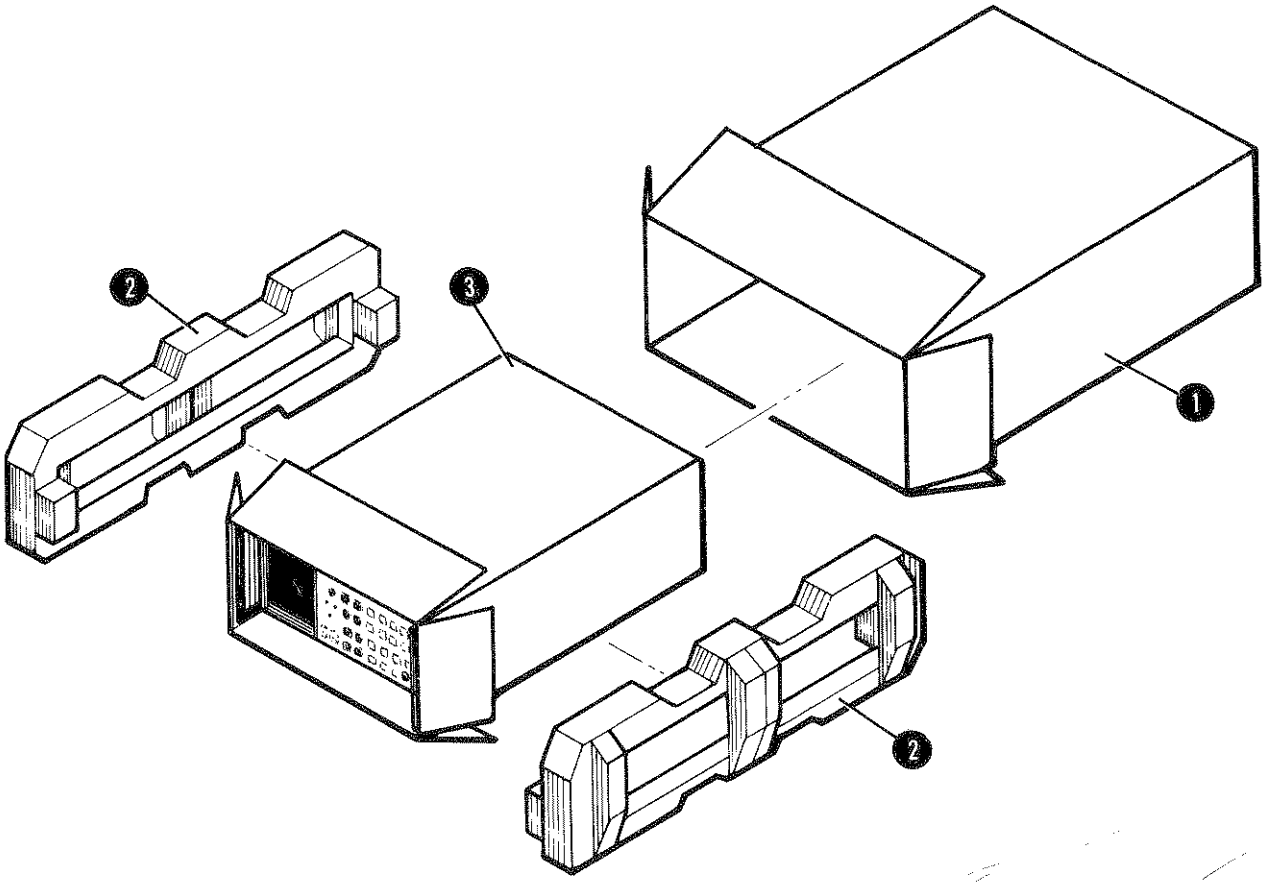

NOTE

FRONT HANDLES MUST BE MOUNTED FOR SHIPMENT.

Item	HP Part Number	C D	Qty	Description	Manufacturer Code	Mfr. Part Number
1	9211-4487	3	1	Outer Box	28480	9211-4487
2	5180-2319	5	2	Inner Foam Pad	28480	5180-2319
3	5180-2320	8	1	Inner Box	28480	5180-2320

FIGURE 1. PACKAGING FOR SHIPMENT USING FACTORY PACKAGING MATERIALS

SIGNATURE ANALYSIS GENERAL DESCRIPTION

This instrument has been designed to incorporate signature analysis. Troubleshooting the instrument using signature analysis requires the use of an HP Model 5005A, 5005B, or 5006B Signature Analyzer. The signature analyzer is a service tool that receives signals via a probe from the circuit under test and displays the result in the form of a digital signature that corresponds to specific data nodes in the circuit under test. For a complete description of signature analyzer operation, refer to the HP 5005A, 5005B, or 5006B Signature Analyzer Operating and Service Manual.

When it is possible to troubleshoot a circuit using signature analysis, a diagram of correct signatures is included with the service sheets for that assembly. The following diagram is included as a guide for the use of signature analysis diagrams.

The A3 Digital Storage section makes extensive use of signature analysis. Since the assemblies are very interactive, troubleshooting should be done on this section as a whole. Special test programs that exercise the circuits under test are used by the A3 section Signature Analysis. An explanation of these test programs is included in the "A3 Digital Storage Troubleshooting" tab uner the title "Digital Storage Signature Analysis/CRT Display Test Programs." Refer to the orange A3 Digital Storage tab for an explanation of the signature analysis troubleshooting strategy.

SIGNATURE ANALYSIS TROUBLESHOOTING

1. Connect signature analyzer and set controls according to diagram instructions.

2. Set up test configuration as indicated in the diagram, such as jumpering test points or removing test jumpers.

3. Verify the +5Vdc signature for the test being performed as indicated in green lettering on the main verification path (GREEN LINE). This signature can be verified by probing the +5Vdc supply. If +5Vdc signature is incorrect, check equipment settings and connections. Then check for activity at CLOCK, START, and STOP connections using signature analyzer probe. If there is no activity, refer to assembly schematic for troubleshooting.

4. Begin probing the printed circuit board at the beginning of the green line on the diagram. (Point A in the sample.)

5. Probe every point indicated by the green line.

6. If a bad signature is located (Point B in sample), the location is suspected bad. Information printed in red on the troubleshooting diagram (Point C) can help to trace the problem by indicating the source of the signal. For example, "18-12" indicates that the signature originates at U18 pin 12.

7. Check signature at its origin (D). If signature is still bad, go to input pin(s) related to that output (E). A red line connecting the input to the output indicates that the output is affected by only that input. A black line indicates an electrical connection between IC pins. If any input signature is bad, refer to assembly schematic to determine the origin of the input pin .

8. Verify signatures to inputs/outputs connected to a suspected bad location. If signatures are good, the printed circuit board, connectors, and solder joints should be checked for faults. After locating the faulty source, proceed with conventional troubleshooting.

9. Before replacing any suspected defective component, follow instructions printed in red and referenced by an asterisk(*) on the signature analysis troubleshooting diagram.

BOARD NUMBER

A3A7
INTERFACE
85662-60127

TITLE OF TEST OR CHECK

GENERAL INFORMATION OR INSTRUCTIONS

SIGNATURE DISPLAYED ON SIGNATURE ANALYZER

OUTPUT

INDICATES TEST NECESSARY FOR THESE PINS

IC PIN NUMBER 1

INDICATES WHERE TO GO (U6,PIN 6) IF AN INCORRECT SIGNATURE IS OBTAINED

U15 PIN 5 CONTROLS ONLY THIS OUTPUT

BEGINNING OF MAIN VERIFICATION PATH

INFORMATION AND INSTRUCTIONS FOR MAIN VERIFICATION PATH

INPUT

DS ADDRESS CHECK

U2

+0V
0000 81H7
253H 54A1
P09F 0000
0000 21FP
0000 8291
U604 0000
0000

+5V = 0A40

IF 5V IS NOT 0A40
GND P1-28 AND RECHECK.
CHECK RF A15 I/O.

REFER TO A3 DIGITAL STORAGE TROUBLESHOOTING,TEST SEQUENCE.

U6

73C6 +5V
7696 7696
7053
P6U0 CU3U
73C6 4596
UAA9

DECODER CHECK

QUALIFIER CHECK

U14

PSCF 253H
7696 73C6
+5V +5V
+5V P09F
73C6 P09F
7696 P5CF

U15

UAA9
CU3U P3H0
73C6 P6U0
7696 7573
7053
5F8H
C9F8

TIMING CIRCUIT CHECK

U10

"1"
2MHz
200KHz

U11

8MHz
15.8 MHz
8MHz
8MHz

U12

15.8 MHz
0V
1MHz
"1" (0 IF S1 CLOSED)
8MHz
4MHz
2MHz
1MHz

U13

15,824 MHz

DECODER CHECK

FROM A3A6 SHEET 2/2 +5V=4596

CHECK TP1 UAAP.
REPLACE A3A6E1.
PROCEED TO A3A6 SHEET 3/3.
(U6-8).

U18

2P91
0282 81C5
8660 4404
2H34 3AC0
5CF2 7909
4596 P1A6
H736 F66P
9406

U19

2P91
0282 5605
8660 60FU
0000 801A
5CF2 8PC3
2H34 F802
UAA9 4596
C3UA

H2H0 9-12 ← QUALIFIER CHECK

4404 18-14
81C5 18-15
7909 18-12
3AC0 18-13
H736 18-7
P1A6 18-11
8PC3 19-12
F802 19-11
60FU 19-14
5605 19-15

QUALIFIER CHECK

+5V=P545

CHECK P1-16 (H2H0)

U20

73UF P545
4333 6365
8UCH AUP8
9U27 CU71
73UF
H2H0 4302
5F8H H7PC
0000 P85A

U21

73UF P545
46F2 85H1
73UF P545
6365 1HP0
0000
H2H0 4302
C9F8 H7PC
0000 P85A

GROUND TP6.
VERIFY U20-6,HAF6 (U21 BAD).
* IF U20 AND U21 APPEAR BAD, MOMENTARILY GROUND P1-33 WHILE PROBING U20-6.
9352=U14 IS OK.

SPECIAL INSTRUCTIONS OR TROUBLESHOOTING INFORMATION

1 19 P1 18 36

1 19 P2 18 36

A E B C D

PRINTED CIRCUIT BOARD EDGE CONNECTOR. OVALS INDICATE CONNECTING FINGERS ON COMPONENT SIDE OF BOARD. LINES INDICATE FINGERS ON CIRCUIT SIDE.

SIGNATURE ANALYSIS TROUBLESHOOTING DIAGRAMS

THE SIGNATURE ANALYSIS TROUBLESHOOTING DIAGRAMS ARE PRINTED IN THREE COLORS WITH EACH COLOR HAVING A PARTICULAR SIGNIFICANCE. IN GENERAL, BLACK IS USED FOR GENERAL INFORMATION SUCH AS TEST TITLES AND EQUIPMENT CONNECTIONS, GREEN IS USED TO SHOW THE MAIN VERIFICATION PATH, AND RED IS USED FOR INSTRUCTIONS AND PATHS TO FOLLOW WHEN A BAD SIGNATURE HAS BEEN LOCATED ON THE MAIN VERIFICATION PATH. A MORE DETAILED DESCRIPTION FOLLOWS:

BLACK

PAD	IC OUTPUT PIN
DIAMOND	IC OPEN COLLECTOR (3-STATE) OUTPUT PIN
LINE	INDICATES PHYSICAL CONNECTION BETWEEN IC PINS; ALSO, INDICATES BORDER BETWEEN TESTS
LETTERING	GENERAL INFORMATION AND INSTRUCTIONS FOR THE TEST
ASTERISK	UNSTABLE OR UNRELIBLE SIGNATURE

GREEN

LINE	MAIN VERIFICATION PATH
LETTERING	INFORMATION AND INSTRUCTIONS FOR MAIN VERIFICATION PATH

RED

PAD	IC INPUT PIN
LINE	USED BETWEEN INPUT AND OUTPUT OF IC TO INDICATE THAT INPUT EFFECTS ONLY THE OUTPUT TO WHICH THE RED LINE IS CONNECTED; USED BETWEEN ICS TO INDICATE PATH TO FOLLOW WHEN A BAD SIGNATURE HAS BEEN LOCATED
LETTERING	TROUBLESHOOTING INFORMATION AND INSTRUCTIONS TO FOLLOW WHEN BAD SIGNATURE HAS BEEN LOCATED

FIGURE 1. SIGNATURE ANALYSIS TROUBLESHOOTING DIAGRAM FORMAT

TABLE 1. A3 DIGITAL STORAGE MNEMONIC TABLE

Mnemonic	Description	Mnemonic	Description
18.4MHZ LO	18.4 MHz Local Oscillator Signal	LDRMP	Load Ramp Register
1MHZ	1 MHz ADC Clock	LDSR	LOW = Digital Storage Ready
21.4MHZ	21.4 MHz IF Signal	LDX	Load X Position Register
3MHZ	3 MHz IF Signal	LDY	Load Y Position Register
A LOG	Log Expand Control	LFSEN	LOW = Fast Sweep Enable
AØ – A11	Accumulator Bus Bits Ø through 11	LG1Ø	Linear Gain Controls
A1ØdB	Attenuation Controls	LG2Ø	
A2ØdB		LGCLK	200 kHz Line Generator Clock
A2dB		LGX	Line Generator Horizontal Signal
A4dB		LGY	Line Generator Vertical Signal
A8dB		LINCRSA	Increment Stroke Address
ADRØ	Instrument Bus Address Bits Ø through 3	LINTG	LOW = Integrator Control
ADR3		LL	Long Line
AUX BLANK	Auxiliary Blanking Output	LLGBLANK	LOW = Line Generator Blanking Control
AUX Z	Auxiliary Z Axis Output	LLL	LOW = Long Line
AVdB	Attenuation Control	LMEMEN	LOW = Enable Memory Output
B LOG	Log Expand Control	LOG/LIN	Log/Linear Control
BØ – B11	Digital Storage Bus Data Bits Ø through 11	LQ	LOW = Selected Qualifier
BLØ – BL6	Branch Length Bus Bits Ø through 6	LROMEN	LOW = ROM Enable
BLINK	Blink CRT Display Control	LRSTO	LOW = Reset Trigger Occurred
BRIGHT	Bright CRT Display Control	LRTN	LOW = Enable Interrupt Return
BS	Block Switch Control	LRTRC	LOW = Retrace Signal
BW5	Bandwidth Controls	LTIO	LOW = IF-Display Section I/O Strobe
BW63		LTON	LOW = Turn On
BW68		LTSTA	LOW = Input Test A Data
BW7		LTSTB	LOW = Input Test B Data
CE	Memory Chip Enable	LWRITE	Memory Write Control
CHAR	Character Mode Display Control	LZERO	Output of Zero Check on ALU Result
CLK	8 MHz System Clock	MAØ – MA11	Memory Address Bus Bits Ø through 11
CRT DSBL	CRT Disable Control	NSØ – NS7	Next State Bus Bits Ø through 7
ΔX	Delta X Position	OS1Ø	Offset Gain Controls
ΔY	Delta Y Position	OS2Ø-1	
DIM	Dim CRT Display Control	OS2Ø-2	
DOTEN	Dot Enable	PENLIFT	Recorder PENLIFT Control
FØ – F11	Function Bus Bits Ø through 11	POS	Sign of ALU Results
FCØ – FC3	Data Manipulator Function Control Bits Ø thru 3	PSØ – PS3	I/O Port Selection Bits Ø through 3
FREQ ZERO	Frequency Zero Control	QSØ – QS3	Qualifier Selection Bits Ø through 3
FS	Fast Sweep Mode	RØ – R11	Ram Bus Bits Ø through 11
FSOUT	Fast Sweep Output	RBWA	Resolution Bandwidth Controls
FSZ	Fast Sweep Z Axis	RBWB	
HLDX	Hold X Position (Sample and Hold Control)	RBWC	
HLDY	Hold Y Position (Sample and Hold Control)	RBWD	
HOLD	Track and Hold Control	REC CAL	Recorder Calibrate
HSWP	HIGH = Sweeping	REC ZERO	Recorder Zero
ICLK	Indicator Clock (Front-Panel LEDs)	RMØ – RM2	Ram Register Select Bits Ø through 2
INSELA	Input Selection Bit A	RSEN	Reset Peak Detectors Enable
INSELB	Input Selection Bit B	RSHS	Reset High Sweep
INTG	Integrator Control	SØ – S11	Source Bus Bits Ø through 11
INTR	Interrupt	SØ – S7	State Bus Bits Ø through 7
IOBØ	Instrument Bus Data Bits Ø through 15	SG1Ø	Step Gain Controls
IOB15		SG2Ø-1	
IOC	I/O Port Input/Output Control	SG2Ø-2	
KSØ – KS3	Constant Selection Bits Ø through 3	SMPL	Sample
LØ – L7	Link State Bus Bits Ø through 7	STROK8	Stroke 8 of Current Character
LADC	LOW = Enable ADC Output	SWITCH	Up/Down Converter Control
LBLANK	LOW = Blanking Control	VBWA	Video Bandwidth Controls
LCLK	Inverted CLK	VBWB	
LCLRSA	LOW = Clear Stroke Address	VBWC	
LDCHAR	Load Character Register	VBWD	
LDEXP	Load Expand Register	VIDEO	Video Signal
LDM EN	Data Manipulator Output Enable	X	Horizontal Signal to CRT
LDMAR	Load Memory Address Register	Y	Vertical Signal to CRT
LDMDR	Load Memory Data Register	Z	Intensity Signal to CRT

TABLE 2. 50-WIRE INSTRUMENT BUS PIN CONNECTION TABLE FOR IF-DISPLAY SECTION

Pin	Signal	Description
1	GND	Ground
2	NC	No Connection
3	IOBØ	Instrument Bus Data Bits Ø – 15
4	IOB1	
5	IOB2	
6	IOB3	
7	IOB4	
8	IOB5	
9	IOB6	
10	IOB7	
11	IOB8	
12	IOB9	
13	IOB10	
14	IOB11	
15	IOB12	
16	IOB13	
17	IOB14	
18	IOB15	
19	NC	No Connection
20	NC	No Connection
21	NC	No Connection
22	HPON	HIGH = IF-Display Section Power ON
23	ADRØ	Instrument Bus Address Bits Ø – 4
24	ADR1	
25	ADR2	
26	ADR3	
27	ADR4	
28	ADR5	Address Bit 5 not used
29	NC	No Connection
30	NC	No Connection
31	KR8	Key Rows 8 – 11
32	KR9	
33	KR10	
34	KR11	
35	KCØ	Key Columns Ø – 7
36	KC1	
37	KC2	
38	KC3	
39	KC4	
40	KC5	
41	KC6	
42	KC7	
43	LSTP	LOW = Stop Processor
44	HSWP	HIGH = Sweeping
45	LSRQ	LOW = Service Request
46	LDSR	LOW = Digital Storage Ready
47	LBIO	LOW = RF Section I/O Strobe
48	GND	Ground
49	LTIO	LOW = IF-Display Section I/O Strobe
50	GND	Ground

RF SECTION

IF-DISPLAY SECTION

VIDEO INPUT/OUTPUT
- VIDEO IN — J15 — 96 — W36 — VIDEO TO A3A9 TRACK AND HOLD
- W38 (1)
- VIDEO OUT — J14 — 7 — W35

IF INPUT/OUTPUT
- IF INP — J13 — 89 — W33
- W37 (1)
- IF OUT — J12 — 87 — W34

RECORDER OUTPUTS
- PENLIFT — 14 — W25 — PENLIFT (FROM A3A1)
- VIDEO — 1 — W13
- SWEEP — 3 — W14
- 21.4 MHz IF OUTPUT — 2 — W15

21.4 MHz IF

J1-1 — W30 — J1-1 — 97 — W19

A4A8 ATTENUATOR BANDWIDTH FILTER
- <-5 dBm>
- 50
- -20→0dB Δ=10dB
- LC POLES (2)
- XTAL POLES (2)
- <+5 dBm; OR <-15dBm;

A4A6A2 DOWN CONVERTER
- 50
- <+1 dBm>
- RES BW > 1KHz
- RES BW ≤ 1KHz
- 3 MHz
- 18.4 MHz
- <-15dBm>

A4A7 3 MHz BANDWIDTH FILTER
- 5 POLES
- <+4 dBm>

A4A6A1 UP CONVERTER
- 50
- RES BW > 1KHz
- RES BW ≤ 1KHz
- 18.4 MHz
- 21.4 MHz — 1 POLE
- <+5 dBm>

A4A5 STEP GAIN
- 0→50 dB Δ=10dB
- -15.9→0dB Δ=0.1dB
- <-3dBm>
- 18.4 MHz
- FREQ ZERO (FROM A1A1)
- STEP GAIN CONTROL

ATTENUATION CONTROL /2 /3

J1-5 — W18 — 6 — IF OUTPUT TO FREQUENCY COUNTER

J1-4 — W17 — 53 — AUX SWEEP 0 TO 10 VOLTS

J1-3 — W16 — 0 — SWEEP INPUT 0 TO 10 VOLTS

BANDWIDTH CONTROL /4

21.4 MHz IF

SWEEP

DISPLAY OUTPUTS
- X — 83 — W28 — AUX X (FROM A1A4)
- Y — 81 — W29 — AUX Y (FROM A1A5)
- Z — 82 — W27 — AUX Z (FROM A3A2)
- BLANK — 86 — W32 — AUX BLANK (FROM A3A2)

A4A9 IF CONTROL
- /9
- /10
- BANDWIDTH CONTROL
- A0.0-A15.9dB CONTROL
- IF GAIN CONTROL
- INPUT LATCHES
- ADDRESS DECODER
- 108Ø-15 ADRØ-4 LTIØ
- /22

LINE IN — /3

LINE MODULE TRANSFORMER

A1A9 BUS TRANSITION
- FAN RELAY
- FAN

EXTERNAL TRIGGER INPUT — 85 — W26

50-WIRE INSTRUMENT BUS TO A1E CONTROLLER — W31 — /50 — J2 — 50-WIRE INSTRUMENT BUS

HPON — W8

9 TRANSFORMER SECONDARIES

EXTERNAL TR

NOTE

1. UNLESS OTHERWISE INDICATED, POWER LEVELS ARE MEASURED UNDER THE FOLLOWING CONDITIONS USING AN ACTIVE PROBE AND THE SPECTRUM ANALYZER.

INSTRUMENT PRESET	CAL. OUT FREQ.
CENTER FREQUENCY	0 Hz
FREQUENCY SPAN	0 dB
ATTENUATION	0 dB
RESOLUTION BANDWIDTH	3 KHz

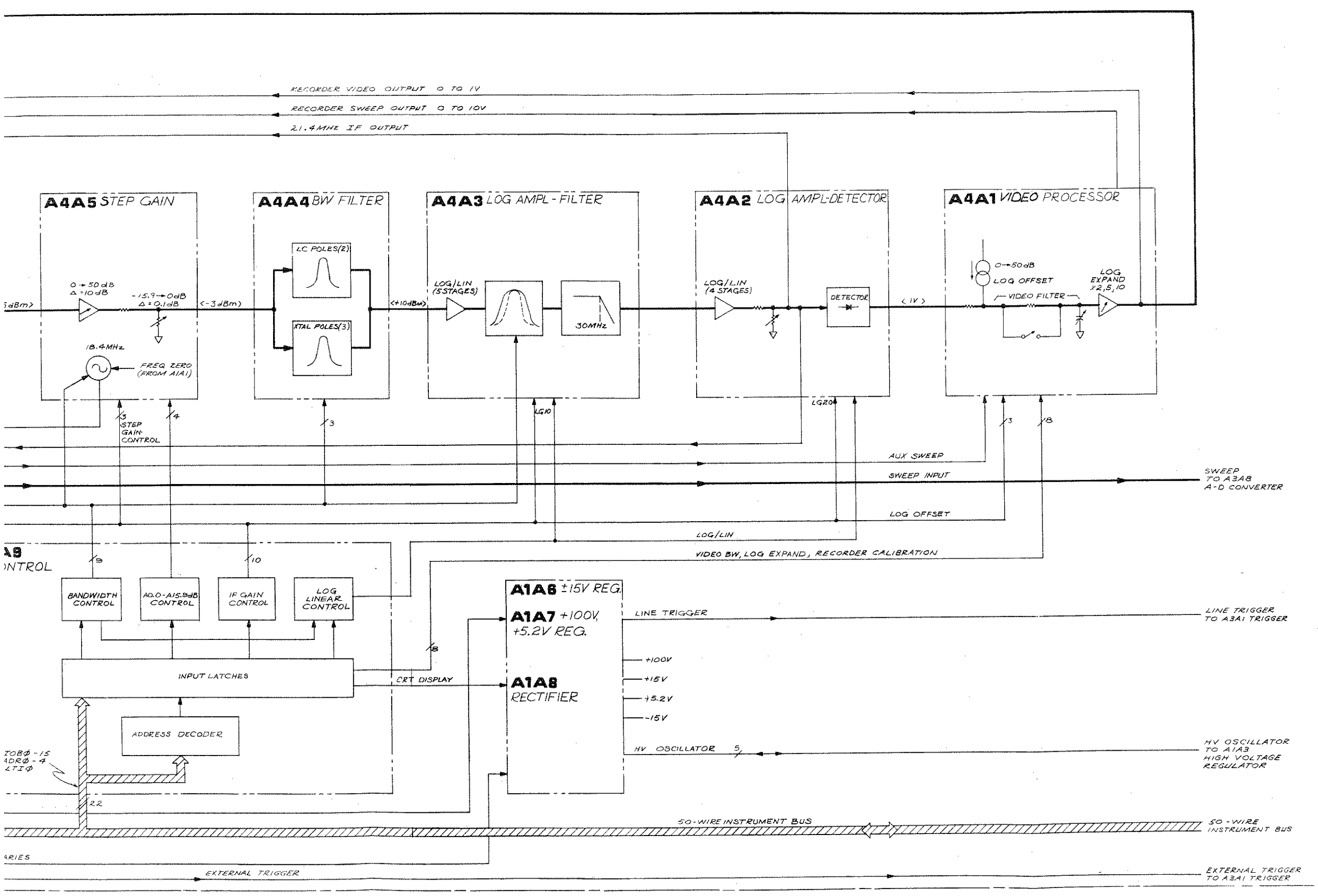

FIGURE 1. IF-DISPLAY OVERALL BLOCK DIAGRAM (1 OF 2)

IF DISPLAY SECTION

W11 VIDEO

A3A9 TRACK AND HOLD

POS PEAK DETECTOR

NEG PEAK DETECTOR

POS PEAK

NEG PEAK

SAMPLE

HOLD

TRACK

HOLD (FROM A3A6)

INPUT SELECT (FROM A3A6)

A3A8 A-D CONVERTER

ADC

RAMP CONVERTER

COMPARATOR

DAC

A3A4 MEMORY

CHARACTER STROKE MEMORY (2K x 8)

RAM (4K x 12)

BUFFER

MEMORY DATA REGISTER

MEMORY ADDRESS REGISTER

A3A3 LINE GENERATOR

Y REGISTER

Y DAC

Y SAMPLE AND HOLD

Y INTEGRATOR

EXPAND REGISTER

REFERENCE

X REGISTER

X DAC

X SAMPLE AND HOLD

X INTEGRATOR

VIDEO FROM BACK PANEL A4A1 VIDEO PROCESSOR

SWEEP FROM RF SECTION

WRITE CONTROL

4 CONSTANT SELECTION

CHIP ENABLE

ROM ENABLE

CONSTANT SELECTION

DIGITAL STORAGE BUS (B0-B11)

FROM SHEET 1

LINE TRIGGER FROM A1A8 RECTIFIER

HV OSCILLATOR FROM A1A6 115V REGULATOR

50-WIRE INSTRUMENT BUS

EXTERNAL TRIGGER FROM REAR PANEL

A3A6 MAIN CONTROL

TEST ROM

STATE REGISTER

PROGRAM ROM (512-WORD x32BIT)

PIPELINE REGISTER

ADRESSABLE FLIP-FLOPS

RAM CE GENERATOR

HOLD (TO A3A8 AND A3A9)

INPUT SELECT (TO A3A9)

INTENSITY CONTROL (TO A3A2)

LINK REGISTER

BRANCH LENGTH ADDER

PIPELINE REGISTER

CONTROL PULSES

DUAL TIMER

I/O SELECTION

QUALIFIER SELECTION

TO A3A7

RAM REGISTER SELECTION, FUNCTION SELECTION

STATE MACHINE CONTROL

BLOCK SWITCH CONTROL

LINE TRIGGER

A3A5 DATA MANIPULATOR

MULTIPLEXER BUS DRIVER

BUFFER

CONSTANT ROM

ACCUMULATOR

REGISTER RAM

ALU

A3A7 INTERFACE

DATA TRANSFER REGISTER

DIGITAL STORAGE BUS DRIVER

TRANSFER BUS

BUS DRIVERS

ADDRESS DECODER

ADRØ-4
IOBØ-11
LTIO

50-WIRE INSTRUMENT BUS

EXT TRIGGER

HV OSCILLATOR

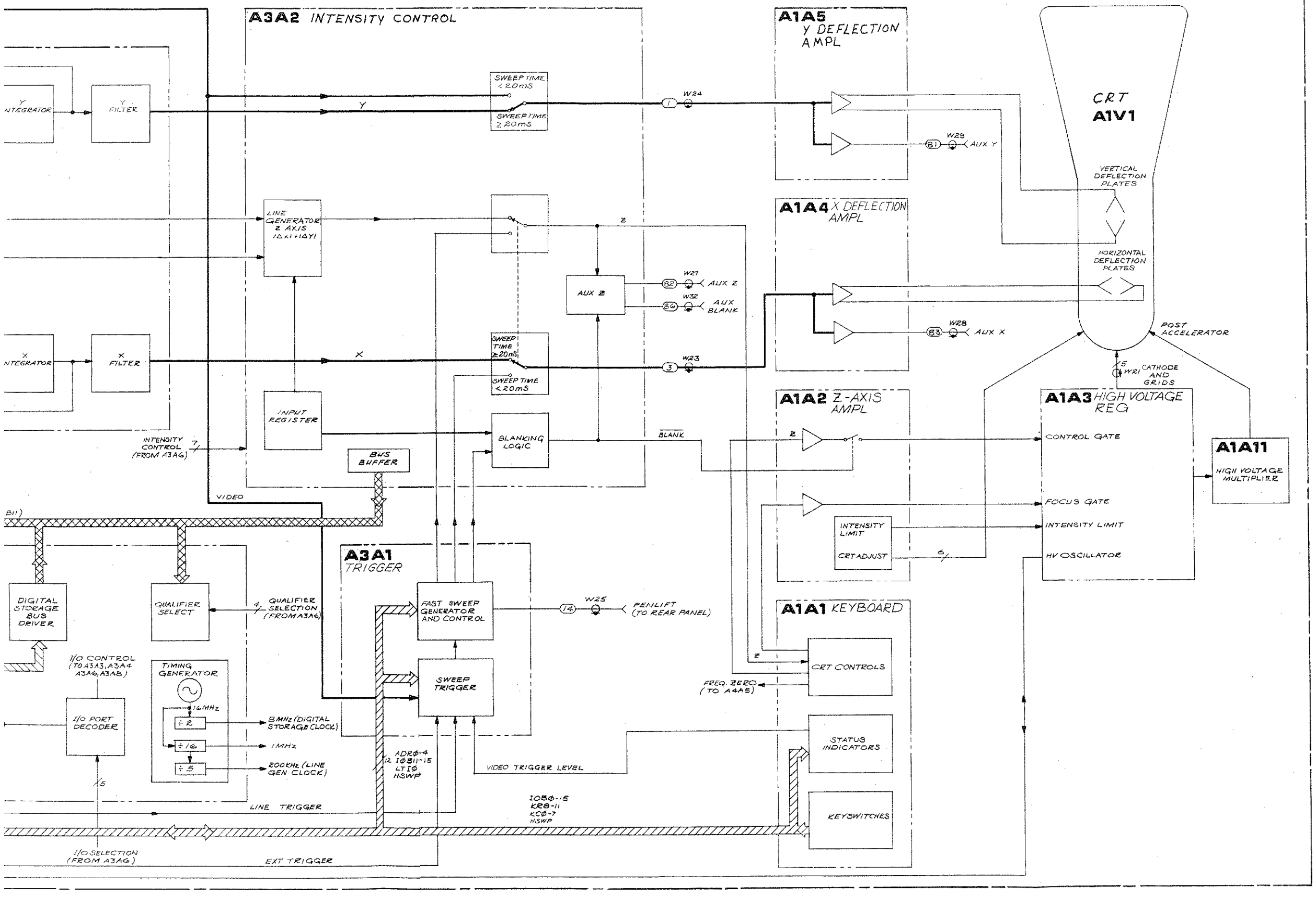

NOTE

UNLESS OTHERWISE INDICATED, POWER LEVELS ARE MEASURED UNDER THE FOLLOWING CONDITIONS USING AN ACTIVE PROBE AND THE SPECTRUM ANALYZER:

INSTRUMENT PRESET

CENTER FREQUENCY	20 MHz
FREQUENCY SPAN	0 Hz
ATTENUATION	0 dB
RESOLUTION BANDWIDTH	3 KHz

FIGURE 1. IF-DISPLAY OVERALL BLOCK DIAGRAM (2 OF 2)

DISPLAY TROUBLESHOOTING

The Display system consists of four sections:

- Input section: A3A8 Analog-Digital Converter and A3A9 Track and Hold.
- Processor section: A3A4 Memory, A3A5 Data Manipulator, A3A6 Main Control, and A3A7 Interface.
- CRT Driver section: A3A1 Trigger, A3A2 Intensity Control, and A3A3 Line Generator.
- CRT Amplifier section: A1A2 Z Axis Amplifier, A1A4/A5 X/Y Deflection Amplifier, and A1A3 HV Regulator.

Isolation of a malfunction to one of the above sections is done with the use of rear-panel display outputs and the internal test programs.

If the left INSTR CHECK LED is on, a failure has probably occurred in Digital Storage. Refer to the A3 Digital Storage Troubleshooting notes for the correct troubleshooting procedure.

The following paragraphs briefly describe the failure modes and appropriate places to begin the troubleshooting.

Characters Only

If only the characters on the CRT display are affected, the problem most likely exists on the A3A4 Memory. Perform the character ROM check on the SA Diagram.

Graticule and Characters Only

If the graticule and characters are incorrect, but the video information appears to be correct, suspect the System ROMs on A3A6 first. Also the "long POP" test of the RF Section memory should be performed. Refer to the Digital Storage Troubleshooting notes for more information.

Video (Signal) Only

If only the video information is incorrect, suspect A4 IF Section, A3A8, or A3A9. To eliminate the IF, connect the rear-panel SWEEP and VIDEO RECORDER OUTPUTS to an oscilloscope. If the video is correct, then either A3A8 or A3A9 is defective.

Remove cable 0 from A3A9J1. Then jumper A3A8TP1 to A3A9TP3 and push Instrument Preset. This substitutes the sweep ramp for the video input. The CRT display is similar to Figure 7 in the A3A8 tab. If the ramp is incorrect, remove A3A9, jumper A3A8TP1 to A3A8TP6 and push Instrument Preset. The CRT display is the same as Figure 7 in the A3A8 tab. If the display is correct, the problem is in the A3A9 assembly. Refer to A3A9 Troubleshooting procedure. If ramp is incorrect, suspect ADC on A3A8. See the A3A8 Troubleshooting notes to verify this.

Don't rule out the sweep system, especially the ramp converter on A3A8, when troubleshooting video failures. Some ramp converter failures produce CRT displays that are similar to those caused by ADC failures.

All CRT Information Blank or Distorted

Check X, Y, and Z DISPLAY OUTPUTS on rear panel. If these are correct, the fault is most likely with the X/Y Deflection Amplifiers or Z Axis Amplifier. The following program, which places a dot at the center of the display, is helpful when troubleshooting the Deflection Amplifiers. It balances the voltages in both halves of the circuitry. Press Instrument Preset and key in the following:

Blank Trace A
SHIFT Recorder Lower Left ..... DSPL ADRS
0 Hz
SHIFT Recorder Upper Right ..... WRITE:
1090 Hz ..... Vector Command
512 Hz, 512 Hz ..... X, Y coordinates for center screen
1092 Hz ..... End of display

If the X, Y, and Z DISPLAY OUTPUTS produce either distorted or no output, Digital Storage must be tested. Connect a jumper from A3A6TP3 to A3A6TP6 and push A3A7S1. The Digital Storage Test Pattern (Figure 1 of the A3 Digital Storage Troubleshooting tab) results. Refer to the Digital Storage Troubleshooting procedures. If the test pattern is correct, start with the system ROMs check.

If the test pattern is incorrect, verify operation of A3A3 Line Generator and A3A2 Intensity Control. Refer to the troubleshooting information included with the schematics. If A3A3 and A3A2 are working properly, then all of Digital Storage will have to be checked, starting with A3A6.

Whenever the display is blank, and the left INSTR CHECK LED is off, check the A1A6 ±15V Regulator and A1A7 +100V, +5.2V Regulator. The power supply LEDs indicate the presence of voltage but not regulation. Verify operation of A3A2 Intensity Control and A1A2 Z Axis Amplifier. If these are all working properly, carefully examine the A1A3 High Voltage Regulator assembly.

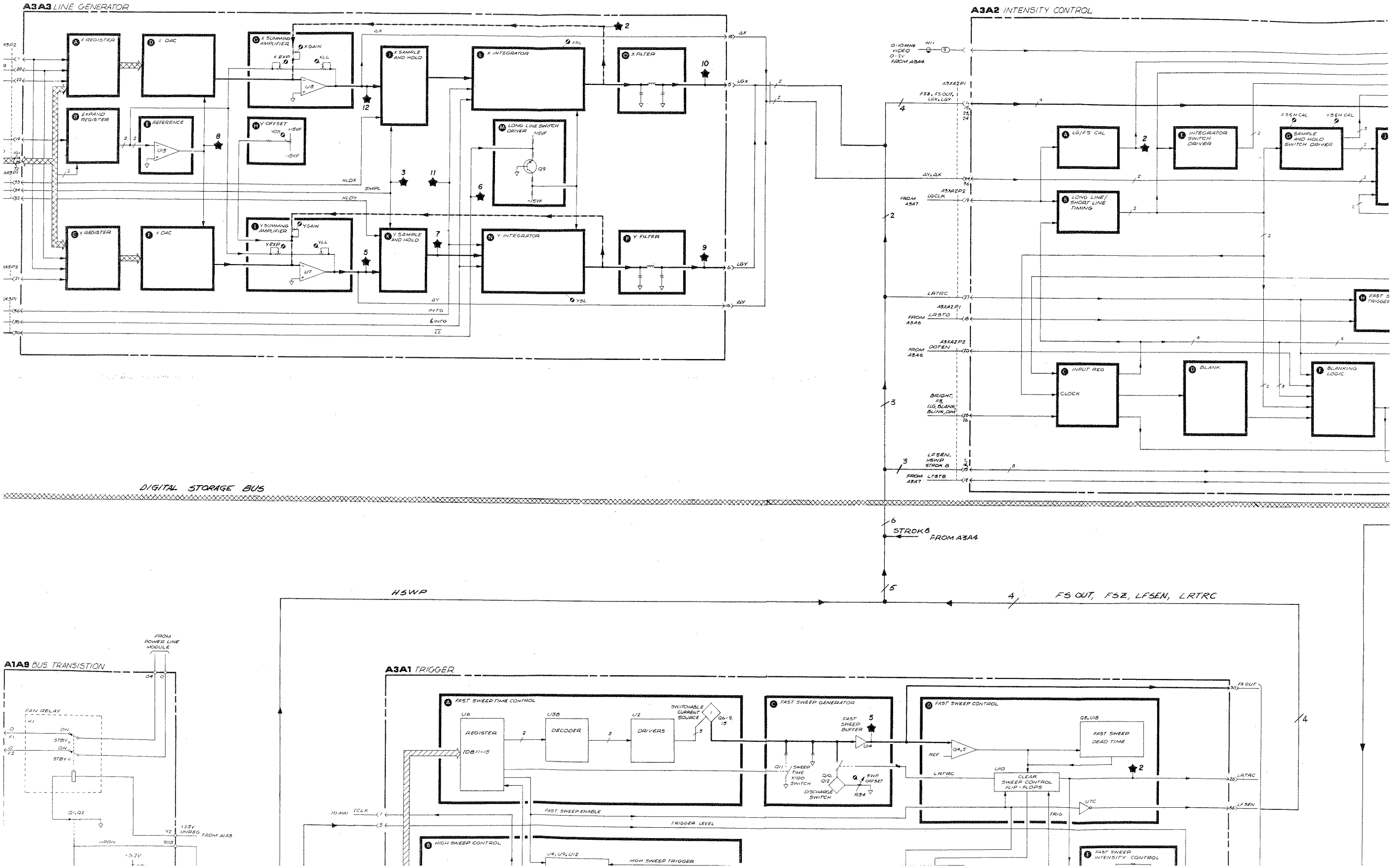
A3A3 LINE GENERATOR
A3A2 INTENSITY CONTROL
DIGITAL STORAGE BUS
A1A8 BUS TRANSISTION
A3A1 TRIGGER
HSWP
FS OUT, FSZ, LFSEN, LRTRC
STROK8
FROM A3A4
FAST SWEEP TIME CONTROL
FAST SWEEP GENERATOR
FAST SWEEP CONTROL
FAST SWEEP DEAD TIME
CLEAR SWEEP CONTROL FLIP-FLOPS
HIGH SWEEP CONTROL
FAST SWEEP INTENSITY CONTROL
FAST SWEEP ENABLE
TRIGGER LEVEL
HIGH SWEEP TRIGGER
FAN RELAY
FROM POWER LINE MODULE

A1A3 HIGH VOLTAGE REGULATOR

A1A2 Z AXIS AMPLIFIER

A1A5 Y DEFLECTION AMPLIFIER

A1A4 X DEFLECTION AMPLIFIER

VIDEO

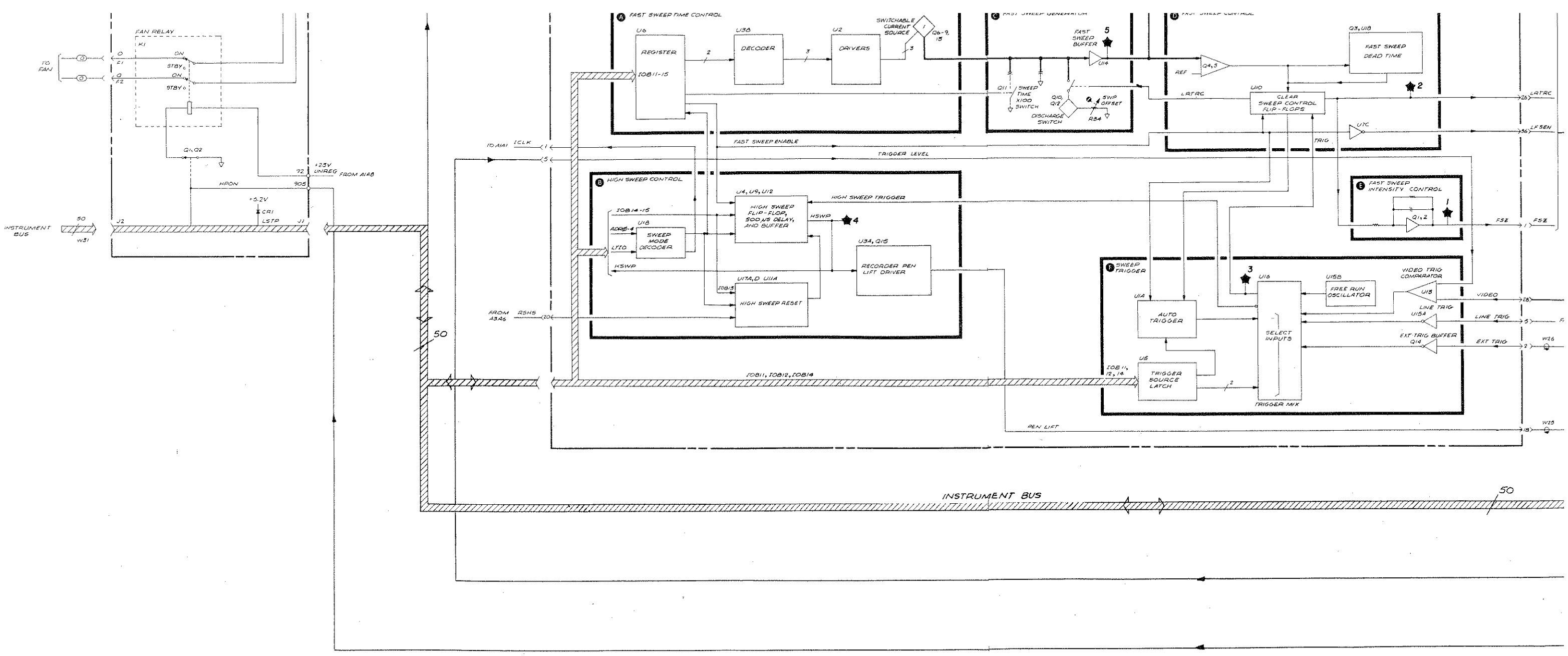
FAN RELAY
K1
TO FAN
ON
STBY
Q1,Q2
+23V UNREG
FROM A1A8
HPON
+5.2V
CR1
LSTP
INSTRUMENT BUS
W31
J2
J1
A FAST SWEEP TIME CONTROL
U6
REGISTER
IOB11-15
U30
DECODER
U2
DRIVERS
SWITCHABLE CURRENT SOURCE
Q6-9, 15
C FAST SWEEP GENERATOR
FAST SWEEP BUFFER
U14
Q11
SWEEP TIME X100 SWITCH
Q10, Q12
DISCHARGE SWITCH
SWP OFFSET
R84
D FAST SWEEP CONTROL
Q3, U18
FAST SWEEP DEAD TIME
REF
Q4,5
LATRC
U10
CLEAR SWEEP CONTROL FLIP-FLOPS
U17C
LFSEN
TRIG
FAST SWEEP ENABLE
TRIGGER LEVEL
ID A1A1
ICLK
B HIGH SWEEP CONTROL
U4, U9, U12
HIGH SWEEP FLIP-FLOP, 500 µS DELAY, AND BUFFER
HIGH SWEEP TRIGGER
HSWP
IOB14-15
ADRS0-4
U18
SWEEP MODE DECODER
LTIO
U34, Q15
RECORDER PEN LIFT DRIVER
U17A,D U11A
IOB13
HIGH SWEEP RESET
FROM A3A6
RSH5
E FAST SWEEP INTENSITY CONTROL
Q1,2
FSZ
F SWEEP TRIGGER
U16
U15B
FREE RUN OSCILLATOR
VIDEO TRIG COMPARATOR
U13
VIDEO
LINE TRIG
U15A
EXT TRIG BUFFER Q14
EXT TRIG
U11A
AUTO TRIGGER
SELECT INPUTS
TRIGGER MIX
U5
TRIGGER SOURCE LATCH
IOB11, 12, 14
IOB11, IOB12, IOB14
PEN LIFT
INSTRUMENT BUS
50

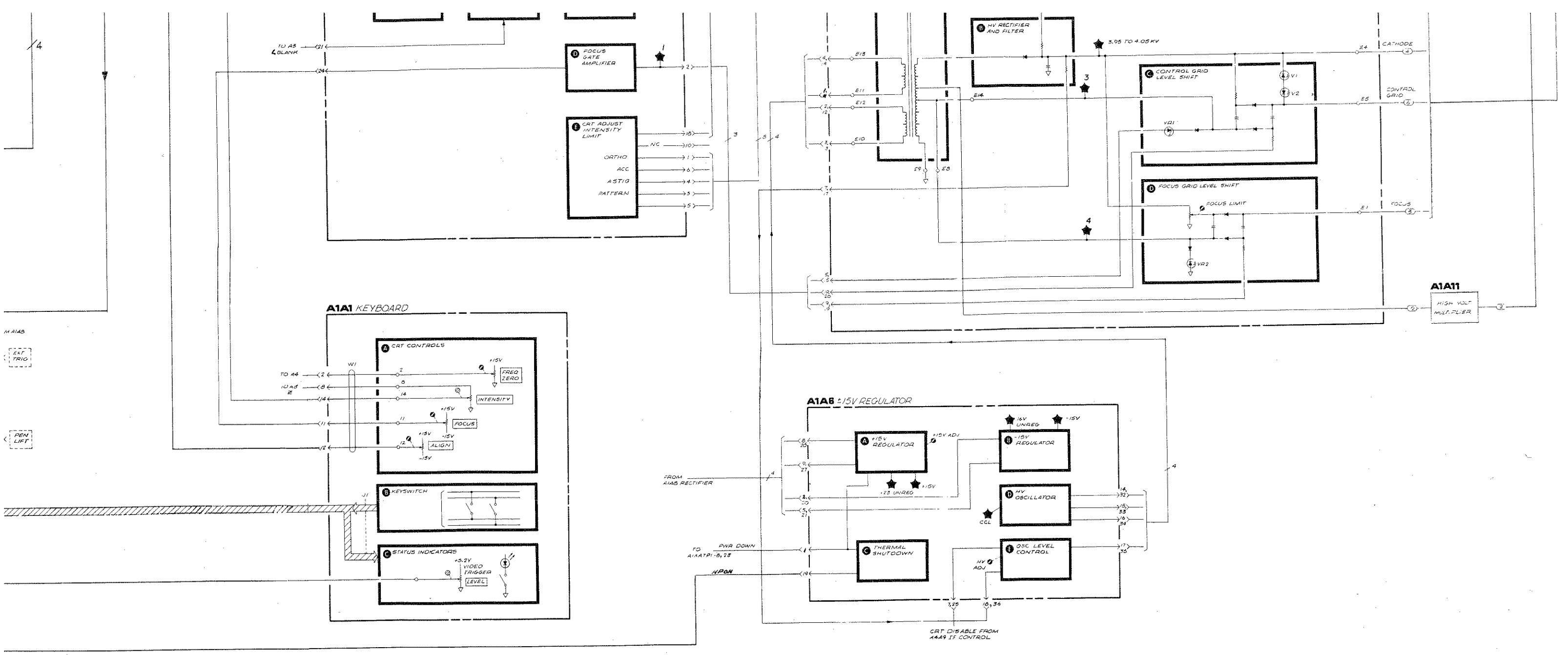

A1

FIGURE 1. A1 DISPLAY SECTION BLOCK DIAGRAM

A1A1 KEYBOARD, CIRCUIT DESCRIPTION

A1A1 Keyboard consists of three functional blocks: CRT Controls, Keyboard Switches, and Status Indicators.

CRT Controls (A)

The CRT Controls include the following front-panel potentiometers:

- INTENSITY control R1. Sets the level of the input to A1A2 Z Axis Amplifier.
- ALIGN screwdriver adjustment R8. Sets the CRT trace to horizontal.
- FOCUS screwdriver adjustment R2. Focuses the CRT trace.
- FREQ ZERO screwdriver adjustment R3. For resolution bandwidths of 1 kHz or less, adjusts the frequency of the 18.4 MHz oscillator (A4A5 Step Gain) to precisely align the IF passband to 21.400 MHz.

The front-panel STANDBY indicator, LED DS16, which is driven by the PWR DWN signal from A1A6 ±15V Regulator, is activated when line power is applied while the power supply regulators are off.

Keyboard Switches (B)

The Keyboard Switches are a matrix of rows and columns connected to the RF Section keyboard by the 50-wire Instrument Bus W8. When a keyboard switch is activated, A15 Controller recognizes the switch and performs the indicated operation.

Status Indicators (C)

The Status Indicators, LEDs DS1 through DS17, show the states of the various keyboard functions. A15 Controller loads the latches U1 and U2 via the Instrument Bus W8. The latch address is decoded in A3A1 Trigger, which generates the ICLK strobe signal.

A1A2 Z AXIS AMPLIFIER, CIRCUIT DESCRIPTION

A1A2 Z Axis Amplifier receives from A3A2 Intensity Control two signals for control of the CRT: a 0V – 2V Z signal proportional to the CRT writing rate, and a blanking signal LBLANK.

Amplifier (A)

The Z signal, after attenuation by the front-panel INTENSITY potentiometer A1R1, drives the input stage Q9, Q10. This amplifier supplies a differential current output to the Focus Gate Amplifier and, through a Blanking Switch, to the Control Gate Amplifier.

Blanking Switch (B)
Control Gate Amplifier (C)

The input to the Control Gate Amplifier is a virtual-ground, current-summing junction. Its output voltage is given by:

$$V \approx I_{Q7} R25$$

where I_{Q7} is the current in Q7, which is determined by the Z-axis input when LBLANK is high. When LBLANK is low, Q7 is off, and the output of the Control Gate Amplifier drops to a few volts, blanking the CRT.

Focus Gate Amplifier (D)

The Focus Gate Amplifier supplies a correction voltage to the FOCUS grid of the CRT to compensate for defocusing effects with varying intensity levels. The magnitude of this correction voltage is set by FOCUS GAIN potentiometer R30 and the front-panel FOCUS screwdriver adjustment A1R2. The output stage is identical to that of the Control Gate Amplifier except for the pulse response adjustments (HF GAIN potentiometer R22 and HF TRIM capacitor C10 in the Control Gate Amplifier). These components are fixed in the Focus Gate Amplifier.

CRT Adjustments (E)

The CRT Adjustments set the bias voltage for the various CRT functions. Each adjustment name is indicated on the schematic.

FRONT-PANEL LED REPLACEMENT

1. Set instrument LINE switch to STANDBY.

2. Loosen set screws in INTENSITY control and Video Trigger LEVEL control knobs ❶ and ❷ using a No. 2 allen wrench (HP Part Number 8710-0892) and remove knobs.

FRONT PANEL VIEW

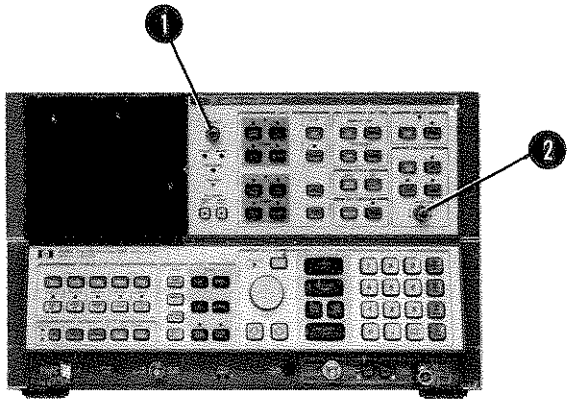

3. Remove nut from INTENSITY control and from Video Trigger LEVEL control using a 5/16-inch wrench.

4. Front panel is now loose. It may be necessary to pry front panel out slightly using a sharp instrument such as a knife blade along the edge of the panel.

5. Front-panel LEDs are now accessible for replacement. Unsolder leads from rear of printed circuit board. Pull out LED and LED standoff with fingers. Insert new LED in standoff, then mount on board with negative (cathode) lead to square pad on printed circuit board. Refer to illustration on next page for idenification of LED leads.

FIGURE 1. FRONT-PANEL LED REPLACEMENT (1 OF 2)

FRONT-PANEL LED REPLACEMENT (Cont'd)

6. The RECORDER pushbutton LEDs (3), LOWER LEFT and UPPER RIGHT cannot be replaced as described in Step 5. To replace these LEDs, it is necessary to remove the pushbutton keys and the A1A1 Keyboard:

   a. Remove key housing the defective LED by prying the key outward using a pointed instrument such as a soldering aid.

   b. Remove sub-panel and A1A1 Keyboard by removing the screws (4) from the perimeter and prying forward if necessary with a pointed instrument.

   c. Unsolder the defective LED from the rear of the A1A1 Keyboard.

   d. Loosen the leads from the printed circuit board using a soldering aid and push on the leads to force LED out of switch through the front of the panel.

   e. Insert new LED through the switch from the front of the panel so that leads extend through the printed circuit board at the rear of the Keyboard. Negative (cathode) lead goes to square pad on printed circuit board.

   f. Pull leads of LED with fingers or needle-nose pliers to ensure that LED is far enough inside of the switch to allow the key to be reinstalled.

   g. Solder LED leads to printed circuit board, trim excess lead length, and reassemble front panel.

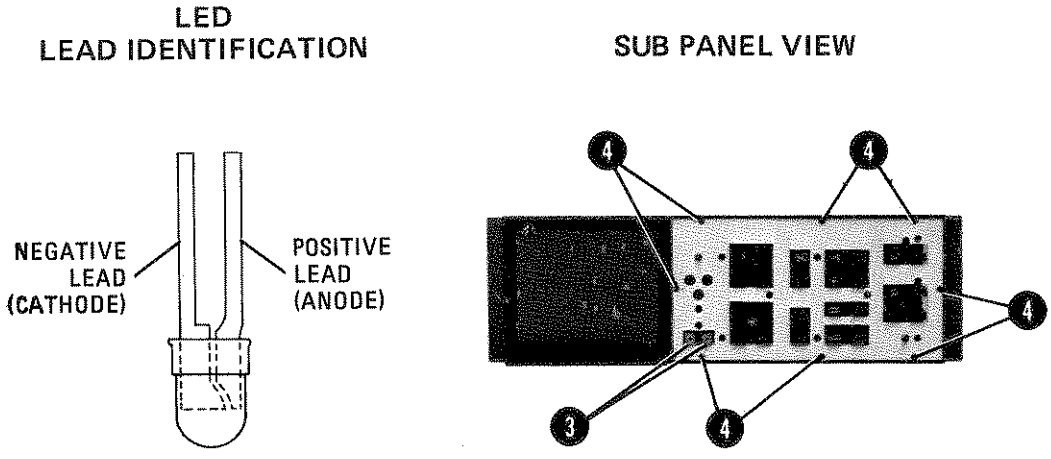

FIGURE 1. FRONT-PANEL LED REPLACEMENT (2 OF 2)

FRONT PANEL REMOVAL AND REPAIR

1. Remove adhesive trim strip ❶ from both sides of instrument.

2. Remove two screws ❷ located under trim strip ❶ as shown in View A.

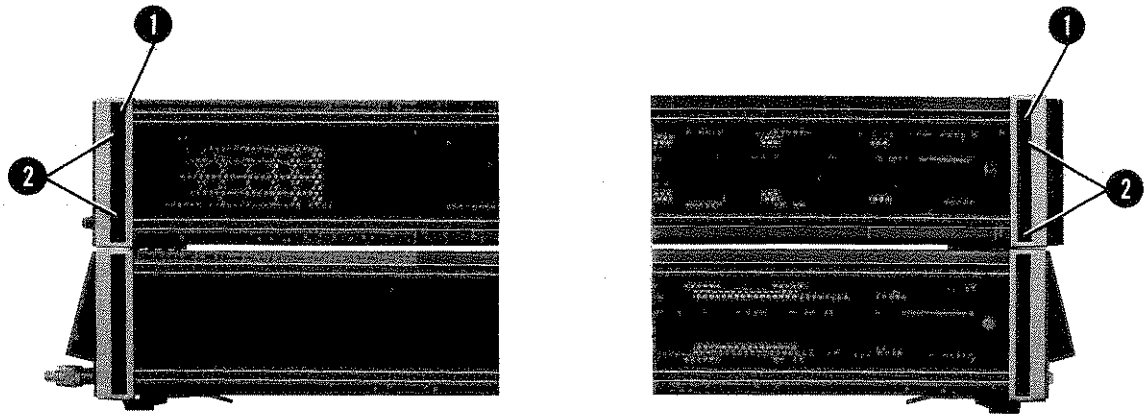

VIEW A

3. Loosen thumbscrews ❸ shown in View B used to fasten instrument sections together.

4. Separate instrument sections by holding RF Section in place while pulling forward toward front panel on IF-Display Section.

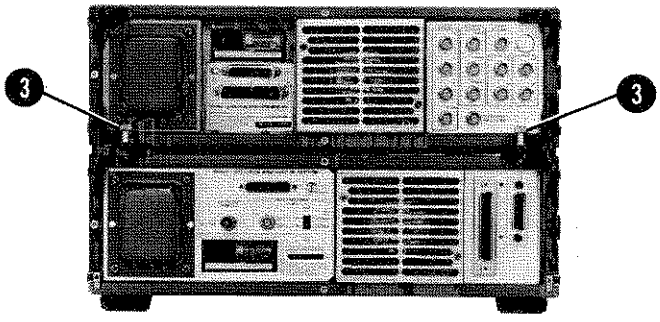

VIEW B

5. After instruments have been separated, lift IF-Display Section off of RF Section and place on left side as shown in View C.

6. Remove two screws (4) from bottom of instrument used to secure front panel to frame.

7. Remove trim strip (5) shown in View D by inserting blade of small flat blade screwdriver into slot (6) and lifting upwards.

8. Remove two screws (7) located under trim strip (5) as shown in View D.

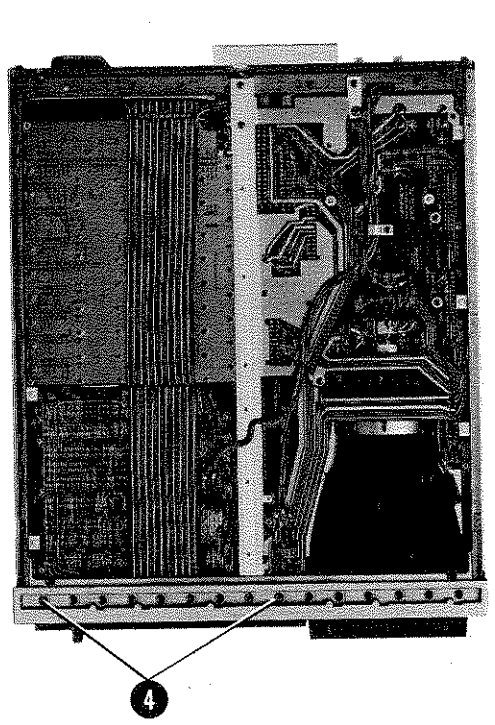

VIEW C

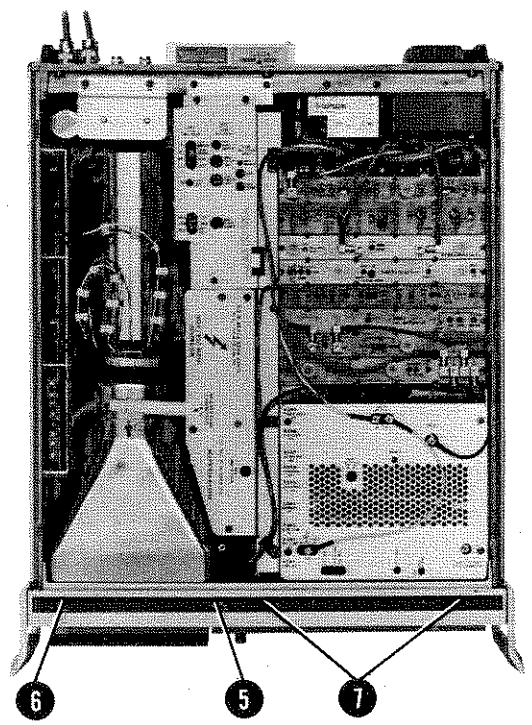

VIEW D

9. Place instrument in position shown in View E and pull front panel forward to position shown.

10. Disconnect cable (8) from A1A10 Motherboard as shown in View E. Disconnect cable (9) at connector (10) and cable (11) at connector (12) on A3A10 Motherboard.

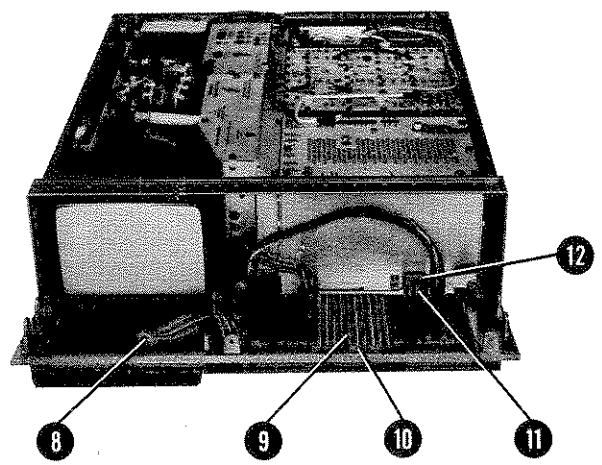

VIEW E

11. Front panel is now loose from instrument as shown in View F.

12. To remove A1A1 Keyboard, remove nine screws (13) used to fasten Keyboard to frame.

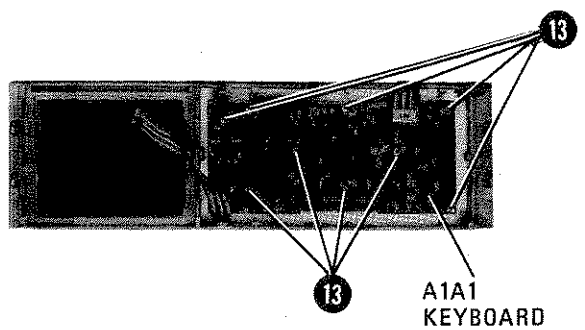

VIEW F

FIGURE 2. FRONT PANEL REMOVAL AND REPAIR

TABLE 1. A1A1, REPLACEABLE PARTS

Reference Designation	HP Part Number	CD	Qty	Description	Mfr Code	Mfr Part Number
A1A1	85662-60001	1	1	KEYBOARD ASSEMBLY (INCLUDES W1 AND W9)	28480	85662-60001
	85662-60129	4	1	RESTORED 85662-60001	28480	85662-60129
A1A1C1	0160-4084	8	1	CAPACITOR-FXD .1UF +-20% 50VDC CER	28480	0160-4084
A1A1DS1	1990-0485	5	1	LED-LAMP LUM-INT=800UCD IF=30MA-MAX	28480	5082-4984
A1A1DS2	1990-0487	7	17	LED-LAMP LUM-INT=1MCD IF=20MA-MAX BVR=5V	28480	5082-4584
A1A1DS3	1990-0487	7		LED-LAMP LUM-INT=1MCD IF=20MA-MAX BVR=5V	28480	5082-4584
A1A1DS4	1990-0487	7		LED-LAMP LUM-INT=1MCD IF=20MA-MAX BVR=5V	28480	5082-4584
A1A1DS5	1990-0487	7		LED-LAMP LUM-INT=1MCD IF=20MA-MAX BVR=5V	28480	5082-4584
A1A1DS6	1990-0487	7		LED-LAMP LUM-INT=1MCD IF=20MA-MAX BVR=5V	28480	5082-4584
A1A1DS7	1990-0487	7		LED-LAMP LUM-INT=1MCD IF=20MA-MAX BVR=5V	28480	5082-4584
A1A1DS8	1990-0487	7		LED-LAMP LUM-INT=1MCD IF=20MA-MAX BVR=5V	28480	5082-4584
A1A1DS9	1990-0487	7		LED-LAMP LUM-INT=1MCD IF=20MA-MAX BVR=5V	28480	5082-4584
A1A1DS10	1990-0487	7		LED-LAMP LUM-INT=1MCD IF=20MA-MAX BVR=5V	28480	5082-4584
A1A1DS11	1990-0487	7		LED-LAMP LUM-INT=1MCD IF=20MA-MAX BVR=5V	28480	5082-4584
A1A1DS12	1990-0487	7		LED-LAMP LUM-INT=1MCD IF=20MA-MAX BVR=5V	28480	5082-4584
A1A1DS13	1990-0487	7		LED-LAMP LUM-INT=1MCD IF=20MA-MAX BVR=5V	28480	5082-4584
A1A1DS14	1990-0487	7		LED-LAMP LUM-INT=1MCD IF=20MA-MAX BVR=5V	28480	5082-4584
A1A1DS15	1990-0487	7		LED-LAMP LUM-INT=1MCD IF=20MA-MAX BVR=5V	28480	5082-4584
A1A1DS16	1990-0487	7		LED-LAMP LUM-INT=1MCD IF=20MA-MAX BVR=5V	28480	5082-4584
A1A1DS17	1990-0487	7		LED-LAMP LUM-INT=1MCD IF=20MA-MAX BVR=5V	28480	5082-4584
A1A1DS18	1990-0487	7		LED-LAMP LUM-INT=1MCD IF=20MA-MAX BVR=5V	28480	5082-4584
A1A1J1	1251-5269	7	1	CONNECTOR 50-PIN M POST TYPE	28480	1251-5269
A1A1Q1	1854-0404	0	2	TRANSISTOR NPN SI TO-18 PD=360MW	28480	1854-0404
A1A1Q2	1854-0404	0		TRANSISTOR NPN SI TO-18 PD=360MW	28480	1854-0404
A1A1R1	2100-3587	0	1	RESISTOR-VAR CONTROL CP 2K 10% 10CW	28480	2100-3587
A1A1R2	2100-2452	6	3	RESISTOR-TRMR 25K 20% CCP TOP-ADJ 1-TRN	01121	FR253M
A1A1R3	2100-2452	6		RESISTOR-TRMR 25K 20% CCP TOP-ADJ 1-TRN	01121	FR253M
A1A1R4	0698-3157	3	1	RESISTOR 19.6K 1% .125W F TC=0+-100	24546	C4-1/8-T0-1962-F
A1A1R5	0757-0420	3	1	RESISTOR 750 1% .125W F TC=0+-100	24546	C4-1/8-T0-751-F
A1A1R6	0757-0442	9	2	RESISTOR 10K 1% .125W F TC=0+-100	24546	C4-1/8-T0-1002-F
A1A1R7	0757-0442	9		RESISTOR 10K 1% .125W F TC=0+-100	24546	C4-1/8-T0-1002-F
A1A1R8	2100-2452	6		RESISTOR-TRMR 25K 20% CCP TOP-ADJ 1-TRN	01121	FR253M
A1A1R9	0698-3444	1	3	RESISTOR 316 1% .125W F TC=0+-100	24546	C4-1/8-T0-316R-F
A1A1R10	0698-3161	9	2	RESISTOR 38.3K 1% .125W F TC=0+-100	24546	C4-1/8-T0-3832-F
A1A1R11	0698-3161	9		RESISTOR 38.3K 1% .125W F TC=0+-100	24546	C4-1/8-T0-3832-F
A1A1R12	2100-3647	3	1	RESISTOR-VAR CONTROL CP 5K 10% LIN	28480	2100-3647
A1A1R13	0698-3444	1		RESISTOR 316 1% .125W F TC=0+-100	24546	C4-1/8-T0-316R-F
A1A1R14	0698-3444	1		RESISTOR 316 1% .125W F TC=0+-100	24546	C4-1/8-T0-316R-F
A1A1R15	0757-0401	0	1	RESISTOR 100 1% .125W F TC=0+-100	24546	C4-1/8-T0-101-F
A1A1S1-A1A1S28	5060-9436	7	28	PUSHBUTTON SWITCH P.C. MOUNT	28480	5060-9436
A1A1U1	1820-1730	6	2	IC FF TTL LS D-TYPE POS-EDGE-TRIG COM	01295	SN74LS273N
A1A1U2	1820-1730	6		IC FF TTL LS D-TYPE POS-EDGE-TRIG COM	01295	SN74LS273N
A1A1U3	1810-0203	5	2	NETWORK-RES 8-SIP470.0 OHM X 7	01121	208A471
A1A1U4	1810-0203	5		NETWORK-RES 8-SIP470.0 OHM X 7	01121	208A471
				MISCELLANEOUS PARTS		
	0380-1233	9	16	SPACER-SPECIALTY .450 IN LG; .175 IN OD	00000	ORDER BY DESCRIPTION

TABLE 2. A1A2, REPLACEABLE PARTS (1 OF 2)

Reference Designation	HP Part Number	C D	Qty	Description	Mfr Code	Mfr Part Number
A1A2	85662-60100	1	1	BOARD ASSEMBLY, Z-AXIS AMPLIFIER	28480	85662-60100
A1A2C1	0180-0374	3	2	CAPACITOR-FXD 10UF+-10% 20VDC TA	56289	150D106X9020B2
A1A2C2	0180-0374	3		CAPACITOR-FXD 10UF+-10% 20VDC TA	56289	150D106X9020B2
A1A2C3	0160-3670	6	10	CAPACITOR-FXD .1UF +-20% 200VDC CER	28480	0160-3670
A1A2C4	0160-4084	8	5	CAPACITOR-FXD .1UF +-20% 50VDC CER	28480	0160-4084
A1A2C5	0160-4084	8		CAPACITOR-FXD .1UF +-20% 50VDC CER	28480	0160-4084
A1A2C6	0160-2204	0	2	CAPACITOR-FXD 100PF +-5% 300VDC MICA	28480	0160-2204
A1A2C7	0160-2308	5	1	CAPACITOR-FXD 36PF +-5% 300VDC MICA	28480	0160-2308
A1A2C8	0160-3670	6		CAPACITOR-FXD .1UF +-20% 200VDC CER	28480	0160-3670
A1A2C9	0160-3670	6		CAPACITOR-FXD .1UF +-20% 200VDC CER	28480	0160-3670
A1A2C10	0121-0474	8	1	CAPACITOR-V TRMR-PSTN .3-1.5PF 600V	28480	0121-0474
A1A2C11	0160-3670	6		CAPACITOR-FXD .1UF +-20% 200VDC CER	28480	0160-3670
A1A2C12	0160-3670	6		CAPACITOR-FXD .1UF +-20% 200VDC CER	28480	0160-3670
A1A2C13	0160-3670	6		CAPACITOR-FXD .1UF +-20% 200VDC CER	28480	0160-3670
A1A2C14	0160-4084	8		CAPACITOR-FXD .1UF +-20% 50VDC CER	28480	0160-4084
A1A2C15	0160-4084	8		CAPACITOR-FXD .1UF +-20% 50VDC CER	28480	0160-4084
A1A2C16	0180-0269	5	1	CAPACITOR-FXD 1UF+50-10% 150VDC AL	56289	30D105G150BA2
A1A2C17	0160-4084	8		CAPACITOR-FXD .1UF +-20% 50VDC CER	28480	0160-4084
A1A2C18	0160-2204	0		CAPACITOR-FXD 100PF +-5% 300VDC MICA	28480	0160-2204
A1A2C19	0160-3670	6		CAPACITOR-FXD .1UF +-20% 200VDC CER	28480	0160-3670
A1A2C20	0160-2238	0	1	CAPACITOR-FXD 1.5PF +-.25PF 500VDC CER	28480	0160-2238
A1A2C21	0160-3670	6		CAPACITOR-FXD .1UF +-20% 200VDC CER	28480	0160-3670
A1A2C22	0160-3670	6		CAPACITOR-FXD .1UF +-20% 200VDC CER	28480	0160-3670
A1A2C23	0160-3670	6		CAPACITOR-FXD .1UF +-20% 200VDC CER	28480	0160-3670
A1A2CR1	1901-0535	9	1	DIODE-SM SIG SCHOTTKY	28480	1901-0535
A1A2CR2	1901-0096	7	2	DIODE-SWITCHING 120V 50MA 100NS	28480	1901-0096
A1A2CR3	1901-0028	5	4	DIODE-PWR RECT 400V 750MA DO-29	28480	1901-0028
A1A2CR4	1901-0028	5		DIODE-PWR RECT 400V 750MA DO-29	28480	1901-0028
A1A2CR5	1901-0096	7		DIODE-SWITCHING 120V 50MA 100NS	28480	1901-0096
A1A2CR6	1901-0028	5		DIODE-PWR RECT 400V 750MA DO-29	28480	1901-0028
A1A2CR7	1901-0028	5		DIODE-PWR RECT 400V 750MA DO-29	28480	1901-0028
A1A2L1	9140-0210	1	3	INDUCTOR RF-CH-MLD 100UH 5% .166DX.385LG	28480	9140-0210
A1A2L2	9140-0210	1		INDUCTOR RF-CH-MLD 100UH 5% .166DX.385LG	28480	9140-0210
A1A2L3	9140-0210	1		INDUCTOR RF-CH-MLD 100UH 5% .166DX.385LG	28480	9140-0210
A1A2Q1	1853-0232	8	2	TRANSISTOR PNP SI TO-39 PD=1W FT=200MHZ	28480	1853-0232
A1A2Q2	1854-0419	7	2	TRANSISTOR NPN SI TO-39 PD=1W FT=200MHZ	28480	1854-0419
A1A2Q3	1853-0232	0		TRANSISTOR PNP SI TO-39 PD=1W FT=200MHZ	28480	1853-0232
A1A2Q4	1853-0007	7	4	TRANSISTOR PNP 2N3251 SI TO-18 PD=360MW	04713	2N3251
A1A2Q5	1854-0404	0	8	TRANSISTOR NPN SI TO-18 PD=360MW	28480	1854-0404
A1A2Q6	1854-0419	7		TRANSISTOR NPN SI TO-39 PD=1W FT=200MHZ	28480	1854-0419
A1A2Q7	1854-0404	0		TRANSISTOR NPN SI TO-18 PD=360MW	28480	1854-0404
A1A2Q8	1854-0404	0		TRANSISTOR NPN SI TO-18 PD=360MW	28480	1854-0404
A1A2Q9	1853-0007	7		TRANSISTOR PNP 2N3251 SI TO-18 PD=360MW	04713	2N3251
A1A2Q10	1853-0007	7		TRANSISTOR PNP 2N3251 SI TO-18 PD=360MW	04713	2N3251
A1A2Q11	1853-0007	7		TRANSISTOR PNP 2N3251 SI TO-18 PD=360MW	04713	2N3251
A1A2Q12	1854-0404	0		TRANSISTOR NPN SI TO-18 PD=360MW	28480	1854-0404
A1A2Q13	1854-0404	0		TRANSISTOR NPN SI TO-18 PD=360MW	28480	1854-0404
A1A2Q14	1854-0404	0		TRANSISTOR NPN SI TO-18 PD=360MW	28480	1854-0404
A1A2Q15	1854-0404	0		TRANSISTOR NPN SI TO-18 PD=360MW	28480	1854-0404
A1A2Q16	1854-0404	0		TRANSISTOR NPN SI TO-18 PD=360MW	28480	1854-0404
A1A2R1	0757-0394	0	8	RESISTOR 51.1 1% .125W F TC=0+-100	24546	C4-1/8-T0-51R1-F
A1A2R2	0757-0394	0		RESISTOR 51.1 1% .125W F TC=0+-100	24546	C4-1/8-T0-51R1-F
A1A2R3	0757-0442	9	2	RESISTOR 10K 1% .125W F TC=0+-100	24546	C4-1/8-T0-1002-F
A1A2R4	0757-0394	0		RESISTOR 51.1 1% .125W F TC=0+-100	24546	C4-1/8-T0-51R1-F
A1A2R5	2100-3351	6	2	RESISTOR-TRMR 500 10% C SIDE-ADJ 1-TRN	28480	2100-3351
A1A2R6	0757-0394	0		RESISTOR 51.1 1% .125W F TC=0+-100	24546	C4-1/8-T0-51R1-F
A1A2R7	0757-0280	7	3	RESISTOR 5.62K 1% .125W F TC=0+-100	24546	C4-1/8-T0-5621-F
A1A2R8	0757-0416	7	1	RESISTOR 511 1% .125W F TC=0+-100	24546	C4-1/8-T0-511R-F
A1A2R9	0757-0280	7		RESISTOR 5.62K 1% .125W F TC=0+-100	24546	C4-1/8-T0-5621-F
A1A2R10	0757-0441	8	1	RESISTOR 8.25K 1% .125W F TC=0+-100	24546	C4-1/8-T0-8251-F
A1A2R11	0698-0085	0	1	RESISTOR 2.61K 1% .125W F TC=0+-100	24546	C4-1/8-T0-2611-F
A1A2R12	0757-0443	0	2	RESISTOR 11K 1% .125W F TC=0+-100	24546	C4-1/8-T0-1102-F
A1A2R13	0757-0280	3	5	RESISTOR 1K 1% .125W F TC=0+-100	24546	C4-1/8-T0-1001-F
A1A2R14	0757-0280	3		RESISTOR 1K 1% .125W F TC=0+-100	24546	C4-1/8-T0-1001-F
A1A2R15	0757-0346	2	1	RESISTOR 10 1% .125W F TC=0+-100	24546	C4-1/8-T0-10R0-F
A1A2R16	0698-0084	9	3	RESISTOR 2.15K 1% .125W F TC=0+-100	24546	C4-1/8-T0-2151-F
A1A2R17	0757-0280	3		RESISTOR 1K 1% .125W F TC=0+-100	24546	C4-1/8-T0-1001-F
A1A2R18	0698-0084	9		RESISTOR 2.15K 1% .125W F TC=0+-100	24546	C4-1/8-T0-2151-F
A1A2R19	0757-0421	4	2	RESISTOR 825 1% .125W F TC=0+-100	24546	C4-1/8-T0-825R-F
A1A2R20	0757-0428	1	1	RESISTOR 1.62K 1% .125W F TC=0+-100	24546	C4-1/8-T0-1621-F

TABLE 2. A1A2, REPLACEABLE PARTS (2 OF 2)

Reference Designation	HP Part Number	C D	Qty	Description	Mfr Code	Mfr Part Number
A1A2R21	0757-0443	0		RESISTOR 11K 1% .125W F TC=0+-100	24546	C4-1/8-T0-1102-F
A1A2R22	2100-3207	1	1	RESISTOR-TRMR 5K 10% C SIDE-ADJ 1-TRN	28480	2100-3207
A1A2R23	0698-3152	8	2	RESISTOR 3.48K 1% .125W F TC=0+-100	24546	C4-1/8-T0-3481-F
A1A2R24	0698-3416	7	2	RESISTOR 21.5K 1% .5W F TC=0+-100	28480	0698-3416
A1A2R25	0757-0841	2	2	RESISTOR 12.1K 1% .5W F TC=0+-100	28480	0757-0841
A1A2R26	0698-3151	7	2	RESISTOR 2.87K 1% .125W F TC=0+-100	24546	C4-1/8-T0-2871-F
A1A2R27	0757-0394	0		RESISTOR 51.1 1% .125W F TC=0+-100	24546	C4-1/8-T0-51R1-F
A1A2R28	0757-0394	0		RESISTOR 51.1 1% .125W F TC=0+-100	24546	C4-1/8-T0-51R1-F
A1A2R29	0757-0819	4	2	RESISTOR 909 1% .5W F TC=0+-100	28480	0757-0819
A1A2R30	2100-3351	6		RESISTOR-TRMR 500 10% C SIDE-ADJ 1-TRN	28480	2100-3351
A1A2R31	2100-3353	8	1	RESISTOR-TRMR 20K 10% C SIDE-ADJ 1-TRN	28480	2100-3353
A1A2R32	2100-3355	0	1	RESISTOR-TRMR 100K 10% C SIDE-ADJ 1-TRN	28480	2100-3355
A1A2R33	0698-3158	4	1	RESISTOR 23.7K 1% .125W F TC=0+-100	24546	C4-1/8-T0-2372-F
A1A2R34	0757-0280	3		RESISTOR 1K 1% .125W F TC=0+-100	24546	C4-1/8-T0-1001-F
A1A2R35	2100-3354	9	2	RESISTOR-TRMR 50K 10% C SIDE-ADJ 1-TRN	28480	2100-3354
A1A2R36	2100-3354	9		RESISTOR-TRMR 50K 10% C SIDE-ADJ 1-TRN	28480	2100-3354
A1A2R37	0698-0084	9		RESISTOR 2.15K 1% .125W F TC=0+-100	24546	C4-1/8-T0-2151-F
A1A2R38	0698-3440	7	2	RESISTOR 196 1% .125W F TC=0+-100	24546	C4-1/8-T0-196R-F
A1A2R39	0757-0274	5	1	RESISTOR 1.21K 1% .125W F TC=0+-100	24546	C4-1/8-T0-1211-F
A1A2R40	0698-3440	7		RESISTOR 196 1% .125W F TC=0+-100	24546	C4-1/8-T0-196R-F
A1A2R41	0757-0200	7		RESISTOR 5.62K 1% .125W F TC=0+-100	24546	C4-1/8-T0-5621-F
A1A2R42	0757-0421	4		RESISTOR 825 1% .125W F TC=0+-100	24546	C4-1/8-T0-825R-F
A1A2R43	0757-0442	9		RESISTOR 10K 1% .125W F TC=0+-100	24546	C4-1/8-T0-1002-F
A1A2R44	0757-0280	3		RESISTOR 1K 1% .125W F TC=0+-100	24546	C4-1/8-T0-1001-F
A1A2R45	0698-3152	8		RESISTOR 3.48K 1% .125W F TC=0+-100	24546	C4-1/8-T0-3481-F
A1A2R46	0698-3416	7		RESISTOR 21.5K 1% .5W F TC=0+-100	28480	0698-3416
A1A2R47	0757-0841	2		RESISTOR 12.1K 1% .5W F TC=0+-100	28480	0757-0841
A1A2R48	0698-3151	7		RESISTOR 2.87K 1% .125W F TC=0+-100	24546	C4-1/8-T0-2871-F
A1A2R49	0757-0394	0		RESISTOR 51.1 1% .125W F TC=0+-100	24546	C4-1/8-T0-51R1-F
A1A2R50	0757-0394	0		RESISTOR 51.1 1% .125W F TC=0+-100	24546	C4-1/8-T0-51R1-F
A1A2R51	0757-0819	4		RESISTOR 909 1% .5W F TC=0+-100	28480	0757-0819
A1A2TP1	0360-0535	0	3	TERMINAL TEST POINT PCB	00000	ORDER BY DESCRIPTION
A1A2TP2	0360-0535	0		TERMINAL TEST POINT PCB	00000	ORDER BY DESCRIPTION
A1A2TP3	0360-0535	0		TERMINAL TEST POINT PCB	00000	ORDER BY DESCRIPTION
A1A2VR1	1902-3333	3	1	DIODE-ZNR 46.4V 5% DO-7 PD=.4W	28480	1902-3333
A1A2VR2	1902-3357	1	1	DIODE-ZNR 56.2V 5% DO-7 PD=.4W TC=+.081%	28480	1902-3357
A1A2VR3	1902-0049	2	1	DIODE-ZNR 6.19V 5% DO-35 PD=.4W	28480	1902-0049
				MISCELLANEOUS PARTS		
	5000-9043	6	1	PIN: PC, BOARD EXTRACTOR	28480	5000-9043
	5040-6843	2	1	EXTRACTOR, PC BOARD	28480	5040-6843

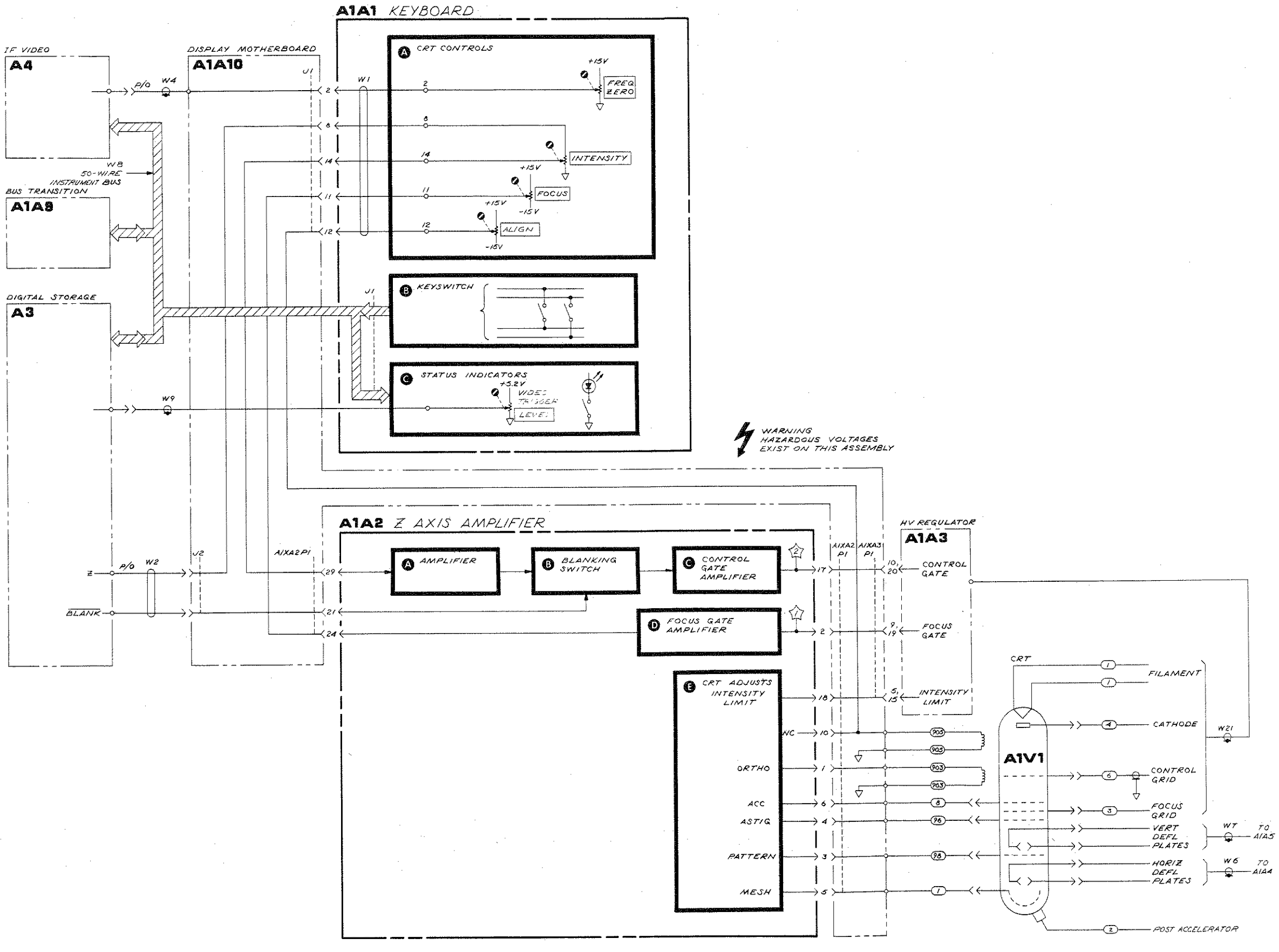

A1A1
A1A2

FIGURE 3. A1A1 KEYBOARD AND A1A2 Z AXIS AMPLIFIER, BLOCK DIAGRAM

A1
FRONT PANEL

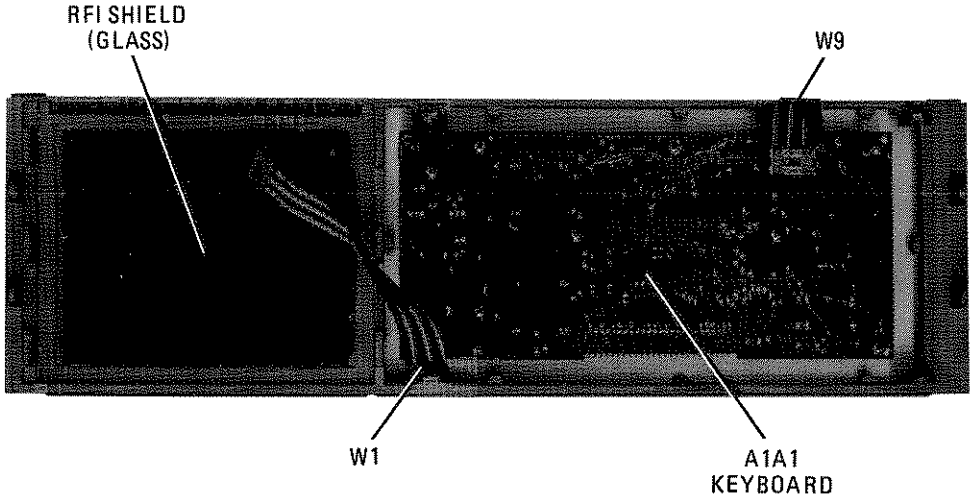

FIGURE 4. A1 FRONT PANEL, ASSEMBLY AND COMPONENT LOCATIONS

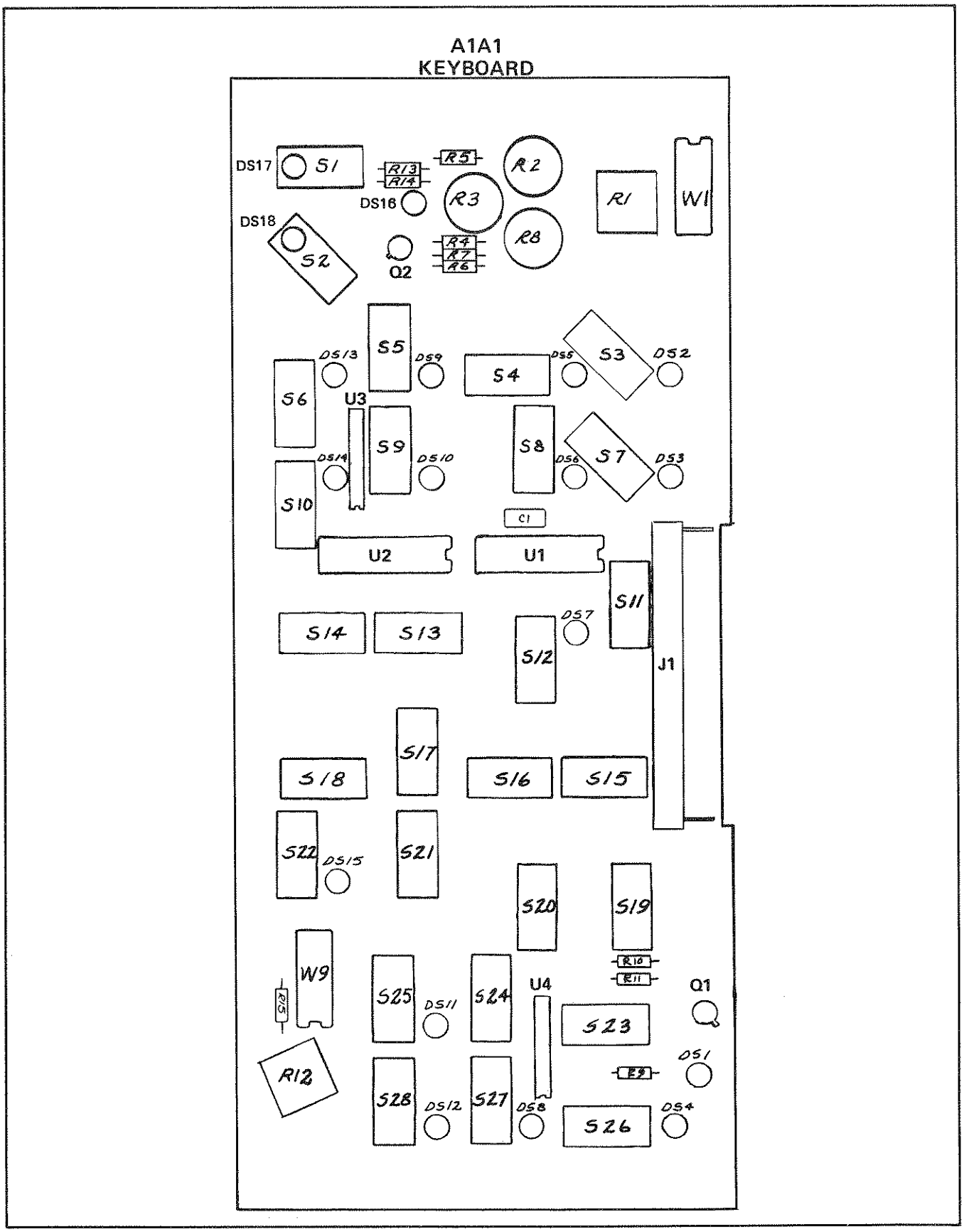

FIGURE 5. A1A1 KEYBOARD, COMPONENT LOCATIONS

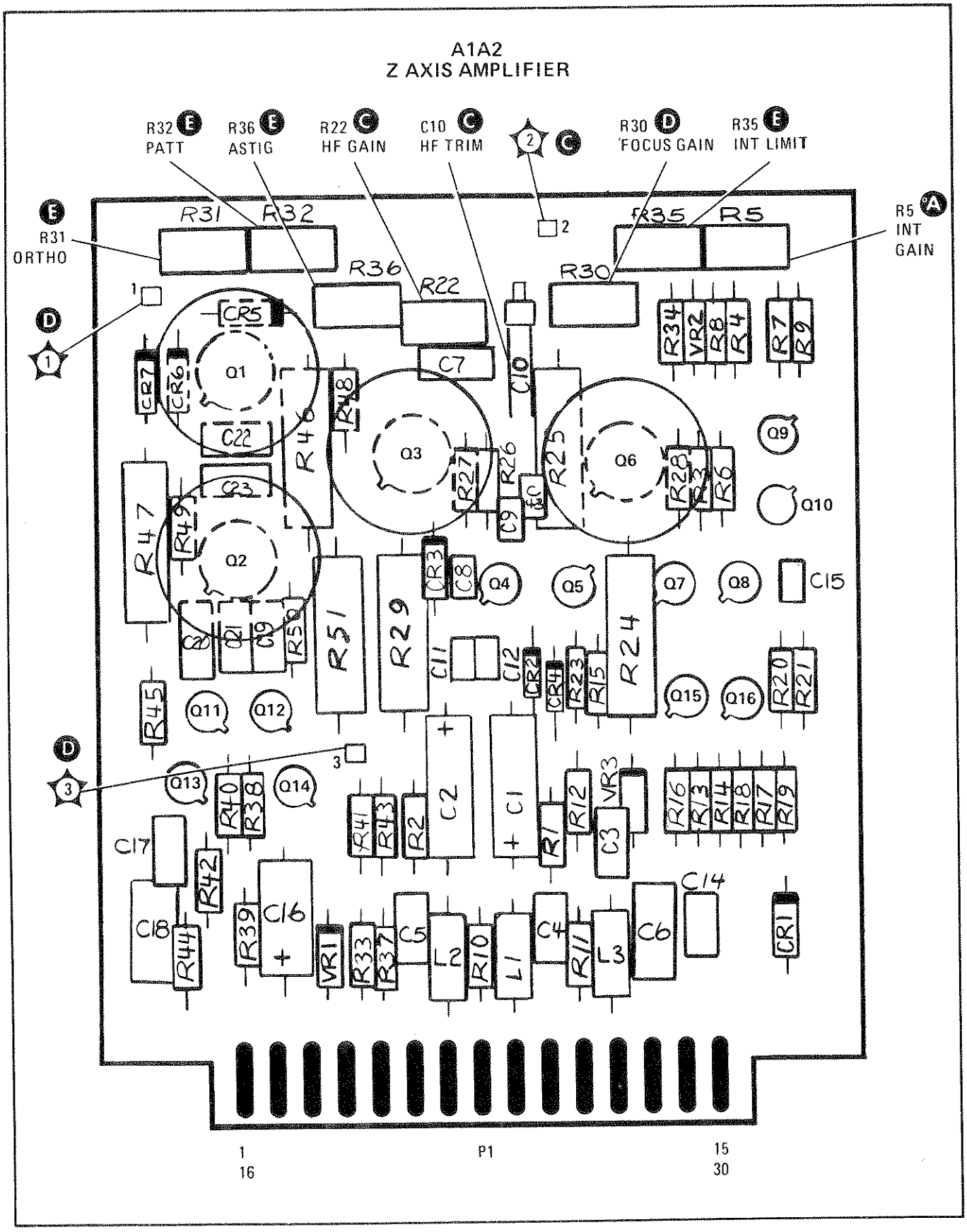

FIGURE 6. A1A2 Z AXIS AMPLIFIER, COMPONENT LOCATIONS

A1A1 KEYBOARD
85662-60001

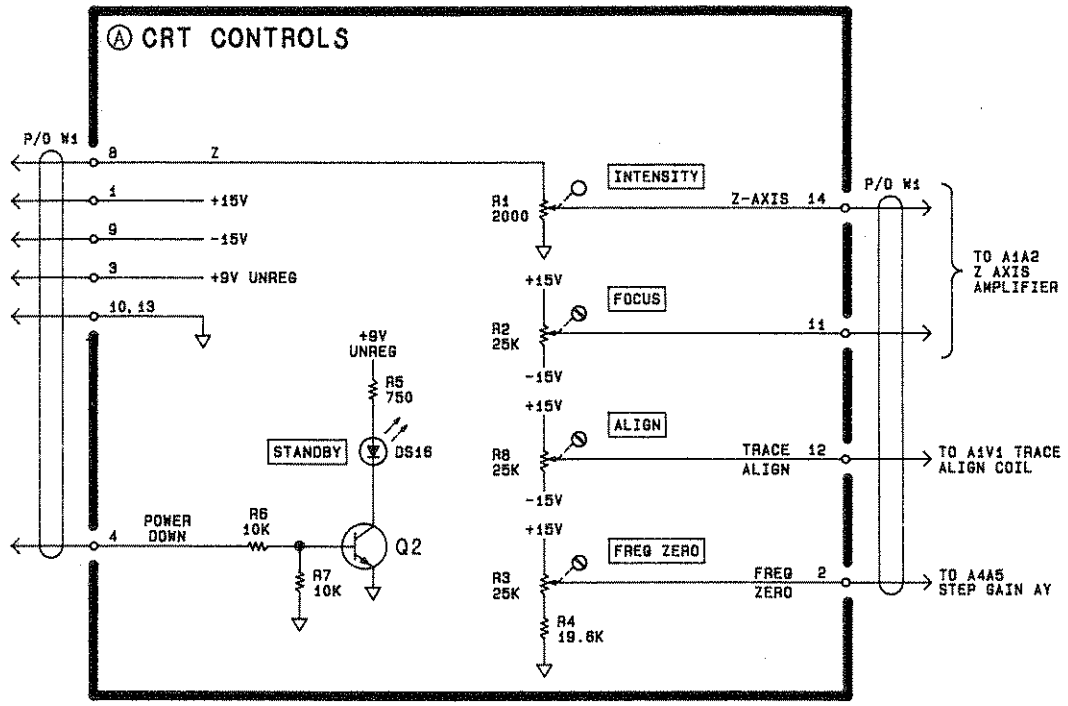

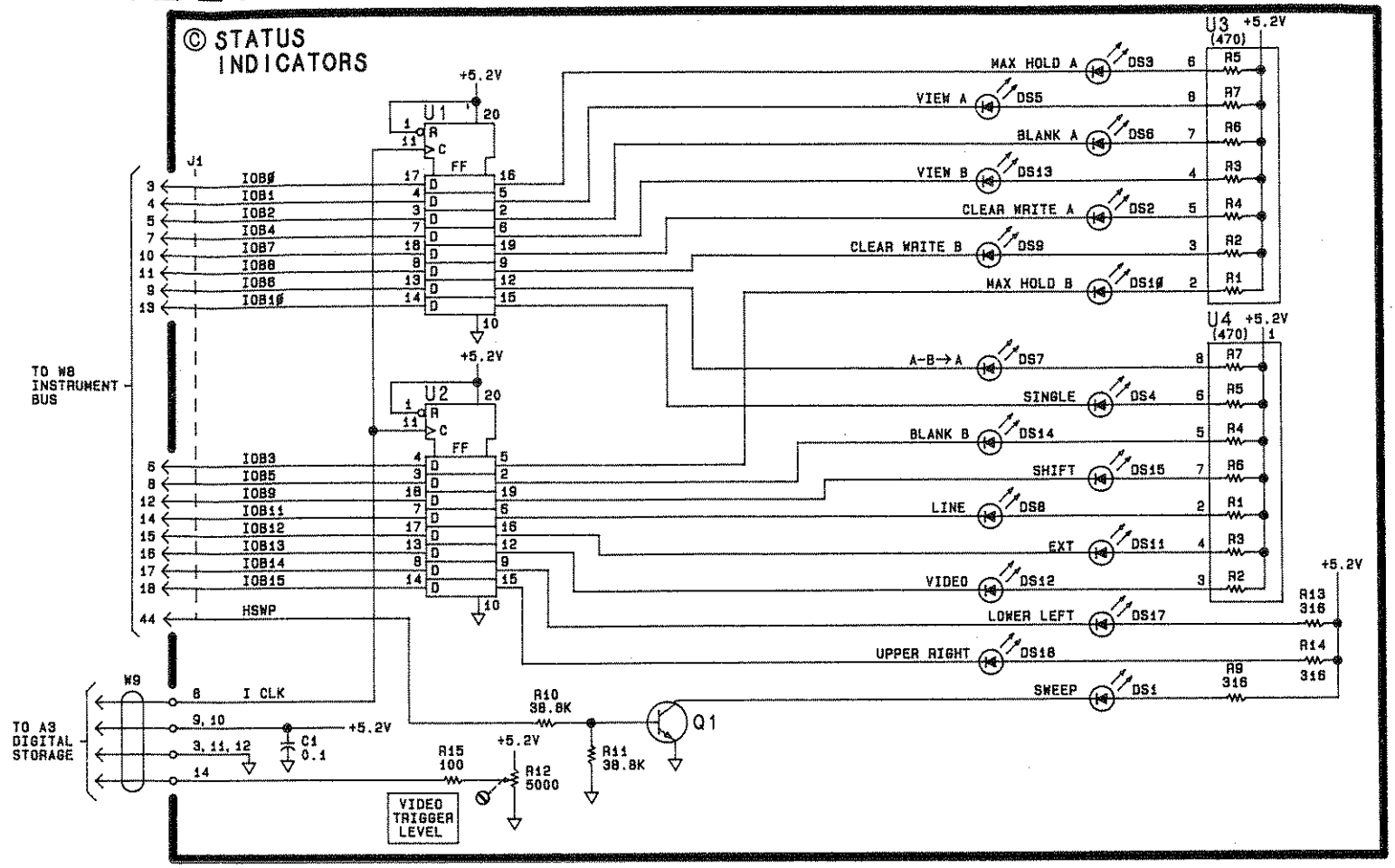

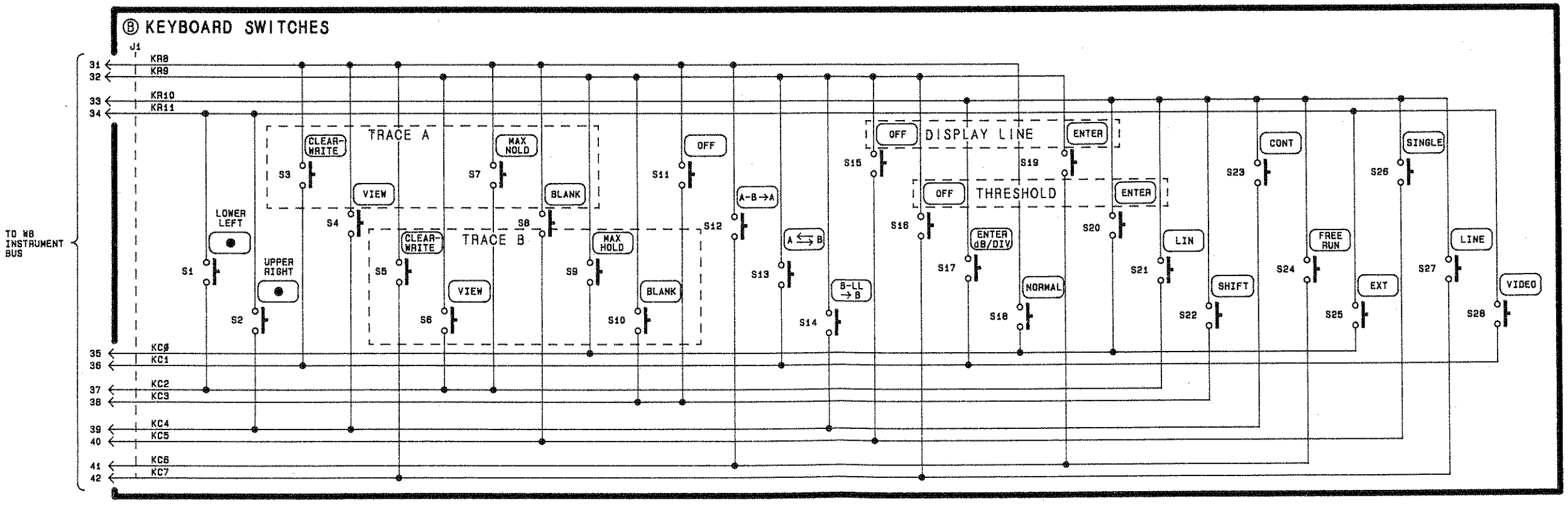

A1A2 Z AXIS
85662-6010(

P1

PIN	SIGNAL	TO/FR
1 18	ORTHO GND	A1V1
2 17	FOCUS GATE CONTROL GATE	A1A3 A1A3
3 18	PATTERN INTENSITY LIMIT	A1V1 A1A3
4 19	ASTIG GND	A1V1
5 20	MESH GND	A1V1
6 21	ACC LBLANK	A1V1 A3A2
7 22	-15V NC	
8 23	GND GND	
9 24	+15V FOCUS	A1A1
10 25	TRACE ALIGN NC	NC
11 26	GND GND	
12 27	+100V GND	
13 28	GND GND	
14 29	GND Z-AXIS	A1A1
15 30	GND GND	

SERIAL PREFIX: 2403A

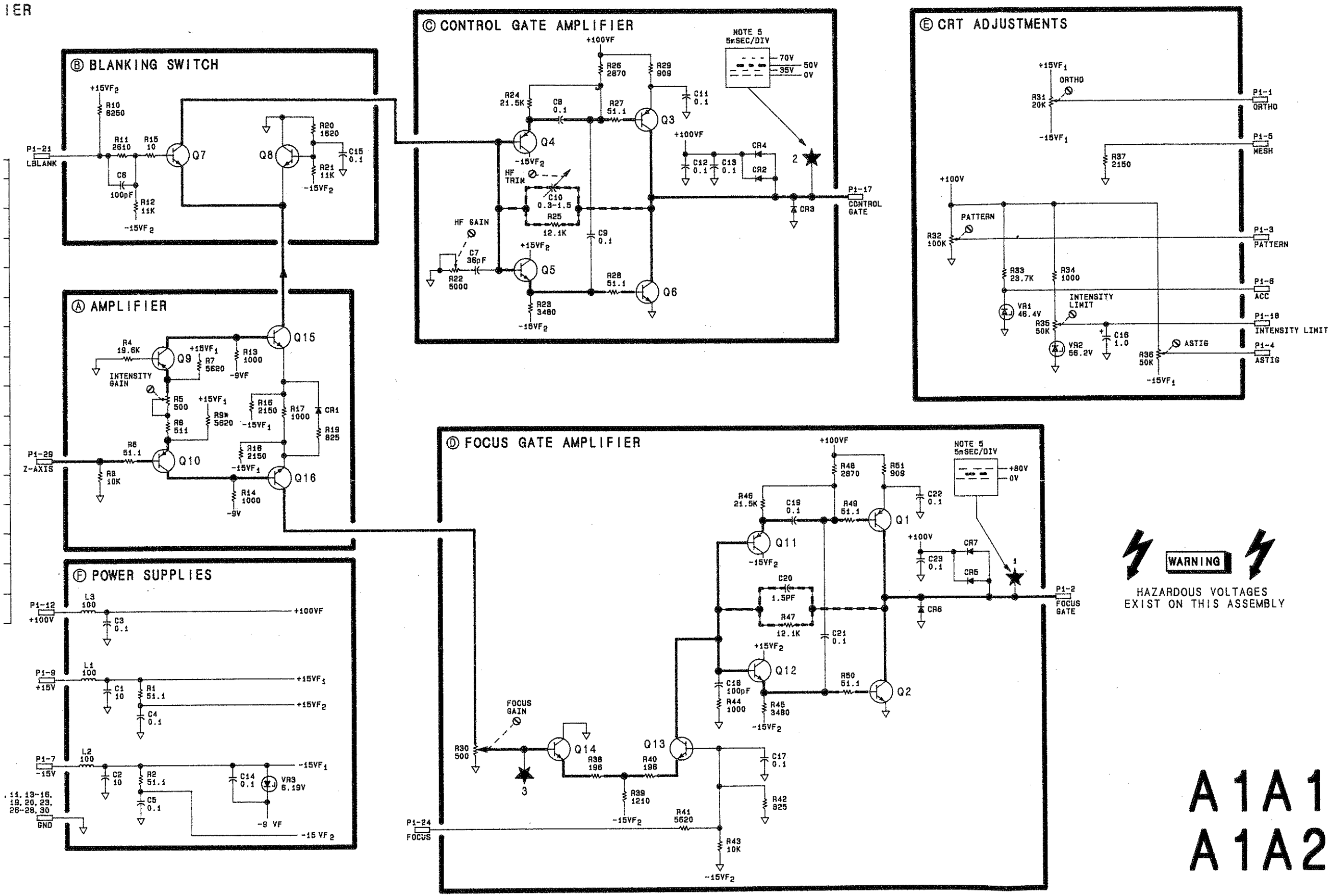

NOTES:

1. REFERENCE DESIGNATORS WITHIN THIS ASSEMBLY ARE ABBREVIATED. FOR COMPLETE REFERENCE DESIGNATION, PREFIX ABBREVIATION WITH ASSEMBLY DESIGNATION.
2. UNLESS OTHERWISE INDICATED: RESISTANCE IS IN OHMS (Ω) CAPACITANCE IS IN MICROFARADS (μF) INDUCTANCE IS IN MICROHENRIES (μH)
3. UNLESS OTHERWISE INDICATED: SIGNALS ENTER AT LEFT SIDE OR TOP AND EXIT AT RIGHT SIDE OR BOTTOM OF FUNCTION BLOCKS.
4. MNEMONIC TABLE:

MNEMONIC	DESCRIPTION
ORTHO	ORTHOGONAL
ACC	ACCELERATOR
ASTIG	ASTIGMATISM
Z	AUXILLARY Z OUTPUT
LBLANK	(LOW: CRT BEAM BLANKED)
Z-AXIS	INTENSITY SIGNAL
ICLK	INDICATOR CLOCK (FRONT PANEL LEDS)

5. TEST POINT WAVEFORM ASSUME INSTRUMENT PRESET CONDITION. ACTUAL AMPLITUDE OF SIGNALS IS DETERMINED BY SETTING OF A1A1R1 INTENSITY CONTROL.
6. 50-WIRE INSTRUMENT BUS, MNEMONIC/PIN NUMBER INDEX.

PIN	SIGNAL	DESCRIPTION
1	GND	GROUND
2	NC	NO CONNECTION
3	IOB0	INSTRUMENT BUS DATA BITS 0-15
4	IOB1	
5	IOB2	
6	IOB3	
7	IOB4	
8	IOB5	
9	IOB6	
10	IOB7	
11	IOB8	
12	IOB9	
13	IOB10	
14	IOB11	
15	IOB12	
16	IOB13	
17	IOB14	
18	IOB15	
19	NC	NO CONNECTION
20	NC	NO CONNECTION
21	NC	NO CONNECTION
22	HPON	HIGH=DISPLAY SECTION POWER ON
23	ADR0	INSTRUMENT BUS ADDRESS BITS 0-5
24	ADR1	
25	ADR2	
26	ADR3	
27	ADR4	
28	ADR5	
29	NC	NO CONNECTION
30	NC	NO CONNECTION
31	KR8	KEY ROWS 8-11
32	KR9	
33	KR10	
34	KR11	
35	KC0	KEY COLUMNS 0-7
36	KC1	
37	KC2	
38	KC3	
39	KC4	
40	KC5	
41	KC6	
42	KC7	
43	LSTP	LOW=STOP PROCESSOR
44	HSWP	HIGH=SWEEPING
45	LSRQ	LOW=SERVICE REQUEST
46	LDSR	LOW=DIGITAL STORAGE READY
47	LBIO	LOW=RF SECTION I/O STROBE
48	GND	GROUND
49	LTIO	LOW=DISPLAY SECTION I/O STROBE
50	GND	GROUND

6. * INDICATES FACTORY SELECTED COMPONENT. REFER TO SECTION XV FOR RANGE OF VALUES

FIGURE 7. A1A1 KEYBOARD AND A1A2 Z AXIS AMPLIFIER, SCHEMATIC DIAGRAM

A1A3 HIGH VOLTAGE REGULATOR, CIRCUIT DESCRIPTION

WARNING

The CRT filament potential is connected to the −4000 Vdc cathode potential, which is dangerous to life.

The post-accelerator potential of approximately +18 kV is supplied by High Voltage Multiplier A1A11 (refer to block diagram).

High-Voltage Transformer (A)
High-Voltage Rectifier and Filter (B)

The cathode of CRT A1V1 operates at −4000 Vdc. This voltage is generated by rectifying an ac signal (approximately 30 kHz) on the secondary of High-Voltage Transformer T1. The primary side of T1 is an oscillator circuit located in A1A6 ±15V Regulator. The rectifier circuit consists of CR1 and filter components C1, R3, and C3. The CRT filament voltage of 4.45 Vrms is generated by another secondary winding of T1 and is held at −4000 Vdc by R1.

The cathode voltage is stabilized by a feedback control circuit consisting of R4, C4, and the amplifier circuit in A1A6 ±15V Regulator in conjunction with a primary feedback winding on T1. (Refer to the circuit description of A1A6.) The cathode voltage is set by HV ADJ potentiometer A1A6R32 in the Oscillator Level Control circuit of A1A6.

Control Grid Level Shift (C)

The control grid voltage is provided by generating a bias voltage with respect to the cathode voltage. This bias voltage is generated by a capacitively coupled, clipped sine-wave signal at the junction of C2 and C5. The sine wave is derived from the T1 secondary through R2. The upper clipping level is set by INTENSITY LIMIT adjustment A1A2R35 in A1A2 Z Axis Amplifier. The lower clipping level is set by the output of the Control Gate Amplifier in A1A2. The clipped sine-wave signal is coupled to the control grid circuit through C5, where it is rectified by CR3 and CR4 to generate a dc bias voltage across R7. C6, R10, and C7 are a filter to remove ripple from the bias voltage. C7 also allows fast pulse signals to be coupled directly to the control grid, to maintain response times of 30 nsec or less.

Focus Grid Charge Level Shift (D)

The focus voltage is set by a resistive divider string from the cathode, with an intensity-focus correction bias developed in a manner similar to that of the control grid bias voltage described above. FOCUS LIMIT potentiometer R14 sets the focus grid to approximately −2500 Vdc, and the focus bias is generated by a clipped sine wave at the junction of C9 and C10. This upper clipping level is set by VR2 (+82.5V), and the lower clipping level is set by the FOCUS GATE voltage from A1A2.

TABLE 1. A1A3, REPLACEABLE PARTS

Reference Designation	HP Part Number	C D	Qty	Description	Mfr Code	Mfr Part Number
A1A3	85662-60059	9	1	BOARD ASSEMBLY, HIGH VOLTAGE REGULATOR	28480	85662-60059
A1A3C1	0160-4148	5	2	CAPACITOR-FXD .033UF +-20% 6KVDC	56289	430P333060
A1A3C2	0160-2264	2	2	CAPACITOR-FXD 20PF +-5% 500VDC CER 0+-30	28480	0160-2264
A1A3C3	0160-4148	5		CAPACITOR-FXD .033UF +-20% 6KVDC	56289	430P333060
A1A3C4	0160-3960	7	2	CAPACITOR-FXD 1000PF +-20% 8KVDC	28480	0160-3960
A1A3C5	0160-3960	7		CAPACITOR-FXD 1000PF +-20% 8KVDC	28480	0160-3960
A1A3C6	0160-0678	8	2	CAPACITOR-FXD .01UF +-20% 6KVDC	28480	0160-0678
A1A3C7	0160-0678	8		CAPACITOR-FXD .01UF +-20% 6KVDC	28480	0160-0678
A1A3C8	0160-0543	6	4	CAPACITOR-FXD 4700PF +-20% 4KVDC	28480	0160-0543
A1A3C9	0160-2264	2		CAPACITOR-FXD 20PF +-5% 500VDC CER 0+-30	28480	0160-2264
A1A3C10	0160-0543	6		CAPACITOR-FXD 4700PF +-20% 4KVDC	28480	0160-0543
A1A3C11	0160-0543	6		CAPACITOR-FXD 4700PF +-20% 4KVDC	28480	0160-0543
A1A3C12	0160-3456	6	1	CAPACITOR-FXD 1000PF +-10% 1KVDC CER	28480	0160-3456
A1A3C13	0160-0543	6		CAPACITOR-FXD 4700PF +-20% 4KVDC	28480	0160-0543
A1A3C14	0180-0269	5	1	CAPACITOR-FXD 1UF+50-10% 150VDC AL	56289	30D105G150BA2
A1A3CR1	1901-0683	8	1	DIODE-HV RECT 10KV 5MA 250NS	28480	1901-0683
A1A3CR2	1901-0028	5	8	DIODE-PWR RECT 400V 750MA DO-29	28480	1901-0028
A1A3CR3	1901-0028	5		DIODE-PWR RECT 400V 750MA DO-29	28480	1901-0028
A1A3CR4	1901-0028	5		DIODE-PWR RECT 400V 750MA DO-29	28480	1901-0028
A1A3CR5	1901-0028	5		DIODE-PWR RECT 400V 750MA DO-29	28480	1901-0028
A1A3CR6	1901-0028	5		DIODE-PWR RECT 400V 750MA DO-29	28480	1901-0028
A1A3CR7	1901-0028	5		DIODE-PWR RECT 400V 750MA DO-29	28480	1901-0028
A1A3CR8	1901-0028	5		DIODE-PWR RECT 400V 750MA DO-29	28480	1901-0028
A1A3CR9	1901-0028	5		DIODE-PWR RECT 400V 750MA DO-29	28480	1901-0028
A1A3R1	0698-8737	5	1	RESISTOR 100K 5% .25W CC TC=-400/+800	28480	0698-8737
A1A3R2	0687-3941	0	2	RESISTOR 390K 10% .5W CC TC=0+882	01121	EB3941
A1A3R3	0687-4721	6	1	RESISTOR 4.7K 10% .5W CC TC=0+647	01121	EB4721
A1A3R4	0698-8018	5	1	RESISTOR 30M 1% 3W C TC=0+-100	03888	PVC175-3-TO-3004-F
A1A3R5	0698-8777	3	6	RESISTOR 1K 5% .25W CC TC=-400/+900	28480	0698-8777
A1A3R6	0698-8777	3		RESISTOR 1K 5% .25W CC TC=-400/+900	28480	0698-8777
A1A3R7	0686-1065	3	2	RESISTOR 10M 5% .5W CC TC=0+1059	01121	EB1065
A1A3R8	0698-8777	3		RESISTOR 1K 5% .25W CC TC=-400/+900	28480	0698-8777
A1A3R9	0698-8777	3		RESISTOR 1K 5% .25W CC TC=-400/+900	28480	0698-8777
A1A3R10	0699-1064	9	2	RESISTOR 1M 5% .25W CC TC=-600/+900	28480	0699-1064
A1A3R11	0687-2221	7	1	RESISTOR 2.2K 10% .5W CC TC=0+647	01121	EB2221
A1A3R12	0687-1001	9	1	RESISTOR 10 10% .5W CC TC=0+412	01121	EB1001
A1A3R13	0698-8992	4	1	RESISTOR 8M 2% 1W C TC=0+-250	28480	0698-8992
A1A3R14	2100-3626	8	1	RESISTOR-TRMR 2M 20% C SIDE-ADJ 1-TRN	73138	72XR2M
A1A3R15	0698-8993	5	1	RESISTOR 14M 2% 1W C TC=0+-250	28480	0698-8993
A1A3R16	0698-8768	2	1	RESISTOR 100 5% .25W CC TC=-400/+500	28480	0698-8768
A1A3R17	0687-3941	0		RESISTOR 390K 10% .5W CC TC=0+882	01121	EB3941
A1A3R18	0699-1065	0	1	RESISTOR 10K 5% .25W CC TC=-400/+700	28480	0699-1065
A1A3R19	0686-1065	3		RESISTOR 10M 5% .5W CC TC=0+1059	01121	EB1065
A1A3R20	0698-8777	3		RESISTOR 1K 5% .25W CC TC=-400/+900	28480	0698-8777
A1A3R21	0698-8777	3		RESISTOR 1K 5% .25W CC TC=-400/+900	28480	0698-8777
A1A3R22	0699-1064	9		RESISTOR 1M 5% .25W CC TC=-600/+900	28480	0699-1064
A1A3R23	0687-2231	9	1	RESISTOR 22K 10% .5W CC TC=0+765	01121	EB2231
A1A3R24	0687-6801	7	1	RESISTOR 68 10% .5W CC TC=0+412	01121	EB6801
A1A3T1	01332-61106	4	1	XFMR AY-HV	28480	01332-61106
A1A3TP1- A1A3TP3				NOT ASSIGNED		
A1A3TP4	0360-0535	0	2	TERMINAL TEST POINT PCB	00000	ORDER BY DESCRIPTION
A1A3TP5	0360-0535	0		TERMINAL TEST POINT PCB	00000	ORDER BY DESCRIPTION
A1A3V1	2140-0018	0	2	LAMP-GLOW A9A-CT 90VDC 700UA T-2-BULB	00471	A9A-CT
A1A3V2	2140-0018	0		LAMP-GLOW A9A-CT 90VDC 700UA T-2-BULB	00471	A9A-CT
A1A3VR1	1902-0182	4	1	DIODE-ZNR 20.5V 5% DO-35 PD=.4W	28480	1902-0182
A1A3VR2	1902-0197	1	1	DIODE-ZNR 82V 5% PD=1W IR=5UA	28480	1902-0197
				MISCELLANEOUS PARTS		
	85662-00068	4	1	SUPPORT BRACKET	28480	85662-00068

CRT REPLACEMENT

REMOVAL

1. Remove feet (1) from rear of instrument by removing screws (2) shown in View A. Remove feet (3) by removing screws (4) and loosening thumbscrews (5).

2. Separate instruments by holding RF Section in place and pulling forward toward front panel on IF-Display Section.

3. When instruments have been seaparated, remove top cover form IF-Diaplay Section by loosening screw (6) and remove bottom cover by loosening screw (7).

4. Turn instrument upside down as shown in View B. Disconnect wire (8) ACC and wire (9) MESH from neck of CRT. Disconnect wires (10) TA and wires (11) ORTHO from A1A10 Motherboard.

5. Turn instrument over as shown in View C. Unplug high voltage cable at connector (12). Remove wires (13) from neck of CRT, noting location of connections for reconnection to new CRT.

6. Loosen two screws (14) in CRT clamp. (It is not necessary to remove these screws; CRT can be removed if they have been loosened.) It may be necessary to remove cover (15) by removing screws (16) to gain access to clamp screw (14) next to cover.

7. CRT is now loose and can be removed. It is necessary to remove the front panel to remove the CRT from the instrument. Refer to Figure 2 of the A1A1/A1A2 assemblies tab for the procedure to remove the front panel.

8. When front panel has been removed, pull CRT out through front of instrument far enough to allow room at rear of CRT to disconnect plug (17) from socket at rear of CRT.

9. When cable has been disconnected from rear of CRT, tube can be removed from instrument by pulling it out through front of instrument.

10. Remove CRT shield from tube by first removing foam spacer at rear of shield between tube socket and shield, then pull tube out of shield.

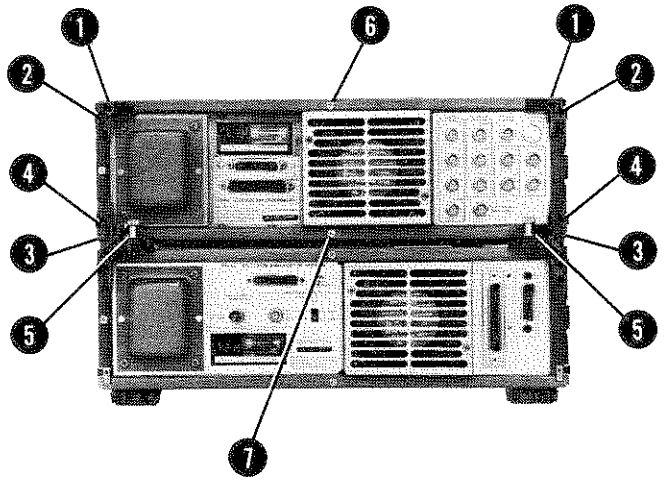

View A

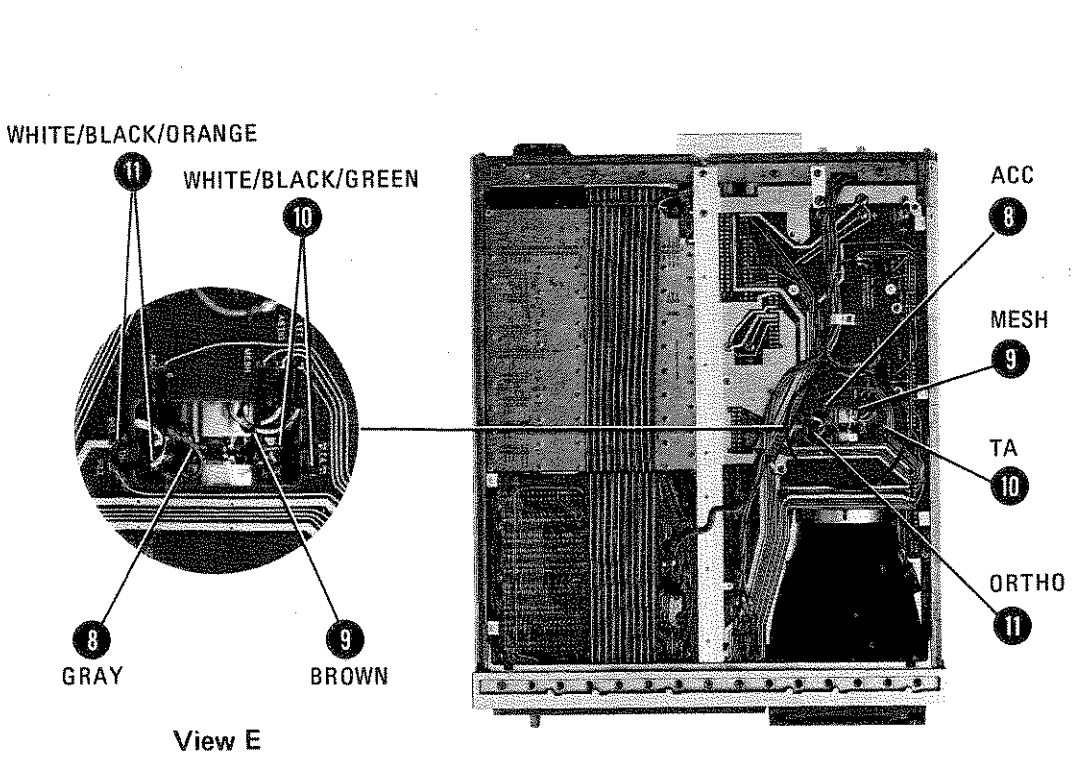

View E

View B

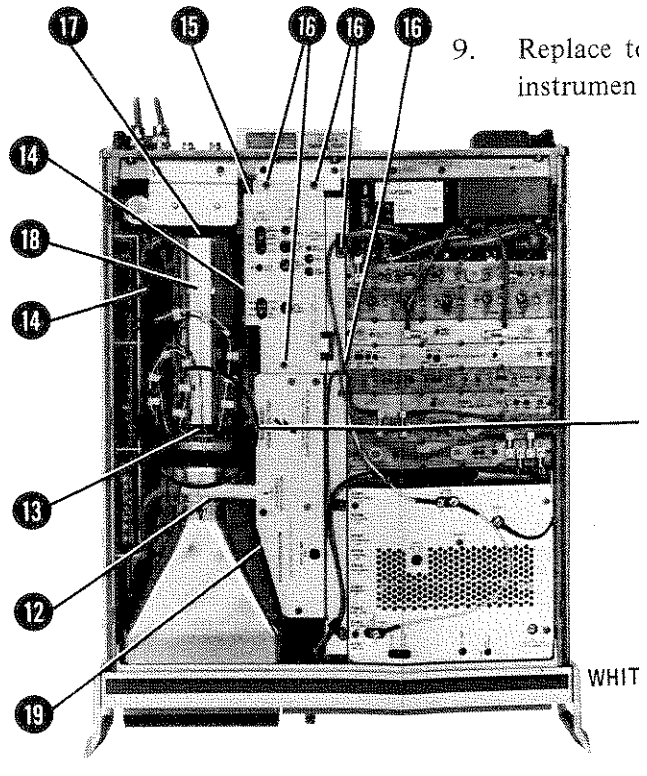

View C

1. Install CR

2. Insert new through cl strip on si

3. Reconnect

4. Replace fr

5. Pull forw mated wit

6. Replace c

7. Connect v nector (12

8. Turn instr CRT and v

9. Replace t instrumen

CRT REPLACEMENT

INSTALLATION

1. Install CRT shield on new CRT and insert foam spacer at rear of shield.

2. Insert new CRT into instrument through front panel frame so that rear of tube passes through clamp (18). Make sure grounding strap (19) makes contact with conductive strip on side of CRT. (Refer to View C.)

3. Reconnect plug (17) to socket at rear of new CRT. (Refer to View C.)

4. Replace front panel. Refer to Figure 2 of the A1A1/A1A2 assemblies tab, if necessary.

5. Pull forward towards front panel on rear of CRT to ensure that CRT is properly mated with front panel and then tighten screws (14) in clamp (18). (Refer to View C.)

6. Replace cover (15) and install screws (16) if they were removed during removal of CRT.

7. Connect wires (13) to neck of CRT and connect high voltage cable to CRT at connector (12). (Refer to Views C and D.)

8. Turn instrument over as shown in View B and connect wires (8) and (9) to neck of CRT and wires (10) and (11) to A1A10 Motherboard. (Refer to View E.)

9. Replace top and bottom covers on instrument, install feet (1) and (2), and join instruments together as shown in View A by tightening thumbscrews (5).

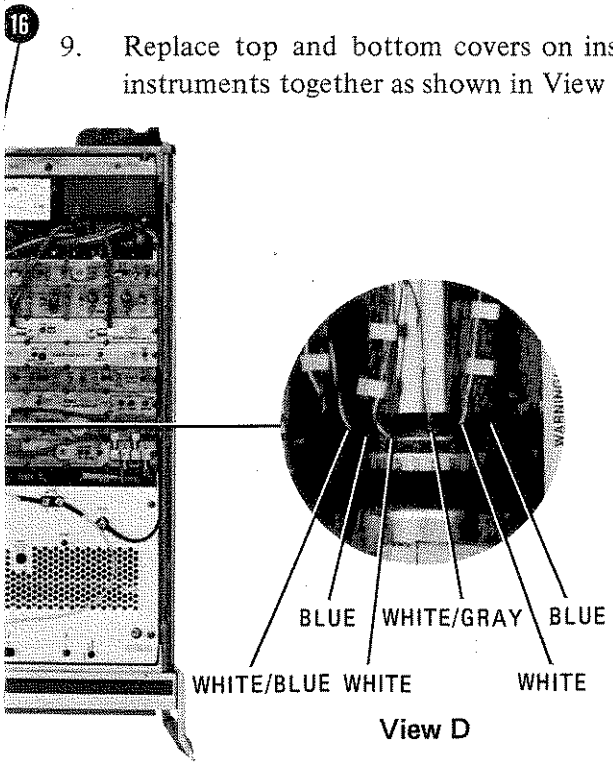

View D

FIGURE 1. CATHODE RAY TUBE (CRT) REPLACEMENT

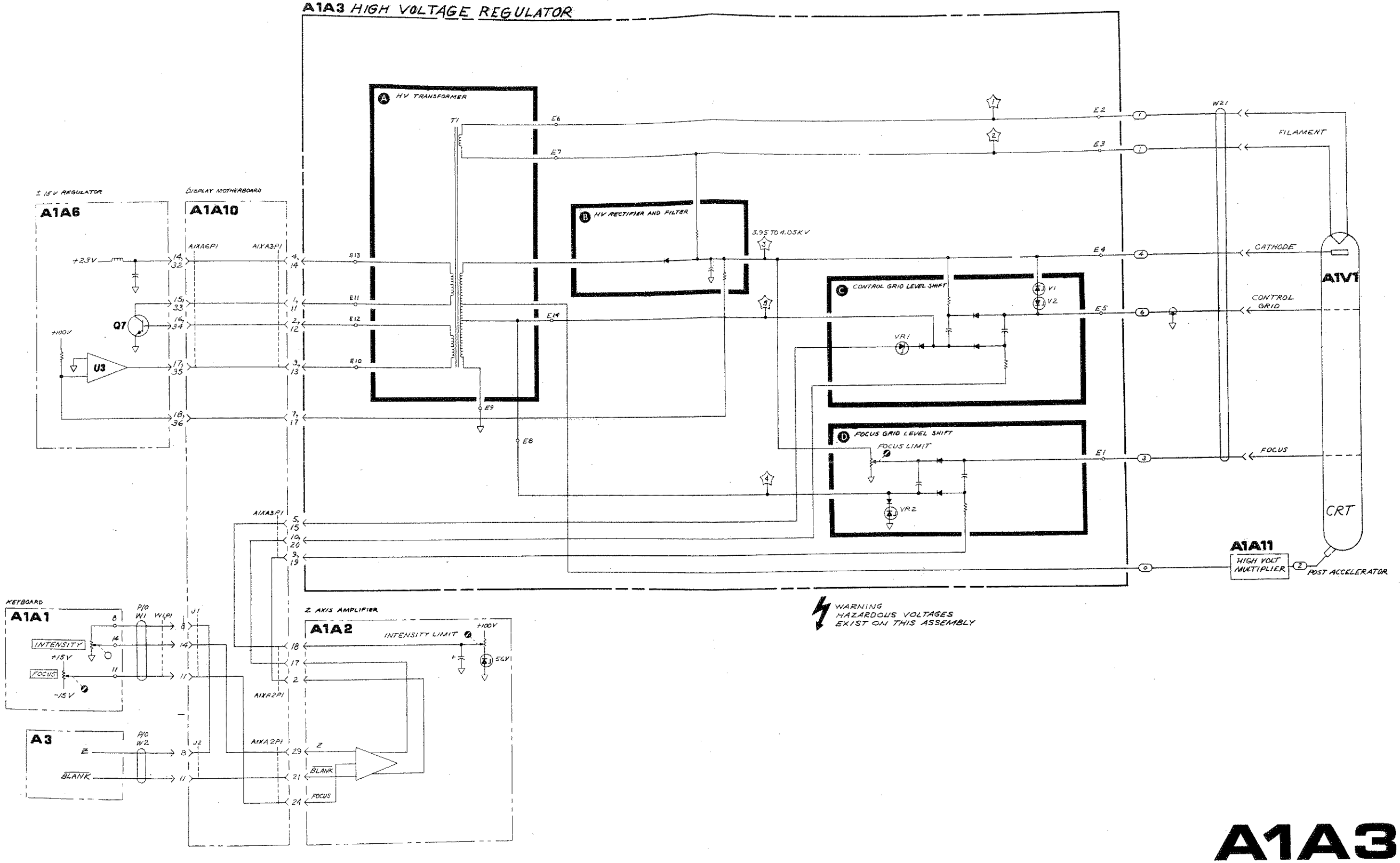

A1A3

FIGURE 2. A1A3 HIGH VOLTAGE REGULATOR, BLOCK DIAGRAM

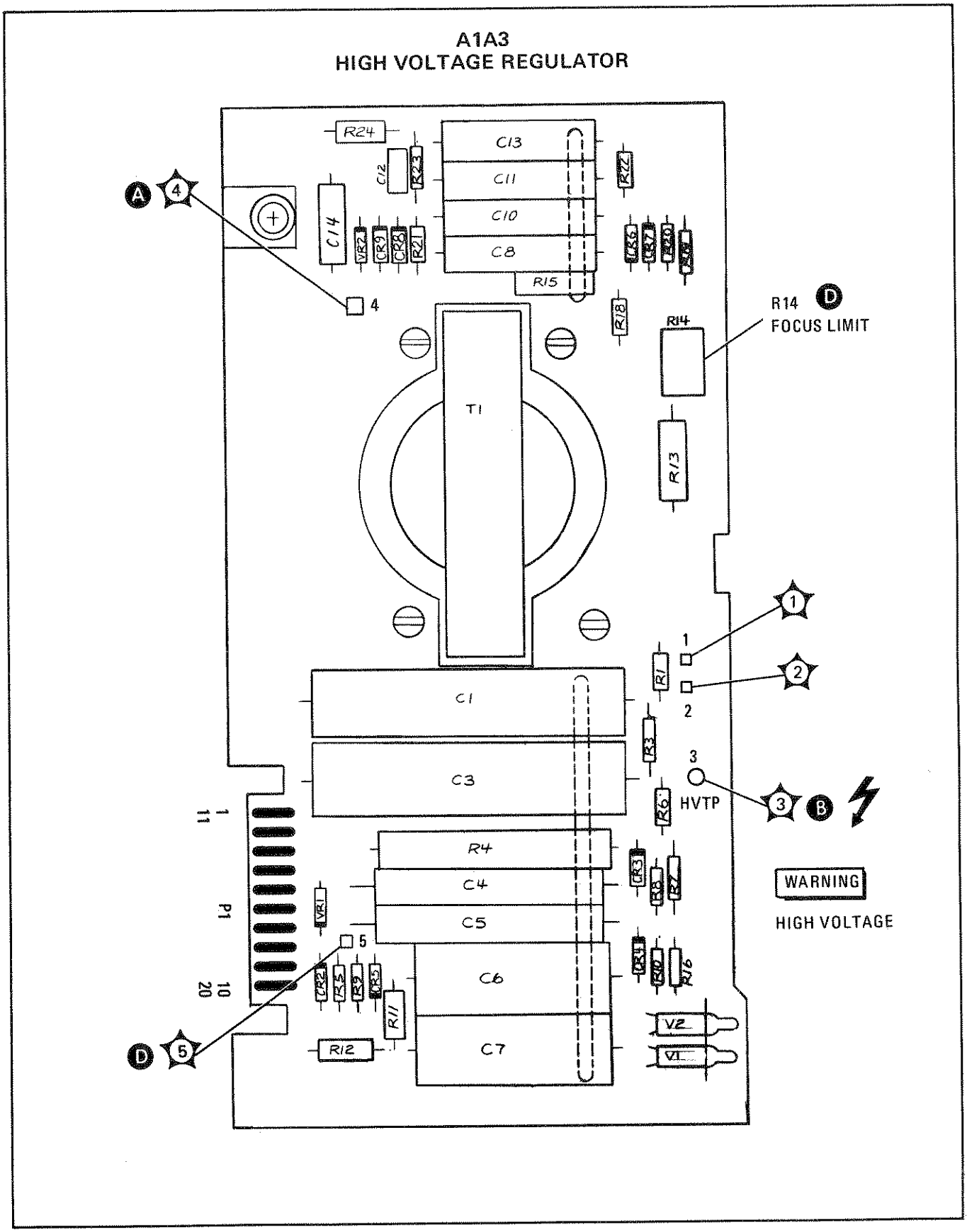

FIGURE 3. A1A3 HIGH VOLTAGE REGULATOR, COMPONENT LOCATIONS

A1A3 HIGH VOLTAGE REGULATOR
85662-60059

SIGNAL	TO/FROM	FUNCTION BLOCK
COLLECTOR	A1A6 ±15V REGULATOR	A
BASE	A1A6 ±15V REGULATOR	A
OSCILLATOR DRIVE	A1A6 ±15V REGULATOR	A
+23VF	A1A6 ±15V REGULATOR	A
INTENSITY LIMIT	A1A2 Z-AXIS	C
GND		A
GND		A
HV FEEDBACK	A1A6 ±15V REGULATOR	B
GND		A
GND		A
FOCUS GATE	A1A2 Z-AXIS	D
CONTROL GATE	A1A2 Z-AXIS	C

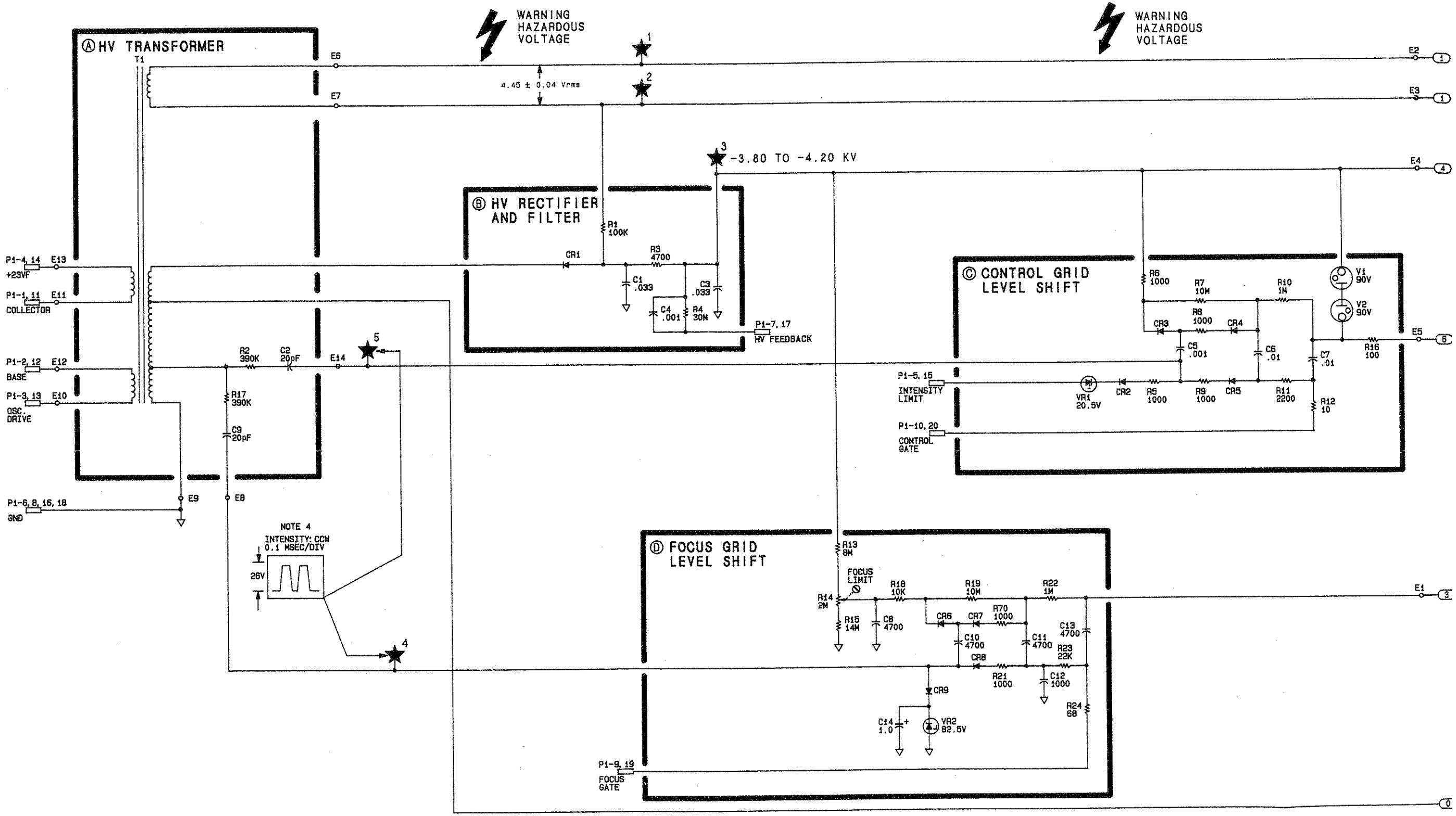

SERIAL PREFIX: 2403A

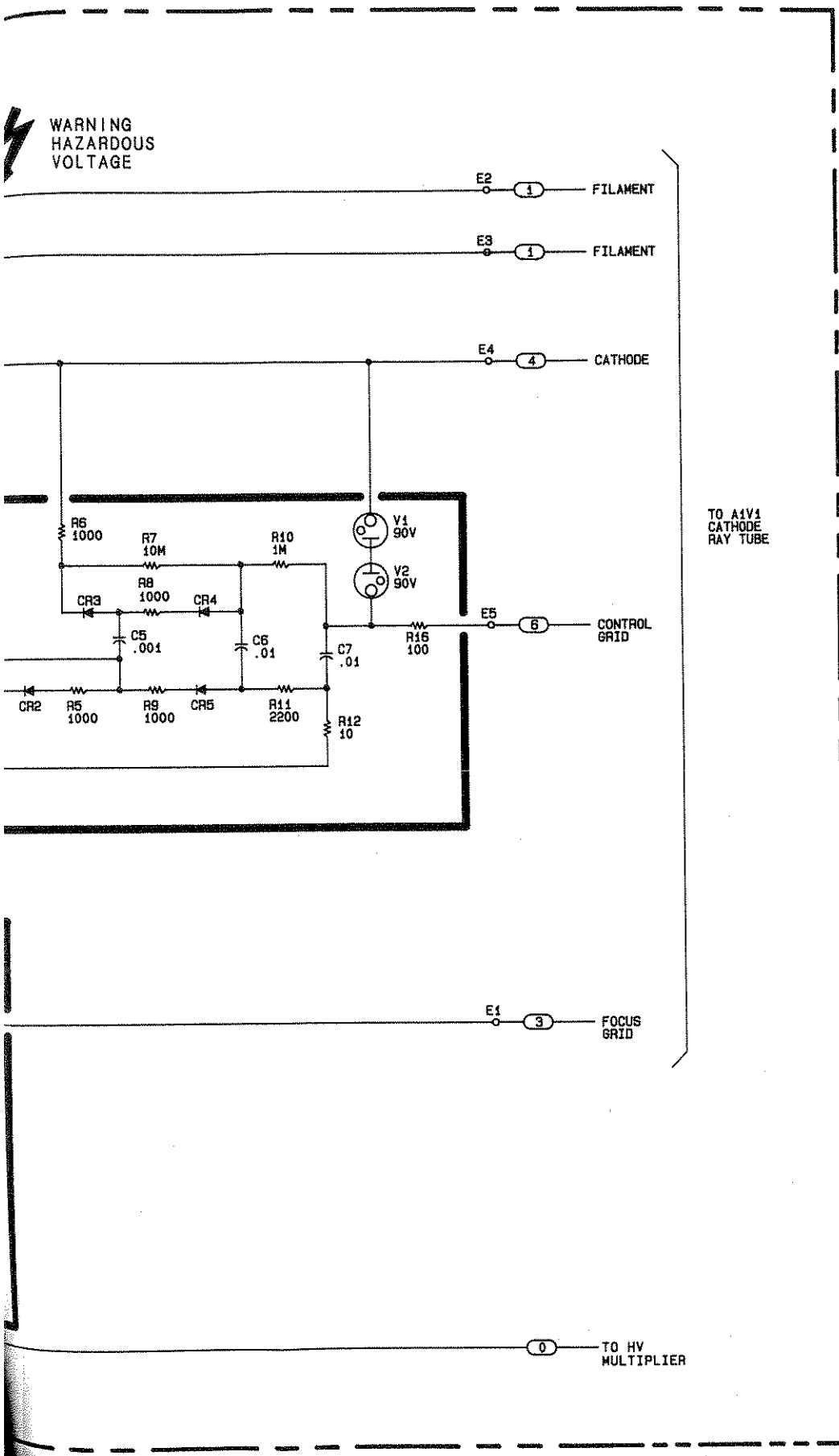

NOTES:

1. REFERENCE DESIGNATORS WITHIN THIS ASSEMBLY ARE ABBREVIATED. FOR COMPLETE REFERENCE DESIGNATION, PREFIX ABBREVIATION WITH ASSEMBLY DESIGNATION.
2. UNLESS OTHERWISE INDICATED: RESISTANCE IS IN OHMS (Ω) CAPACITANCE IS IN MICROFARADS (μF) INDUCTANCE IS IN MICROHENRIES (μH)
3. UNLESS OTHERWISE INDICATED: SIGNALS ENTER AT LEFT SIDE OR TOP AND EXIT AT RIGHT SIDE OR BOTTOM OF FUNCTION BLOCKS.
4. BECAUSE TP4 AND TP5 ARE DIFFICULT TO REACH: USE CAUTION WHEN MAKING MEASUREMENTS AT THESE POINTS.

A1A3

FIGURE 4. A1A3 HIGH VOLTAGE REGULATOR, SCHEMATIC DIAGRAM

A1A4
A1A5 X AND Y DEFLECTION AMPLIFIERS, CIRCUIT DESCRIPTION

A1A4 X Deflection Amplifier and A1A5 Y Deflection Amplifier each consists of a differential input state (Q10, Q15) with current source Q11, two current gain stages (Q9, Q14 and Q8, Q13), and two output differential current-to-voltage amplifiers. A display output amplifier provides rear-panel X and Y DISPLAY OUTPUTS.

Current Amplifier (B)

The Current Amplifier transforms an input voltage change to a differential current change at the collectors of Q10 and Q15. This change is amplified in the following current gain stages Q9 and Q14. POSN adjust R7 sets the CRT trace position, and GAIN adjust R27 sets the CRT trace deflection limits.

The collectors of Q8 and Q13 are virtual-ground, current-summing junctions of the output amplifiers. When a signal is applied so as to increase the current in Q8 (decrease in Q13) Q5 conducts more, turning off Q2 and causing the output (collector of Q2) to rise. Current feedback through R29 supplies the increase in current required by Q8. The analogous operation, with inverted polarity, occurs in the other output amplifier.

Current to Voltage Amplifiers (C) (D)

Emitter followers Q7 and Q12 are feedforward amplifiers, coupling the drive signal directly to the bases of Q1 and Q4, thus improving the frequency response. Trimmer capacitors C10 and C11, along with HF GAIN potentiometer R28, adjust the amplifier frequency response for minimum overshoot and equal risetimes (≈70 nsec).

An input signal of 0 to 2V peak will cause a beam deflection equal to the length of the graticule lines.

Display Output (A)

Display output amplifier U1 provides a 1V maximum rear-panel signal to the X and Y DISPLAY OUTPUTS.

TABLE 1. A1A4, REPLACEABLE PARTS (1 OF 2)

Reference Designation	HP Part Number	C D	Qty	Description	Mfr Code	Mfr Part Number
A1A4	85662-60057	7	1	BOARD ASSEMBLY, X-DEFLECTION AMPLIFIER	28480	85662-60057
A1A4C1	0180-0374	3	2	CAPACITOR-FXD 10UF+-10% 20VDC TA	56289	150D106X9020B2
A1A4C2	0180-0374	3		CAPACITOR-FXD 10UF+-10% 20VDC TA	56289	150D106X9020B2
A1A4C3	0160-4084	8	6	CAPACITOR-FXD .1UF +-20% 50VDC CER	28480	0160-4084
A1A4C4	0160-4084	8		CAPACITOR-FXD .1UF +-20% 50VDC CER	28480	0160-4084
A1A4C5	0160-4084	8		CAPACITOR-FXD .1UF +-20% 50VDC CER	28480	0160-4084
A1A4C6	0160-4084	8		CAPACITOR-FXD .1UF +-20% 50VDC CER	28480	0160-4084
A1A4C7	0160-3670	6	3	CAPACITOR-FXD .1UF +-20% 200VDC CER	28480	0160-3670
A1A4C8	0160-4084	8		CAPACITOR-FXD .1UF +-20% 50VDC CER	28480	0160-4084
A1A4C9	0160-3533	0	1	CAPACITOR-FXD 470PF +-5% 300VDC MICA	28480	0160-3533
A1A4C10	0121-0474	0	2	CAPACITOR-V TRMR-PSTN .3-1.5PF 600V	28480	0121-0474
A1A4C11	0121-0474	0		CAPACITOR-V TRMR-PSTN .3-1.5PF 600V	28480	0121-0474
A1A4C12	0160-4182	7	4	CAPACITOR-FXD .01UF +-20% 200VDC CER	72982	8121-M200-X7R-103M
A1A4C13	0160-4182	7		CAPACITOR-FXD .01UF +-20% 200VDC CER	72982	8121-M200-X7R-103M
A1A4C14	0160-4182	7		CAPACITOR-FXD .01UF +-20% 200VDC CER	72982	8121-M200-X7R-103M
A1A4C15	0160-4182	7		CAPACITOR-FXD .01UF +-20% 200VDC CER	72982	8121-M200-X7R-103M
A1A4C16	0160-3670	6		CAPACITOR-FXD .1UF +-20% 200VDC CER	28480	0160-3670
A1A4C17	0160-3670	6		CAPACITOR-FXD .1UF +-20% 200VDC CER	28480	0160-3670
A1A4C18	0160-4084	8		CAPACITOR-FXD .1UF +-20% 50VDC CER	28480	0160-4084
A1A4CR1	1901-0040	1	2	DIODE-SWITCHING 30V 50MA 2NS DO-35	28480	1901-0040
A1A4CR2	1901-0040	1		DIODE-SWITCHING 30V 50MA 2NS DO-35	28480	1901-0040
A1A4L1	9140-0210	1	3	INDUCTOR RF-CH-MLD 100UH 5% .166DX.385LG	28480	9140-0210
A1A4L2	9140-0210	1		INDUCTOR RF-CH-MLD 100UH 5% .166DX.385LG	28480	9140-0210
A1A4L3	9140-0210	1		INDUCTOR RF-CH-MLD 100UH 5% .166DX.385LG	28480	9140-0210
A1A4Q1	1853-0232	0	2	TRANSISTOR PNP SI TO-39 PD=1W FT=200MHZ	28480	1853-0232
A1A4Q2	1854-0523	4	2	TRANSISTOR NPN SI TO-39 PD=1W FT=150MHZ	28480	1854-0523
A1A4Q3	1854-0523	4		TRANSISTOR NPN SI TO-39 PD=1W FT=150MHZ	28480	1854-0523
A1A4Q4	1853-0232	0		TRANSISTOR PNP SI TO-39 PD=1W FT=200MHZ	28480	1853-0232
A1A4Q5	1853-0007	7	7	TRANSISTOR PNP 2N3251 SI TO-18 PD=360MW	04713	2N3251
A1A4Q6	1853-0007	7		TRANSISTOR PNP 2N3251 SI TO-18 PD=360MW	04713	2N3251
A1A4Q7	1854-0404	0	4	TRANSISTOR NPN SI TO-18 PD=360MW	28480	1854-0404
A1A4Q8	1854-0404	0		TRANSISTOR NPN SI TO-18 PD=360MW	28480	1854-0404
A1A4Q9	1853-0007	7		TRANSISTOR PNP 2N3251 SI TO-18 PD=360MW	04713	2N3251
A1A4Q10	1853-0007	7		TRANSISTOR PNP 2N3251 SI TO-18 PD=360MW	04713	2N3251
A1A4Q11	1853-0007	7		TRANSISTOR PNP 2N3251 SI TO-18 PD=360MW	04713	2N3251
A1A4Q12	1854-0404	0		TRANSISTOR NPN SI TO-18 PD=360MW	28480	1854-0404
A1A4Q13	1854-0404	0		TRANSISTOR NPN SI TO-18 PD=360MW	28480	1854-0404
A1A4Q14	1853-0007	7		TRANSISTOR PNP 2N3251 SI TO-18 PD=360MW	04713	2N3251
A1A4Q15	1853-0007	7		TRANSISTOR PNP 2N3251 SI TO-18 PD=360MW	04713	2N3251
A1A4R1	0757-0438	3	3	RESISTOR 5.11K 1% .125W F TC=0+-100	24546	C4-1/8-T0-5111-F
A1A4R2	0757-0394	0	3	RESISTOR 51.1 1% .125W F TC=0+-100	24546	C4-1/8-T0-51R1-F
A1A4R3	0698-3150	6	2	RESISTOR 2.37K 1% .125W F TC=0+-100	24546	C4-1/8-T0-2371-F
A1A4R4	0698-3150	6		RESISTOR 2.37K 1% .125W F TC=0+-100	24546	C4-1/8-T0-2371-F
A1A4R5	0698-3155	1	2	RESISTOR 4.64K 1% .125W F TC=0+-100	24546	C4-1/8-T0-4641-F
A1A4R6	0757-0394	0		RESISTOR 51.1 1% .125W F TC=0+-100	24546	C4-1/8-T0-51R1-F
A1A4R7	2100-3353	8	1	RESISTOR-TRMR 20K 10% C SIDE-ADJ 1-TRN	28480	2100-3353
A1A4R8	0757-0401	0	4	RESISTOR 100 1% .125W F TC=0+-100	24546	C4-1/8-T0-101-F
A1A4R9	0757-0401	0		RESISTOR 100 1% .125W F TC=0+-100	24546	C4-1/8-T0-101-F
A1A4R10	0757-0401	0		RESISTOR 100 1% .125W F TC=0+-100	24546	C4-1/8-T0-101-F
A1A4R11	0757-0401	0		RESISTOR 100 1% .125W F TC=0+-100	24546	C4-1/8-T0-101-F
A1A4R12	0757-0428	1	2	RESISTOR 1.62K 1% .125W F TC=0+-100	24546	C4-1/8-T0-1621-F
A1A4R13	0757-0428	1		RESISTOR 1.62K 1% .125W F TC=0+-100	24546	C4-1/8-T0-1621-F
A1A4R14	0757-0440	7	1	RESISTOR 7.5K 1% .125W F TC=0+-100	24546	C4-1/8-T0-7501-F
A1A4R15	0757-0444	1	1	RESISTOR 12.1K 1% .125W F TC=0+-100	24546	C4-1/8-T0-1212-F
A1A4R16	0698-0084	9	4	RESISTOR 2.15K 1% .125W F TC=0+-100	24546	C4-1/8-T0-2151-F
A1A4R17	0698-0084	9		RESISTOR 2.15K 1% .125W F TC=0+-100	24546	C4-1/8-T0-2151-F
A1A4R18	0698-0084	9		RESISTOR 2.15K 1% .125W F TC=0+-100	24546	C4-1/8-T0-2151-F
A1A4R19	0698-0084	9		RESISTOR 2.15K 1% .125W F TC=0+-100	24546	C4-1/8-T0-2151-F
A1A4R20	0698-3155	1		RESISTOR 4.64K 1% .125W F TC=0+-100	24546	C4-1/8-T0-4641-F
A1A4R21	0757-1094	9	1	RESISTOR 1.47K 1% .125W F TC=0+-100	24546	C4-1/8-T0-1471-F
A1A4R22	0757-0460	1	2	RESISTOR 61.9K 1% .125W F TC=0+-100	24546	C4-1/8-T0-6192-F
A1A4R23	0757-0460	1		RESISTOR 61.9K 1% .125W F TC=0+-100	24546	C4-1/8-T0-6192-F
A1A4R24	0698-3153	9	3	RESISTOR 3.83K 1% .125W F TC=0+-100	24546	C4-1/8-T0-3831-F
A1A4R25	0698-3153	9		RESISTOR 3.83K 1% .125W F TC=0+-100	24546	C4-1/8-T0-3831-F
A1A4R26	0757-0421	4	1	RESISTOR 825 1% .125W F TC=0+-100	24546	C4-1/8-T0-825R-F
A1A4R27	2100-3273	1	2	RESISTOR-TRMR 2K 10% C SIDE-ADJ 1-TRN	28480	2100-3273
A1A4R28	2100-3273	1		RESISTOR-TRMR 2K 10% C SIDE-ADJ 1-TRN	28480	2100-3273
A1A4R29	0698-3415	6	2	RESISTOR 19.6K 1% .5W F TC=0+-100	28480	0698-3415
A1A4R30	0698-3415	6		RESISTOR 19.6K 1% .5W F TC=0+-100	28480	0698-3415
A1A4R31	0757-0439	4	2	RESISTOR 6.81K 1% .125W F TC=0+-100	24546	C4-1/8-T0-6811-F
A1A4R32	0757-0439	4		RESISTOR 6.81K 1% .125W F TC=0+-100	24546	C4-1/8-T0-6811-F
A1A4R33	0757-0438	3		RESISTOR 5.11K 1% .125W F TC=0+-100	24546	C4-1/8-T0-5111-F
A1A4R34	0757-0438	3		RESISTOR 5.11K 1% .125W F TC=0+-100	24546	C4-1/8-T0-5111-F
A1A4R35	0757-0851	4	2	RESISTOR 43.2K 1% .5W F TC=0+-100	28480	0757-0851

TABLE 1. A1A4, REPLACEABLE PARTS (2 OF 2)

Reference Designation	HP Part Number	C D	Qty	Description	Mfr Code	Mfr Part Number
A1A4R36	0757-0851	4		RESISTOR 43.2K 1% .5W F TC=0+-100	28480	0757-0851
A1A4R37	0757-0346	2	4	RESISTOR 10 1% .125W F TC=0+-100	24546	C4-1/8-T0-10R0-F
A1A4R38	0757-0346	2		RESISTOR 10 1% .125W F TC=0+-100	24546	C4-1/8-T0-10R0-F
A1A4R39	0757-0346	2		RESISTOR 10 1% .125W F TC=0+-100	24546	C4-1/8-T0-10R0-F
A1A4R40	0757-0346	2		RESISTOR 10 1% .125W F TC=0+-100	24546	C4-1/8-T0-10R0-F
A1A4R41	0757-0873	0	2	RESISTOR 1.62K 1% .5W F TC=0+-100	28480	0757-0873
A1A4R42	0757-0873	0		RESISTOR 1.62K 1% .5W F TC=0+-100	28480	0757-0873
A1A4R43	0698-3153	9		RESISTOR 3.83K 1% .125W F TC=0+-100	24546	C4-1/8-T0-3831-F
A1A4R44	0757-0394	0		RESISTOR 51.1 1% .125W F TC=0+-100	24546	C4-1/8-T0-51R1-F
A1A4TP1	0360-0535	0	3	TERMINAL TEST POINT PCB	00000	ORDER BY DESCRIPTION
A1A4TP2	0360-0535	0		TERMINAL TEST POINT PCB	00000	ORDER BY DESCRIPTION
A1A4TP3	0360-0535	0		TERMINAL TEST POINT PCB	00000	ORDER BY DESCRIPTION
A1A4U1	1826-0021	8	1	IC OP AMP GP TO-99 PKG	27014	LM310H
				MISCELLANEOUS PARTS		
	5040-6843	2	1	EXTRACTOR	28480	5040-6843
	1205-0095	0	4	HEAT SINK	30161	3225B

TABLE 2. A1A5, REPLACEABLE PARTS (1 OF 2)

Reference Designation	HP Part Number	C D	Qty	Description	Mfr Code	Mfr Part Number
A1A5	85662-60057	7	1	BOARD AMPLIFIER, Y-DEFLECTION AMPLIFIER	28480	85662-60057
A1A5C1	0180-0374	3	2	CAPACITOR-FXD 10UF+-10% 20VDC TA	56289	150D106X9020B2
A1A5C2	0180-0374	3		CAPACITOR-FXD 10UF+-10% 20VDC TA	56289	150D106X9020B2
A1A5C3	0160-4084	8	6	CAPACITOR-FXD .1UF +-20% 50VDC CER	28480	0160-4084
A1A5C4	0160-4084	8		CAPACITOR-FXD .1UF +-20% 50VDC CER	28480	0160-4084
A1A5C5	0160-4084	8		CAPACITOR-FXD .1UF +-20% 50VDC CER	28480	0160-4084
A1A5C6	0160-4084	8		CAPACITOR-FXD .1UF +-20% 50VDC CER	28480	0160-4084
A1A5C7	0160-3670	6	3	CAPACITOR-FXD .1UF +-20% 200VDC CER	28480	0160-3670
A1A5C8	0160-4084	8		CAPACITOR-FXD .1UF +-20% 50VDC CER	28480	0160-4084
A1A5C9	0160-3533	0	1	CAPACITOR-FXD 470PF +-5% 300VDC MICA	28480	0160-3533
A1A5C10	0121-0474	8	2	CAPACITOR-V TRMR-PSTN .3-1.5PF 600V	28480	0121-0474
A1A5C11	0121-0474	8		CAPACITOR-V TRMR-PSTN .3-1.5PF 600V	28480	0121-0474
A1A5C12	0160-4182	7	4	CAPACITOR-FXD .01UF +-20% 200VDC CER	72982	8121-M200-X7R-103M
A1A5C13	0160-4182	7		CAPACITOR-FXD .01UF +-20% 200VDC CER	72982	8121-M200-X7R-103M
A1A5C14	0160-4182	7		CAPACITOR-FXD .01UF +-20% 200VDC CER	72982	8121-M200-X7R-103M
A1A5C15	0160-4182	7		CAPACITOR-FXD .01UF +-20% 200VDC CER	72982	8121-M200-X7R-103M
A1A5C16	0160-3670	6		CAPACITOR-FXD .1UF +-20% 200VDC CER	28480	0160-3670
A1A5C17	0160-3670	6		CAPACITOR-FXD .1UF +-20% 200VDC CER	28480	0160-3670
A1A5C18	0160-4084	8		CAPACITOR-FXD .1UF +-20% 50VDC CER	28480	0160-4084
A1A5CR1	1901-0040	1	2	DIODE-SWITCHING 30V 50MA 2NS DO-35	28480	1901-0040
A1A5CR2	1901-0040	1		DIODE-SWITCHING 30V 50MA 2NS DO-35	28480	1901-0040
A1A5L1	9140-0210	1	3	INDUCTOR RF-CH-MLD 100UH 5% .166DX.385LG	28480	9140-0210
A1A5L2	9140-0210	1		INDUCTOR RF-CH-MLD 100UH 5% .166DX.385LG	28480	9140-0210
A1A5L3	9140-0210	1		INDUCTOR RF-CH-MLD 100UH 5% .166DX.385LG	28480	9140-0210
A1A5Q1	1853-0232	0	2	TRANSISTOR PNP SI TO-39 PD=1W FT=200MHZ	28480	1853-0232
A1A5Q2	1854-0523	4	2	TRANSISTOR NPN SI TO-39 PD=1W FT=150MHZ	28480	1854-0523
A1A5Q3	1854-0523	4		TRANSISTOR NPN SI TO-39 PD=1W FT=150MHZ	28480	1854-0523
A1A5Q4	1853-0232	0		TRANSISTOR PNP SI TO-39 PD=1W FT=200MHZ	28480	1853-0232
A1A5Q5	1853-0007	7	7	TRANSISTOR PNP 2N3251 SI TO-18 PD=360MW	04713	2N3251
A1A5Q6	1853-0007	7		TRANSISTOR PNP 2N3251 SI TO-18 PD=360MW	04713	2N3251
A1A5Q7	1854-0404	0	4	TRANSISTOR NPN SI TO-18 PD=360MW	28480	1854-0404
A1A5Q8	1854-0404	0		TRANSISTOR NPN SI TO-18 PD=360MW	28480	1854-0404
A1A5Q9	1853-0007	7		TRANSISTOR PNP 2N3251 SI TO-18 PD=360MW	04713	2N3251
A1A5Q10	1853-0007	7		TRANSISTOR PNP 2N3251 SI TO-18 PD=360MW	04713	2N3251
A1A5Q11	1853-0007	7		TRANSISTOR PNP 2N3251 SI TO-18 PD=360MW	04713	2N3251
A1A5Q12	1854-0404	0		TRANSISTOR NPN SI TO-18 PD=360MW	28480	1854-0404
A1A5Q13	1854-0404	0		TRANSISTOR NPN SI TO-18 PD=360MW	28480	1854-0404
A1A5Q14	1853-0007	7		TRANSISTOR PNP 2N3251 SI TO-18 PD=360MW	04713	2N3251
A1A5Q15	1853-0007	7		TRANSISTOR PNP 2N3251 SI TO-18 PD=360MW	04713	2N3251
A1A5R1	0757-0438	3	3	RESISTOR 5.11K 1% .125W F TC=0+-100	24546	C4-1/8-T0-5111-F
A1A5R2	0757-0394	0	3	RESISTOR 51.1 1% .125W F TC=0+-100	24546	C4-1/8-T0-51R1-F
A1A5R3	0698-3150	6	2	RESISTOR 2.37K 1% .125W F TC=0+-100	24546	C4-1/8-T0-2371-F
A1A5R4	0698-3150	6		RESISTOR 2.37K 1% .125W F TC=0+-100	24546	C4-1/8-T0-2371-F
A1A5R5	0698-3155	1	2	RESISTOR 4.64K 1% .125W F TC=0+-100	24546	C4-1/8-T0-4641-F
A1A5R6	0757-0394	0		RESISTOR 51.1 1% .125W F TC=0+-100	24546	C4-1/8-T0-51R1-F
A1A5R7	2100-3353	8	1	RESISTOR-TRMR 20K 10% C SIDE-ADJ 1-TRN	28480	2100-3353
A1A5R8	0757-0401	0	4	RESISTOR 100 1% .125W F TC=0+-100	24546	C4-1/8-T0-101-F
A1A5R9	0757-0401	0		RESISTOR 100 1% .125W F TC=0+-100	24546	C4-1/8-T0-101-F
A1A5R10	0757-0401	0		RESISTOR 100 1% .125W F TC=0+-100	24546	C4-1/8-T0-101-F
A1A5R11	0757-0401	0		RESISTOR 100 1% .125W F TC=0+-100	24546	C4-1/8-T0-101-F
A1A5R12	0757-0428	1	2	RESISTOR 1.62K 1% .125W F TC=0+-100	24546	C4-1/8-T0-1621-F
A1A5R13	0757-0428	1		RESISTOR 1.62K 1% .125W F TC=0+-100	24546	C4-1/8-T0-1621-F
A1A5R14	0757-0440	7	1	RESISTOR 7.5K 1% .125W F TC=0+-100	24546	C4-1/8-T0-7501-F
A1A5R15	0757-0444	1	1	RESISTOR 12.1K 1% .125W F TC=0+-100	24546	C4-1/8-T0-1212-F
A1A5R16	0698-0084	9	4	RESISTOR 2.15K 1% .125W F TC=0+-100	24546	C4-1/8-T0-2151-F
A1A5R17	0698-0084	9		RESISTOR 2.15K 1% .125W F TC=0+-100	24546	C4-1/8-T0-2151-F
A1A5R18	0698-0084	9		RESISTOR 2.15K 1% .125W F TC=0+-100	24546	C4-1/8-T0-2151-F
A1A5R19	0698-0084	9		RESISTOR 2.15K 1% .125W F TC=0+-100	24546	C4-1/8-T0-2151-F
A1A5R20	0698-3155	1		RESISTOR 4.64K 1% .125W F TC=0+-100	24546	C4-1/8-T0-4641-F
A1A5R21	0757-1094	9	1	RESISTOR 1.47K 1% .125W F TC=0+-100	24546	C4-1/8-T0-1471-F
A1A5R22	0757-0460	1	2	RESISTOR 61.9K 1% .125W F TC=0+-100	24546	C4-1/8-T0-6192-F
A1A5R23	0757-0460	1		RESISTOR 61.9K 1% .125W F TC=0+-100	24546	C4-1/8-T0-6192-F
A1A5R24	0698-3153	9	3	RESISTOR 3.83K 1% .125W F TC=0+-100	24546	C4-1/8-T0-3831-F
A1A5R25	0698-3153	9		RESISTOR 3.83K 1% .125W F TC=0+-100	24546	C4-1/8-T0-3831-F
A1A5R26	0757-0421	4	1	RESISTOR 825 1% .125W F TC=0+-100	24546	C4-1/8-T0-825R-F
A1A5R27	2100-3273	1	2	RESISTOR-TRMR 2K 10% C SIDE-ADJ 1-TRN	28480	2100-3273
A1A5R28	2100-3273	1		RESISTOR-TRMR 2K 10% C SIDE-ADJ 1-TRN	28480	2100-3273
A1A5R29	0698-3415	6	2	RESISTOR 19.6K 1% .5W F TC=0+-100	28480	0698-3415
A1A5R30	0698-3415	6		RESISTOR 19.6K 1% .5W F TC=0+-100	28480	0698-3415
A1A5R31	0757-0439	4	2	RESISTOR 6.81K 1% .125W F TC=0+-100	24546	C4-1/8-T0-6811-F
A1A5R32	0757-0439	4		RESISTOR 6.81K 1% .125W F TC=0+-100	24546	C4-1/8-T0-6811-F
A1A5R33	0757-0438	3		RESISTOR 5.11K 1% .125W F TC=0+-100	24546	C4-1/8-T0-5111-F
A1A5R34	0757-0438	3		RESISTOR 5.11K 1% .125W F TC=0+-100	24546	C4-1/8-T0-5111-F
A1A5R35	0757-0851	4	2	RESISTOR 43.2K 1% .5W F TC=0+-100	28480	0757-0851

TABLE 2. A1A5, REPLACEABLE PARTS (2 OF 2)

Reference Designation	HP Part Number	C D	Qty	Description	Mfr Code	Mfr Part Number
A1A5R36	0757-0851	4		RESISTOR 43.2K 1% .5W F TC=0+-100	28480	0757-0851
A1A5R37	0757-0346	2	4	RESISTOR 10 1% .125W F TC=0+-100	24546	C4-1/8-T0-10R0-F
A1A5R38	0757-0346	2		RESISTOR 10 1% .125W F TC=0+-100	24546	C4-1/8-T0-10R0-F
A1A5R39	0757-0346	2		RESISTOR 10 1% .125W F TC=0+-100	24546	C4-1/8-T0-10R0-F
A1A5R40	0757-0346	2		RESISTOR 10 1% .125W F TC=0+-100	24546	C4-1/8-T0-10R0-F
A1A5R41	0757-0873	0	2	RESISTOR 1.62K 1% .5W F TC=0+-100	28480	0757-0873
A1A5R42	0757-0873	0		RESISTOR 1.62K 1% .5W F TC=0+-100	28480	0757-0873
A1A5R43	0698-3153	9		RESISTOR 3.83K 1% .125W F TC=0+-100	24546	C4-1/8-T0-3831-F
A1A5R44	0757-0394	0		RESISTOR 51.1 1% .125W F TC=0+-100	24546	C4-1/8-T0-51R1-F
A1A5TP1	0360-0535	0	3	TERMINAL TEST POINT PCB	00000	ORDER BY DESCRIPTION
A1A5TP2	0360-0535	0		TERMINAL TEST POINT PCB	00000	ORDER BY DESCRIPTION
A1A5TP3	0360-0535	0		TERMINAL TEST POINT PCB	00000	ORDER BY DESCRIPTION
A1A5U1	1826-0021	8	1	IC OP AMP GP TO-99 PKG	27014	LM310H
				MISCELLANEOUS PARTS		
	5040-6843	2	1	EXTRACTOR	28480	5040-6843
	1205-0095	0	4	HEAT SINK	30161	3225B

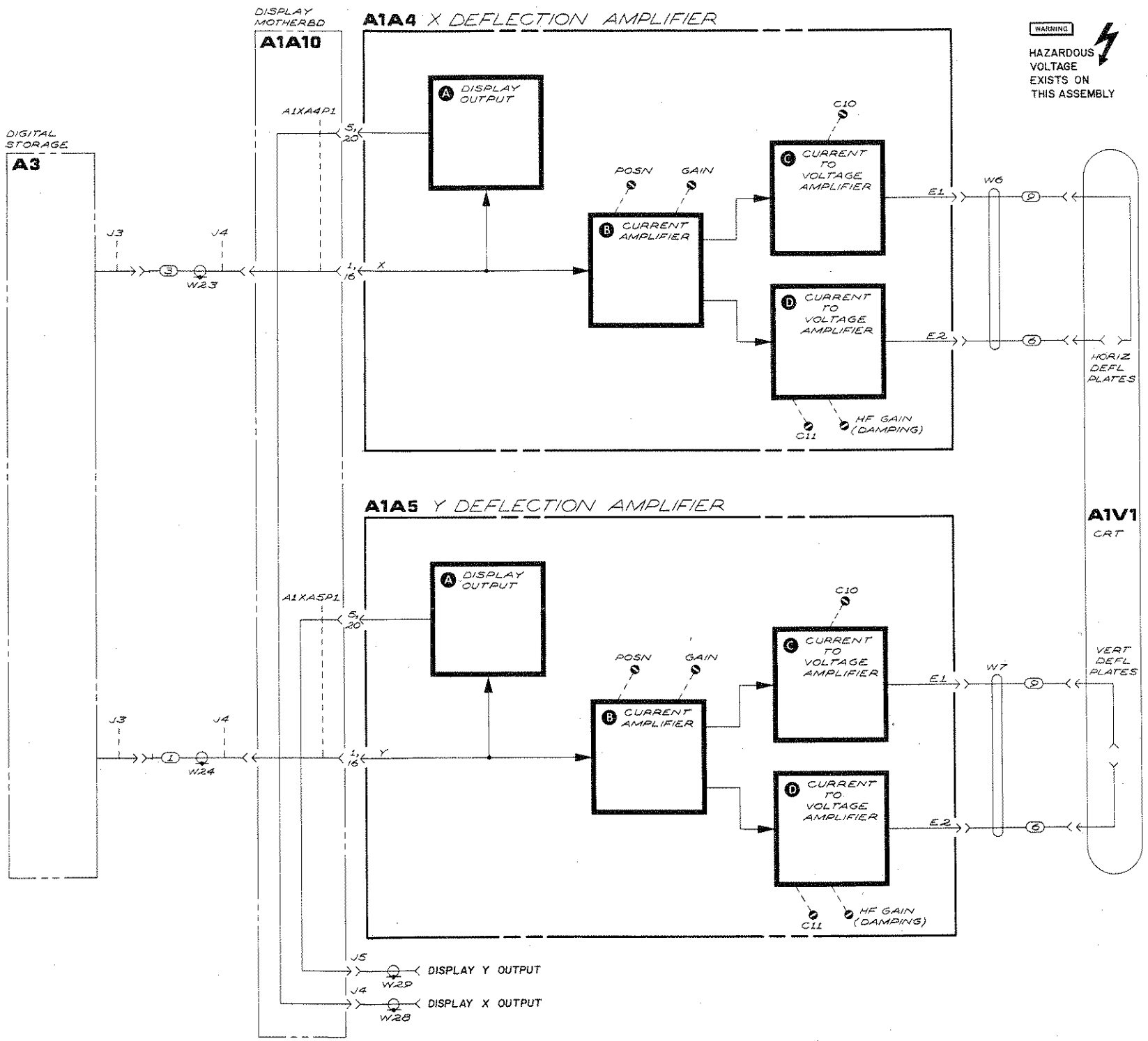

A1A4

FIGURE 1. A1A4 X DEFLECTION AMPLIFIER AND A1A5 Y DEFLECTION AMPLIFIER, BLOCK DIAGRAM

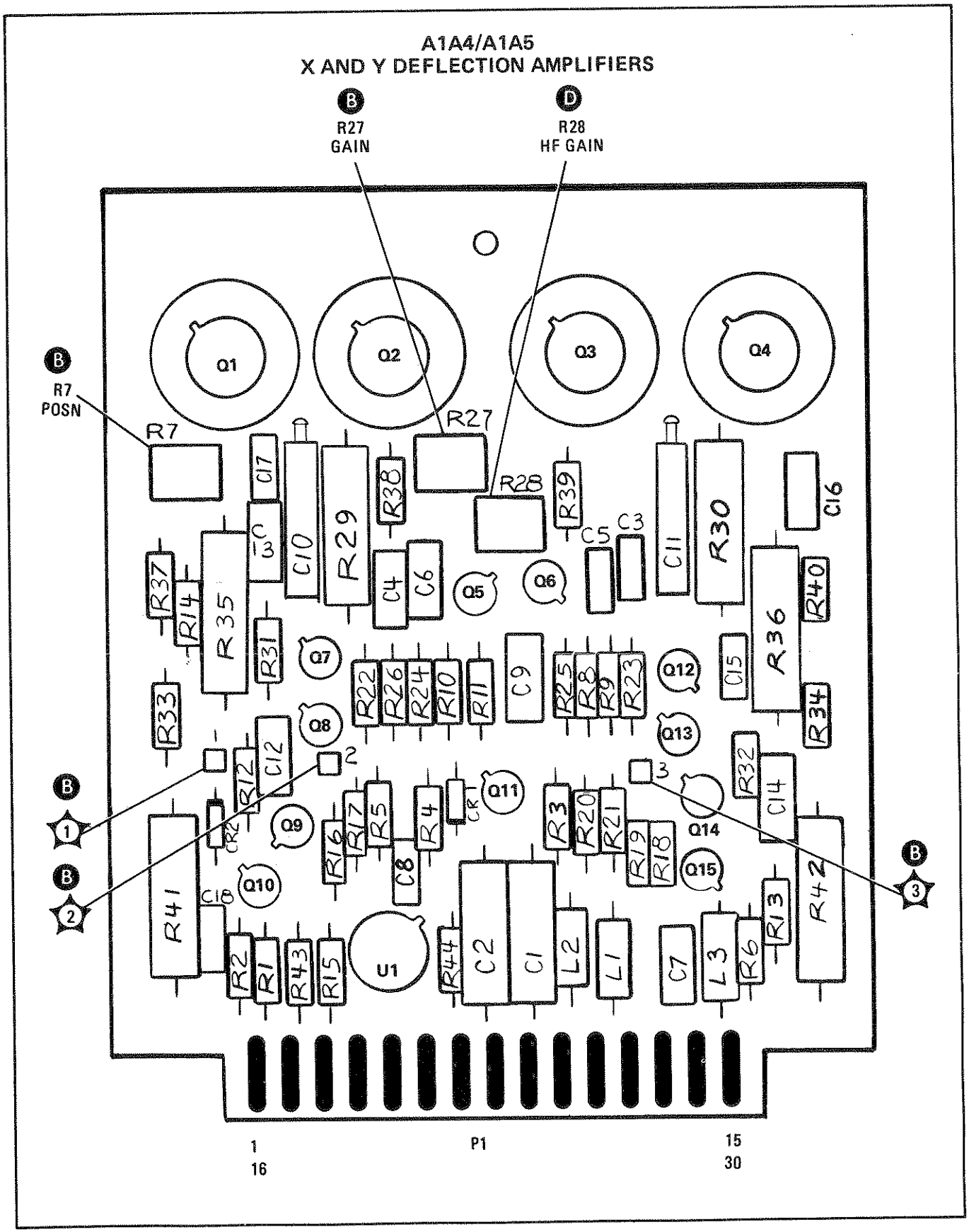

FIGURE 2. A1A4 X DEFLECTION AMPLIFIER AND A1A5 Y DEFLECTION AMPLIFIER, COMPONENT LOCATIONS

A1A4 X DEFLECTION AMPLIFIER
A1A5 Y DEFLECTION AMPLIFIER
85662-60057

P

PIN	SIGNAL	TO/FROM	FUNCTION BLOCK
1 16	HORIZ/VERT INPUT	A3A2	A
2 17	GND GND		E
3 18	NC NC		
4 19	NC NC		
5 20	DISPLAY OUT	REAR PANEL	A
6 21	NC NC		
7 22	-15V -15V		E
8 23	GND GND		E
9 24	+15V +15V		E
10 25	NC NC		
11 26	NC NC		
12 27	+100V +100V		E
13 28	NC NC		
14 29	GND GND		E
15 30	NC NC		

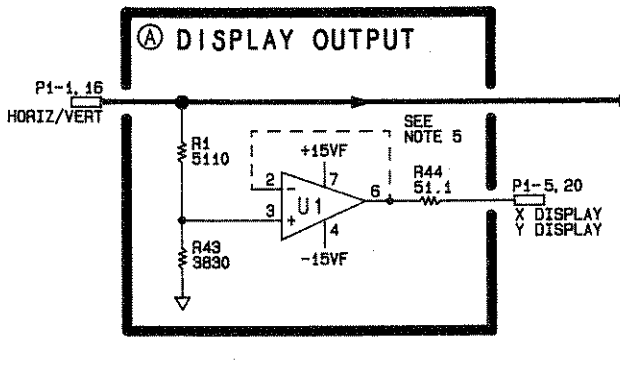

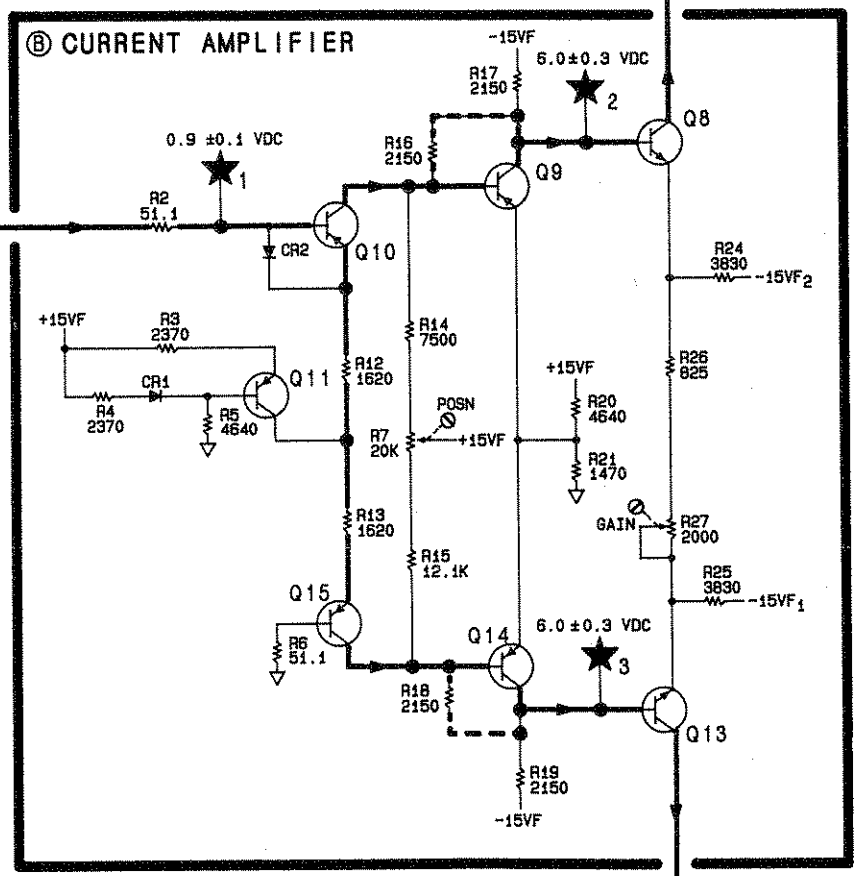

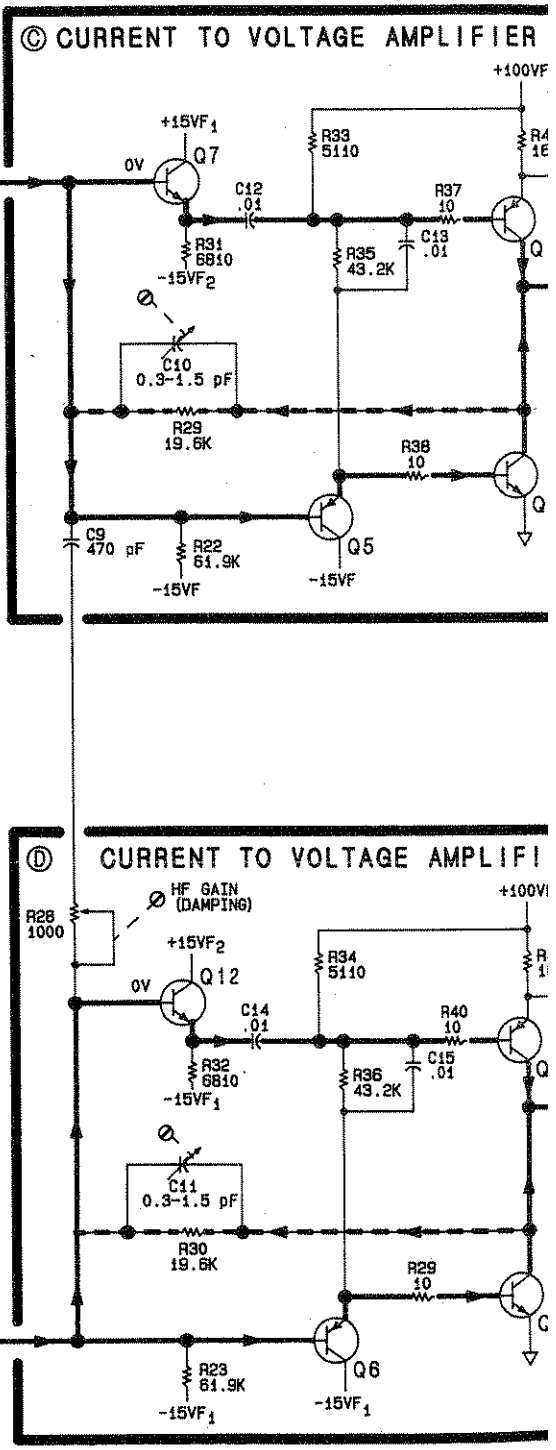

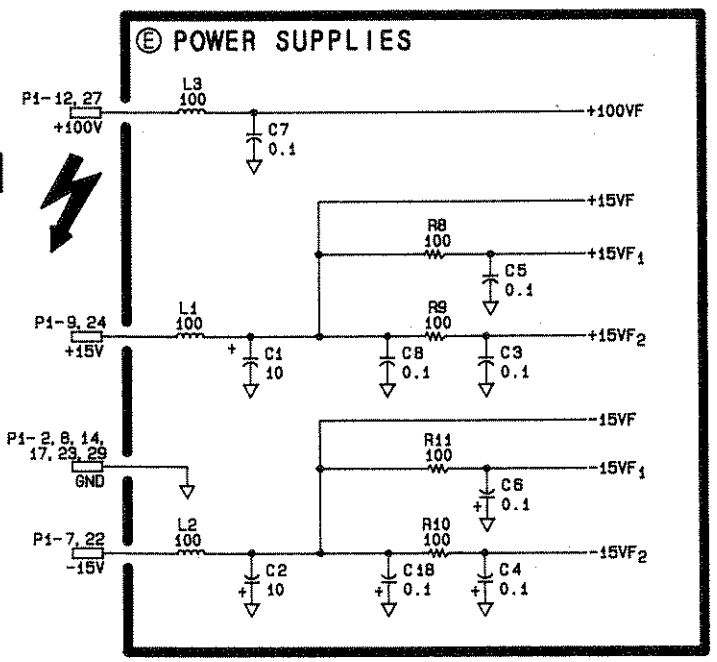

SERIAL PREFIX: 2403A

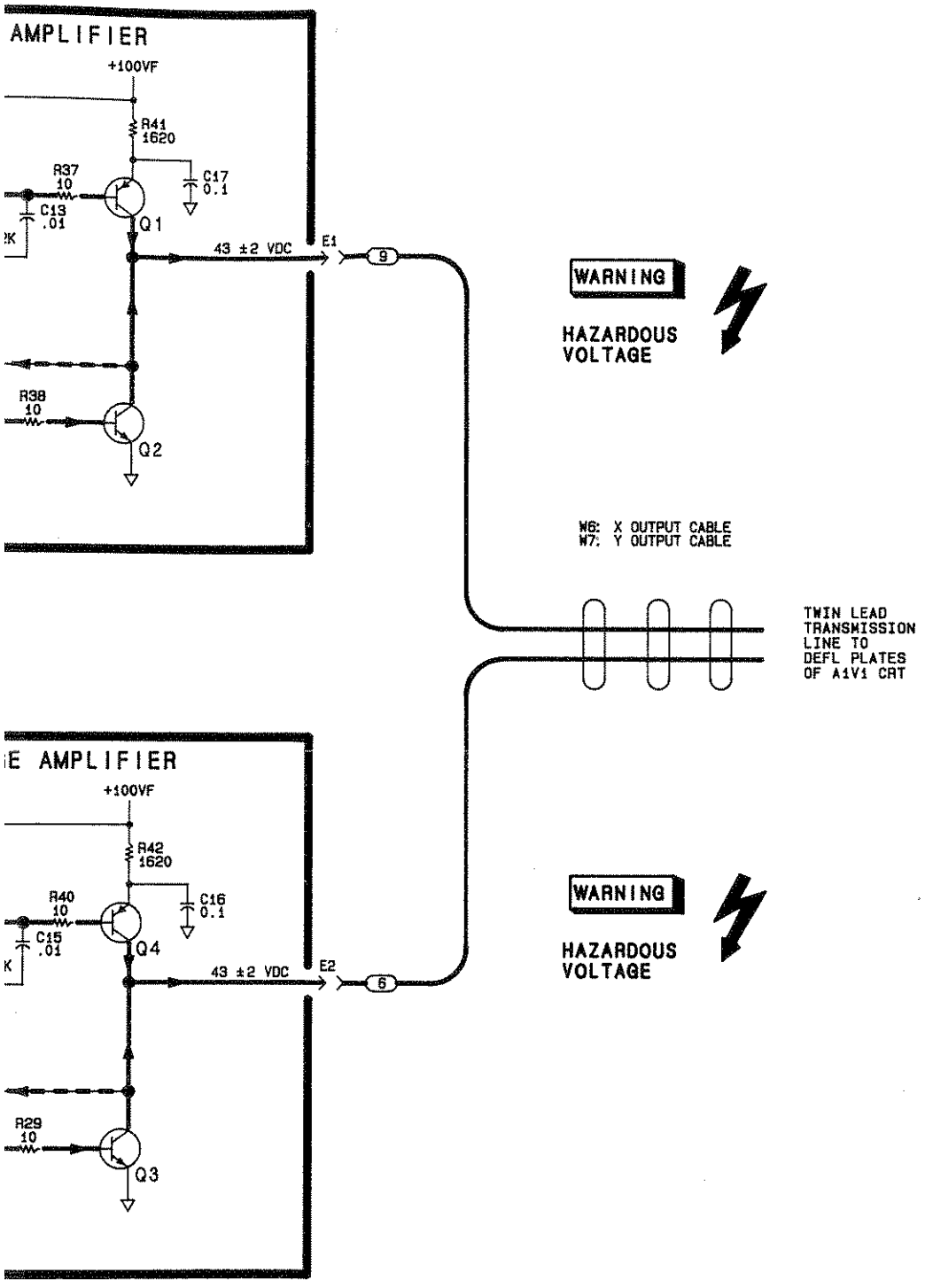

NOTES:

1. REFERENCE DESIGNATORS WITHIN THIS ASSEMBLY ARE ABBREVIATED. FOR COMPLETE REFERENCE DESIGNATION, PREFIX ABBREVIATION WITH ASSEMBLY DESIGNATION.
2. UNLESS OTHERWISE INDICATED:
   RESISTANCE IS IN OHMS (Ω)
   CAPACITANCE IS IN MICROFARADS (μF)
   INDUCTANCE IS IN MICROHENRIES (μH)
3. UNLESS OTHERWISE INDICATED:
   SIGNALS ENTER AT LEFT SIDE OR TOP AND EXIT AT RIGHT SIDE OR BOTTOM OF FUNCTION BLOCKS.
4. DC TEST VOLTAGES ARE VALID WHEN THE FOLLOWING PROGRAM IS KEYED IN:
   INSTRUMENT PRESET
   BLANK TRACE A
   SHIFT LOWER LEFT 0 HZ
   SHIFT UPPER RIGHT
   1090 HZ
   512 HZ
   512 HZ
   1092 HZ
5. INVERTING INPUT (PIN 2) IS INTERNALLY CONNECTED TO OUTPUT (PIN 6).

A1A4
A1A5

FIGURE 3. A1A4 X Deflection Amplifier and A1A5 Y Deflection Amplifier, Schematic Diagram

A1A6 ±15V REGULATOR, CIRCUIT DESCRIPTION

WARNING

Unregulated voltages as high as +150V are present in the IF-Display Section whenever the power cord is connected to a power source. This condition is annunciated by LED indicator A1A8DS1. Remove the power cord when setting up service procedures.

The IF-Display section is activated by the logic signal HPON (power on), which is connected to the RF Section via wire number 22 of the Instrument Bus. A logic "0" (<+0.8V) holds the instrument in a standby condition with all unregulated supplies active and the regulated supplies turned off. A logic "1" (>+2.0V) turns on the regulators and activates the instrument.

A1A6 ±15V Regulator contains the +15V Regulator, to which all other supplies are referenced, the −15V Regulator, a thermal shutdown circuit, and active components necessary for A1A3 High Voltage Regulator to activate the CRT.

NOTE

Reference is made in the following paragraphs to components in other assemblies: A1A3 High Voltage Regulator and A1A7 +100V, +5.2V Regulator. These components are identified by complete reference designations; for example, A1A6Q7.

+15V Regulator (A)

Q1 and Q2 form a current source from the unregulated (+23V typical) supply. Under active conditions, this current drives Darlington regulator Q5 on until amplifier U1 senses an equal-voltage condition between voltage reference VR1 (U1 pin 3) and the sense input (U1 pin 2). U1 then holds that regulated condition by shunting the drive current through R4.

Foldback current limiting is provided by Q4 and the voltage divider string on its base. This circuit senses an overcurrent condition (higher voltage across R11, R18) and limits the current to a value proportional to the supply voltage.

Overvoltage crowbar circuit CR4 and associated circuitry shorts the output when an overvoltage condition of approximately +18.5V is reached. Zener diode CR3 conducts, turning on CR4, which conducts and blows fuse F1.

The regulator circuit can be shut down by turning on Q3, which shunts the source current to ground.

−15V Regulator (B)

The −15V Regulator is a tracking supply, holding the −15V supply to the same magnitude (inverted polarity) as the +15V supply, through divider resistors R19 and R20. Overvoltage and current limiting circuits are identical to those of the +15V supply.

Thermal Shutdown (C)

Thermistor R46 (negative temperature coefficient) is mounted to the heat sink of Q5 and Q9. As the heat sink temperature increases to approximately 80°C, the resistance decreases to less than 107Ω, and the voltage across the bridge circuit in which the thermistor is located changes polarity, causing U4 to go high. This turns on transistors Q3 and A1A7Q2, to shut down all power supplies, and transistor A1A1Q2, to light the front-panel STANDBY indicator. Current feedback through CR6 holds the bridge circuit in an unbalanced condition until the temperature drops to about 55°C, when the increased thermistor resistance again switches the bridge polarity. Q10 turns off the supplies by unbalancing the bridge when its input (HPON) is less than about +2.0V.

High-Voltage Oscillator (D)

The collector of A1A6Q7 is connected to the primary winding of transformer A1A3T1, and a feedback winding is connected to the base of Q7. Positive feedback from the feedback winding causes the circuit to oscillate at a frequency (approximately 25 to 30 kHz) determined primarily by the inductance and capacitance of T1. Q7 operates as a Class C amplifier, supplying a large current (approximately 2A peak) over a conduction period of less than one-half cycle.

Oscillator Level Control (E)

Amplifier U3 regulates the dc level of the high-voltage CRT cathode voltage by controlling the base drive to Q7 through the feedback winding. The cathode voltage is sampled via current through A1A3R4, which is compared with a reference current through A1A6R31, R32, and R50 (referenced to the +100V supply) at the input to U3. The output of U3 then holds the base drive at the level necessary to maintain about −4000 Vdc at the cathode of A1V1. Amplifier open loop gain is set by R35, with R34, R36, and C14 limiting the control loop bandwidth to approximately 7 Hz.

C15 supplies surge current for Q7, and L2 controls the conduction time of Q7. CR15 and CR16 allow U3 to generate self-bias sufficient to maintain level control if the −15V supply should fail.

Q8 disables the CRT by removing the +100V reference for the regulator circuit. Q8 is controlled from A4A9 IF Control, which may be addressed via the Instrument Bus.

A1A7 +100V, +5.2V REGULATOR, CIRCUIT DESCRIPTION

A1A7 +100V, +5.2V Regulator receives +118V unregulated and +9V unregulated inputs from A1A8 Rectifier to provide regulated outputs of +100V and +5.2V.

+100V Regulator (A)

Q7 and associated circuitry form a current source of approximately 3 mA from the unregulated +118V supply. Under active conditions, this current drives Q8 on until amplifier U2 senses an equal voltage condition between the voltage reference (divider resistors R8 and R9 from the +15V supply) and the sense input (U2 pin 2). U2 then holds the regulated condition by shunting current through Q4.

The +100V regulator circuit is shut down by PWR DWN going high, turning on Q2, which shunts the source current to ground.

+5.2V Regulator (B)

The +5.2V Regulator is similar to the −15V Regulator in A1A6 ±15V Regulator. It is referenced to the +15V supply and has overvoltage and current limiting circuits similar to those in the −15V Regulator.

IF-DISPLAY SECTION INTERNAL FUSE REPLACEMENT

WARNING

Remove AC Line cord from both instruments before proceeding with this procedure.

1. Remove feet ❶ from rear of instrument by removing screws ❷ shown in View A.
2. Remove top cover from IF-Display Section by loosening screw ❸ shown in View A.
3. Remove metal cover from Low Voltage Power Supply section by removing rear screws ❹, cable clamp and screw ❺, and front screws ❻ shown in View B.
4. The fuses for the +15 Vdc, -15 Vdc, and HV oscillator are located on the A1A6 ±15V Regulator and the fuses for the +5.2 Vdc and +100 Vdc supplies are located on the A1A7 +5.2V, +100V Regulator. Locations are shown in View B.

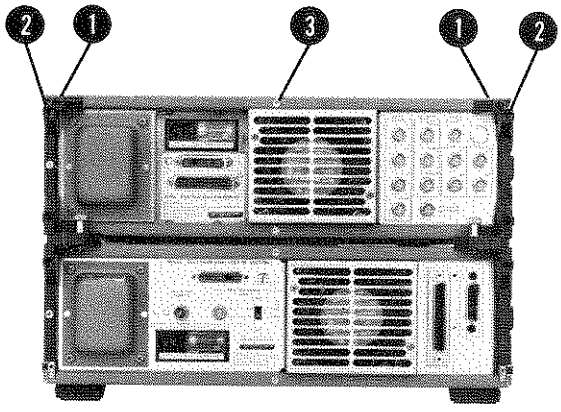

VIEW A

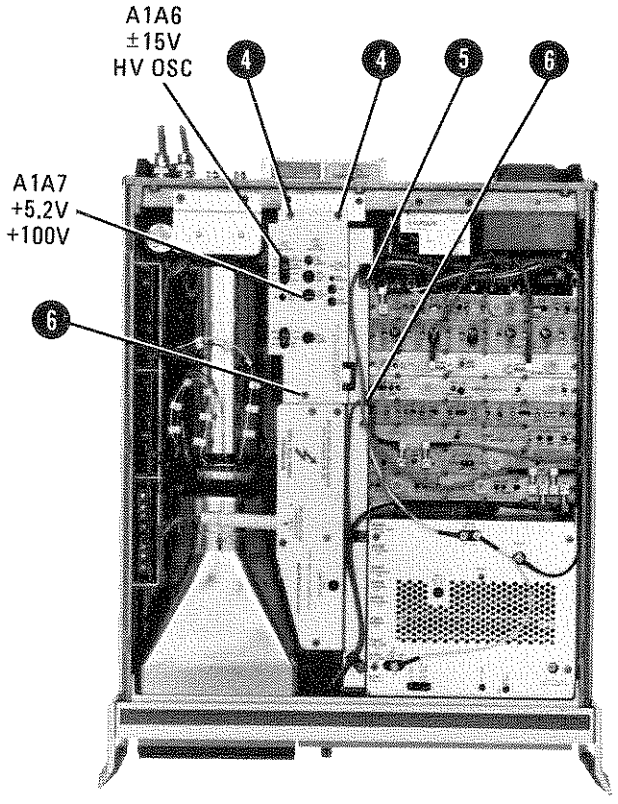

VIEW B

FIGURE 1. IF-DISPLAY SECTION INTERNAL FUSE REPLACEMENT

TABLE 1. A1A6, REPLACEABLE PARTS (1 OF 2)

Reference Designation	HP Part Number	CD	Qty	Description	Mfr Code	Mfr Part Number
A1A6	05662-60101	2	1	BOARD ASSEMBLY, +/-15V REGULATOR	28480	05662-60101
A1A6C1	0180-2205	3	1	CAPACITOR-FXD .33UF+-10% 35VDC TA	56289	150D334X9035A2
A1A6C2	0180-0116	1	1	CAPACITOR-FXD 6.8UF+-10% 35VDC TA	56289	150D685X9035B2
A1A6C3	0160-2199	2	2	CAPACITOR-FXD 30PF +-5% 300VDC MICA	28480	0160-2199
A1A6C4	0180-1746	5	3	CAPACITOR-FXD 15UF+-10% 20VDC TA	56289	150D156X9020B2
A1A6C5	0180-0228	6	1	CAPACITOR-FXD 22UF+-10% 15VDC TA	56289	150D226X9015B2
A1A6C6	0180-1746	5		CAPACITOR-FXD 15UF+-10% 20VDC TA	56289	150D156X9020B2
A1A6C7	0180-0197	8	1	CAPACITOR-FXD 2.2UF+-10% 20VDC TA	56289	150D225X9020A2
A1A6C8	0160-3456	6	1	CAPACITOR-FXD 1000PF +-10% 1KVDC CER	28480	0160-3456
A1A6C9	0160-2199	2		CAPACITOR-FXD 30PF +-5% 300VDC MICA	28480	0160-2199
A1A6C10	0180-0291	3	1	CAPACITOR-FXD 1UF+-10% 35VDC TA	56289	150D105X9035A2
A1A6C11	0180-1746	5		CAPACITOR-FXD 15UF+-10% 20VDC TA	56289	150D156X9020B2
A1A6C12	0180-0141	2	1	CAPACITOR-FXD 50UF+75-10% 50VDC AL	56289	30D506G050DD2
A1A6C13	0160-0164	7	1	CAPACITOR-FXD .039UF +-10% 200VDC POLYE	28480	0160-0164
A1A6C14	0160-4084	8	3	CAPACITOR-FXD .1UF +-20% 50VDC CER	28480	0160-4084
A1A6C15	0160-0166	9	1	CAPACITOR-FXD .068UF +-10% 200VDC POLYE	28480	0160-0166
A1A6C16	0160-4084	8		CAPACITOR-FXD .1UF +-20% 50VDC CER	28480	0160-4084
A1A6C17	0160-4084	8		CAPACITOR-FXD .1UF +-20% 50VDC CER	28480	0160-4084
A1A6CR1				NOT ASSIGNED		
A1A6CR2	1901-0033	2	5	DIODE-GEN PRP 180V 200MA DO-7	28480	1901-0033
A1A6CR3	1902-3224	1	2	DIODE-ZNR 17.8V 5% DO-35 PD=.4W	28480	1902-3224
A1A6CR4	1884-0018	5	2	THYRISTOR-SCR 2N4186 VRRM=200	04713	2N4186
A1A6CR5				NOT ASSIGNED		
A1A6CR6	1901-0033	2		DIODE-GEN PRP 180V 200MA DO-7	28480	1901-0033
A1A6CR7	1902-3224	1		DIODE-ZNR 17.8V 5% DO-35 PD=.4W	28480	1902-3224
A1A6CR8	1901-0033	2		DIODE-GEN PRP 180V 200MA DO-7	28480	1901-0033
A1A6CR9	1884-0018	5		THYRISTOR-SCR 2N4186 VRRM=200	04713	2N4186
A1A6CR10	1901-0033	2		DIODE-GEN PRP 180V 200MA DO-7	28480	1901-0033
A1A6CR11	1901-0200	5	1	DIODE-PWR RECT 100V 1.5A	28480	1901-0200
A1A6CR12				NOT ASSIGNED		
A1A6CR13	1901-0028	5	2	DIODE-PWR RECT 400V 750MA DO-29	28480	1901-0028
A1A6CR14	1901-0028	5		DIODE-PWR RECT 400V 750MA DO-29	28480	1901-0028
A1A6CR15	1901-0040	1	2	DIODE-SWITCHING 30V 50MA 2NS DO-35	28480	1901-0040
A1A6CR16	1901-0040	1		DIODE-SWITCHING 30V 50MA 2NS DO-35	28480	1901-0040
A1A6CR17	1902-0556	6	1	DIODE-ZNR 20V 5% PD=1W IR=5UA	28480	1902-0556
A1A6CR18	1901-0033	2		DIODE-GEN PRP 180V 200MA DO-7	28480	1901-0033
A1A6DS1	1990-0487	7	2	LED-LAMP LUM-INT=1MCD IF=20MA-MAX BVR=5V	28480	5082-4584
A1A6DS2	1990-0487	7		LED-LAMP LUM-INT=1MCD IF=20MA-MAX BVR=5V	28480	5082-4584
A1A6F1	2110-0083	6	1	FUSE 2.5A 250V NTD 1.25X.25 UL	28480	2110-0083
A1A6F2	2110-0082	9	1	FUSE 2A 250V NTD 1.25X.25 UL	75915	312002
A1A6F3	2110-0007	4	1	FUSE 1A 250V TD 1.25X.25 UL	75915	313001
A1A6L1	9140-0171	3	1	INDUCTOR RF-CH-MLD 40UH 10% .296DX.968LG	28480	9140-0171
A1A6L2	9100-1641	0	1	INDUCTOR RF-CH-MLD 240UH 5% .166DX.385LG	28480	9100-1641
A1A6Q1	1853-0281	9	3	TRANSISTOR PNP 2N2907A SI TO-18 PD=400MW	04713	2N2907A
A1A6Q2	1853-0281	9		TRANSISTOR PNP 2N2907A SI TO-18 PD=400MW	04713	2N2907A
A1A6Q3	1854-0477	7	2	TRANSISTOR NPN 2N2222A SI TO-18 PD=500MW	04713	2N2222A
A1A6Q4	1854-0019	3	2	TRANSISTOR NPN SI TO-18 PD=360MW	28480	1854-0019
A1A6Q5	1854-0611	1	2	TRANSISTOR NPN 2N6055 SI DARL TO-3	04713	2N6055
A1A6Q6	1854-0019	3		TRANSISTOR NPN SI TO-18 PD=360MW	28480	1854-0019
A1A6Q7	1854-0518	7	1	TRANSISTOR NPN 2N5877 SI TO-3 PD=150W	04713	2N5877
A1A6Q8	1854-0477	7		TRANSISTOR NPN 2N2222A SI TO-18 PD=500MW	04713	2N2222A
A1A6Q9	1854-0611	1		TRANSISTOR NPN 2N6055 SI DARL TO-3	04713	2N6055
A1A6Q10	1853-0281	9		TRANSISTOR PNP 2N2907A SI TO-18 PD=400MW	04713	2N2907A
A1A6R1	0757-0442	9	7	RESISTOR 10K 1% .125W F TC=0+-100	24546	C4-1/8-T0-1002-F
A1A6R2	0757-0403	2	2	RESISTOR 121 1% .125W F TC=0+-100	24546	C4-1/8-T0-121R-F
A1A6R3	0757-0394	0	1	RESISTOR 51.1 1% .125W F TC=0+-100	24546	C4-1/8-T0-51R1-F
A1A6R4	0698-3150	6	1	RESISTOR 2.37K 1% .125W F TC=0+-100	24546	C4-1/8-T0-2371-F
A1A6R5	0698-3442	9	1	RESISTOR 237 1% .125W F TC=0+-100	24546	C4-1/8-T0-237R-F
A1A6R6	0757-1094	9	2	RESISTOR 1.47K 1% .125W F TC=0+-100	24546	C4-1/8-T0-1471-F
A1A6R7	0757-0442	9		RESISTOR 10K 1% .125W F TC=0+-100	24546	C4-1/8-T0-1002-F
A1A6R8	0698-3247	2	1	RESISTOR 4.53K .25% .125W F TC=0+-50	28480	0698-3247
A1A6R9	2100-3095	5	1	RESISTOR-TRMR 200 10% C SIDE-ADJ 17-TRN	02111	43P201
A1A6R10	0698-6835	0	1	RESISTOR 3.16K .5% .125W F TC=0+-50	24546	NC55-1/8-T2-3161-D
A1A6R11	0811-1669	0	2	RESISTOR 1.8 5% 2W PW TC=0+-400	75042	BWH2-1R8-J
A1A6R12	0757-0280	3	2	RESISTOR 1K 1% .125W F TC=0+-100	24546	C4-1/8-T0-1001-F
A1A6R13	0757-0424	7	1	RESISTOR 1.1K 1% .125W F TC=0+-100	24546	C4-1/8-T0-1101-F
A1A6R14	0683-0275	9	2	RESISTOR 2.7 5% .25W FC TC=-400/+500	01121	CB2705
A1A6R15	0698-3444	1	2	RESISTOR 316 1% .125W F TC=0+-100	24546	C4-1/8-T0-316R-F
A1A6R16	0757-0346	2	2	RESISTOR 10 1% .125W F TC=0+-100	24546	C4-1/8-T0-10R0-F
A1A6R17	0757-0317	7	2	RESISTOR 1.33K 1% .125W F TC=0+-100	24546	C4-1/8-T0-1331-F
A1A6R18	0811-1669	0		RESISTOR 1.8 5% 2W PW TC=0+-400	75042	BWH2-1R8-J
A1A6R19	0698-7794	2	2	RESISTOR 10K .25% .125W F TC=0+-100	19701	MF4C1/8-T0-1002-C
A1A6R20	0698-7794	2		RESISTOR 10K .25% .125W F TC=0+-100	19701	MF4C1/8-T0-1002-C

TABLE 1. A1A6, REPLACEABLE PARTS (2 OF 2)

Reference Designation	HP Part Number	C D	Qty	Description	Mfr Code	Mfr Part Number
A1A6R21	0698-3444	1		RESISTOR 316 1% .125W F TC=0+-100	24546	C4-1/8-T0-316R-F
A1A6R22	0757-0418	9	2	RESISTOR 619 1% .125W F TC=0+-100	24546	C4-1/8-T0-619R-F
A1A6R23	0757-0346	2		RESISTOR 10 1% .125W F TC=0+-100	24546	C4-1/8-T0-10R0-F
A1A6R24	0757-0276	7	1	RESISTOR 61.9 1% .125W F TC=0+-100	24546	C4-1/8-T0-6192-F
A1A6R25	0757-0418	9		RESISTOR 619 1% .125W F TC=0+-100	24546	C4-1/8-T0-619R-F
A1A6R26	0757-0442	9		RESISTOR 10K 1% .125W F TC=0+-100	24546	C4-1/8-T0-1002-F
A1A6R27	0757-0317	7		RESISTOR 1.33K 1% .125W F TC=0+-100	24546	C4-1/8-T0-1331-F
A1A6R28	0811-1661	2	1	RESISTOR .39 5% 2W PW TC=0+-800	75042	BWH2-39/100-J
A1A6R29	0683-0275	9		RESISTOR 2.7 5% .25W FC TC=-400/+500	01121	CB2705
A1A6R30	0757-0280	3		RESISTOR 1K 1% .125W F TC=0+-100	24546	C4-1/8-T0-1001-F
A1A6R31	0698-3243	8	1	RESISTOR 178K 1% .125W F TC=0+-100	24546	C4-1/8-T0-1783-F
A1A6R32	2100-3054	6	1	RESISTOR-TRMR 50K 10% C SIDE-ADJ 17-TRN	02111	43P503
A1A6R33	0757-0465	6	2	RESISTOR 100K 1% .125W F TC=0+-100	24546	C4-1/8-T0-1003-F
A1A6R34	0757-0465	6		RESISTOR 100K 1% .125W F TC=0+-100	24546	C4-1/8-T0-1003-F
A1A6R35	0683-2265	1	1	RESISTOR 22M 5% .25W FC TC=-900/+1200	01121	CB2265
A1A6R36	0698-3459	8	1	RESISTOR 383K 1% .125W F TC=0+-100	28480	0698-3459
A1A6R37	0757-0403	2		RESISTOR 121 1% .125W F TC=0+-100	24546	C4-1/8-T0-121R-F
A1A6R38	0698-3446	3	2	RESISTOR 383 1% .125W F TC=0+-100	24546	C4-1/8-T0-383R-F
A1A6R39	0757-0442	9		RESISTOR 10K 1% .125W F TC=0+-100	24546	C4-1/8-T0-1002-F
A1A6R40	0757-0442	9		RESISTOR 10K 1% .125W F TC=0+-100	24546	C4-1/8-T0-1002-F
A1A6R41	0698-3446	3		RESISTOR 383 1% .125W F TC=0+-100	24546	C4-1/8-T0-383R-F
A1A6R42	0757-0290	5	2	RESISTOR 6.19K 1% .125W F TC=0+-100	19701	MF4C1/8-T0-6191-F
A1A6R43	0698-4405	6	1	RESISTOR 107 1% .125W F TC=0+-100	24546	C4-1/8-T0-107R-F
A1A6R44	0757-1094	9		RESISTOR 1.47K 1% .125W F TC=0+-100	24546	C4-1/8-T0-1471-F
A1A6R45	0757-0290	5		RESISTOR 6.19K 1% .125W F TC=0+-100	19701	MF4C1/8-T0-6191-F
A1A6R46	0837-0126	6	1	THERMISTOR DISC 1K-OHM TC=-4.4%/C-DEG	28480	0837-0126
A1A6R47				NOT ASSIGNED		
A1A6R48	0698-3154	0	1	RESISTOR 4.22K 1% .125W F TC=0+-100	24546	C4-1/8-T0-4221-F
A1A6R49	0757-0816	1	1	RESISTOR 681 1% .5W F TC=0+-100	28480	0757-0816
A1A6R50	0757-0462	3	1	RESISTOR 75K 1% .125W F TC=0+-100	24546	C4-1/8-T0-7502-F
A1A6R51	0757-0442	9		RESISTOR 10K 1% .125W F TC=0+-100	24546	C4-1/8-T0-1002-F
A1A6R52	0757-0442	9		RESISTOR 10K 1% .125W F TC=0+-100	24546	C4-1/8-T0-1002-F
A1A6TP1	1251-0600	0	7	CONNECTOR-SGL CONT PIN 1.14-MM-BSC-SZ SQ	28480	1251-0600
A1A6TP2	1251-0600	0		CONNECTOR-SGL CONT PIN 1.14-MM-BSC-SZ SQ	28480	1251-0600
A1A6TP3	1251-0600	0		CONNECTOR-SGL CONT PIN 1.14-MM-BSC-SZ SQ	28480	1251-0600
A1A6TP4	1251-0600	0		CONNECTOR-SGL CONT PIN 1.14-MM-BSC-SZ SQ	28480	1251-0600
A1A6TP5	1251-0600	0		CONNECTOR-SGL CONT PIN 1.14-MM-BSC-SZ SQ	28480	1251-0600
A1A6TP6	1251-0600	0		CONNECTOR-SGL CONT PIN 1.14-MM-BSC-SZ SQ	28480	1251-0600
A1A6TP7	1251-0600	0		CONNECTOR-SGL CONT PIN 1.14-MM-BSC-SZ SQ	28480	1251-0600
A1A6U1	1820-0223	0	2	IC OP AMP GP TO-99 PKG	3L585	CA301AT
A1A6U2	1820-0223	0		IC OP AMP GP TO-99 PKG	3L585	CA301AT
A1A6U3	1826-0167	3	1	IC OP AMP PRGMBL TO-99 PKG	3L585	CA3094AT
A1A6U4	1826-0026	3	1	IC COMPARATOR PRCN TO-99 PKG	01295	LM311L
A1A6VR1	1902-0686	3	1	DIODE-ZNR 6.2V 2% DO-7 PD=.4W TC=+.002%	04713	1N825
A1A6VR2	1902-0554	4	1	DIODE-ZNR 10V 5% PD=1W IR=10UA	28480	1902-0554
A1A6VR3	1902-3263	8	1	DIODE-ZNR 24.9V 2% DO-35 PD=.4W	28480	1902-3263
				MISCELLANEOUS PARTS		
	4040-0754	1	1	EXTR PC BD BLU	28480	4040-0754

TABLE 2. A1A7, REPLACEABLE PARTS

Reference Designation	HP Part Number	C D	Qty	Description	Mfr Code	Mfr Part Number
A1A7	85662-60052	2	1	BOARD ASSEMBLY, +100V +5.2V REGULATOR	28480	85662-60052
A1A7C1	0180-0197	8	2	CAPACITOR-FXD 2.2UF+-10% 20VDC TA	56289	150D225X9020A2
A1A7C2	0160-3670	6	1	CAPACITOR-FXD .1UF +-20% 200VDC CER	28480	0160-3670
A1A7C3	0160-2199	2	2	CAPACITOR-FXD 30PF +-5% 300VDC MICA	28480	0160-2199
A1A7C4	0180-0228	6	2	CAPACITOR-FXD 22UF+-10% 15VDC TA	56289	150D226X9015B2
A1A7C5	0160-2199	2		CAPACITOR-FXD 30PF +-5% 300VDC MICA	28480	0160-2199
A1A7C6	0180-0291	3	1	CAPACITOR-FXD 1UF+-10% 35VDC TA	56289	150D105X9035A2
A1A7C7	0180-0228	6		CAPACITOR-FXD 22UF+-10% 15VDC TA	56289	150D226X9015B2
A1A7C8	0180-0197	8		CAPACITOR-FXD 2.2UF+-10% 20VDC TA	56289	150D225X9020A2
A1A7C9	0160-3449	7	1	CAPACITOR-FXD 2000PF +-10% 250VDC CER	28480	0160-3449
A1A7C10	0160-4084	8	1	CAPACITOR-FXD .1UF +-20% 50VDC CER	28480	0160-4084
A1A7CR1	1901-0050	3	2	DIODE-SWITCHING 80V 200MA 2NS DO-35	28480	1901-0050
A1A7CR2	1901-0050	3		DIODE-SWITCHING 80V 200MA 2NS DO-35	28480	1901-0050
A1A7CR3	1901-0033	2	2	DIODE-GEN PRP 180V 200MA DO-7	28480	1901-0033
A1A7CR4	1902-0513	5	1	DIODE-ZNR 82.5V 2% DO-15 PD=1W TC=+.082%	28480	1902-0513
A1A7CR5	1902-3256	9	1	DIODE-ZNR 23.7V 5% DO-35 PD=.4W	28480	1902-3256
A1A7CR6	1901-0033	2		DIODE-GEN PRP 180V 200MA DO-7	28480	1901-0033
A1A7CR7	1902-0049	2	1	DIODE-ZNR 6.19V 5% DO-35 PD=.4W	28480	1902-0049
A1A7CR8	1884-0010	5	1	THYRISTOR-SCR 2N4186 VRRM=200	04713	2N4186
A1A7CR9	1901-0200	5	1	DIODE-PWR RECT 100V 1.5A	28480	1901-0200
A1A7DS1	1990-0487	7	2	LED-LAMP LUM-INT=1MCD IF=20MA-MAX BVR=5V	28480	5082-4584
A1A7DS2	1990-0487	7		LED-LAMP LUM-INT=1MCD IF=20MA-MAX BVR=5V	28480	5082-4584
A1A7F1	2110-0010	9	1	FUSE 5A 250V NTD 1.25X.25 UL	75915	312005
A1A7F2	2110-0004	1	1	FUSE .25A 250V NTD 1.25X.25 UL	28480	2110-0004
A1A7L1	9100-1641	0	1	INDUCTOR RF-CH-MLD 240UH 5% .166DX.385LG	28480	9100-1641
A1A7MP1	0340-0416	4	2	INSULATOR-XSTR THERMA-FILM	28480	0340-0416
A1A7MP2	0380-0886	6	3	STANDOFF-RVT-ON .1-IN-LG 4-40THD	00000	ORDER BY DESCRIPTION
A1A7MP3-A1A7MP10				NOT ASSIGNED		
A1A7MP11	0570-0034	9	1	SCREW-MACH 4-40 .25-IN-LG RD-HD-SLT	00000	ORDER BY DESCRIPTION
A1A7Q1	1854-0404	0	2	TRANSISTOR NPN SI TO-18 PD=360MW	28480	1854-0404
A1A7Q2	1854-0404	0		TRANSISTOR NPN SI TO-18 PD=360MW	28480	1854-0404
A1A7Q3	1854-0019	3	2	TRANSISTOR NPN SI TO-18 PD=360MW	28480	1854-0819
A1A7Q4	1854-0523	4	1	TRANSISTOR NPN SI TO-39 PD=1W FT=150MHZ	28480	1854-0523
A1A7Q5	1854-0019	3		TRANSISTOR NPN SI TO-18 PD=360MW	28480	1854-0019
A1A7Q6	1854-0618	8	1	TRANSISTOR NPN SI DARL TO-3 PD=150W	04713	MJ3000
A1A7Q7	1853-0414	0	1	TRANSISTOR PNP 2N6423 SI TO-66 PD=35W	04713	2N6423
A1A7Q8	1854-0311	8	1	TRANSISTOR NPN 2N4240 SI TO-66 PD=35W	3L585	2N4240
A1A7R1	0757-0466	7	1	RESISTOR 110K 1% .125W F TC=0+-100	24546	C4-1/8-T0-1103-F
A1A7R2	0757-0442	9	5	RESISTOR 10K 1% .125W F TC=0+-100	24546	C4-1/8-T0-1002-F
A1A7R3	0757-0442	9		RESISTOR 10K 1% .125W F TC=0+-100	24546	C4-1/8-T0-1002-F
A1A7R4	0757-0442	9		RESISTOR 10K 1% .125W F TC=0+-100	24546	C4-1/8-T0-1002-F
A1A7R5	0698-3440	7	2	RESISTOR 196 1% .125W F TC=0+-100	24546	C4-1/8-T0-196R-F
A1A7R6	0698-3440	7		RESISTOR 196 1% .125W F TC=0+-100	24546	C4-1/8-T0-196R-F
A1A7R7	0757-0317	7	2	RESISTOR 1.33K 1% .125W F TC=0+-100	24546	C4-1/8-T0-1331-F
A1A7R8	0757-0438	3	2	RESISTOR 5.11K 1% .125W F TC=0+-100	24546	C4-1/8-T0-5111-F
A1A7R9	0757-0442	9		RESISTOR 10K 1% .125W F TC=0+-100	24546	C4-1/8-T0-1002-F
A1A7R10	0698-7794	2	1	RESISTOR 10K .25% .125W F TC=0+-100	19701	MF4C1/8-T0-1002-C
A1A7R11	0698-8417	8	1	RESISTOR 5.3K .25% .125W F TC=0+-50	19701	MF4C1/8-T2-5301-C
A1A7R12	0757-0418	9	2	RESISTOR 619 1% .125W F TC=0+-100	24546	C4-1/8-T0-619R-F
A1A7R13	0757-0276	7	1	RESISTOR 61.9 1% .125W F TC=0+-100	24546	C4-1/8-T0-6192-F
A1A7R14	0757-0438	3		RESISTOR 5.11K 1% .125W F TC=0+-100	24546	C4-1/8-T0-5111-F
A1A7R15	0757-0274	5	1	RESISTOR 1.21K 1% .125W F TC=0+-100	24546	C4-1/8-T0-1211-F
A1A7R16	0698-3427	0	2	RESISTOR 13.3 1% .125W F TC=0+-100	03888	PME55-1/8-T0-13R3-F
A1A7R17	0757-0401	8	1	RESISTOR 100 1% .125W F TC=0+-100	24546	C4-1/8-T0-101-F
A1A7R18	0812-0066	1	2	RESISTOR .33 5% 2W PW TC=0+-800	75042	BWH2-33/100-J
A1A7R19	0698-3444	1	1	RESISTOR 316 1% .125W F TC=0+-100	24546	C4-1/8-T0-316R-F
A1A7R20	0683-0275	9	1	RESISTOR 2.7 5% .25W FC TC=-400/+500	01121	CB27G5
A1A7R21	0698-0085	0	1	RESISTOR 2.61K 1% .125W F TC=0+-100	24546	C4-1/8-T0-2611-F
A1A7R22	0698-3453	2	1	RESISTOR 196K 1% .125W F TC=0+-100	24546	C4-1/8-T0-1963-F
A1A7R23	0757-0464	5	1	RESISTOR 90.9K 1% .125W F TC=0+-100	24546	C4-1/8-T0-9092-F
A1A7R24	0757-0442	9		RESISTOR 10K 1% .125W F TC=0+-100	24546	C4-1/8-T0-1002-F
A1A7R25	0698-3427	0		RESISTOR 13.3 1% .125W F TC=0+-100	03888	PME55-1/8-T0-13R3-F
A1A7R26	0757-0444	1	1	RESISTOR 12.1K 1% .125W F TC=0+-100	24546	C4-1/8-T0-1212-F
A1A7R27	0757-0418	9		RESISTOR 619 1% .125W F TC=0+-100	24546	C4-1/8-T0-619R-F
A1A7R28	0757-0317	7		RESISTOR 1.33K 1% .125W F TC=0+-100	24546	C4-1/8-T0-1331-F
A1A7R29	0812-0066	1		RESISTOR .33 5% 2W PW TC=0+-800	75042	BWH2-33/100-J
A1A7U1	1820-0223	0	2	IC OP AMP GP TO-99 PKG	3L585	CA301AT
A1A7U2	1820-0223	0		IC OP AMP GP TO-99 PKG	3L585	CA301AT
				MISCELLANEOUS PARTS		
	4040-0755	2	1	EXTR-PC BD VIO POLYC .062-BD-THKNS	28480	4040-0755

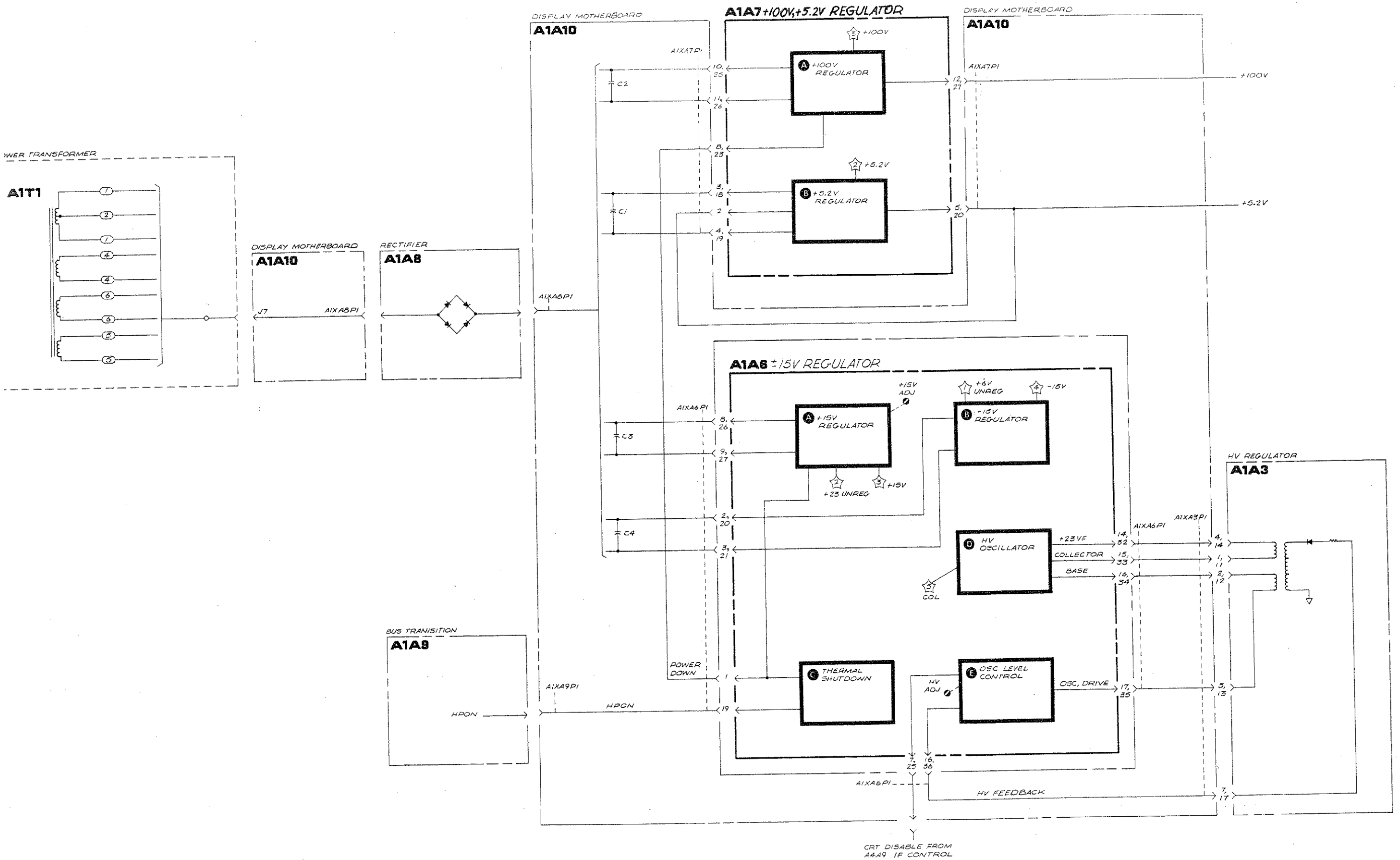

A1A6
A1A7

FIGURE 2. A1A6 ± 15V REGULATOR AND A1A7 + 100V, + 5.2V REGULATOR, BLOCK DIAGRAM

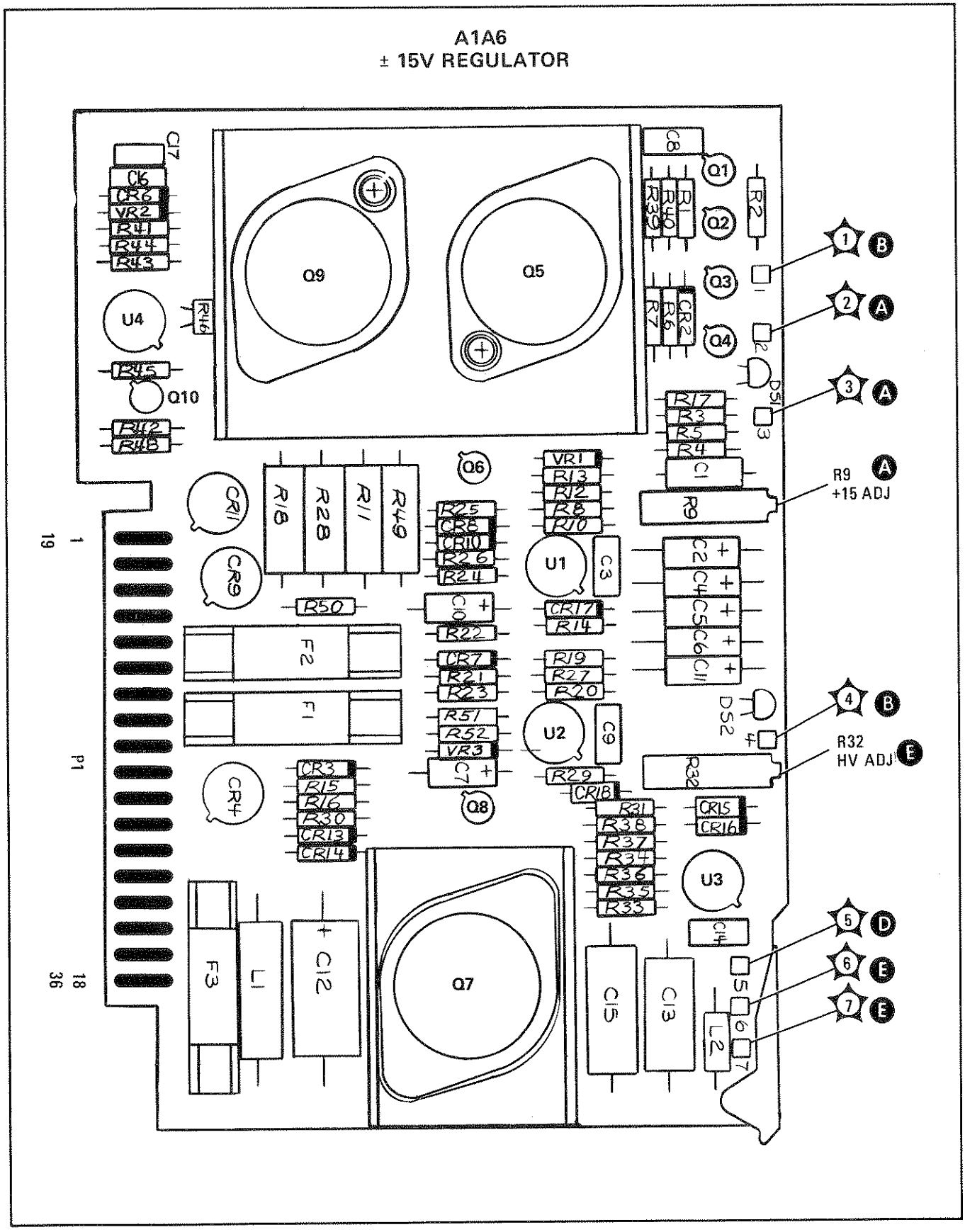

FIGURE 3. A1A6 ± 15V REGULATOR, COMPONENT LOCATIONS

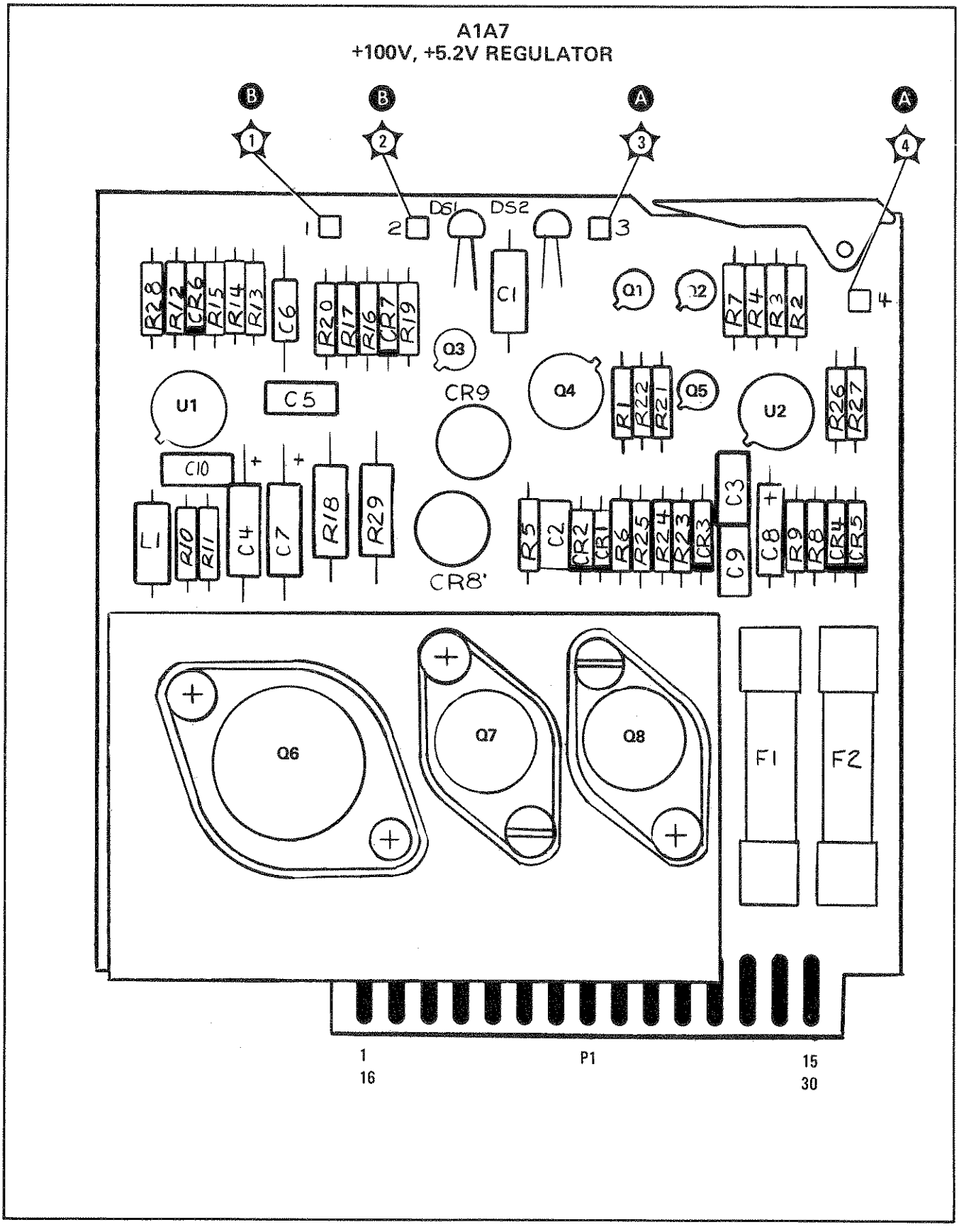

FIGURE 4. A1A7 + 100V, + 5.2V REGULATOR, COMPONENT LOCATIONS

A1A6 ±15V REGULATOR
85662-60101

P1

PIN	SIGNAL	TO/FROM	FUNCTION BLOCK
1	PWR DWN	A1A7	C
19	HPON	A1A7	C
2	+6V UNREG	A1A10	B
20	+6V UNREG	A1A10	B
3	-15V SENSE	A1A10	B
21	-15V SENSE	A1A10	B
4	+100V		B
22	+100V		B
5	+15V		A
23	+15V		A
6	GND		B
24	GND		B
7	CRT DSBL	A4A9	E
25	CRT DSBL	A4A9	E
8	+23V UNREG	A1A10	A
26	+23V UNREG	A1A10	A
9	+15V GND	A1A10	A
27	+15V GND	A1A10	A
10	+15V GND		C
28	+15V GND		C
11	+15V GND		E
29	+15V GND		E
12	+23V UNREG	A1A10	A
30	+23V UNREG	A1A10	A
13	+15V GND		E
31	+15V GND		E
14	+23VF	A1A3	D
32	+23VF	A1A3	D
15	COLLECTOR	A1A3	D
33	COLLECTOR	A1A3	D
16	BASE	A1A3	D
34	BASE	A1A3	D
17	OSC DRIVE	A1A3	E
35	OSC DRIVE	A1A3	E
18	HV FEEDBACK	A1A3	E
36	HV FEEDBACK	A1A3	E

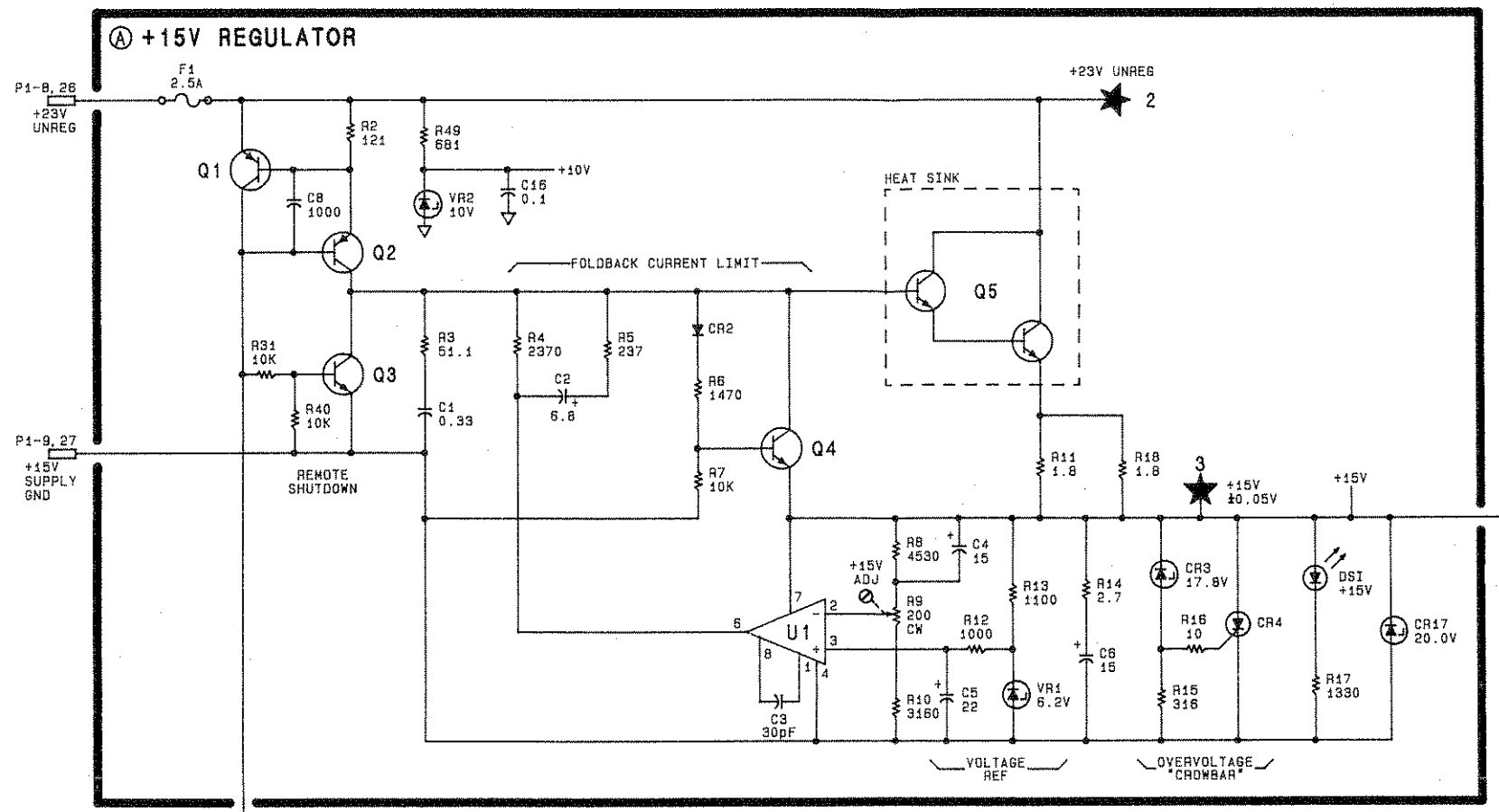

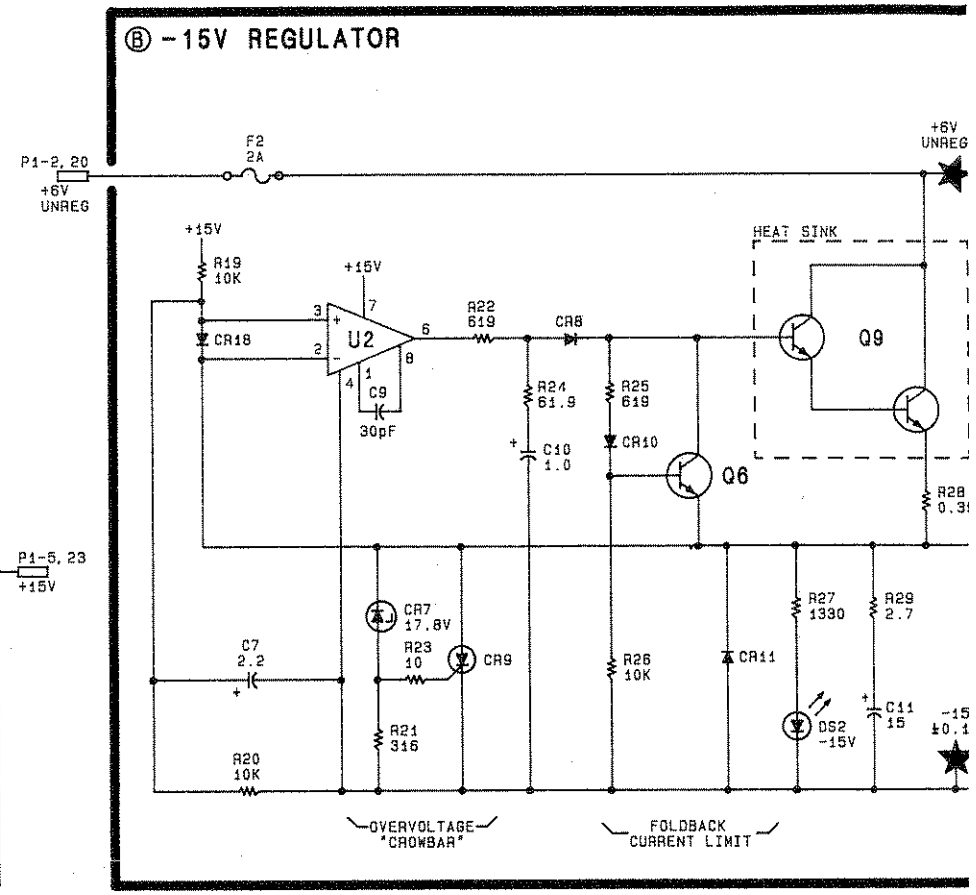

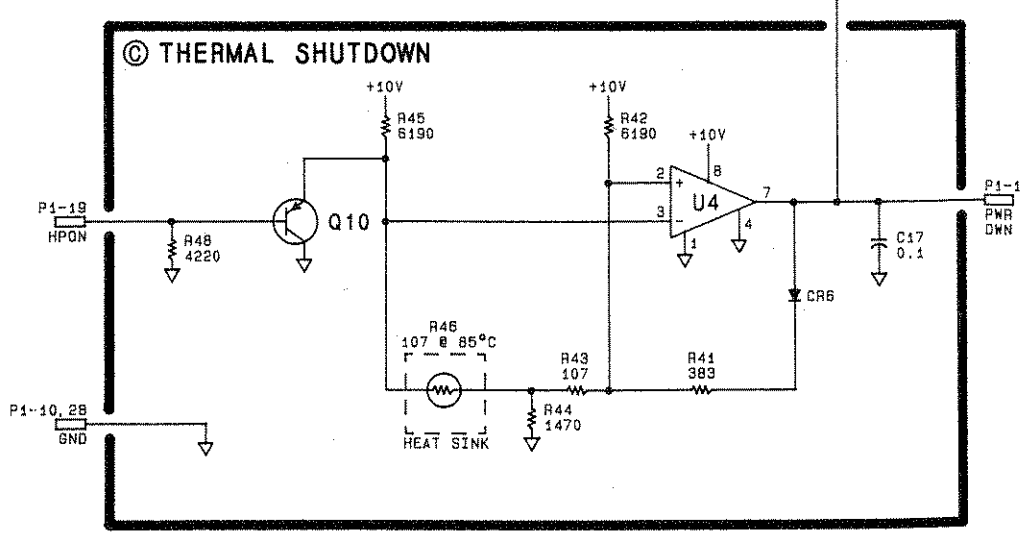

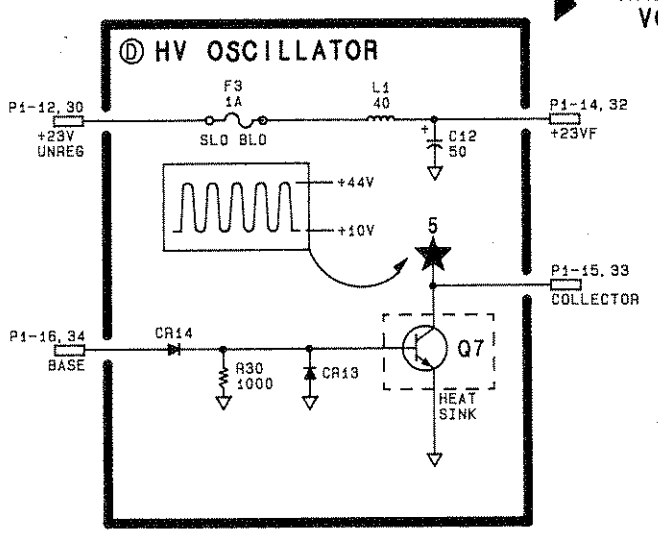

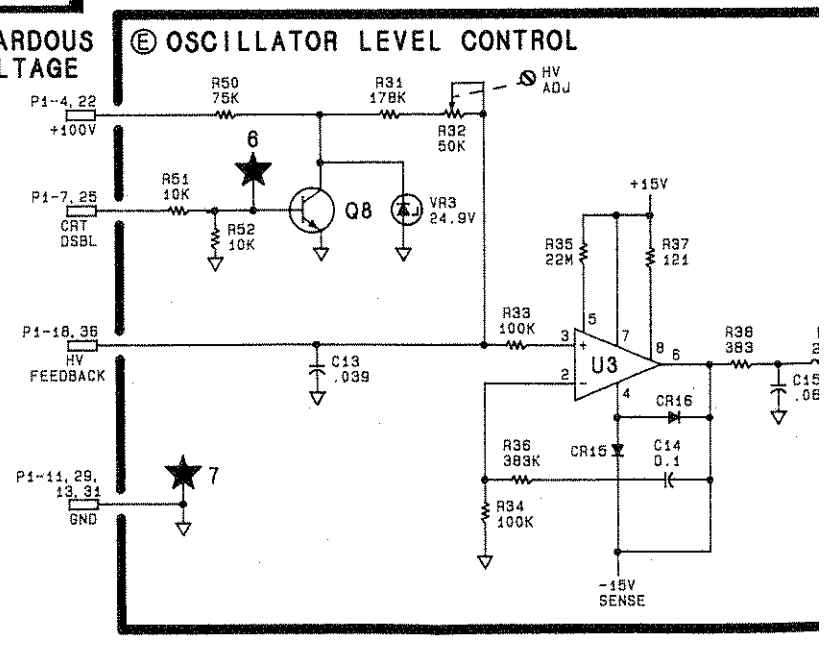

SERIAL PREFIX: 2403A

A1A7 +100V, +5.2V REGULATOR
85662-60052

WARNING
HAZARDOUS VOLTAGE

P1

PIN	SIGNAL	TO/FROM	FUNCTION BLOCK
1	+9V UNREG	NC	
16	+5.2V GND	NC	
2	+5.2V SENSE	P1-5, 20	B
17	+9V UNREG	NC	
3	+9V UNREG	A1A10	B
18	+9V UNREG	A1A10	B
4	+5.2V GND	A1A10	B
19	+5.2V GND	A1A10	B
5	+5.2V	P1-2	B
20	+5.2V	P1-2	B
6	+100V GND	NC	
21	+100V GND	NC	
7	+118V UNREG	NC	
22	+118V UNREG	NC	
8	PWR DWN	A1A6	A
23	PWR DWN	A1A6	A
9	HPON	NC	
24	HPON	NC	
10	+118V UNREG	A1A10	A
25	+118V UNREG	A1A10	A
11	+100V GND	A1A10	A
26	+100V GND	A1A10	A
12	+100V		A
27	+100V		A
13	+15V		C
28	+15V		C
14	NC		
29	NC		
15	NC		
30	NC		

P1-6, 24 GND

P1-3, 21 -15V SENSE

P1-17, 35 OSC DRIVE

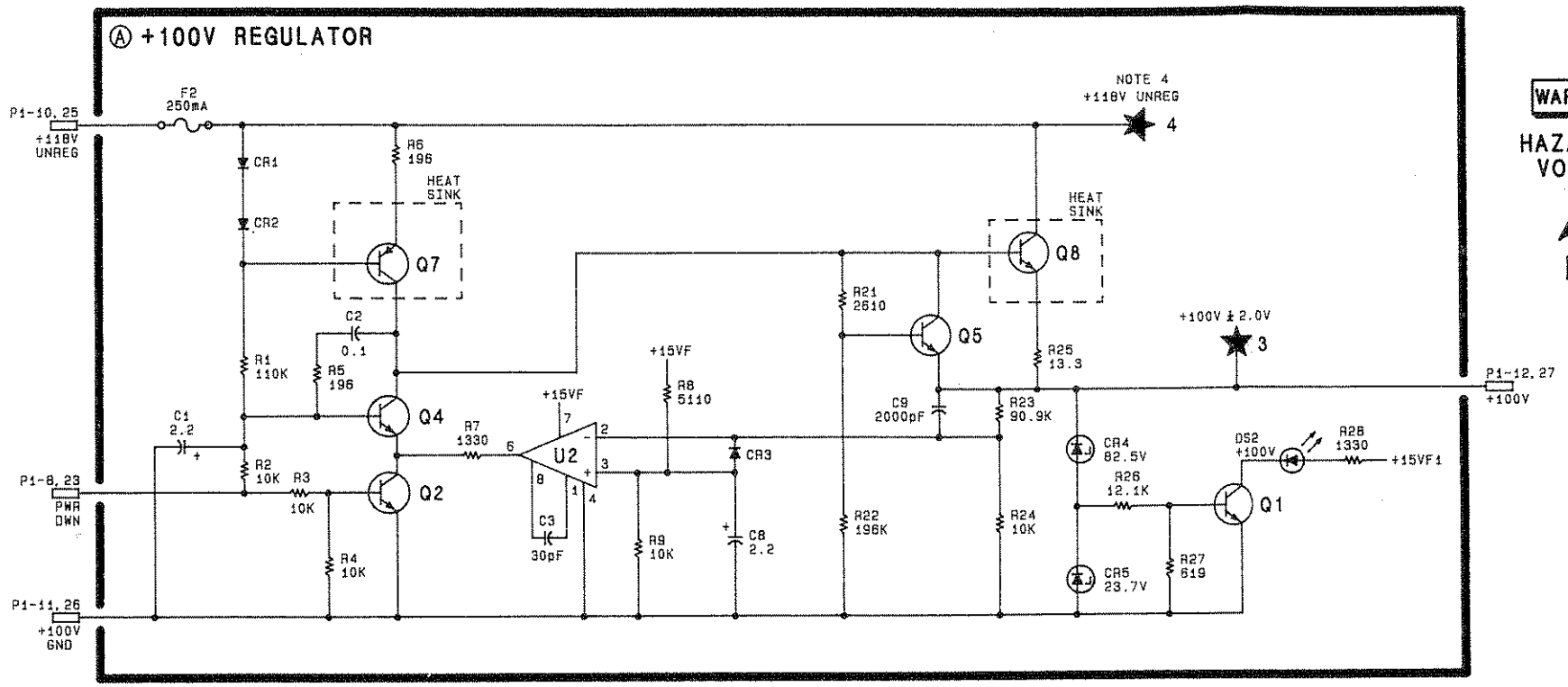

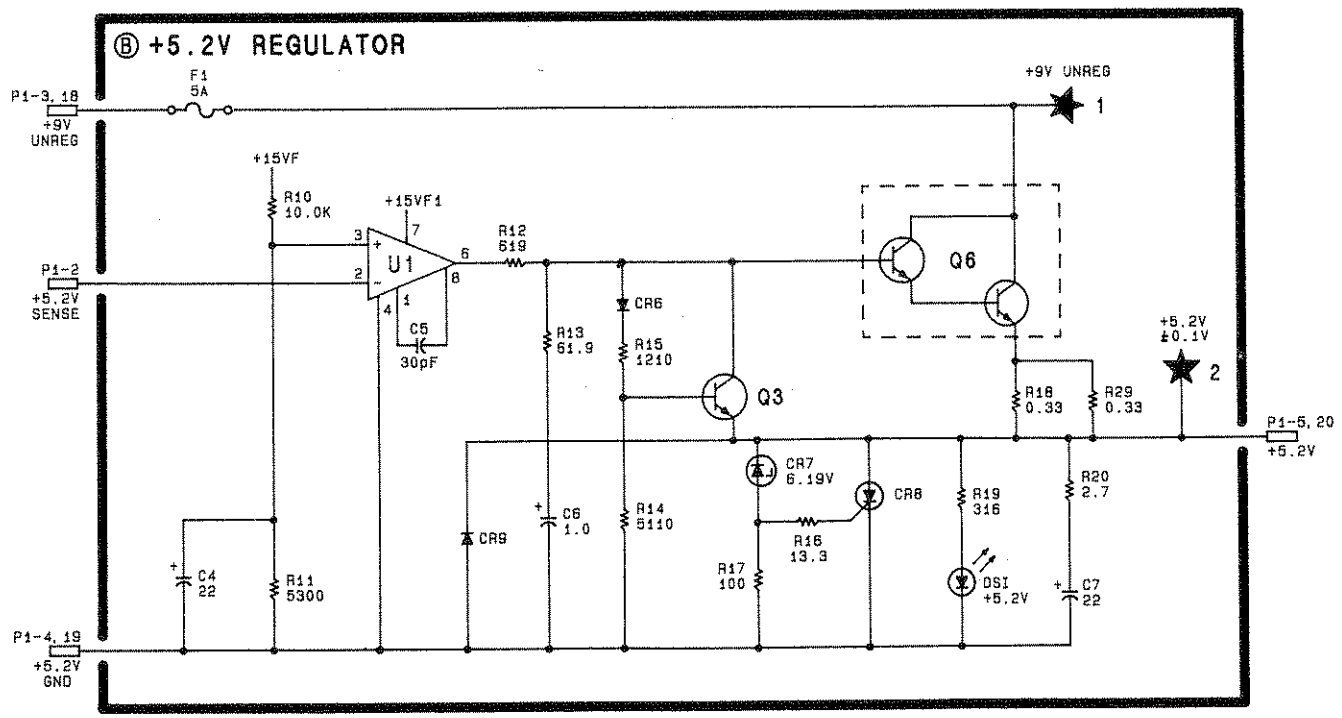

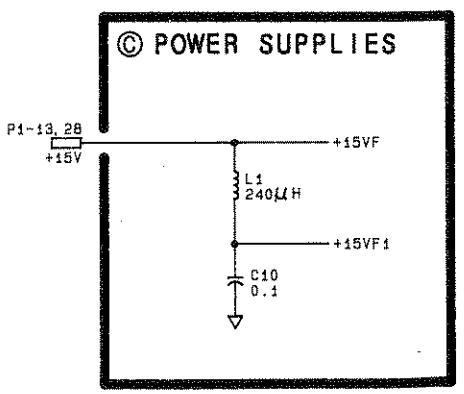

WARNING
HAZARDOUS VOLTAGE

NOTES:

1. REFERENCE DESIGNATORS WITHIN THIS ASSEMBLY ARE ABBREVIATED. FOR COMPLETE REFERENCE DESIGNATION, PREFIX ABBREVIATION WITH ASSEMBLY DESIGNATION.
2. UNLESS OTHERWISE INDICATED: RESISTANCE IS IN OHMS (Ω) CAPACITANCE IS IN MICROFARADS (μF) INDUCTANCE IS IN MICROHENRIES (μH)
3. UNLESS OTHERWISE INDICATED: SIGNALS ENTER AT LEFT SIDE AND EXIT AT RIGHT SIDE OF FUNCTION BLOCKS.

WARNING

4. HAZARADOUS VOLTAGE EXISTS ON THIS BOARD
5. THE TIME CONSTANT OF THE +118V UNREGULATED CIRCUIT IS 25 SECONDS. ALLOW ADEQUATE TIME AFTER THE POWER CORD IS REMOVED FOR THE FILTER CAPACITORS TO DISCHARGE BEFORE SERVICING.

SERIAL PREFIX: 2403A

FIGURE 5. A1A6 ±15V REGULATOR AND A1A7 +100V, +5.2V REGULATOR, SCHEMATIC DIAGRAM

A1A6
A1A7

A1A8 RECTIFIER, CIRCUIT DESCRIPTION

WARNING

Because of the high voltage present in this assembly, servicing should be performed only by qualified personnel.

A1A8 Rectifier contains three bridge rectifiers and one full-wave rectifier to provide unregulated power for the IF-Display Section. External power is supplied to the instrument through Line Module FL1 and Power Transformer A1T1.

+9V UNREG

Full-wave rectifier CR7 and CR8 provides an unregulated +9V to A1A7 +100V, +5.2V Regulator. LED DS1 is lit whenever there is power to the transformer.

Test points TP1 and TP2, when jumpered together, cause HPON to go high, turning on the IF-Display Section in the absence of a signal from the RF Section when power is required for troubleshooting.

The LINE TRIGGER voltage is selected as required by A3A1 Trigger.

+118V UNREG

Bridge rectifier U1 provides an unregulated +118V to A1A7.

WARNING

The time constant of the filter capacitor circuit is about 25 seconds. Before servicing, allow adequate time for discharge after line power cable is removed.

+23V UNREG

The +23V unregulated supply, bridge rectifier CR9 through CR12, includes an overvoltage protection circuit. If line power from a 220V/240V source is applied when the Line Voltage Selector is set to 100V/120V, the overvoltage causes CR6 to conduct, turning on CR5 to blow the fuse in the Line Module.

+5V UNREG

Bridge rectifier CR1 through CR4 provides unregulated +5V and −15V to A1A6 ±15V Regulator.

A1A9 BUS TRANSITION, CIRCUIT DESCRIPTION

A1A9 Bus Transition provides jack J2 (inside front panel) for the 50-wire Instrument Bus, which is routed through the IF-Display Section through a flat ribbon cable W8.

HPON, the IF-Display Section power-on control line (W8 wire 22) is sensed by amplifier Q1 and Q2 to activate fan relay K1, which supplies line power to the cooling fan B1.

The +5.2V supply is connected to the LSTP line (W8 wire 43) through CR1 to halt operation of A15 Controller if there is a supply failure.

TABLE 1. A1A8, REPLACEABLE PARTS

Reference Designation	HP Part Number	C D	Qty	Description	Mfr Code	Mfr Part Number
A1A8	85662-60133	8	1	BOARD ASSEMBLY, RECTIFIER	28480	85662-60133
A1A8C1	0160-4832	4	2	CAPACITOR-FXD .01UF +-10% 100VDC CER	28480	0160-4832
A1A8C2	0160-4298	6	1	CAPACITOR-FXD 4700PF +-20% 250VDC CER	56289	C067F251H472MS22-CDH
A1A8C3	0160-4832	4		CAPACITOR-FXD .01UF +-10% 100VDC CER	28480	0160-4832
A1A8C4	0160-0168	1	2	CAPACITOR-FXD .1UF +-10% 200VDC POLYE	28480	0160-0168
A1A8C5	0160-0168	1		CAPACITOR-FXD .1UF +-10% 200VDC POLYE	28480	0160-0168
A1A8C6	0160-0970	3	1	CAPACITOR-FXD .47UF +-10% 80VDC POLYE	28480	0160-0970
A1A8C7	0180-0197	8	1	CAPACITOR-FXD 2.2UF+-10% 20VDC TA	56289	150D225X9020A2
A1A8CR1	1901-0662	3	10	DIODE-PWR RECT 100V 6A	04713	MR751
A1A8CR2	1901-0662	3		DIODE-PWR RECT 100V 6A	04713	MR751
A1A8CR3	1901-0662	3		DIODE-PWR RECT 100V 6A	04713	MR751
A1A8CR4	1901-0662	3		DIODE-PWR RECT 100V 6A	04713	MR751
A1A8CR5	1884-0018	5	1	THYRISTOR-SCR 2N4186 VRRM=200	04713	2N4186
A1A8CR6	1902-0656	7	1	DIODE-ZNR 39V 5% PD=1W IR=5UA	28480	1902-0656
A1A8CR7	1901-0662	3		DIODE-PWR RECT 100V 6A	04713	MR751
A1A8CR8	1901-0662	3		DIODE-PWR RECT 100V 6A	04713	MR751
A1A8CR9	1901-0662	3		DIODE-PWR RECT 100V 6A	04713	MR751
A1A8CR10	1901-0662	3		DIODE-PWR RECT 100V 6A	04713	MR751
A1A8CR11	1901-0662	3		DIODE-PWR RECT 100V 6A	04713	MR751
A1A8CR12	1901-0662	3		DIODE-PWR RECT 100V 6A	04713	MR751
A1A8DS1	1990-0486	6	1	LED-LAMP LUM-INT=1MCD IF=20MA-MAX BVR=5V	28480	5082-4684
A1A8F1	2110-0007	4	1	FUSE 1A 250V TD 1.25X.25 UL	75915	313001
A1A8R1	0757-0428	3	1	RESISTOR 750 1% .125W F TC=0+-100	24546	C4-1/8-T0-751-F
A1A8R2	0698-3155	1	1	RESISTOR 4.64K 1% .125W F TC=0+-100	24546	C4-1/8-T0-4641-F
A1A8R3	0698-0085	0	1	RESISTOR 2.61K 1% .125W F TC=0+-100	24546	C4-1/8-T0-2611-F
A1A8R4	0698-3152	8	1	RESISTOR 3.48K 1% .125W F TC=0+-100	24546	C4-1/8-T0-3481-F
A1A8R5	0757-0280	3	1	RESISTOR 1K 1% .125W F TC=0+-100	24546	C4-1/8-T0-1001-F
A1A8R6	0757-0367	7	1	RESISTOR 100K 1% .5W F TC=0+-100	28480	0757-0367
A1A8R7	0698-3407	6	1	RESISTOR 1.96K 1% .5W F TC=0+-100	28480	0698-3407
A1A8R8	0698-3447	4	1	RESISTOR 422 1% .125W F TC=0+-100	24546	C4-1/8-T0-422R-F
A1A8TP1	0360-1788	7	2	CONNECTOR-SGL CONT PIN .045-IN-BSC-SZ SQ	28480	0360-1788
A1A8TP2	0360-1788	7		CONNECTOR-SGL CONT PIN .045-IN-BSC-SZ SQ	28480	0360-1788
A1A8U1	1901-0367	5	1	DIODE-FW BRDG 600V 1A	28480	1901-0367
				MISCELLANEOUS PARTS		
	4040-0747	2	1	EXTR-PC BD GRA POLYC .062-BD-THKNS	28480	4040-0747

TABLE 2. A1A9, REPLACEABLE PARTS

Reference Designation	HP Part Number	C D	Qty	Description	Mfr Code	Mfr Part Number
A1A9	85662-60056	6	1	BOARD ASSEMBLY, BUS TRANSITION (INCLUDES W5)	28480	85662-60056
A1A9CR1	1901-0033	2	2	DIODE-GEN PRP 100V 200MA DO-7	28480	1901-0033
A1A9CR2	1901-0033	2		DIODE-GEN PRP 100V 200MA DO-7	28480	1901-0033
A1A9E1	1251-0600	0	2	CONNECTOR-SGL CONT PIN 1.14-MM-BSC-SZ SQ	28480	1251-0600
A1A9E2	1251-0600	0		CONNECTOR-SGL CONT PIN 1.14-MM-BSC-SZ SQ	28480	1251-0600
A1A9J1	1251-5269	7	1	CONNECTOR 50-PIN M POST TYPE	28480	1251-5269
A1A9J2	1251-4432	4	1	CONNECTOR 50-PIN F D SUBMIN	28480	1251-4432
A1A9K1	0490-0618	5	1	RELAY 2C 24VDC-COIL 5A 115VAC	28480	0490-0618
A1A9Q1	1854-0477	7	2	TRANSISTOR NPN 2N2222A SI TO-18 PD=500MW	04713	2N2222A
A1A9Q2	1854-0477	7		TRANSISTOR NPN 2N2222A SI TO-18 PD=500MW	04713	2N2222A
A1A9R1	0698-3157	3	1	RESISTOR 19.6K 1% .125W F TC=0+-100	24546	C4-1/8-T0-1962-F
A1A9R2	0757-0442	9	2	RESISTOR 10K 1% .125W F TC=0+-100	24546	C4-1/8-T0-1002-F
A1A9R3	0757-0442	9		RESISTOR 10K 1% .125W F TC=0+-100	24546	C4-1/8-T0-1002-F

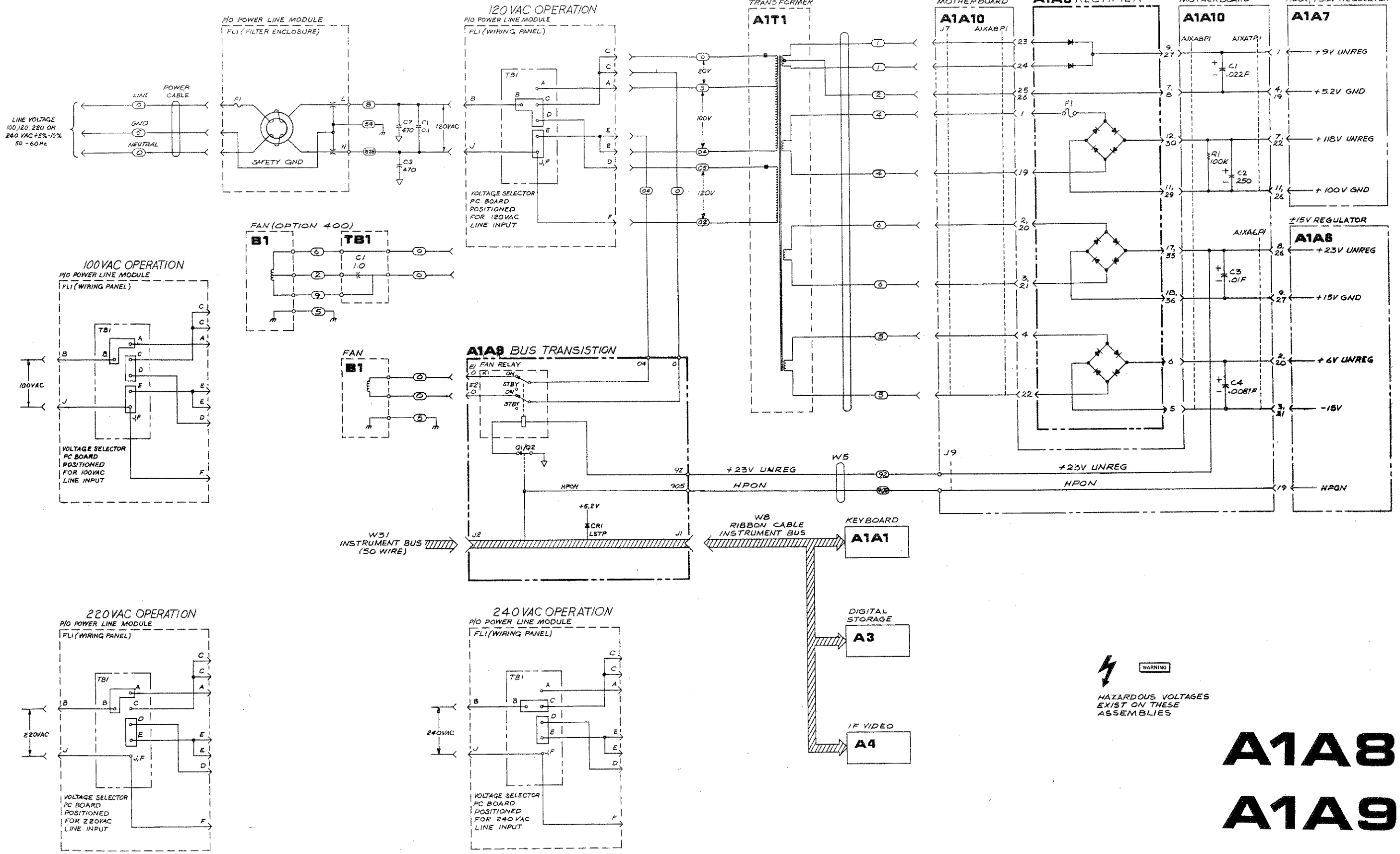

WARNING

HAZARDOUS VOLTAGES EXIST ON THESE ASSEMBLIES

A1A8
A1A9

FIGURE 1. A1A8 RECTIFIER AND A1A9 BUS TRANSITION, BLOCK DIAGRAM

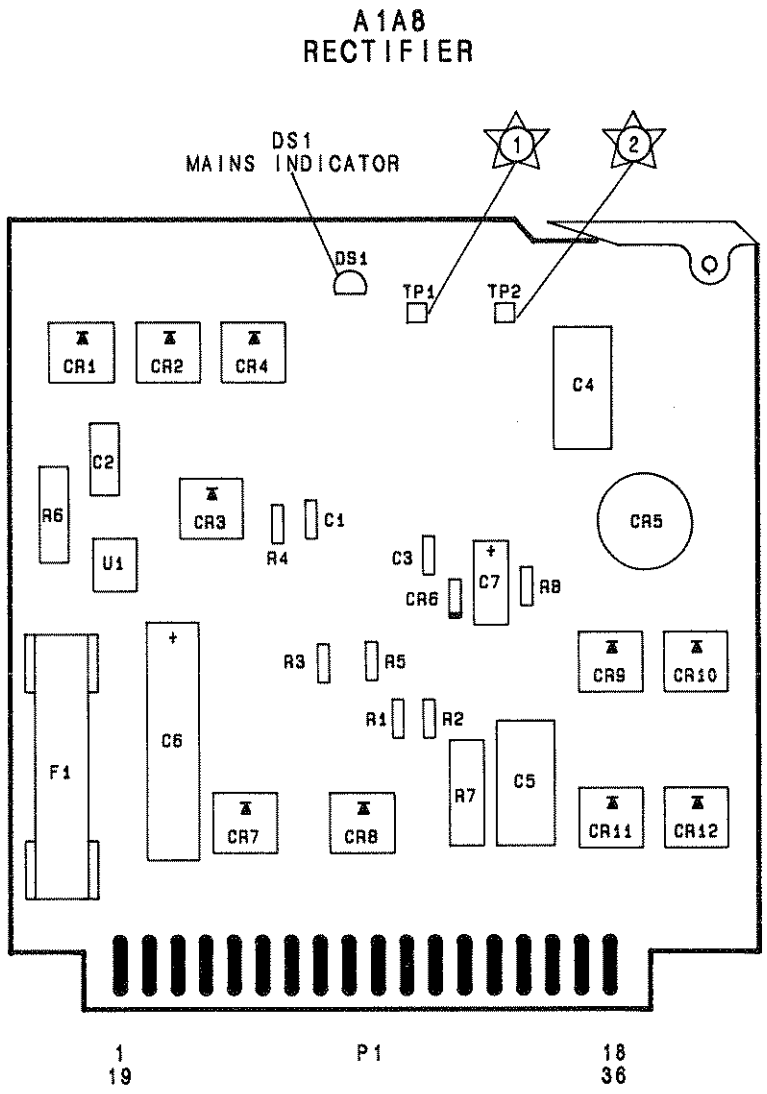

FIGURE 2. A1A8 RECTIFIER, COMPONENT LOCATIONS

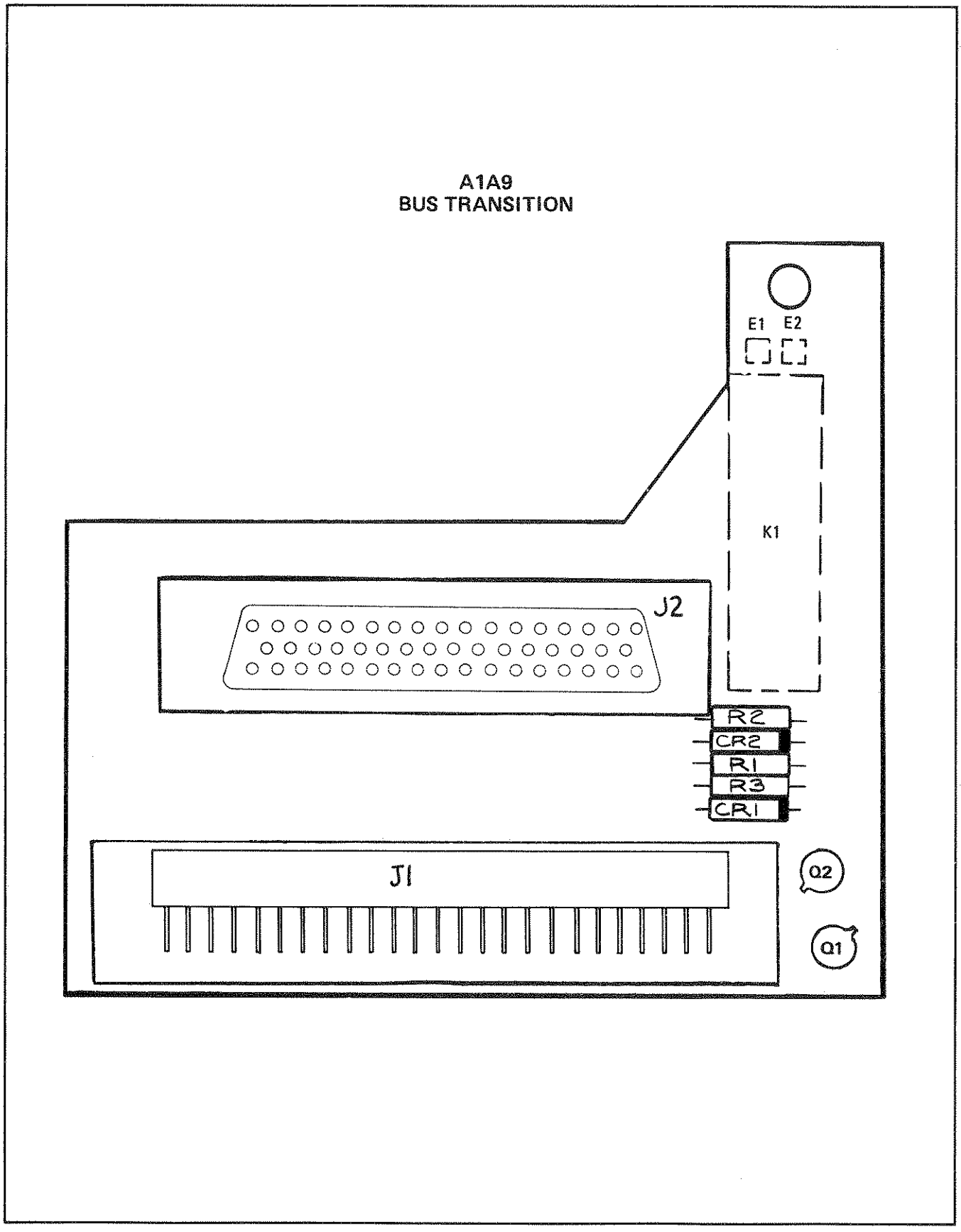

FIGURE 3. A1A9 BUS TRANSITION, COMPONENT LOCATIONS

A1A9 BUS TRANSITION
85662-60056

1 50-WIRE INSTRUMENT BUS

	SIGNAL
	GND
	NC
	IOBØ
	IOB1
	IOB2
	IOB3
	IOB4
	IOB5
	IOB6
	IOB7
	IOB8
	IOB9
	IOB10
	IOB11
	IOB12
	IOB13
	IOB14
	IOB15
	NC
	NC
	NC
	HPON
	ADRØ
	ADR1
	ADR2
	ADR3
	ADR4
	ADR5 (NOT USED)
	NC
	NC
	KR8
	KR9
	KR10
	KR11
	KCØ
	KC1
	KC2
	KC3
	KC4
	KC5
	KC6
	KC7
	LSTP
	HSWP
	LSRQ
	LDSR
	LBIO
	GND
	LTIO
	GND

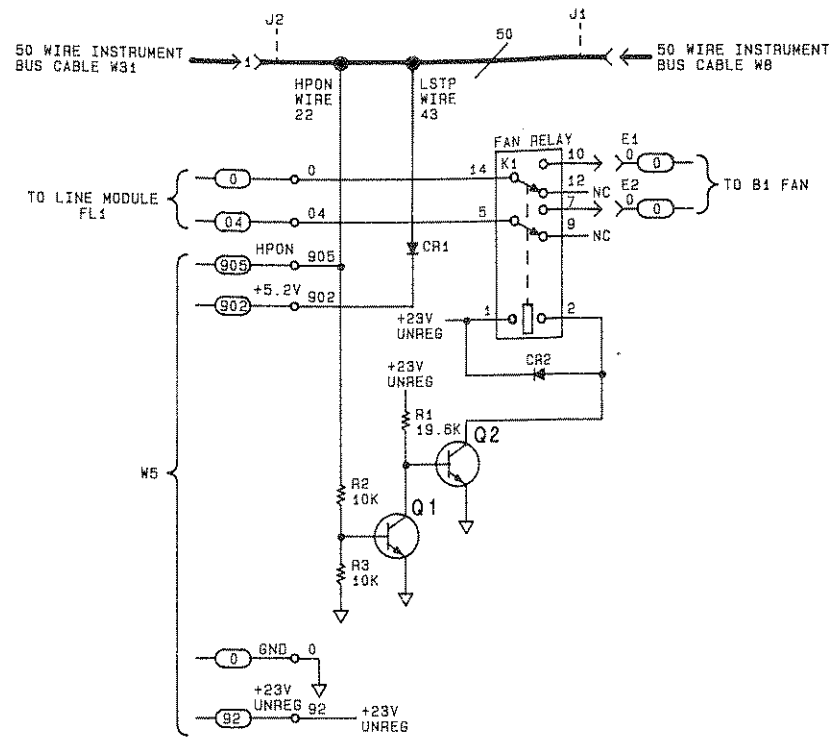

NOTES:

1. REFERENCE DESIGNATORS WITHIN THIS ASSEMBLY ARE ABBREVIATED. FOR COMPLETE REFERENCE DESIGNATION, PREFIX ABBREVIATION WITH ASSEMBLY DESIGNATION.
2. UNLESS OTHERWISE INDICATED:
   RESISTANCE IS IN OHMS (Ω)
   CAPACITANCE IS IN MICROFARADS (μF)
   INDUCTANCE IS IN MICROHENRIES (μH)

WARNING

3. THE TIME CONSTANT OF THE 100V FILTER CAPACITOR CIRCUIT SI 25 SECONDS. ALLOW ADEQUATE TIME AFTER POWER CORD IS REMOVED FOR FILTER CAPACITORS TO DISCHARGE BEFORE SERVICING.
4. MNEMONIC TABLE:

MNEMONIC	DESCRIPTION
HPON	HIGH=DISPLAY POWER ON
LSTP	LOW=STOP PROCESSOR
HSWP	HIGH=SWEEPING
LSRQ	LOW=SERVICE REQUEST
LDSR	LOW=DIGITAL STORAGE READY
LBIO	LOW=RF SECTION I/O STROBE
LTIO	LOW=DISPLAY SECTION I/O STROBE
ADRØ-ADR5	ADDRESS BITS Ø-5
IOBØ-IOB15	DATA BITS Ø-15
KR8-KR11	KEY ROWS 8-11
KCØ-KC7	KEY COLUMNS Ø-7

5. SHORTING TP1 TO TP2 ALLOWS SERVICING OF THE IF DISPLAY SECTION WITHOUT THE RF SECTION BEING CONNECTED.
6. **UNLESS OTHERWISE INDICATED: SIGNALS ENTER AT LEFT SIDE OR TOP AND EXIT AT RIGHT SIDE OR BOTTOM OF FUNCTION BLOCKS.**

ERIAL PREFIX: 2403A

A1A8
A1A9

Figure 4. A1A8 Rectifier and A1A9 Bus Transition, Schematic Diagram

A1A8 RECTIFIER
85662-60133

P1

PIN	SIGNAL	TO/FROM
1 19	YELLOW YELLOW	A1T1
2 20	BLUE BLUE	A1T1
3 21	BLUE BLUE	A1T1
4 22	GREEN GREEN	A1T1
5 23	-15V SENSE BROWN	A1A6 A1T1
6 24	+6V UNREG BROWN	A1A6 A1T1
7 25	+5.2V GND RED	A1A7 A1T1
8 26	+5.2V GND RED	A1A7 A1T1
9 27	+9V UNREG +9V UNREG	A1A7
10 28	NC NC	
11 29	+100V GND +100V GND	A1A7
12 30	+118V UNREG +118V UNREG	A1A7
13 31	NC NC	
14 32	HPON HPON	A1A7
15 33	NC NC	
16 34	LINE TRIGGER LINE TRIGGER	A3
17 35	+23V UNREG +23V UNREG	A1A6
18 36	+15V GND +15V GND	A1A6

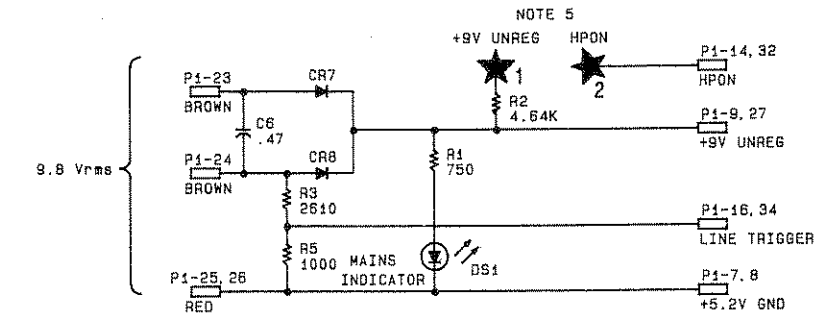

WARNING
HAZARDOUS VOLTAGE

SERIAL PREFIX: 2403A

TABLE 1. A1A10, REPLACEABLE PARTS

Reference Designation	HP Part Number	C D	Qty	Description	Mfr Code	Mfr Part Number
A1A10	85662-60050	0	1	BOARD ASSEMBLY, DISPLAY MOTHERBOARD (INCLUDES W3)	28480	85662-60050
A1A10C1	0180-2808	2	1	CAPACITOR-FXD .022F+-20% 20VDC AL	28480	0180-2808
A1A10C2	0180-2642	2	1	CAPACITOR-FXD 250UF+50-10% 250VDC AL	28480	0180-2642
A1A10C3	0180-2641	1	1	CAPACITOR-FXD .018F+75-10% 40VDC AL	00853	50B183U040EC2A
A1A10C4	0180-0453	9	1	CAPACITOR-FXD 8700UF+75-10% 40VDC AL	28480	0180-0453
A1A10E1	0360-1788	7	8	CONNECTOR-SGL CONT PIN .045-IN-BSC-SZ SQ	28480	0360-1788
A1A10E2	0360-1788	7		CONNECTOR-SGL CONT PIN .045-IN-BSC-SZ SQ	28480	0360-1788
A1A10E3	0360-1788	7		CONNECTOR-SGL CONT PIN .045-IN-BSC-SZ SQ	28480	0360-1788
A1A10E4	0360-1788	7		CONNECTOR-SGL CONT PIN .045-IN-BSC-SZ SQ	28480	0360-1788
A1A10E5	0360-1788	7		CONNECTOR-SGL CONT PIN .045-IN-BSC-SZ SQ	28480	0360-1788
A1A10E6	0360-1788	7		CONNECTOR-SGL CONT PIN .045-IN-BSC-SZ SQ	28480	0360-1788
A1A10E7	0360-1788	7		CONNECTOR-SGL CONT PIN .045-IN-BSC-SZ SQ	28480	0360-1788
A1A10E8	0360-1788	7		CONNECTOR-SGL CONT PIN .045-IN-BSC-SZ SQ	28480	0360-1788
A1A10J1	1200-0508	0	2	SOCKET-IC 14-CONT DIP-SLDR	28480	1200-0508
A1A10J2	1200-0508	0		SOCKET-IC 14-CONT DIP-SLDR	28480	1200-0508
A1A10J3	1251-5815	9	1	CONNECTOR 6-PIN M POST TYPE	28480	1251-5815
A1A10J4	1251-5816	0	3	CONNECTOR 4-PIN M POST TYPE	28480	1251-5816
A1A10J5	1251-5816	0		CONNECTOR 4-PIN M POST TYPE	28480	1251-5816
A1A10J6	1251-3195	4	1	CONNECTOR 4-PIN M POST TYPE	28480	1251-3195
A1A10J7	1251-4281	1	1	CONNECTOR 9-PIN M POST TYPE	28480	1251-4281
A1A10J8	1251-5817	1	1	CONNECTOR 2-PIN M POST TYPE	28480	1251-5817
A1A10J9	1251-5816	0		CONNECTOR 4-PIN M POST TYPE	28480	1251-5816
A1A10R1	0757-0367	7	1	RESISTOR 100K 1% .5W F TC=0+-100	28480	0757-0367
A1A10W1	8150-2829	2	1	WIRE 18AWG BK 300V PVC 19X30 105C	28480	8150-2829
A1A10W2	8150-3246	9	1	WIRE 18AWG W/R 300V PVC 19X30 105C	28480	8150-3246
A1A10A1XA1				NOT ASSIGNED		
A1A10A1XA2	1251-2035	9	1	CONNECTOR-PC EDGE 15-CONT/ROW 2-ROWS	28480	1251-2035
A1A10A1XA3	1251-2034	8	1	CONNECTOR-PC EDGE 10-CONT/ROW 2-ROWS	28480	1251-2034
A1A10A1XA4-A1A10A1XA7				NOT ASSIGNED		
A1A10A1XA8	1251-2026	8	2	CONNECTOR-PC EDGE 18-CONT/ROW 2-ROWS	28480	1251-2026

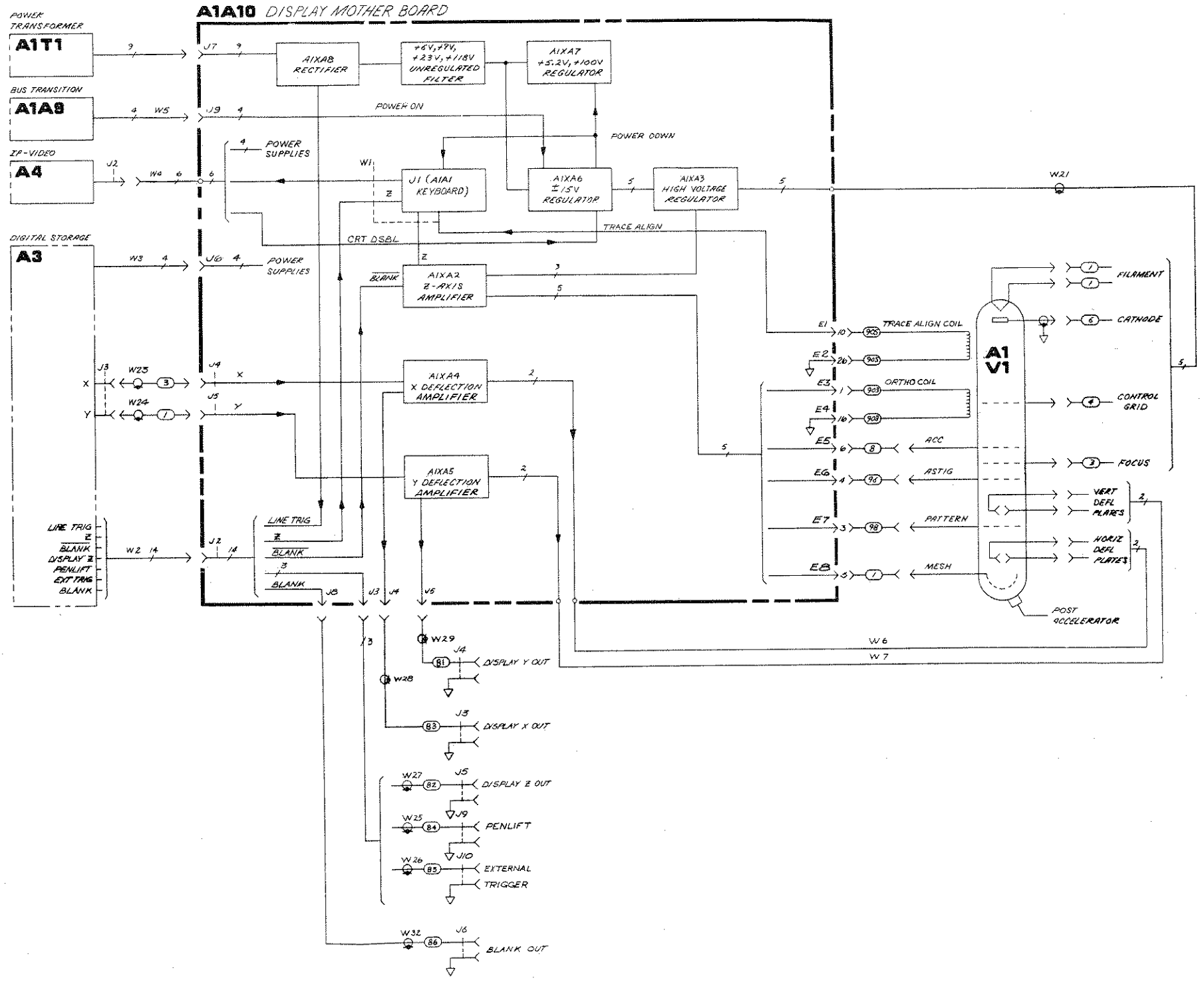

A1A10

FIGURE 1. A1A10 DISPLAY MOTHERBOARD, BLOCK DIAGRAM

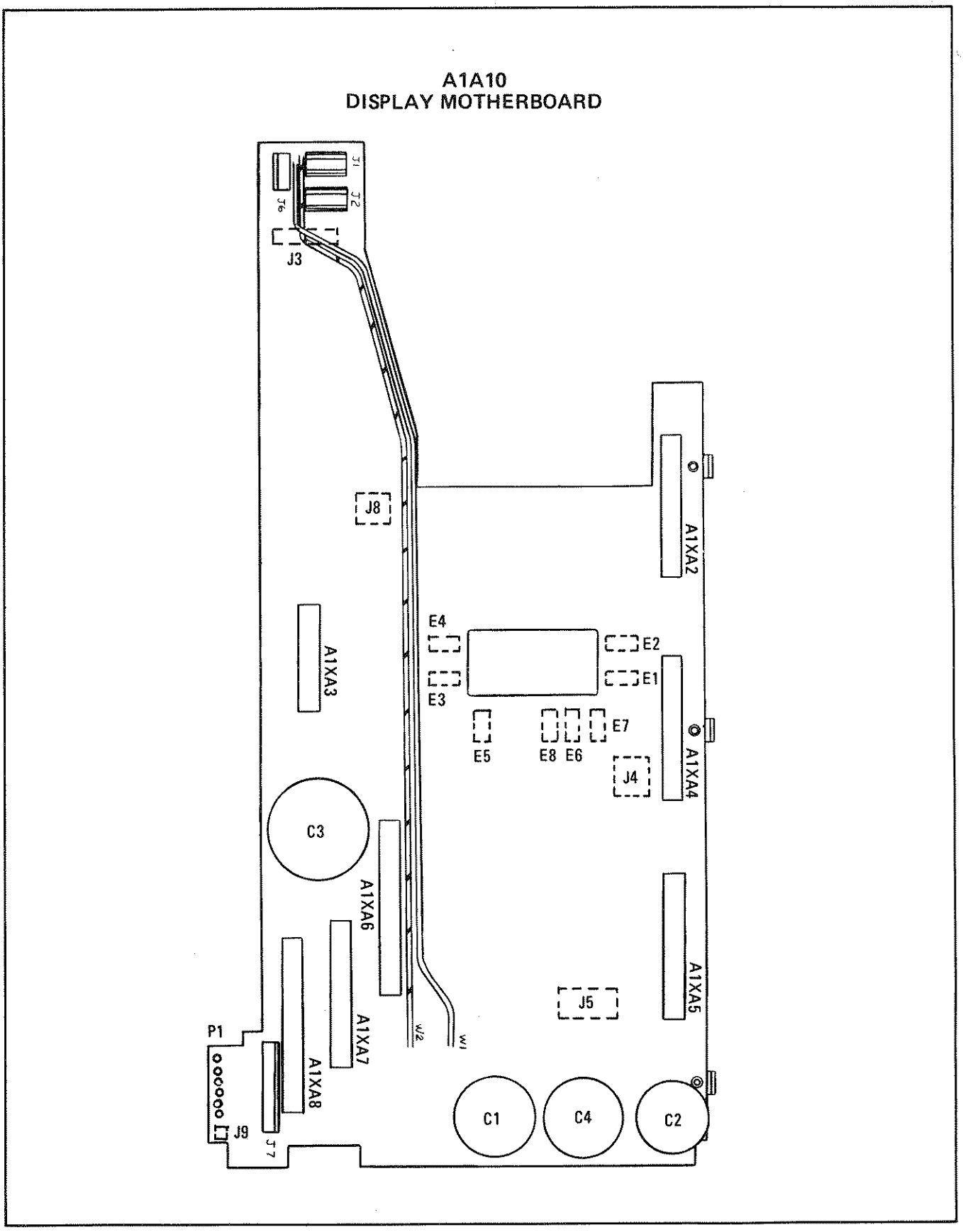

FIGURE 2. A1A10 DISPLAY MOTHERBOARD, COMPONENT LOCATIONS

NOTES:

1. REFERENCE DESIGNATORS WITHIN THIS ASSEMBLY ARE ABBREVIATED. FOR COMPLETE REFERENCE DESIGNATION, PREFIX ABBREVIATION WITH ASSEMBLY DESIGNATION.
2. UNLESS OTHERWISE INDICATED:
   RESISTANCE IS IN OHMS (Ω)
   CAPACITANCE IS IN MICROFARADS (μF)
   INDUCTANCE IS IN MICROHENARIES (μH)

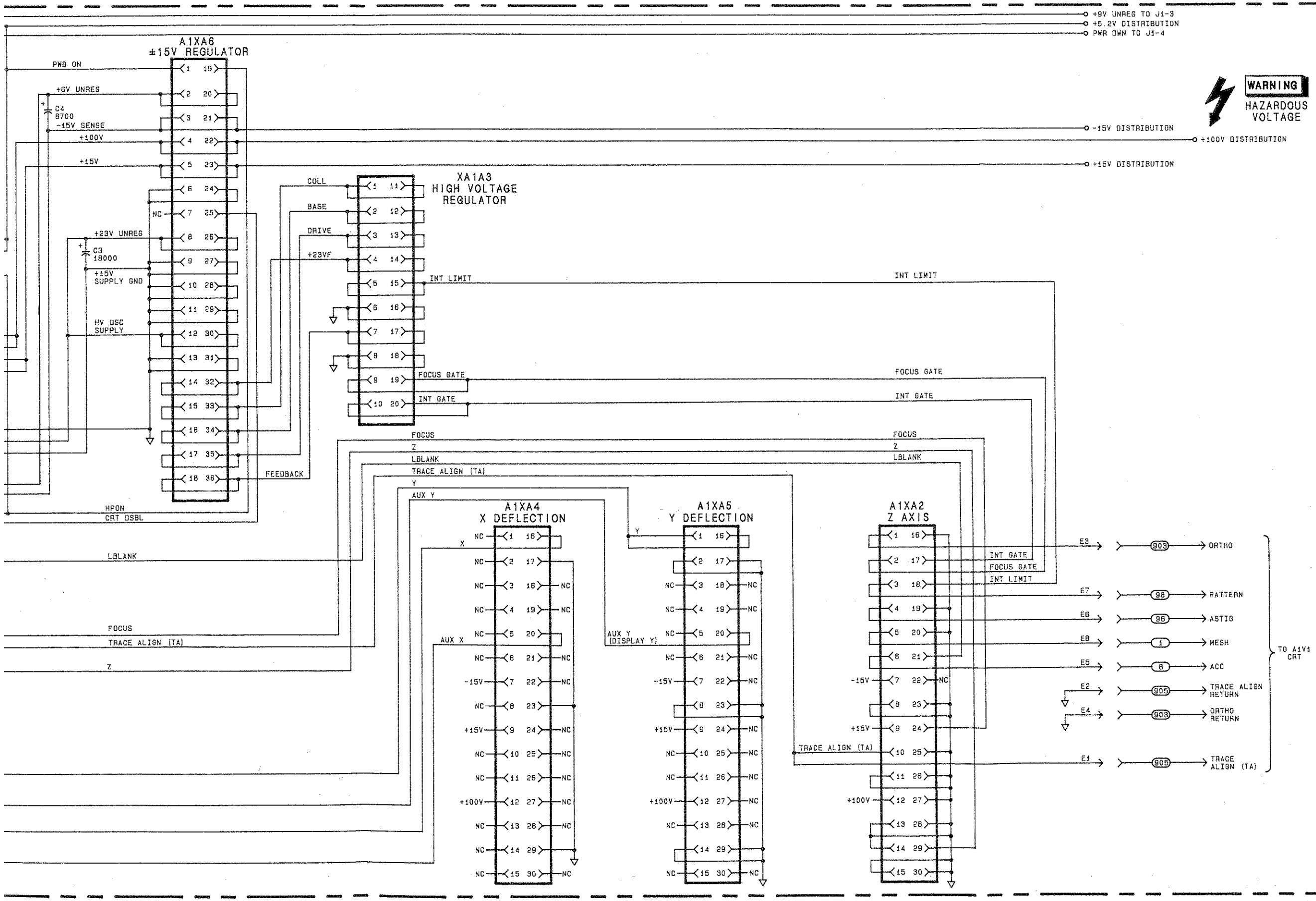

A1A10

FIGURE 3. A1A10 DISPLAY MOTHERBOARD, SCHEMATIC DIAGRAM

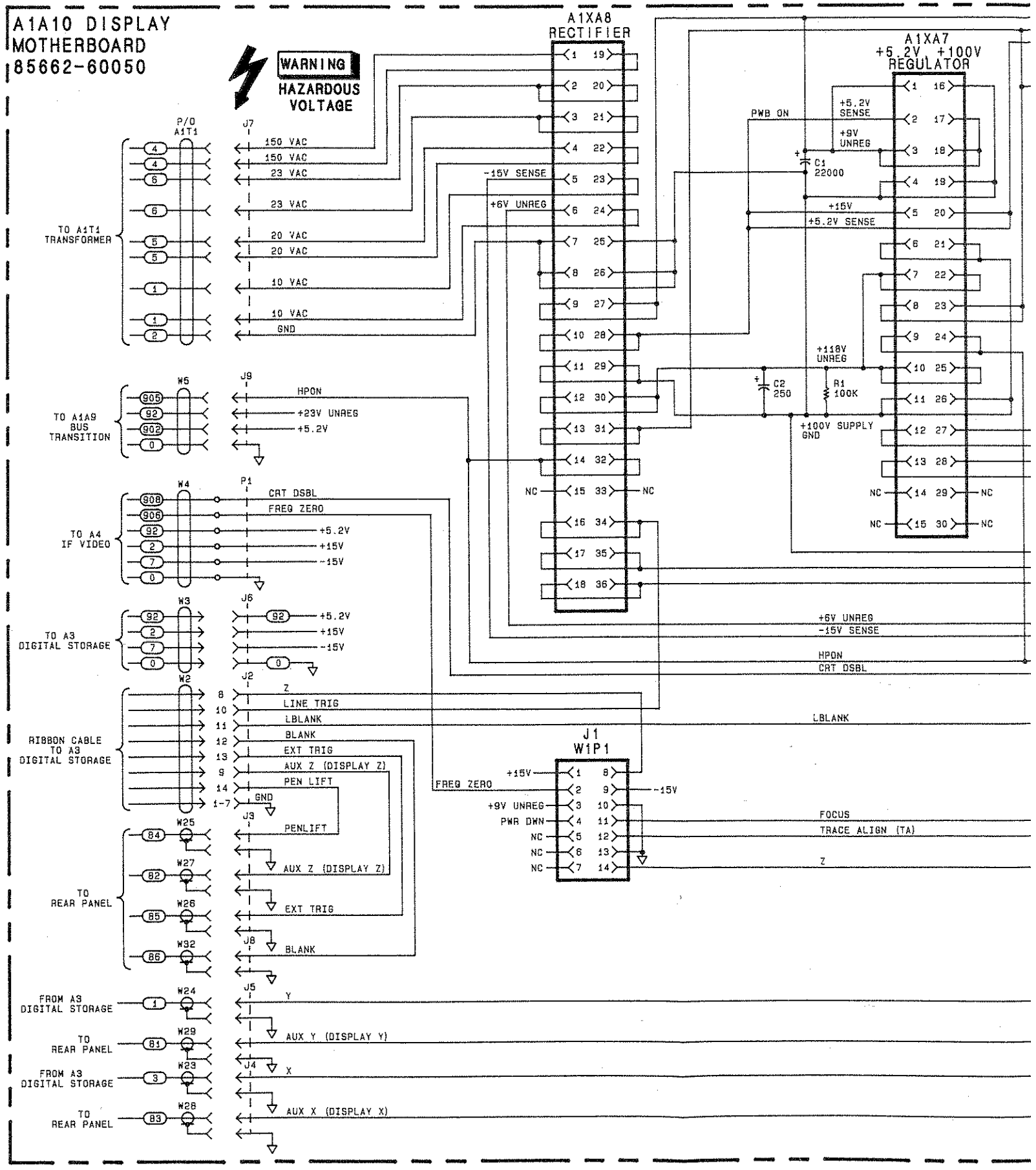

SERIAL PREFIX: 2403A

A3 DIGITAL STORAGE, CIRCUIT DESCRIPTION

A3 Digital Storage consists of three sections:

- **Input Section:** A3A8 Analog-Digital Converter and A3A9 Track and Hold. This section receives the video and sweep signals, converts them to digital, and transfers the data to the Processor Section.
- **Processor Section:** A3A4 Memory, A3A5 Data Manipulator, A3A6 Main Control, and A3A7 Interface. This section handles all data transfers, data functions, and control for the data storage. The digital storage algorithm is contained in read-only memory (ROM) in A3A6 Main Control.
- **CRT Driver Section:** A3A1 Trigger, A3A2 Intensity Control, and A3A3 Line Generator. This section, under control of the Processor Section, generates beam control signals (X, Y, and Z) to display the memory data.

A3 DIGITAL STORAGE, TROUBLESHOOTING

The troubleshooting information in this section is organized in the following manner.

Digital Storage Failure Tests
Description of two tests that can be performed to isolate failures in the Digital Storage section.

Failure Analysis and Testing Sequence
Analysis of the results of the two Digital Storage Failure Tests, and a recommended testing sequence of Digital Storage Assemblies.

Digital Storage Signature Analysis/CRT Display Test Programs
In-depth description of test programs used to troubleshoot the Digital Storage Section. (This material is supplementary. It is not needed for most troubleshooting.)

A3 Digital Storage Block Diagram
Overall block diagram for Digital Storage Section, including mnemonics.

DIGITAL STORAGE FAILURE TESTS

1. INSTRUMENT CHECK LED: The left INSTR CHECK LED (CHECK LED I) remaining on after Instrument Preset is pushed indicates that a bad bit was detected when the analyzer performed its self check routine. This check routine writes and reads to the read-write memory (RAM) in Digital Storage. To activate this test, press Instrument Preset.

2. DIGITAL STORAGE TEST PATTERN: The test pattern shown in Figure 1 can be used to verify the existence of a failure. This pattern can be generated independently of the main processor in the RF Section (A15 Controller). To enable the test pattern:

   a. Jumper A3A6TP3 and A3A6TP6. (Turns on the test ROMs.)

   b. Push A3A7S1 to initialize.

   If troubleshooting without the RF Section or with the Analyzer Bus Interconnect cable W31 disconnected, A1A8TP1 and A1A8TP2 must be jumpered to turn on the power supplies.

   If the CRT remains blank, A1A6TP6 and A1A6TP7 may have to be jumpered to inhibit the CRT disable line controlled by the A15 Controller.

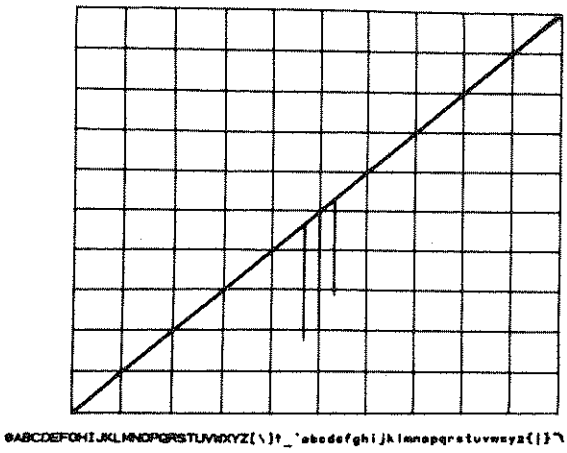

FIGURE 1. DIGITAL STORAGE TEST PATTERN

FAILURE ANALYSIS AND TESTING SEQUENCE

INSTR CHECK LED I and the Digital Storage test pattern can be used together to determine in what area of the Digital Storage Section a failure exists. See "Digital Storage Failure Tests." Failure symptoms (and trouble-shooting information for each) are as follows:

TABLE 1. DIGITAL STORAGE FAILURE ANALYSIS

	Correct Test Pattern	Incorrect/No Test Pattern
CHECK LED I ON	See (2)	See (1)
CHECK LED I OFF	See (4)	See (3)

1. If INSTR CHECK LED I remains on and no test pattern can be obtained, the Digital Storage processor must be checked, starting with the A3A6 Main Control assembly. Perform the following sequence of signature analysis tests.

NOTE

For all of the following tests, except the System ROMs Check, A3A6TP3 and A3A6TP6 must be jumpered to turn on the test ROMs and disable the normal system ROMs.

Control Board Outputs and Test ROMs Check	A3A6 SHEET 1/2
System ROMs Check	A3A6 SHEET 2/2
Decoder Check	A3A7 SHEET 1/2
A3A5 (Data Manipulator) Verification	A3A5 SHEET
IOB Interface Check	A3A7 SHEET 2/2
Memory Check	A3A4
Test B Check	A3A2
Test B Check and Test A Check	A3A6 SHEET 2/2
Test A Check and ADC Check	A3A8
Line Generator	A3A3
Intensity Control	A3A2
CRT Deflection Circuitry	A1A2, A1A4, A1A5
DS Address Check	A3A7 SHEET 1/2
A15 Controller I/O	A15

2. If INSTR CHECK LED I remains on but the test pattern is correct, first check the following:

IOB Interface	A3A7SHEET 2/2
Memory	A3A4
DS Address	A3A7 SHEET 1/2
System ROM	A3A6 SHEET 2/2
A15 Controller I/O	A15

3. If INSTR CHECK LED I is off but the test pattern is incorrect, first check the A3A3 Line Generator and A3A2 Intensity Control before checking the entire Digital Storage Processor.

4. If INSTR CHECK LED I is off and the test pattern is correct, but the CRT and characters come up incorrectly after a normal Instrument Preset, check the System ROMs first. A "long POP" check of the A15 Controller in the RF Section should also be performed.

DIGITAL STORAGE SIGNATURE ANALYSIS/CRT DISPLAY TEST PROGRAMS

NOTE

For all tests, unless otherwise specified: Test Point A3A6TP3 must be jumpered to A3A6TP6. This turns on the Test ROMs. After all jumpers for a test are connected, momentarily push switch A3A7S1 to initialize.

THE LEFT INSTRUMENT CHECK LED SHOULD REMAIN ON WHEN THE TEST ROMS ARE ENABLED AND INSTRUMENT PRESET IS PUSHED.

Test Pattern:

Generates a test pattern with graticule, a diagonal line, characters, and three vertical lines representing the ADC converter outputs of the negative peak, sample, and positive peak detectors.

The IOB Interface circuitry and the System ROM are not used in generating the Test Pattern.

Free Run Check:

A3A6E1 removed: disables feedback from the program ROM to the Branch Length Adder.
A3A6TP8 grounded: disables qualifier feedback.
A3A6TP5 grounded: disables interrupt and return inputs to the State Machine Controller. The BS (Block Switch) line is forced to toggle at a 4 MHz rate.

The program addresses decrements in a binary sequence through all possible addresses with the BS line toggling at 4 MHz, SØ at 2 MHz, S1 at 1 MHz, etc. This checks the A3A6 Main Control assembly, its ROM, Pipeline Registers, flip-flops and control pulses outputs, and the A3A7 I/O Port Decoder. To check the System ROMs, the same test setup is used but the A3A6TP3 to A3A6TP6 jumper is removed to re-enable the System ROMs outputs.

This test requires that the 8 MHz clocks, CLK and LCLK, and the initialize signal, LTON from A3A7, be working.

This test also requires that a basic "kernel" be running. This includes part of the State Machine Control **(F)** and the loop consisting of the Link Register, State Register, and Branch Length Adder on A3A6. See A3A6 Main Control Troubleshooting to troubleshoot this circuitry.

Test Program 1:

A3A6TP8 grounded: disables qualifier feedback.
A3A6TP7 grounded: forces state machine interrupt high.
A3A5TP2 grounded: disables the Register RAM outputs.

This program generates the pattern to test the A3A5 Data Manipulator, its Accumulator, Control Decode logic, Pipeline Registers, and parts of its ALU, Constant ROM, and Multiplexer Bus Drivers. This is the test that exercises the Digital Storage Bus with all feedback from it disabled.

Test Program 2:

A3A6TP8 grounded: disables qualifier feedback.
A3A6TP7 grounded: forces state machine interrupt high.

This program is the same as Test Program 1 except that the Register RAM outputs are enabled on the A3A5 Data Manipulator assembly. Since there is now feedback from the Accumulator through the Register RAM, a bad bit will make all higher order bits appear bad; so when probing the bus lines, the low order bits should be verified first and then higher order ones. The program generates various patterns that are written into and read from register RAM location Ø; it also selects all the qualifier inputs on A3A7 in both a low and a high state; and it exercises all the bits in the branch length word on the A3A6 Main Control assembly.

This program is used to verify the Branch Length Adder on A3A6 Main Control assembly when A3A6E1 jumper is replaced. On A3A5 it tests the Register RAM, ALU A inputs, and the multiplexer inputs from the RAMs. And finally, it checks the qualifier select circuitry on A3A7, so that the qualifier feedback can be used in generating the following test programs.

Test Program 3:

A3A7TP6 grounded: test qualifier bit read by program.
A3A2R12 LL FULL CW: the long line threshold on A3A2 is adjusted fully clockwise so that the normal interrupt, INTR, is always a 20 μsec period, independent of the line generator.

This program uses the Register RAM location Ø and the qualifier verified in Test Program 2 to generate a complete pattern test of all the Register RAM locations and Constant ROM words on A3A5. A pattern is also output to the X and Y line generator registers on A3A3. The program does not read any input ports; Multiplexer Bus Drivers on A3A5 are the only talkers on the Digital Storage data bus. However, a hard failure on the bus will be fed back into the A3A5 Data Manipulator and appear to make all signatures incorrect. In this case, Test Program 1 must be used.

Test Program 4:

A3A7TP6 jumpered to A3A7TP3: test qualifier bit
A3A2R12 LL FULL CW

This is the overall check program used to test all the Digital Storage input ports. The program generates the signals to check the memory, IOB data, IOB address, LTSTA, LTSTB, and ADC inputs on the bus. For each input, a clock is selected corresponding to each input putting data on the bus. This is done by positioning the jumper plug at the proper position in the IC socket A3A7J1. For example, to check Memory, the jumper is put at pin 3, connecting pin 3 to pin 12. The clock then appearing on A3A7TP1 is used by the Signature analyzer to check the data coming only from the A3A4 Memory Assembly, and is independent of data from the other input ports.

This program requires that the A3A5 Data Manipulator assembly be working and the Digital Storage bus be good. As in Test Program 3, a hard failure on the Digital Storage bus on the A3A4 Memory assembly, for example, would make all signatures appear incorrect and require using Test Program 1 to check the bus.

Test Program 5:

A3A7TP6 jumpered to A3A7TP4: test qualifier bit
A3A2R12 LL FULL CW
A3A1 removed

This program is used to generate a simple ramp waveform for the X and Y Line Generators and also to generate simple repetitive control signals to the A3A9 Track and Hold assembly. It is also used to check the Buffer on the A3A5 Data Manipulator assembly. The X and Y ramp waveforms are 20 msec long when A3A2R12 is fully CW (long line) and 5 msec long when A3A2R12 is fully CCW (short line). See A3A9 Troubleshooting for a diagram of the A3A9 control signals. A3A1 is removed to let the HSWP line go high, for A3A9 troubleshooting.

Test Program 6:

A3A7TP6 jumpered to A3A6TP2: test qualifier bit
A3A2R12 LL FULL CW
A3A1 removed

This program is almost identical to Test Program 5, except that the HOLD line to A3A9 is normally high, going low to reset the hold capacitor and peak detectors only every 80 msec. This can be used to check hold times. In addition, the CRT trace will be in the blink mode, blinking once a second.

Figure 2 shows the CRT displays for the various Test Programs. They are not meant to verify that each test is running correctly, but rather to assure you that the test program is cycling. With caution, they can also be used to do some short-cutting in the overall Digital Storage troubleshooting procedure.

For example, the memory check, the IOB interface checks, the ADC check, Test A and Test B checks should not be done if the Test Program 4 trace is not on the CRT. On the other hand, if the traces for Test Programs 3, 4, and 5 appear correct, then the Main Control and Data Manipulator checks could be temporarily bypassed and the memory or IOB interface checks performed. (However, if these checks have bad inputs or the fault cannot be found, then the A3A6 Main Control and A3A5 Data Manipulator assemblies must be verified as shown in the complete Digital Storage troubleshooting procedure.)

TEST PROGRAM 3

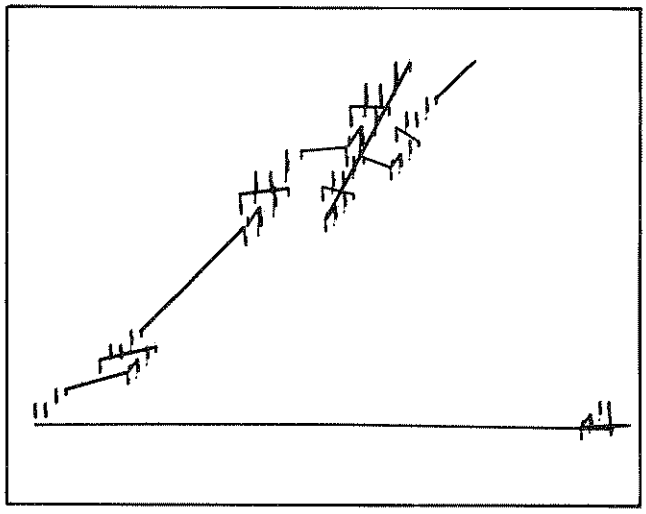

TEST PROGRAM 4

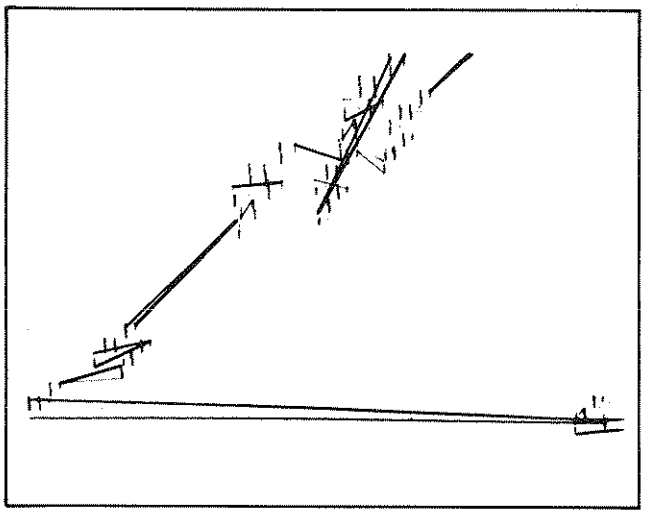

TEST PROGRAMS 5 & 6

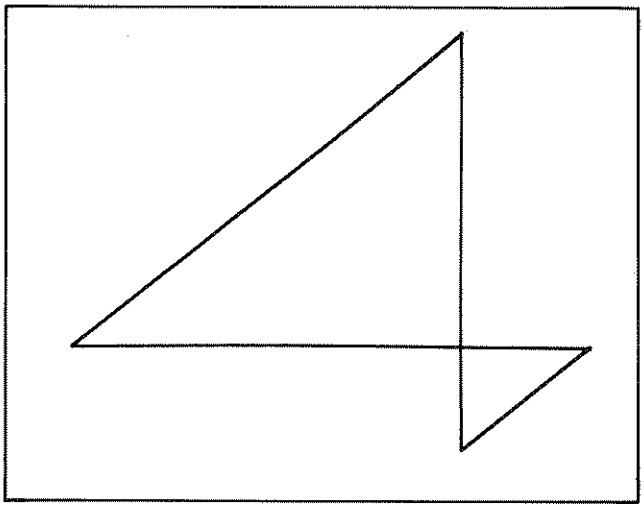

FIGURE 2. DIGITAL STORAGE TEST PROGRAM CRT DISPLAYS

TABLE 2. A3 DIGITAL STORAGE MNEMONIC TABLE

Mnemonic	Description	Mnemonic	Description
18.4MHZ LO	18.4 MHz Local Oscillator Signal	LDRMP	Load Ramp Register
1MHZ	1 MHz ADC Clock	LDSR	LOW = Digital Storage Ready
21.4MHZ	21.4 MHz IF Signal	LDX	Load X Position Register
3MHZ	3 MHz IF Signal	LDY	Load Y Position Register
A LOG	Log Expand Control	LFSEN	LOW = Fast Sweep Enable
AØ – A11	Accumulator Bus Bits Ø through 11	LG1Ø	Linear Gain Controls
A1ØdB	Attenuation Controls	LG2Ø	
A2ØdB		LGCLK	200 kHz Line Generator Clock
A2dB		LGX	Line Generator Horizontal Signal
A4dB		LGY	Line Generator Vertical Signal
A8dB		LINCRSA	Increment Stroke Address
ADRØ	Instrument Bus Address Bits Ø through 3	LINTG	LOW = Integrator Control
ADR3		LL	Long Line
AUX BLANK	Auxiliary Blanking Output	LLGBLANK	LOW = Line Generator Blanking Control
AUX Z	Auxiliary Z Axis Output	LLL	LOW = Long Line
AVdB	Attenuation Control	LMEMEN	LOW = Enable Memory Output
B LOG	Log Expand Control	LOG/LIN	Log/Linear Control
BØ – B11	Digital Storage Bus Data Bits Ø through 11	LQ	LOW = Selected Qualifier
BLØ – BL6	Branch Length Bus Bits Ø through 6	LROMEN	LOW = ROM Enable
BLINK	Blink CRT Display Control	LRSTO	LOW = Reset Trigger Occurred
BRIGHT	Bright CRT Display Control	LRTN	LOW = Enable Interrupt Return
BS	Block Switch Control	LRTRC	LOW = Retrace Signal
BW5	Bandwidth Controls	LTIO	LOW = IF-Display Section I/O Strobe
BW63		LTON	LOW = Turn On
BW68		LTSTA	LOW = Input Test A Data
BW7		LTSTB	LOW = Input Test B Data
CE	Memory Chip Enable	LWRITE	Memory Write Control
CHAR	Character Mode Display Control	LZERO	Output of Zero Check on ALU Result
CLK	8 MHz System Clock	MAØ – MA11	Memory Address Bus Bits Ø through 11
CRT DSBL	CRT Disable Control	NSØ – NS7	Next State Bus Bits Ø through 7
ΔX	Delta X Position	OS1Ø	Offset Gain Controls
ΔY	Delta Y Position	OS2Ø-1	
DIM	Dim CRT Display Control	OS2Ø-2	
DOTEN	Dot Enable	PENLIFT	Recorder PENLIFT Control
FØ – F11	Function Bus Bits Ø through 11	POS	Sign of ALU Results
FCØ – FC3	Data Manipulator Function Control Bits Ø thru 3	PSØ – PS3	I/O Port Selection Bits Ø through 3
FREQ ZERO	Frequency Zero Control	QSØ – QS3	Qualifier Selection Bits Ø through 3
FS	Fast Sweep Mode	RØ – R11	Ram Bus Bits Ø through 11
FSOUT	Fast Sweep Output	RBWA	Resolution Bandwidth Controls
FSZ	Fast Sweep Z Axis	RBWB	
HLDX	Hold X Position (Sample and Hold Control)	RBWC	
HLDY	Hold Y Position (Sample and Hold Control)	RBWD	
HOLD	Track and Hold Control	REC CAL	Recorder Calibrate
HSWP	HIGH = Sweeping	REC ZERO	Recorder Zero
ICLK	Indicator Clock (Front-Panel LEDs)	RMØ – RM2	Ram Register Select Bits Ø through 2
INSELA	Input Selection Bit A	RSEN	Reset Peak Detectors Enable
INSELB	Input Selection Bit B	RSHS	Reset High Sweep
INTG	Integrator Control	SØ – S11	Source Bus Bits Ø through 11
INTR	Interrupt	SØ – S7	State Bus Bits Ø through 7
IOBØ	Instrument Bus Data Bits Ø through 15	SG1Ø	Step Gain Controls
IOB15		SG2Ø-1	
IOC	I/O Port Input/Output Control	SG2Ø-2	
KSØ – KS3	Constant Selection Bits Ø through 3	SMPL	Sample
LØ – L7	Link State Bus Bits Ø through 7	STROK8	Stroke 8 of Current Character
LADC	LOW = Enable ADC Output	SWITCH	Up/Down Converter Control
LBLANK	LOW = Blanking Control	VBWA	Video Bandwidth Controls
LCLK	Inverted CLK	VBWB	
LCLRSA	LOW = Clear Stroke Address	VBWC	
LDCHAR	Load Character Register	VBWD	
LDEXP	Load Expand Register	VIDEO	Video Signal
LDM EN	Data Manipulator Output Enable	X	Horizontal Signal to CRT
LDMAR	Load Memory Address Register	Y	Vertical Signal to CRT
LDMDR	Load Memory Data Register	Z	Intensity Signal to CRT

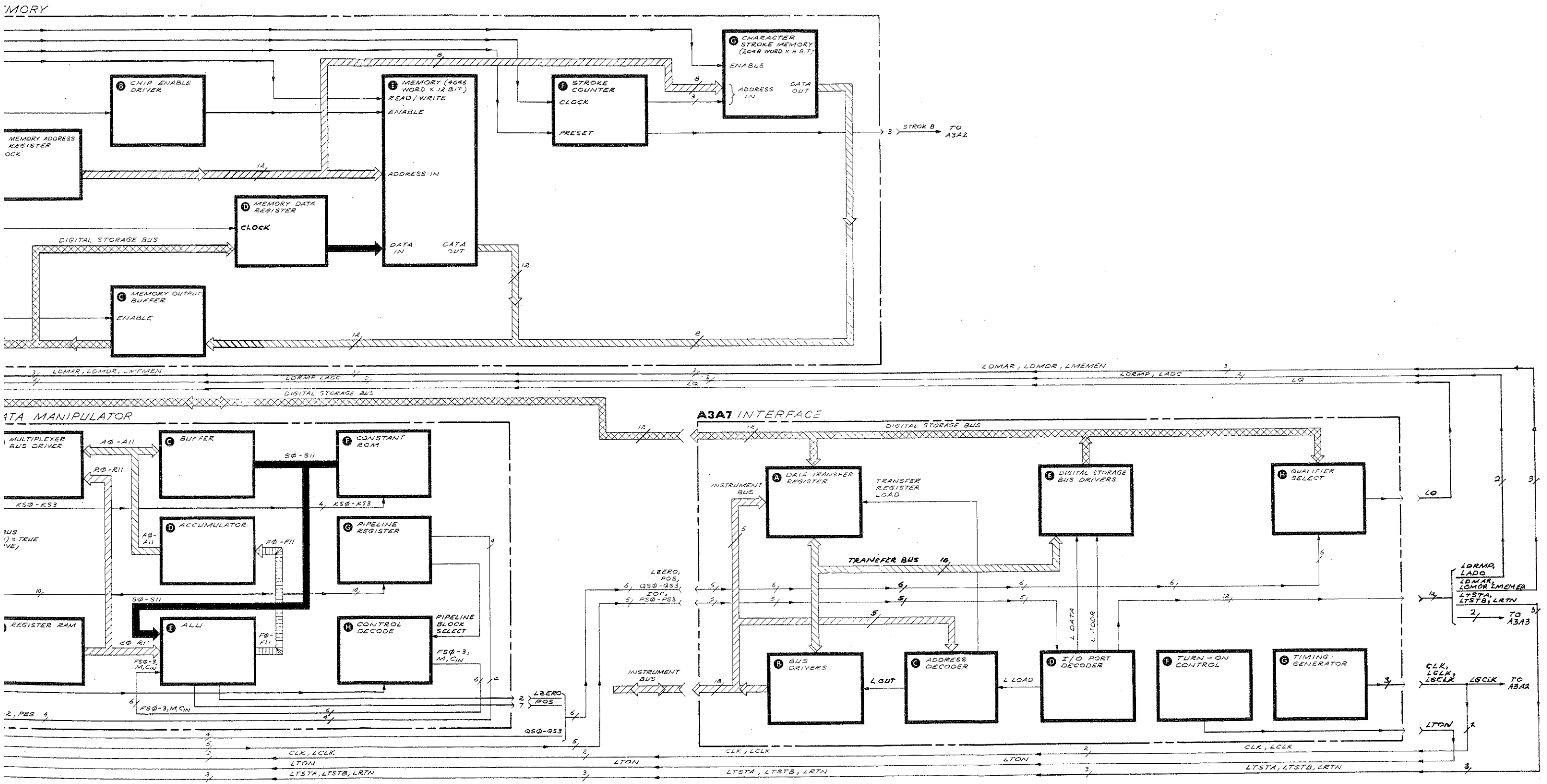

FIGURE 3. A3 DIGITAL STORAGE, BLOCK DIAGRAM

SPLAY SECTION

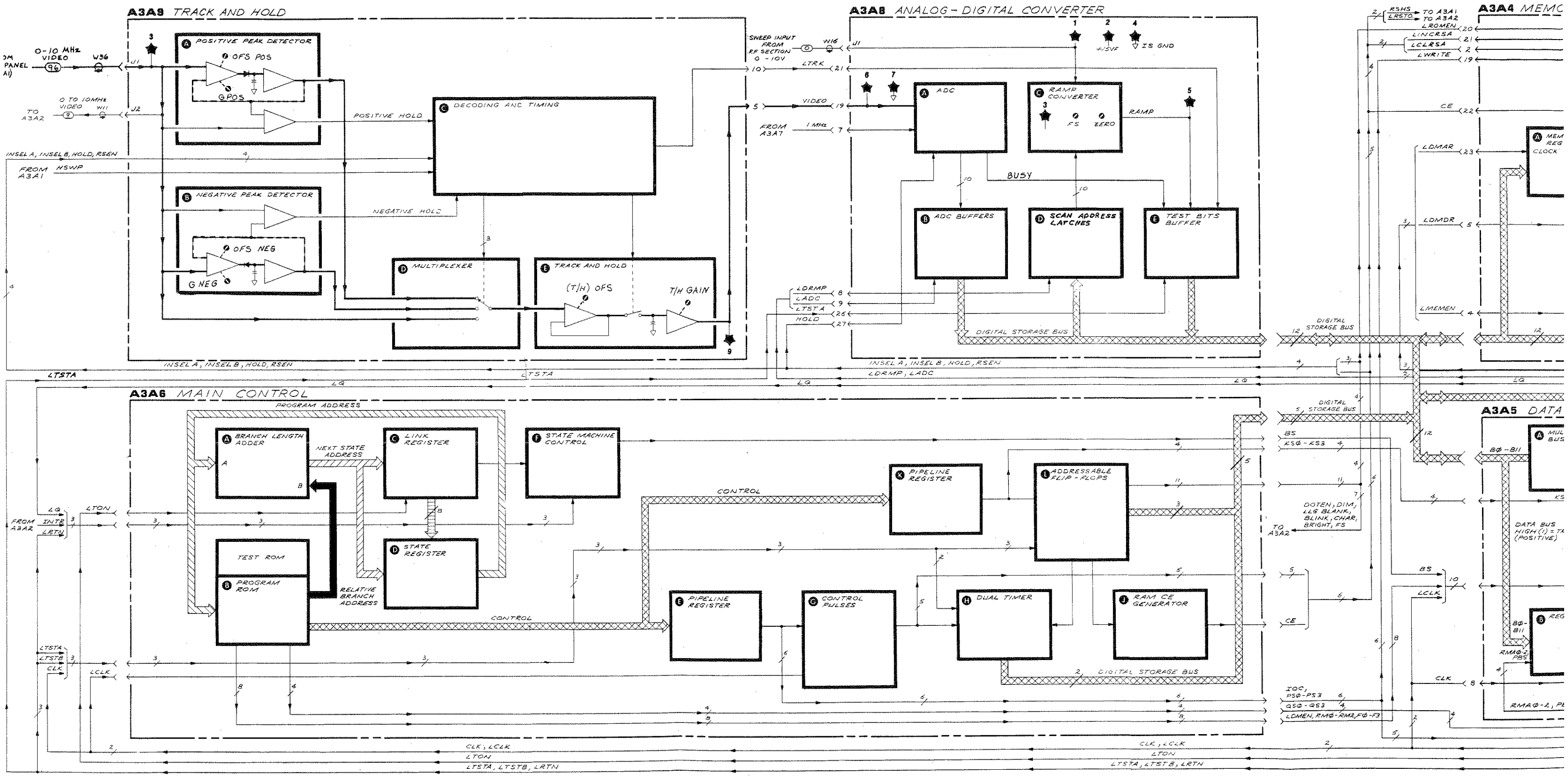

A3A1 TRIGGER, CIRCUIT DESCRIPTION

A3A1 Trigger contains circuits which generate the HSWP signal used by other assemblies in the A3 Digital Storage section and in the spectrum analyzer RF section. Instrument Bus commands set the HSWP line high or low, or program HSWP to go high when a sweep trigger occurs. Trigger sources that may be selected are: the line, the video signal, or an external trigger input from the instrument rear panel. A3A1 Trigger contains circuits that select and process trigger signals. It also contains the Fast Sweep Generator, which produces a linear ramp voltage (0V to approximately +2.2V) used as a horizontal sweep for the CRT display. This sweep ramp is used only with FREQUENCY SPAN = 0 Hz. (It is not used to sweep the RF Section frequency.)

The fast sweep ramp is applied to A1A4 X Deflection Amplifier when selected by an analog multiplexer in A3A2 Intensity Control. The fast sweep time may be varied in a 1, 2, 5 sequence from 10 msec (1 msec/div) to 1 μsec (100 nsec/div). Trigger circuitry used for the triggering of RF Section sweeps (by HSWP) is used to trigger fast sweeps.

A3A1 also contains the Recorder Penlift Driver circuit, which is part of the High Sweep Control.

High Sweep Control (B)

The High Sweep Control circuit generates HSWP, which is a TTL open-collector signal that is used by A3 Digital Storage to control signal tracking and conversion. HSWP is also used in the instrument RF Section to control the Sweep Generator circuitry. The sweep ramp is in progress when HSWP is high and is stopped (at any point during the sweep) when HSWP is low. The RF Section can also pull HSWP low to stop the sweep under certain conditions. For example, when a front-panel key is pressed, the main processor in the RF Section pulls HSWP low (on A12 Interface) to immediately stop the sweep, then programs HSWP low (on A3A1 Trigger) with an Instrument Bus command before servicing the front-panel request. HSWP must be set high again (on A3A1 Trigger) for the sweep in the RF Section to resume.

HSWP is used directly to light the green front-panel SWEEP LED on the IF-Display Section. This LED provides a very quick method of checking for activity on the HSWP line.

HSWP Generation. For HSWP to be high, flip-flop U12A pin 6 must be low. Inverter U7A buffers U12A and provides the open collector drive for the HSWP line. U12A is set and cleared by the Instrument Bus and can be cleared by the RSHS signal from A3A6 Main Control. To set HSWP, Instrument Bus bits 14 and 15 are set high, Address 50 is selected, and address decoder U18 is enabled by LTIO (the IF-Display Section address strobe). U18, pin 13 goes low, which clocks the U4A and U4B Q outputs high. The positive-going transition at the U4B output triggers a pulse of approximately 500 μsec at U9A pin 4. At the end of this pulse, U9B generates a narrow (50-nsec) pulse that clocks U12A and U12B. This causes U12A pin 6 to go low and HSWP to go high. (Note that HSWP is set high approximately 500 μsec after occurrence of the Instrument Bus SET command. This time delay allows A15 Controller to perform certain functions before the sweep starts.

To clear HSWP, Instrument Bus 13 is set high, Address 50 is selected, and (when the IF-Display Section address strobe occurs) U12A, U12B, U4A, and U4B are cleared. HSWP may also be cleared by other assemblies in the A3 Digital Storage when the RSHS line goes low.

In Fast Sweep mode (sweep time setting ≤10 msec), HSWP is no longer used to control the RF Section sweep ramp, since the spectrum analyzer is not sweeping the RF Section frequency. It is normal to see the green front-panel sweep LED turn off for these settings, even though the CRT trace is sweeping.

Free Run Mode (for Sweep Time ≥20 mSec). When the RF Section is in Free Run mode with sweep time settings ≥20 msec, the sweep is started when the Instrument Bus sets HSWP. The sweep is stopped by the RSHS line from A3A6 Main Control or by a CLEAR command from the Instrument Bus. A15 Controller controls the time from the end of one sweep to the beginning of the next sweep (sweep dead time).

Line, Video, and External Triggers (for Sweep Time ≥20 mSec). The RF Section can direct A3A1 to set HSWP high when a line, video, or external trigger occurs. If Instrument Bus line 14 is high and U18 is strobed with Address 50, U18 pin 13 will go low, setting U4A pin 9 high, which triggers U9A. At the end of the pulse generated by U9B, U12B pin 9 will be clocked high, placing a high at the data input (pin 2) of U12A. The output (pin 6) of trigger multiplexer U16 in the Trigger generator will then cause U12A to be clocked on a negative-going transition of the selected trigger input. (Refer to the Trigger Generator circuit description.)

Recorder Pen Lift Driver. In sweep time settings ≥20 msec, the Recorder Pen Lift Driver supplies the PEN LIFT signal to the rear-panel PENLIFT connector. PENLIFT may also be used to control blanking of an external CRT display.

PENLIFT is a 0V to 15V signal that lowers the recorder pen when an RF Section sweep is in progress (HSWP is high, PENLIFT is 0V) and lifts the pen when a sweep is not in progress (HSWP is low, PENLIFT is 15V). Decoder U3A is a noninverting buffer that drives Q15 from the HSWP line.

Sweep Trigger (F)

The Sweep Trigger circuit produces triggers for all sweep times. It contains the video, external, and line trigger circuits, the fast sweep Free Run Oscillator, the trigger multiplexer, and the fast-sweep Auto Trigger circuit. A valid trigger for the Fast Sweep Generator or the High Sweep Control circuit is produced by a negative-going transition at the selected input of trigger multiplexer U16. This trigger signal will start a sweep only if the Fast Sweep Control and High Sweep Control circuits are in the proper states.

Video Trigger. Video Trigger Comparator U13 generates a negative-going transition when the VIDEO signal rises above the voltage at U13 pin 2, which depends on the position of the front-panel TRIGGER LEVEL control. R49, R50, and R51 divide the TRIG LEVEL voltage (0V to +5.1V) to approximately −0.1V to +2.1V at U13 pin 2. The LOW FAST SWEEP signal, connected to the strobe inputs (pins 5 and 6) of U13, disables the output of U13 in Fast Sweep mode when the fast sweep ramp is being generated. R52 provides hysteresis for U13, and CR1 protects U13 from excessive input voltage on the VIDEO line. The +10V and −10V supply voltages for U13 are derived through VR4 and VR5.

External and Line Triggers. The EXT TRIG input from the IF-Display Section rear panel is applied to buffer/inverter Q14 through divider R61 and R62. When EXT TRIG rises above approximately +1.4V, Q14 saturates and U15C pin 9 goes low, causing U16 pin 3 to go low, producing a trigger.

A voltage, resistively divided from a winding of the IF-Display Section line transformer, is buffered by Schmitt trigger inverter U15A, the output of which is applied to U16 pin 2, the line trigger input of the trigger multiplexer. Negative-going transitions at U16 pin 2 are valid line triggers.

Free Run Mode (Sweep Time ≤10 mSec). In Fast Sweep mode, during the fast sweep dead time, U11C pin 8 is high. This causes U15B to oscillate at a rate (determined by R59 and C11) of approximately 500 kHz. Negative-going transitions at U15B pin 6 produce triggers in the Fast Sweep, Free Run mode. U15B is gated off during the fast sweep ramp. Note that the Free Run Oscillator is not used to trigger sweeps in sweep times ≥20 msec. (See High Sweep Control circuit description.)

Fast Sweep Auto Trigger. When the EXT or VIDEO key is pressed and the sweep time is 10 msec or less (Fast Sweep mode), a fast sweep ramp will be started automatically about 25 msec after the start of the last fast sweep if no video or external trigger occurs first. If SHIFT EXT or SHIFT VIDEO keys are pressed, fast sweep triggering will be in Normal mode. In Normal mode, no fast sweep will be started until a trigger occurs. The CRT graticule and characters will not be refreshed until a fast sweep has occurred.

Fast Sweep Auto Trigger Circuitry. In Auto Trigger mode, the Instrument Bus sets U5 pin 12 High. U1A pin 1 goes high when the fast sweep ramp begins, triggering a 25-msec (low) pulse at U1A pin 4. If another fast sweep ramp is started within 25 msec of the beginning of the previous fast sweep ramp, U1A will be re-

triggered, and U1A pin 4 will not go high for at least another 25 msec. If triggers cease to occur, U11D pin 11 will go high 25 msec after the last fast sweep. This causes trigger multiplexer U16 to select the output of the Free Run Oscillator in either Video or External mode, triggering a sweep. Auto triggering will not occur in sweep times $\geq$ 20 msec, because in this case the Auto Trigger circuitry is disabled by the FAST SWEEP ENABLE line to U11B pin 5.

If [SHIFT] [EXT] or [SHIFT] [VIDEO] keys are pressed, U5 pin 12 will be low, preventing automatic triggering in the absence of a video or external trigger.

Fast Sweep Time Control (A)

Data on Instrument Bus lines 11 through 14 specify the fast sweep generator sweep time. This data is latched into hex D flip-flop U6 when Address 51 is strobed. (Refer to the table, Note 6 on the schematic, for coding of the sweep time control lines.) Data on Instrument Bus line 15 is latched into U6 with the four sweep time bits (IOB11 – IOB14) and enables fast sweep generator operation.

Switchable Current Source. Current for the generation of the fast sweep ramp is supplied by Q13. Op amp U8 regulates (through R6 and R7) the emitter voltage of Q13 to keep it equal to the reference voltage at U8 pin 3.

Q6 controls the reference voltage by switching R2 in or out of the voltage divider circuit, which is made up of R1, R2, and R3. The voltage difference between Q13 emitter and +15 VF1 is set at 2V when Q6 is off and 4V when Q6 is on. The voltage difference is held across a switchable resistance between Q13 emitter and +15VF1. FET switches Q7, Q8, and Q9 connect resistors in parallel with R14 to change the current supplied by the current source. When Q7, Q8, and Q9 are off, R14 sets Q13 collector current. In certain sweep times, Q9 is turned on by U2C. (Refer to the table on the schematic, Note 6.) This places R11 in parallel with R14, increasing the current by a factor of 5. Similarly, R12 or R13 may be switched in to increase current by factors of 10 and 50 respectively. Q7, Q8, and Q9 are controlled by open-collector drivers U2B, U2A, and U2C. The FET switches are on when the FET gate voltage is high (+15V) and off when the FET gate voltage is low (approximately +0.2V). U3B decodes the sweep rate control lines from U6 and controls U2A, U2B, and U2C.

Fast Sweep Generator (C)

To produce the fast sweep ramp for sweep times $\leq$100 μsec, current from Q13 charges timing capacitor C4. For sweep times of 200 μsec to 10 msec, Q11 is turned on, placing timing capacitor C5 in parallel with C4, increasing the sweep time by a factor of 100. C4 and C5 (if it is in the circuit) are discharged by Q10 and Q12 at the end of the sweep.

Discharge Switch. When no sweep is in progress, the output of open-collector inverter U7D is high (+5V), and current through R30 and R31 flow into Q10 and through CR6 into Q12. In addition, current flows from Q13 into Q12. At the start of a fast sweep ramp, U7D pin 8 goes low, and the voltage at the anode of CR6 and the emitter of Q10 is pulled slightly negative by R32. CR6 becomes reverse biased, and Q10 turns off, turning Q12 off. Current from the collector of Q13 now flows into timing capacitors C4 and C5, and the sweep ramp begins. When the end of the sweep ramp (+2.2V) is detected by the Fast Sweep Control circuit, U7D pin 8 goes high (about +5V), turning Q10 on. This turns Q12 on, and it begins to discharge C4 and C5. Q12 continues to discharge the timing capacitors until CR6 becomes forward biased. At that time, the circuit reaches equilibrium, holding the sweep ramp at near 0V, with the offset adjusted by R34.

Fast Sweep Buffer Amplifier. Op amp U14 is connected as a unity gain buffer amplifier, which provides the low impedance fast sweep ramp output (FS OUT). FS OUT is applied to the X-axis scan multiplexer in A3A2 Intensity Control.

Fast Sweep Control (D)

The Fast Sweep Control contains circuitry for end of sweep detection and controls fast sweep dead time, and fast sweep triggering.

End of Sweep Detection. When the sweep ramp reaches about +2.2V, Q5 conducts and turns Q4 on. When the collector of Q4 goes low, U1B pin 5 produces a pulse whose length is the dead time. U10A and U10B are cleared when U10B pin 5 goes low, and timing capacitors C4 and C5 are discharged by the Discharge Switch in the Fast Sweep Generator. Voltage divider R19 and R20 set the level at which Q5 senses the end of the sweep ramp. (Note that the fast sweep ramp ends beyond the right-hand edge of the CRT.) The LRTRC line from U10B pin 5, which is high during the sweep, supplies the retrace blanking signal to A3A2 Intensity Control.

Fast Sweep Dead Time. Multivibrator U1B controls the sweep dead time. U1B is triggered at the end of the fast sweep ramp and holds U10A and U10B cleared for a time that is determined by C7, R24, and R25. This prevents the triggering of further ramps for the length of the pulse from U1B pin 5. The length of the dead time is about 15 μsec for sweep times from 1 μsec through 100 msec and about 120 μsec for sweep times from 200 μsec through 10 msec. The ST 1ØØ line (from U6 pin 12 in the Fast Sweep Time Control circuit) controls the length of the sweep dead time by switching the U1B timing resistors with transistor switch Q3. In sweep times of 10 msec through 200 μsec, Q3 is off and the dead time, set by C7 and R24, is 120 μsec. In sweep times of 100 μsec through 1 μsec, Q3 is on, placing R25 in parallel with R24 to decrease the dead time to 15 μsec. C6 and R23 supply additional base drive to Q4 at the end of the sweep to insure triggering of U1B.

Fast Sweep Triggering. Flip-flops U10A and U10B control the state of the fast sweep generator. U10A controls the Discharge Switch through inverter/buffer U7D. At the end of a fast sweep, both U10A and U10B are held cleared by the dead time circuit (U1B and U7F). Following the dead time, a trigger from U16 pin 5 causes U10B pin 7 to go low. This causes U10A pin 5 to go high, which turns off the Discharge Switch and starts a sweep ramp. This can occur only if FS EN is high. If FS EN is low, the J and K inputs of U10B are held low and a trigger will not set U10B.

Fast Sweep Multiplexing. In Fast Sweep mode, the X output of A3A3 Line Generator and the fast sweep ramp must be multiplexed to A1A4 X Deflection Amplifier to produce a display consisting of the graticule and characters with the fast sweep ramp and the analog video signal. The video signal from A4A1 Video Processor is multiplexed to A1A5 Y Deflection Amplifier when the fast sweep ramp is multiplexed to A1A4. The X and Y multiplexers are located in A3A2 Intensity Control.

In Fast Sweep mode, the output from A3A3 is applied to the CRT deflection amplifiers following the completion of at least one fast sweep ramp.

Fast Sweep Intensity Control (E)

To provide uniform intensity between the fast sweep trace and the other information displayed on the CRT, the Fast Sweep Intensity Control circuit generates a voltage to control the CRT beam intensity (Z-axis) when the fast sweep ramp is multiplexed in.

The FSZ voltage is dependent on the duty cycle of the fast sweep ramp; that is, the ratio of time during which the ramp is in progress to the sum of dead time and sweep time. FSZ varies from about 150 mV (low beam intensity) for high duty cycle operation to about 2V (high beam intensity) for very low duty cycle operation.

The LRTRC line, high during the fast sweep ramp, provides a digital waveform which is averaged and inverted by Q2, C15, and associated circuitry, providing an output voltage to Q1 that is dependent on the average value of the LRTRC signal. Q1 is an emitter follower which provides drive when the FSZ signal is above ≈150 mV for low duty cycle sweep operation (less than 20 percent). When the voltage at the collector of Q2 is below +0.7V (high duty cycle operation), the base-emitter junction of Q1 is off, and the FSZ voltage is held at about 150 mV by voltage divider R71 and R72.

A3A1 TRIGGER, TROUBLESHOOTING

Much of the circuitry on the A3A1 Trigger can be tested without removing the assembly from the instrument. First key in Instrument Preset, [FREQUENCY SPAN] 0 Hz and [SWEEP TIME] 10 msec. Noise should be displayed at approximately 2.5 divisions up from the bottom graticule. If the display is blanked, try [LINE] and then [VIDEO] triggering.

The waveforms shown on the service sheet for TP2 and TP5 are valid only in the [FREE RUN] and Normal mode ([SHIFT] [VIDEO] , [SHIFT] [EXT]). The Fast Sweep time should be equal to the time it takes the ramp at TP5 to sweep from 0V to +2V. The oversweep above 2V is determined by the Sweep Comparator and is not critical for instrument operation. The dead time when the ramp and LRTRC are low is approximately 15 μsec for sweep times less than 200 μsec, and 120 μsec for sweep times from 200 μsec to 10 ms. During the dead time the Free Run Oscillator is on. See Figure 1 for the relationships between the waveforms.

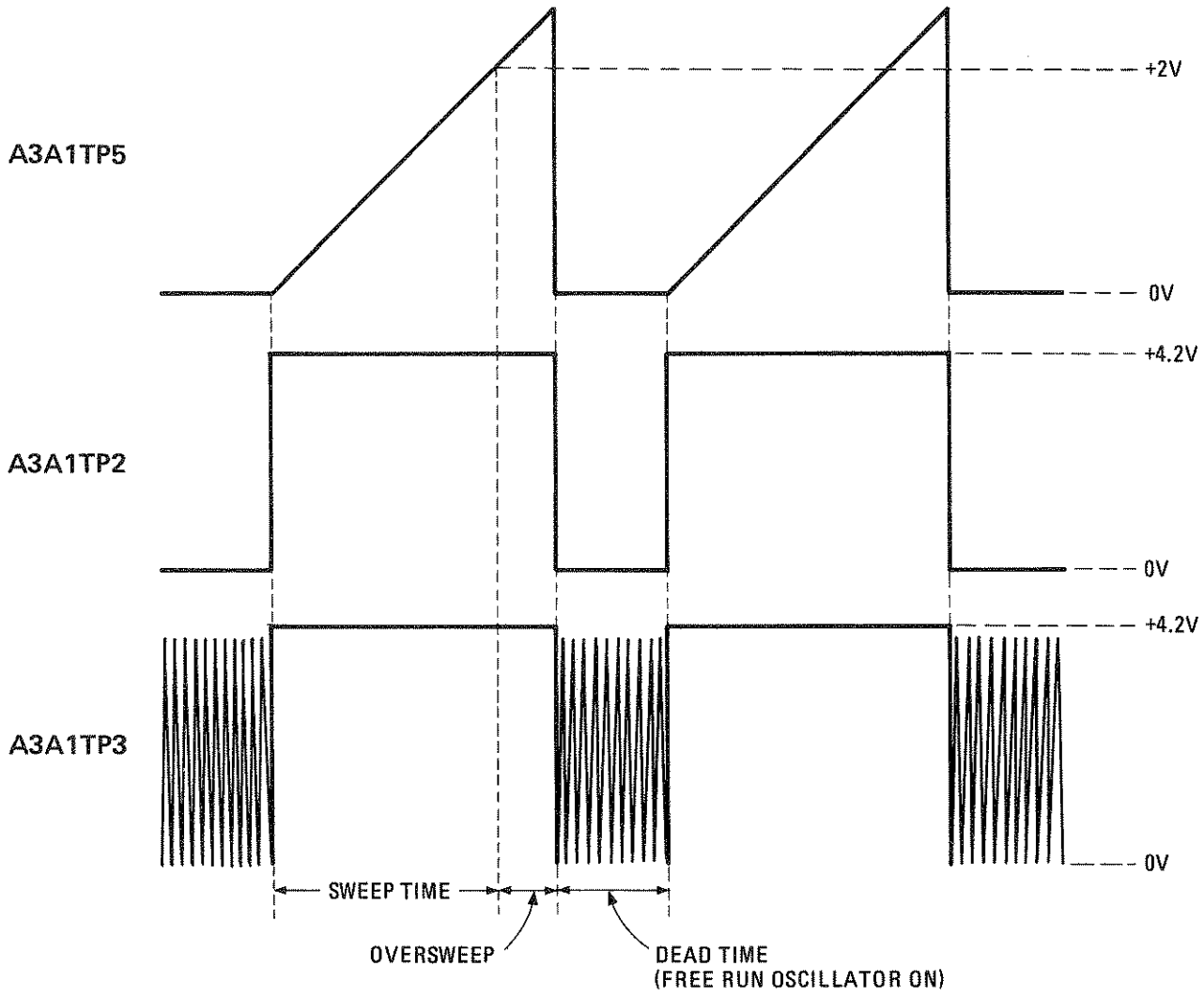

FIGURE 1. FAST SWEEP TIME WAVEFORMS

When using [LINE] TRIGGER, the waveforms are similar except for the dead time. Following the minimum dead time period, whenever a negative-going transition occurs at TP3, a ramp is started. When the sweep ends, TP2 goes low and stays low until a negative-going transition occurs at TP3. See Figure 2 for the relationships between the [LINE] TRIGGER waveforms.

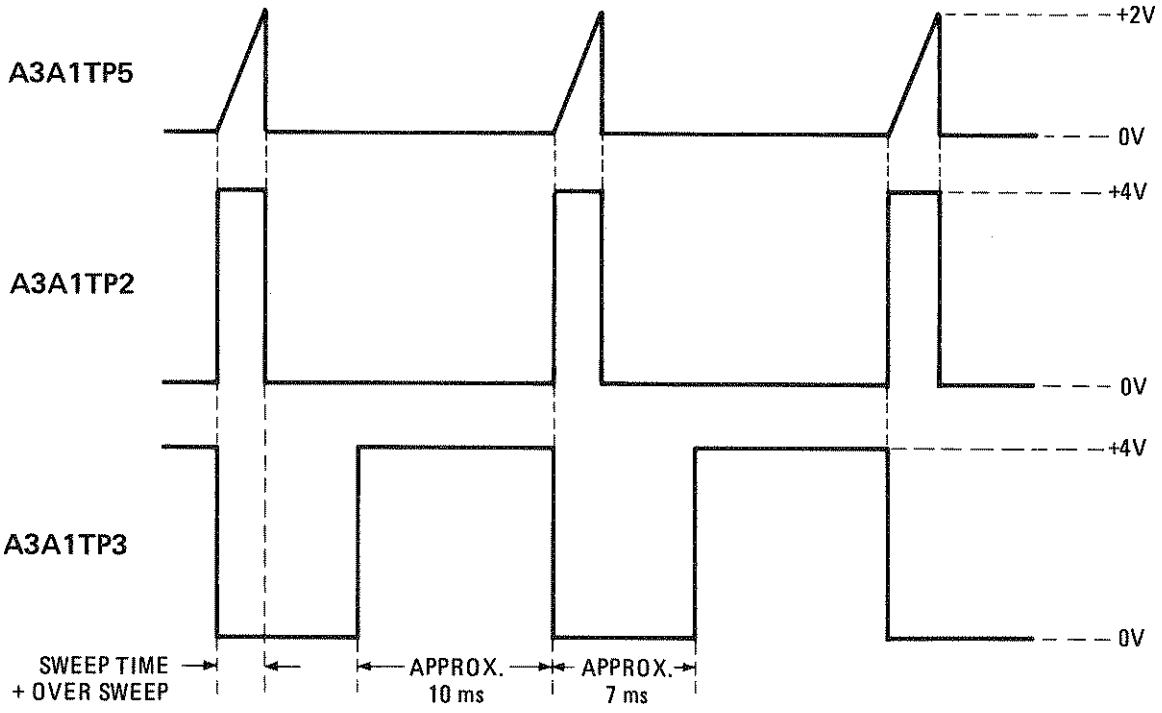

FIGURE 2. FAST SWEEP LINE TRIGGER WAVEFORMS

If noise is used as a video trigger and the TRIGGER LEVEL control is properly set, the [VIDEO] trigger waveforms at TP5 and TP2 will be the same as those in Figure 1. During the minimum dead time period, the noise signal trigger will be present. If a video trigger does not occur (TRIGGER LEVEL control set fully CW or CCW), then the Auto Trigger circuitry will generate a trigger approximately every 25 msec. TP2 and TP5 will have the relationship shown in Figure 2. If the voltage at U13 pin 3 is much less than U13 pin 2, then TP3 will be approximately +4V. If the opposite is true, the waveforms at TP3 and TP2 will be the same.

If no fast sweep is occurring, check TP5 first. If the voltage is greater than +2.6V, the most likely failure would be in the Fast Sweep Control circuitry. Refer to the circuit description for operation of this functional block. An open Discharge Switch would also cause TP5 to remain greater than +2.6V for all fast sweep times.

If TP5 is 0 ±200 mVdc and no fast sweeps occur, the Fast Sweep Control circuitry should be examined. Other defective components that would cause the same indications are Q13 and U7D. The Sweep Trigger circuit may also be defective.

The Sweep Trigger circuitry can be tested by tracing the trigger signals through U16 to pin 13 of U10. Try Triggering first, as this is the simplest source. A TTL signal at the power line frequency should be present at TP3. U7 pin 12 and the FAST SWP ENABLE line should both be high. Also check for proper trigger signals at TP3.

Incorrect sweep times on the fast sweep time mode are difficult to observe from the display. One quick trouble-shooting method is to disconnect the VIDEO signal (cable 96, coming from the rear-panel VIDEO INP jack) from A3A9J1 and connect A3A9J1 to A3A2J2. This sends a 200 kHz test waveform to the Deflection Amplifiers. Press [VIDEO] TRIGGER and set the [SWEEP TIME] to 10 μsec. Adjust the LEVEL Control to produce a display. It should appear as in Figure 3. By using fast sweep times from 10 μsec to 200 μsec, all of the Fast Sweep Time Control circuitry will be exercised. If one or more of the sweep times is incorrect, Note 6 will be helpful in determining if one of the control lines is faulty. The Switchable Current Source circuitry may also be defective.

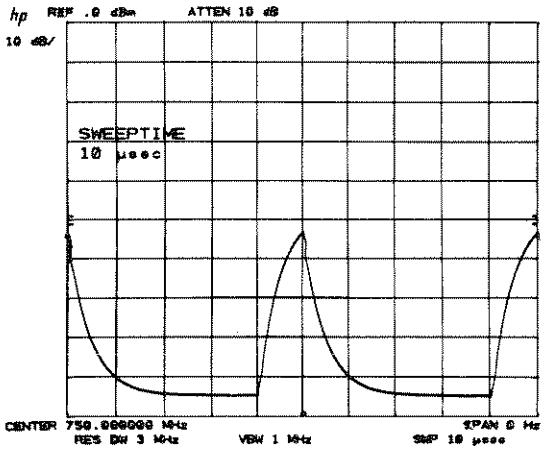

FIGURE 3. 200 kHz TEST SIGNAL WAVEFORM

TABLE 1. A3A1, REPLACEABLE PARTS (1 OF 3)

Reference Designation	HP Part Number	C D	Qty	Description	Mfr Code	Mfr Part Number
A3A1	85662-60014	6	1	BOARD ASSEMBLY, TRIGGER	28480	85662-60014
A3A1C1	0160-0174	9	3	CAPACITOR-FXD .47UF +80-20% 25VDC CER	28480	0160-0174
A3A1C2	0160-0174	9		CAPACITOR-FXD .47UF +80-20% 25VDC CER	28480	0160-0174
A3A1C3	0160-2252	8	1	CAPACITOR-FXD 6.2PF +-.25PF 500VDC CER	28480	0160-2252
A3A1C4	0140-0233	9	1	CAPACITOR-FXD 480PF +-1% 300VDC MICA	72136	DM15F481F0300WV1C
A3A1C5	0160-4314	7	1	CAPACITOR-FXD .05UF +-1% 200VDC	28480	0160-4314
A3A1C6	0160-2307	4	1	CAPACITOR-FXD 47PF +-5% 300VDC MICA	28480	0160-2307
A3A1C7	0160-0155	6	1	CAPACITOR-FXD 3300PF +-10% 200VDC POLYE	28480	0160-0155
A3A1C8	0160-4084	8	2	CAPACITOR-FXD .1UF +-20% 50VDC CER	28480	0160-4084
A3A1C9	0160-4084	8		CAPACITOR-FXD .1UF +-20% 50VDC CER	28480	0160-4084
A3A1C11	0160-3456	6	1	CAPACITOR-FXD 1000PF +-10% 1KVDC CER	28480	0160-3456
A3A1C12	0180-0197	8	7	CAPACITOR-FXD 2.2UF+-10% 20VDC TA	56289	150D225X9020A2
A3A1C13				NOT ASSIGNED		
A3A1C14	0180-0197	8		CAPACITOR-FXD 2.2UF+-10% 20VDC TA	56289	150D225X9020A2
A3A1C15	0180-0374	3	1	CAPACITOR-FXD 10UF+-10% 20VDC TA	56289	150D106X9020B2
A3A1C16	0180-0197	8		CAPACITOR-FXD 2.2UF+-10% 20VDC TA	56289	150D225X9020A2
A3A1C17	0180-0197	8		CAPACITOR-FXD 2.2UF+-10% 20VDC TA	56289	150D225X9020A2
A3A1C18	0180-0197	8		CAPACITOR-FXD 2.2UF+-10% 20VDC TA	56289	150D225X9020A2
A3A1C19	0180-0197	8		CAPACITOR-FXD 2.2UF+-10% 20VDC TA	56289	150D225X9020A2
A3A1C20	0160-0174	9		CAPACITOR-FXD .47UF +80-20% 25VDC CER	28480	0160-0174
A3A1C21				NOT ASSIGNED		
A3A1C22				NOT ASSIGNED		
A3A1C23	0180-0197	8		CAPACITOR-FXD 2.2UF+-10% 20VDC TA	56289	150D225X9020A2
A3A1C24- A3A1C26				NOT ASSIGNED		
A3A1C27	0160-2055	9	3	CAPACITOR-FXD .01UF +80-20% 100VDC CER	28480	0160-2055
A3A1C28	0160-2055	9		CAPACITOR-FXD .01UF +80-20% 100VDC CER	28480	0160-2055
A3A1C29	0160-2055	9		CAPACITOR-FXD .01UF +80-20% 100VDC CER	28480	0160-2055
A3A1CR1	1901-0535	9	4	DIODE-SM SIG SCHOTTKY	28480	1901-0535
A3A1CR2	1901-0535	9		DIODE-SM SIG SCHOTTKY	28480	1901-0535
A3A1CR3	1901-0535	9		DIODE-SM SIG SCHOTTKY	28480	1901-0535
A3A1CR4	1901-0535	9		DIODE-SM SIG SCHOTTKY	28480	1901-0535
A3A1CR5	1901-0040	1	1	DIODE-SWITCHING 30V 50MA 2NS DO-35	28480	1901-0040
A3A1CR6	1901-0179	7	1	DIODE-SWITCHING 15V 50MA 750PS DO-7	28480	1901-0179
A3A1L1	9140-0114	4	3	INDUCTOR RF-CH-MLD 10UH 10% .166DX.385LG	28480	9140-0114
A3A1L2	9140-0114	4		INDUCTOR RF-CH-MLD 10UH 10% .166DX.385LG	28480	9140-0114
A3A1L3	9140-0114	4		INDUCTOR RF-CH-MLD 10UH 10% .166DX.385LG	28480	9140-0114
A3A1Q1	1854-0882	8	2	TRANSISTOR NPN PD=300MW FT=200MHZ	28480	1854-0882
A3A1Q2	1854-0882	8		TRANSISTOR NPN PD=300MW FT=200MHZ	28480	1854-0882
A3A1Q3	1853-0281	9	2	TRANSISTOR PNP 2N2907A SI TO-18 PD=400MW	04713	2N2907A
A3A1Q4	1854-0404	0	4	TRANSISTOR NPN SI TO-18 PD=360MW	28480	1854-0404
A3A1Q5	1853-0281	9		TRANSISTOR PNP 2N2907A SI TO-18 PD=400MW	04713	2N2907A
A3A1Q6	1854-0404	0		TRANSISTOR NPN SI TO-18 PD=360MW	28480	1854-0404
A3A1Q7	1855-0020	8	3	TRANSISTOR J-FET N-CHAN D-MODE TO-18 SI	28480	1855-0020
A3A1Q8	1855-0020	8		TRANSISTOR J-FET N-CHAN D-MODE TO-18 SI	28480	1855-0020
A3A1Q9	1855-0020	8		TRANSISTOR J-FET N-CHAN D-MODE TO-18 SI	28480	1855-0020
A3A1Q10	1853-0034	6	1	TRANSISTOR PNP SI TO-18 PD=360MW	28480	1853-0034
A3A1Q11	1854-0404	0		TRANSISTOR NPN SI TO-18 PD=360MW	28480	1854-0404
A3A1Q12	1854-0546	1	1	TRANSISTOR NPN SI TO-72 PD=200MW	28480	1854-0546
A3A1Q13	1853-0451	5	1	TRANSISTOR PNP 2N3799 SI TO-18 PD=360MW	01295	2N3799
A3A1Q14	1854-0404	0		TRANSISTOR NPN SI TO-18 PD=360MW	28480	1854-0404
A3A1Q15	1854-0039	7	1	TRANSISTOR NPN 2N3053S SI TO-39 PD=1W	3L585	2N3053S
A3A1R1	0698-6863	4	1	RESISTOR 1.537K .25% .125W F TC=0+-50	28480	0698-6863
A3A1R2	0698-6867	8	1	RESISTOR 7.35K .25% .125W F TC=0+-50	28480	0698-6867
A3A1R3	0698-7794	2	1	RESISTOR 10K .25% .125W F TC=0+-100	19701	MF4C1/8-T0-1002-C
A3A1R4	0757-0279	0	10	RESISTOR 3.16K 1% .125W F TC=0+-100	24546	C4-1/8-T0-3161-F
A3A1R5	0757-0279	0		RESISTOR 3.16K 1% .125W F TC=0+-100	24546	C4-1/8-T0-3161-F
A3A1R6	0757-0279	0		RESISTOR 3.16K 1% .125W F TC=0+-100	24546	C4-1/8-T0-3161-F
A3A1R7	0757-0279	0		RESISTOR 3.16K 1% .125W F TC=0+-100	24546	C4-1/8-T0-3161-F
A3A1R8	0757-0279	0		RESISTOR 3.16K 1% .125W F TC=0+-100	24546	C4-1/8-T0-3161-F
A3A1R9	0757-0279	0		RESISTOR 3.16K 1% .125W F TC=0+-100	24546	C4-1/8-T0-3161-F
A3A1R10	0757-0279	0		RESISTOR 3.16K 1% .125W F TC=0+-100	24546	C4-1/8-T0-3161-F
A3A1R11	0698-5573	1	1	RESISTOR 50K .5% .125W F TC=0+-100	24546	C4-1/8-T0-5002-D
A3A1R12	0698-8014	1	1	RESISTOR 22.3K .5% .125W F TC=0+-50	19701	MF4C1/8-T2-2232-D
A3A1R13	0698-6840	7	1	RESISTOR 4.07K .5% .125W F TC=0+-50	24546	NC55-1/8-T2-4071-D
A3A1R14	0698-6217	2	1	RESISTOR 200K .5% .125W F TC=0+-100	28480	0698-6217
A3A1R15	0757-0416	7	4	RESISTOR 511 1% .125W F TC=0+-100	24546	C4-1/8-T0-511R-F
A3A1R16	0757-0280	3	11	RESISTOR 1K 1% .125W F TC=0+-100	24546	C4-1/8-T0-1001-F
A3A1R17	0698-0083	8	2	RESISTOR 1.96K 1% .125W F TC=0+-100	24546	C4-1/8-T0-1961-F
A3A1R18	0698-3440	7	2	RESISTOR 196 1% .125W F TC=0+-100	24546	C4-1/8-T0-196R-F
A3A1R19	0757-0443	0	1	RESISTOR 11K 1% .125W F TC=0+-100	24546	C4-1/8-T0-1102-F
A3A1R20	0757-1094	9	2	RESISTOR 1.47K 1% .125W F TC=0+-100	24546	C4-1/8-T0-1471-F

TABLE 1. A3A1, REPLACEABLE PARTS (2 OF 3)

Reference Designation	HP Part Number	C D	Qty	Description	Mfr Code	Mfr Part Number
A3A1R21	0757-0280	3		RESISTOR 1K 1% .125W F TC=0+-100	24546	C4-1/8-T0-1001-F
A3A1R22	0757-0280	3		RESISTOR 1K 1% .125W F TC=0+-100	24546	C4-1/8-T0-1001-F
A3A1R23	0757-0280	3		RESISTOR 1K 1% .125W F TC=0+-100	24546	C4-1/8-T0-1001-F
A3A1R24	0757-0465	6	1	RESISTOR 100K 1% .125W F TC=0+-100	24546	C4-1/8-T0-1003-F
A3A1R25	0757-0444	1	1	RESISTOR 12.1K 1% .125W F TC=0+-100	24546	C4-1/8-T0-1212-F
A3A1R26	0698-3156	2	4	RESISTOR 14.7K 1% .125W F TC=0+-100	24546	C4-1/8-T0-1472-F
A3A1R27	0757-0279	0		RESISTOR 3.16K 1% .125W F TC=0+-100	24546	C4-1/8-T0-3161-F
A3A1R28	0698-0083	8		RESISTOR 1.96K 1% .125W F TC=0+-100	24546	C4-1/8-T0-1961-F
A3A1R29	0757-0280	3		RESISTOR 1K 1% .125W F TC=0+-100	24546	C4-1/8-T0-1001-F
A3A1R30	0757-0280	3		RESISTOR 1K 1% .125W F TC=0+-100	24546	C4-1/8-T0-1001-F
A3A1R31	0757-0416	7		RESISTOR 511 1% .125W F TC=0+-100	24546	C4-1/8-T0-511R-F
A3A1R32	0698-3156	2		RESISTOR 14.7K 1% .125W F TC=0+-100	24546	C4-1/8-T0-1472-F
A3A1R33	0698-3440	7		RESISTOR 196 1% .125W F TC=0+-100	24546	C4-1/8-T0-196R-F
A3A1R34	2100-1972	3	1	RESISTOR-TRMR 20K 10% WW SIDE-ADJ 20-TRN	02660	3810P-203
A3A1R35	0698-3156	2		RESISTOR 14.7K 1% .125W F TC=0+-100	24546	C4-1/8-T0-1472-F
A3A1R36	0698-3441	8	1	RESISTOR 215 1% .125W F TC=0+-100	24546	C4-1/8-T0-215R-F
A3A1R37	0698-3445	2	1	RESISTOR 348 1% .125W F TC=0+-100	24546	C4-1/8-T0-348R-F
A3A1R38				NOT ASSIGNED		
A3A1R39				NOT ASSIGNED		
A3A1R40	0757-0279	0		RESISTOR 3.16K 1% .125W F TC=0+-100	24546	C4-1/8-T0-3161-F
A3A1R41	0698-3156	2		RESISTOR 14.7K 1% .125W F TC=0+-100	24546	C4-1/8-T0-1472-F
A3A1R42	0757-0438	3	1	RESISTOR 5.11K 1% .125W F TC=0+-100	24546	C4-1/8-T0-5111-F
A3A1R43	0757-1094	9		RESISTOR 1.47K 1% .125W F TC=0+-100	24546	C4-1/8-T0-1471-F
A3A1R44				NOT ASSIGNED		
A3A1R45	0757-0280	3		RESISTOR 1K 1% .125W F TC=0+-100	24546	C4-1/8-T0-1001-F
A3A1R46	0757-0416	7		RESISTOR 511 1% .125W F TC=0+-100	24546	C4-1/8-T0-511R-F
A3A1R47	0757-0416	7		RESISTOR 511 1% .125W F TC=0+-100	24546	C4-1/8-T0-511R-F
A3A1R48	0757-0442	9	3	RESISTOR 10K 1% .125W F TC=0+-100	24546	C4-1/8-T0-1002-F
A3A1R49	0757-0289	2	1	RESISTOR 13.3K 1% .125W F TC=0+-100	19701	MF4C1/8-T0-1332-F
A3A1R50	0683-1555	0	1	RESISTOR 1.5M 5% .25W FC TC=-900/+1100	01121	CB1555
A3A1R51	0757-0442	9		RESISTOR 10K 1% .125W F TC=0+-100	24546	C4-1/8-T0-1002-F
A3A1R52	0698-3260	9	1	RESISTOR 464K 1% .125W F TC=0+-100	28480	0698-3260
A3A1R53	0757-0279	0		RESISTOR 3.16K 1% .125W F TC=0+-100	24546	C4-1/8-T0-3161-F
A3A1R54	0757-0346	2	3	RESISTOR 10 1% .125W F TC=0+-100	24546	C4-1/8-T0-10R0-F
A3A1R55	0757-0346	2		RESISTOR 10 1% .125W F TC=0+-100	24546	C4-1/8-T0-10R0-F
A3A1R56	0757-0346	2		RESISTOR 10 1% .125W F TC=0+-100	24546	C4-1/8-T0-10R0-F
A3A1R57				NOT ASSIGNED		
A3A1R58	0698-3450	9	1	RESISTOR 42.2K 1% .125W F TC=0+-100	24546	C4-1/8-T0-4222-F
A3A1R59	0757-0280	3		RESISTOR 1K 1% .125W F TC=0+-100	24546	C4-1/8-T0-1001-F
A3A1R60	0757-0280	3		RESISTOR 1K 1% .125W F TC=0+-100	24546	C4-1/8-T0-1001-F
A3A1R61	0757-0280	3		RESISTOR 1K 1% .125W F TC=0+-100	24546	C4-1/8-T0-1001-F
A3A1R62	0757-0280	3		RESISTOR 1K 1% .125W F TC=0+-100	24546	C4-1/8-T0-1001-F
A3A1R63				NOT ASSIGNED		
A3A1R64				NOT ASSIGNED		
A3A1R65	0698-0085	0	1	RESISTOR 2.61K 1% .125W F TC=0+-100	24546	C4-1/8-T0-2611-F
A3A1R66	0698-3154	0	1	RESISTOR 4.22K 1% .125W F TC=0+-100	24546	C4-1/8-T0-4221-F
A3A1R67	0757-0290	5	1	RESISTOR 6.19K 1% .125W F TC=0+-100	19701	MF4C1/8-T0-6191-F
A3A1R68	0698-3160	8	1	RESISTOR 31.6K 1% .125W F TC=0+-100	24546	C4-1/8-T0-3162-F
A3A1R69	0757-0442	9		RESISTOR 10K 1% .125W F TC=0+-100	24546	C4-1/8-T0-1002-F
A3A1R70				NOT ASSIGNED		
A3A1R71	0698-3447	4	1	RESISTOR 422 1% .125W F TC=0+-100	24546	C4-1/8-T0-422R-F
A3A1R72*	0698-3449	6	1	RESISTOR 28.7K 1% .125W F TC=0+-100	24546	C4-1/8-T0-2872-F
A3A1TP1	1251-0600	0	5	CONNECTOR-SGL CONT PIN 1.14-MM-BSC-SZ SQ	28480	1251-0600
A3A1TP2	1251-0600	0		CONNECTOR-SGL CONT PIN 1.14-MM-BSC-SZ SQ	28480	1251-0600
A3A1TP3	1251-0600	0		CONNECTOR-SGL CONT PIN 1.14-MM-BSC-SZ SQ	28480	1251-0600
A3A1TP4	1251-0600	0		CONNECTOR-SGL CONT PIN 1.14-MM-BSC-SZ SQ	28480	1251-0600
A3A1TP5	1251-0600	0		CONNECTOR-SGL CONT PIN 1.14-MM-BSC-SZ SQ	28480	1251-0600
A3A1U1	1820-1423	4	2	IC MV TTL LS MONOSTBL RETRIG DUAL	01295	SN74LS123N
A3A1U2	1820-1417	6	1	IC GATE TTL LS NAND QUAD 2-INP	01295	SN74LS26N
A3A1U3	1820-1281	2	1	IC DCDR TTL LS 2-TO-4-LINE DUAL 2-INP	01295	SN74LS139N
A3A1U4	1820-1112	8	2	IC FF TTL LS D-TYPE POS-EDGE-TRIG	01295	SN74LS74AN
A3A1U5	1820-1196	8	2	IC FF TTL LS D-TYPE POS-EDGE-TRIG COM	01295	SN74LS174N
A3A1U6	1820-1196	8		IC FF TTL LS D-TYPE POS-EDGE-TRIG COM	01295	SN74LS174N
A3A1U7	1820-0471	0	1	IC INV TTL HEX 1-INP	01295	SN7406N
A3A1U8	1826-0319	7	2	IC OP AMP LOW-BIAS-H-IMPD TO-99 PKG	04713	LF356G
A3A1U9	1820-1423	4		IC MV TTL LS MONOSTBL RETRIG DUAL	01295	SN74LS123N
A3A1U10	1820-1212	9	1	IC FF TTL LS J-K NEG-EDGE-TRIG	01295	SN74LS112AN
A3A1U11	1820-1201	6	1	IC GATE TTL LS AND QUAD 2-INP	01295	SN74LS08N
A3A1U12	1820-1112	8		IC FF TTL LS D-TYPE POS-EDGE-TRIG	01295	SN74LS74AN
A3A1U13	1820-0475	4	1	IC COMPARATOR HS TO-99 PKG	27014	LM306H
A3A1U14	1826-0319	7		IC OP AMP LOW-BIAS-H-IMPD TO-99 PKG	04713	LF356G
A3A1U15	1820-1425	6	1	IC SCHMITT-TRIG TTL LS NAND QUAD 2-INP	01295	SN74LS132N
A3A1U16	1820-1298	1	1	IC MUXR/DATA-SEL TTL LS 8-TO-1-LINE	01295	SN74LS251N
A3A1U17	1820-1197	9	1	IC GATE TTL LS NAND QUAD 2-INP	01295	SN74LS00N
A3A1U18	1820-1216	3	1	IC DCDR TTL LS 3-TO-8-LINE 3-INP	01295	SN74LS138N

*Indicates factory selected value

TABLE 1. A3A1, REPLACEABLE PARTS (3 OF 3)

Reference Designation	HP Part Number	C D	Qty	Description	Mfr Code	Mfr Part Number
A3A1VR1	1902-3224	1	2	DIODE-ZNR 17.8V 5% DO-35 PD=.4W	28480	1902-3224
A3A1VR2	1902-3224	1		DIODE-ZNR 17.8V 5% DO-35 PD=.4W	28480	1902-3224
A3A1VR3	1902-3182	0	1	DIODE-ZNR 12.1V 5% DO-35 PD=.4W	28480	1902-3182
A3A1VR4	1902-0041	4	2	DIODE-ZNR 5.11V 5% DO-35 PD=.4W	28480	1902-0041
A3A1VR5	1902-0041	4		DIODE-ZNR 5.11V 5% DO-35 PD=.4W	28480	1902-0041
				MISCELLANEOUS PARTS		
	4040-0749	4	2	EXTR-PC 8D BRN POLYC .062-BD-THKNS	28480	4040-0749

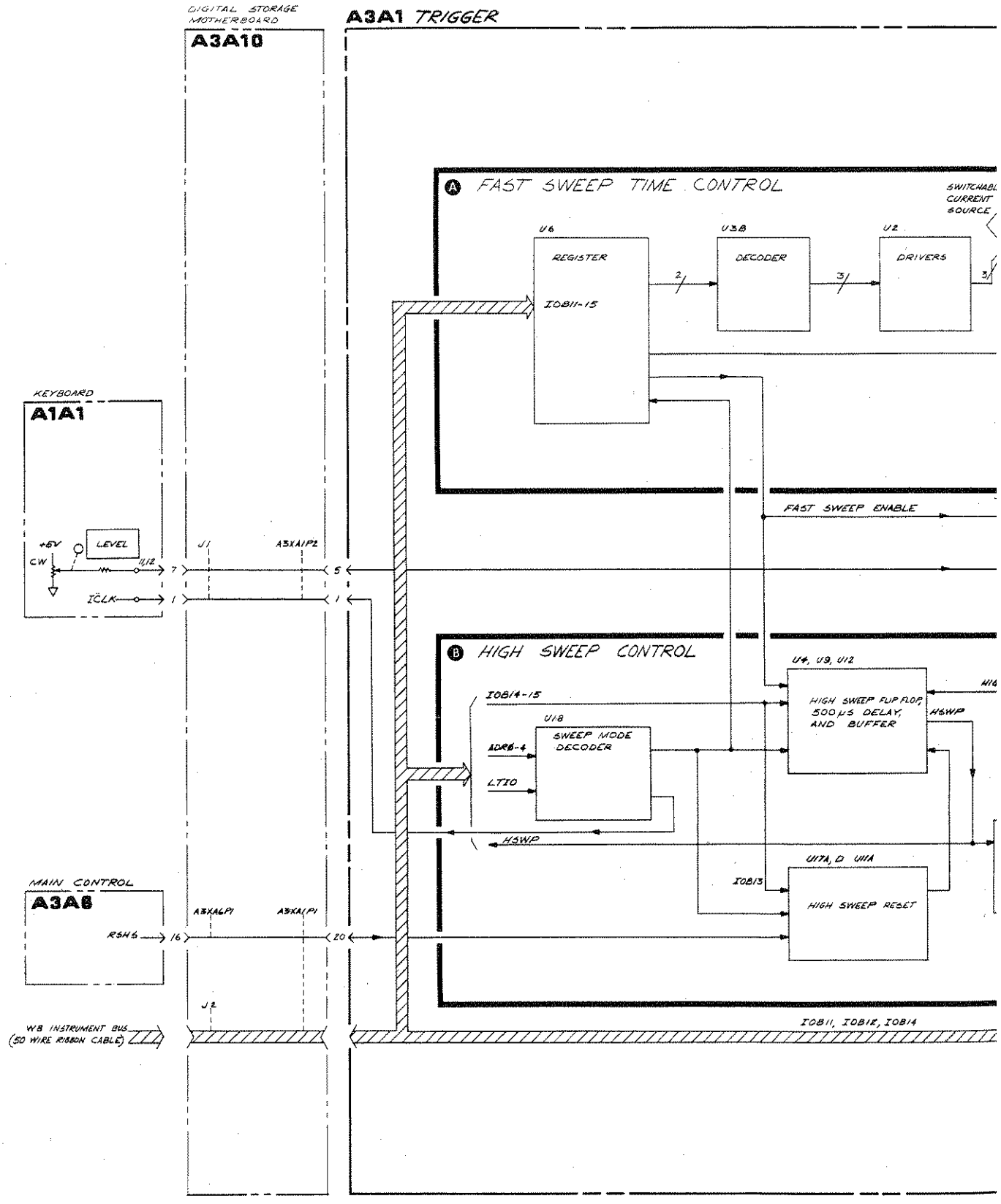
DIGITAL STORAGE MOTHERBOARD
A3A10
A3A1 TRIGGER
A FAST SWEEP TIME CONTROL
SWITCHABL CURRENT SOURCE
U6
REGISTER
IOB11-15
U3B
DECODER
U2
DRIVERS
KEYBOARD
A1A1
+5V
LEVEL
CW
ICLK
J1
A3XA1P2
FAST SWEEP ENABLE
B HIGH SWEEP CONTROL
U4, U9, U12
IOB14-15
U18
SWEEP MODE DECODER
ADRB-4
LTIO
HIGH SWEEP FLIP FLOP, 500 µS DELAY, AND BUFFER
H6WP
HSWP
U17A, D U11A
IOB13
HIGH SWEEP RESET
MAIN CONTROL
A3A8
RSH6
A3XA2P1
A3XA1P1
J2
W8 INSTRUMENT BUS (50 WIRE RIBBON CABLE)
IOB11, IOB12, IOB14

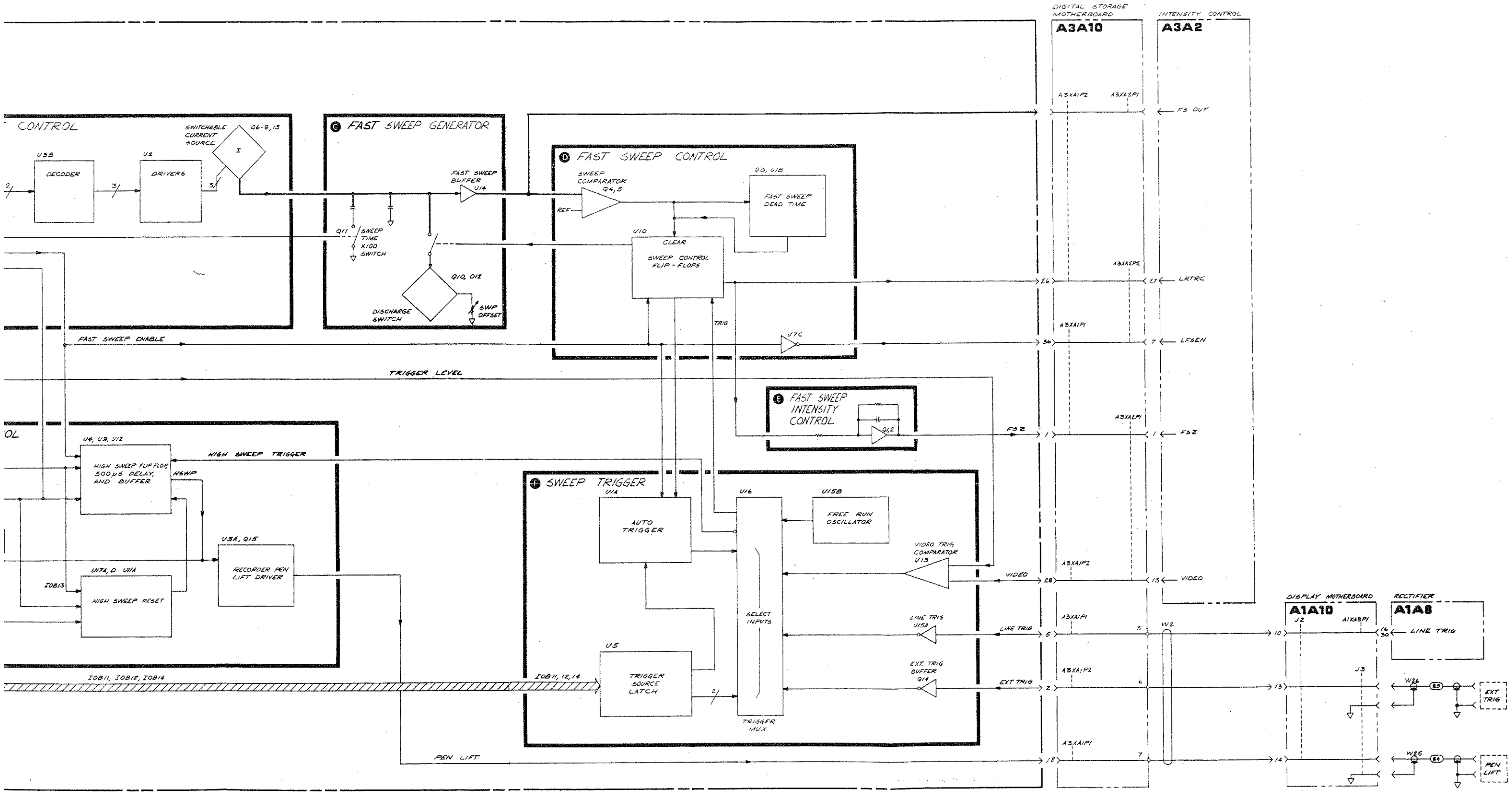

A3A1

FIGURE 4. A3A1 TRIGGER, BLOCK DIAGRAM

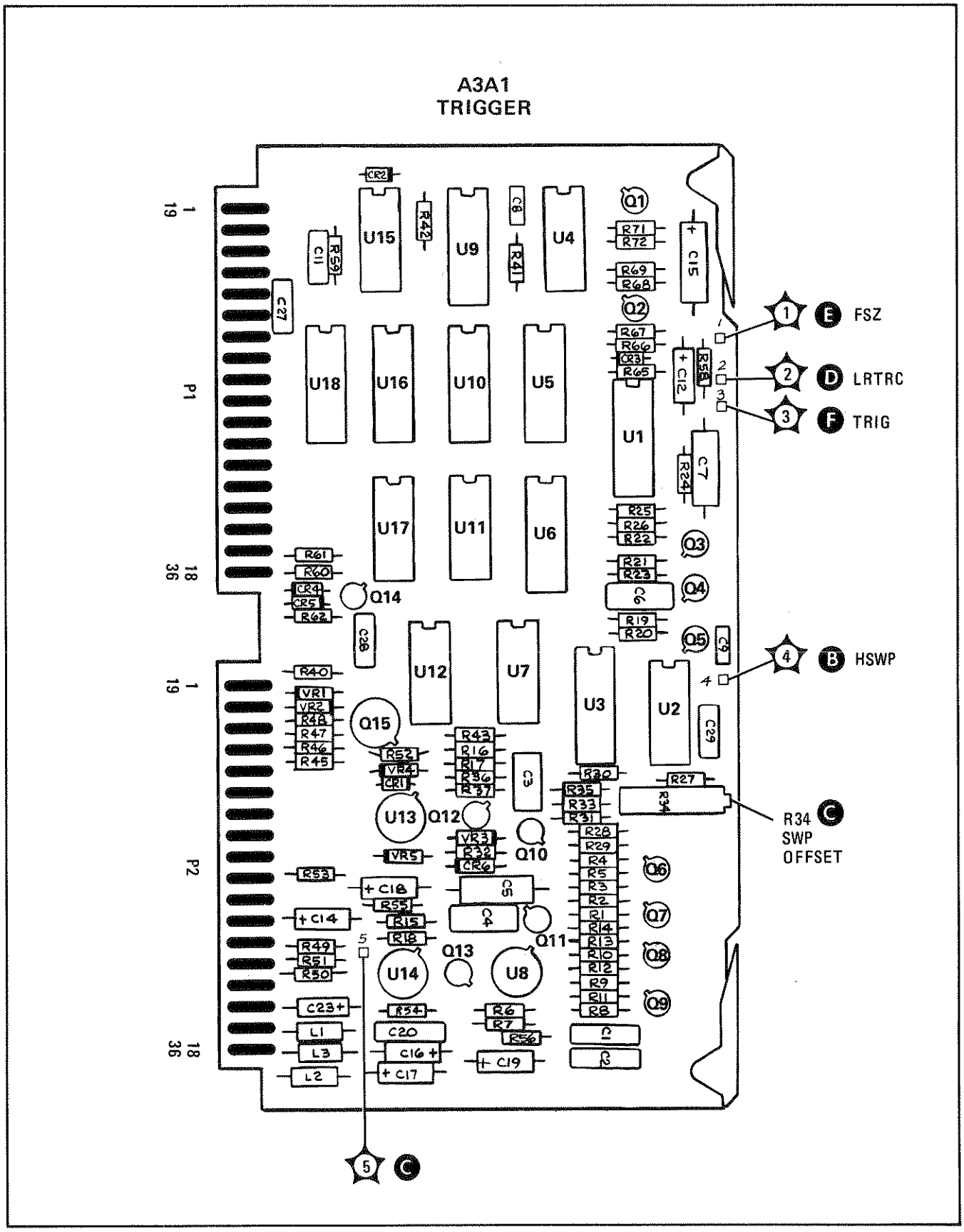

FIGURE 5. A3A1 TRIGGER, COMPONENT LOCATIONS

A3A1 TRIGGER
85662-60014

P1

PIN	SIGNAL	TO/FROM	FUNCTION BLOCK
1	FSZ	A3A2P1-1	E
19	LTIO	A3A10J2-49	B
2	NC		
20	RSHS	A3A6P1-16	B
3	NC		
21	HSWP	A3A10J1-7	
4	NC		
22	NC		
5	LINE TRIG	A3A10W2-10	F
23	NC		
6	NC		
24	NC		
7	NC		
25	NC		
8	NC		
26	ADR4	A3A10J2-27	B
9	ADR3	A3A10J2-26	B
27	ADR2	A3A10J2-25	B
10	ADR1	A3A10J2-24	B
28	ADRØ	A3A10J2-23	B
11	IOB15	A3A10J2-18	A B
29	IOB14	A3A10J2-17	A B
12	IOB13	A3A10J2-16	A B
30	IOB12	A3A10J2-15	A B
13	IOB11	A3A10J2-14	A B
31	NC		
14	NC		
32	NC		
15	NC		
33	NC		
16	NC		
34	NC		
17	NC		
35	NC		
18	PEN LIFT	A3A10W2-14	B
36	LFSEN	A3A2P2-7	D

P2

PIN	SIGNAL	TO/FROM	FUNCTION BLOCK
1	ICLK	A3A10J1-8	B
19	NC		
2	EXT TRIG	A3A10W2-13	F
20	NC		
3	NC		
21	NC		
4	NC		
22	NC		
5	TRIG LEVEL	A3A10J1-14	F
23	NC		
6	NC		
24	NC		
7	NC		
25	NC		
8	NC		
26	LATRC	A3A2P2-27	
9	NC		
27	VGND	A3A2P1-11	G
10	NC		
28	VIDEO	A3A2P1-12	F
11	NC		
29	VGND	A3A2P1-13	G
12	NC		
30	FS OUT	A3A2P1-15	C
13	NC	NOTE 8	
31	NC	NOTE 8	
14	NC		
32	NC		
15	NC		
33	NC		
16	DGND		G
34	DGND		G
17	+5V		G
35	AGND		G
18	+15V		G
36	-15V		G

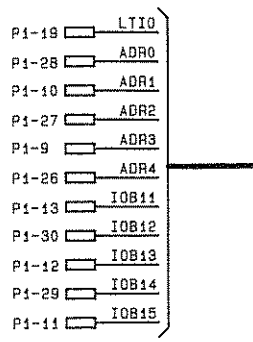

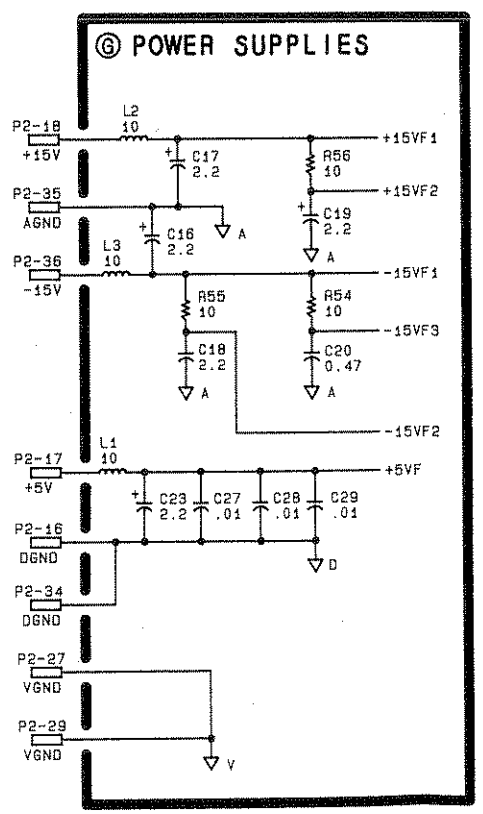

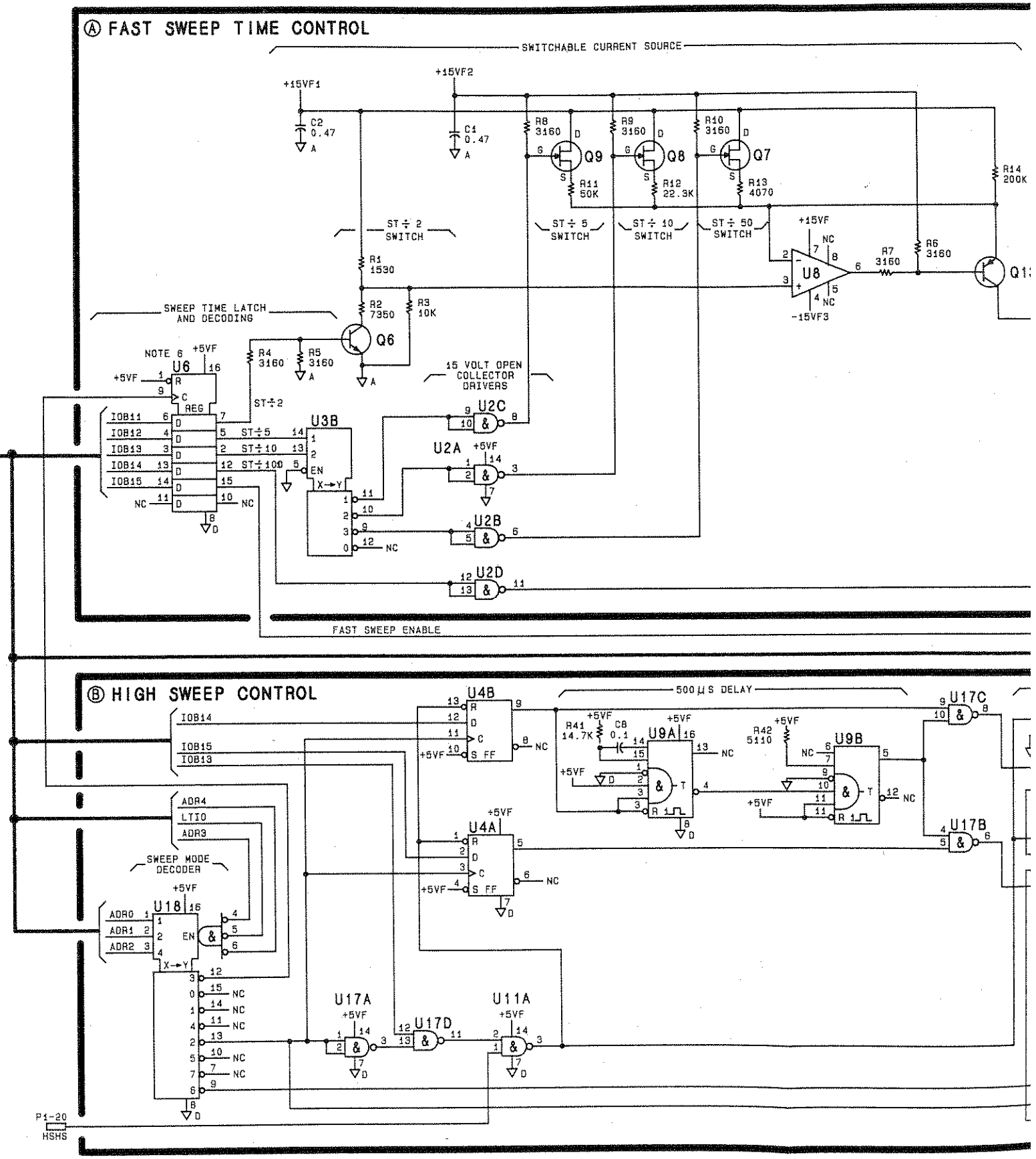

SERIAL PREFIX: 2403A

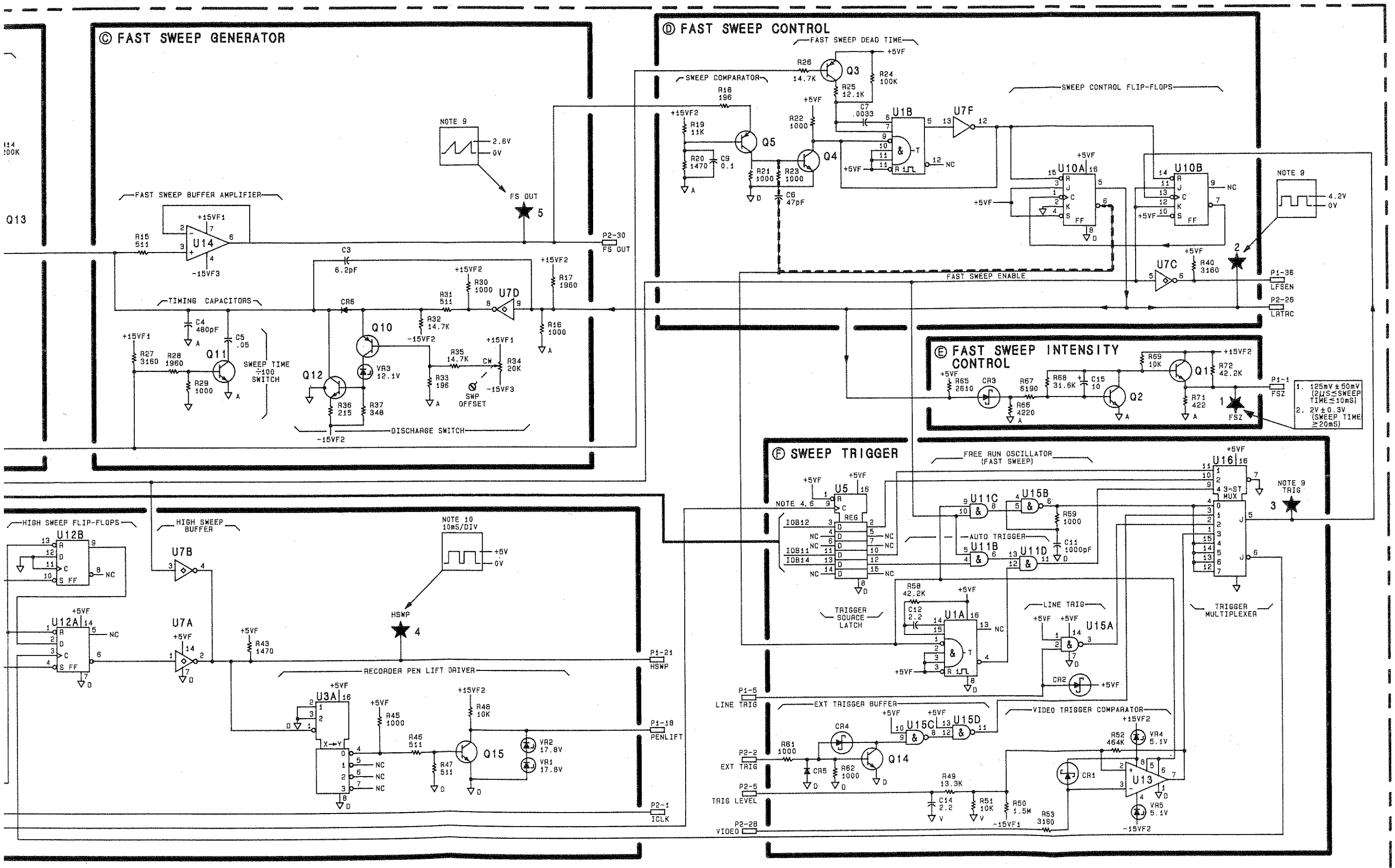

NOTES:

1. REFERENCE DESIGNATORS WITHIN THIS ASSEMBLY ARE ABBREVIATED FOR COMPLETE REFERENCE DESIGNATION, PREFIX ABBREVIATION W ASSEMBLY DESIGNATION.
2. UNLESS OTHERWISE INDICATED: RESISTANCE IS IN OHMS (Ω) CAPACITANCE IS IN MICROFARADS INDUCTANCE IS IN MICROHENRIES
3. MNEMONIC TABLE:

MNEMONIC	DESCRIPTION
ADRØ-4	INSTRUMENT BUS ADD BITS Ø-4 (HIGH=TRU
EXT TRIG	EXTERNAL TRIGGER
LFSEN	FAST SWEEP ENABLE
FS OUT	FAST SWEEP OUT
FSZ	FAST SWEEP Z-AXIS (INTENSITY)
HSWP	HIGH SWEEP
IOB11-15	INSTRUMENT BUS DAT BITS 11-15 (HIGH=T
ICLK	INDICATOR CLOCK (FRONT PANEL LEDS)
LINE TRIG	LINE TRIGGER
LTIO	LOW-TOP BOX I/O ST
PEN LIFT	CHART RECORDER PEN (+15V=LIFT)
LATRC	FAST SWEEP RETRACE (LOW=RETRACE)
RSHS	RESET HIGH SWEEP
TRIG LEVEL	TRIGGER LEVEL (FRO FRONT PANEL CONTRO
VIDEO	VIDEO SIGNAL, 0-2V

4. TRIGGER SOURCE ADDRESS:

U16 PIN 10	U16 PIN 11	TRIGGER
0	0	FREE RU
0	1	EXT
1	0	LINE
1	1	VIDEO

5. AUTO TRIGGERING TRUTH TABLE:

U5 PIN 12	FAST SWEEP TRIGG
1	AUTO TRIGGER
0	NORMAL MODE (SHIFT VIDEO, EXT)

6. FAST SWEEP TIME TRUTH TABLE:

FAST SWEEP TIME	U6 PIN12 ÷100	U6 PIN2 ÷10	U6 PIN5 ÷5
10mS	0	0	0
5	0	0	1
2	0	1	0
1	0	1	1
500µS	1	0	0
200	1	0	1
100	1	1	0
50	1	1	1
20	1	0	0
10	1	0	1
5	1	1	0
2	1	1	1
1	1	1	1

7. UNLESS OTHERWISE INDICATED LOGIC ARE TTL: +2.0V TO +5.0V=LOGIC "1" =HIGH 0V TO +0.8V=LOGIC "0" =LOW
8. P2-13,31 USED FOR SIGNAL FEEDTH ON A3A10 DIGITAL STORAGE MOTHER
9. SEE TROUBLESHOOTING HINTS FOR TH BOARD.
10. FOR SWEEP TIMES ≤ 10mS, TP4 IS TTL LOW SIGNAL. TEST WAVEFORM I OBTAINED BY SHORTING A14TP11 TO AND THEN PUSHING INSTRUMENT PRE
11. UNLESS OTHERWISE INDICATED: SIGNALS ENTER AT LEFT SIDE AND RIGHT SIDE OF FUNCTION BLOCKS.

A3A

FIGURE 6. A3A1 TRIGGER, SCHEMATIC DI
A3A1

A3A2 INTENSITY CONTROL, CIRCUIT DESCRIPTION

A3A2 Intensity Control provides the following functions:

- It receives ΔX and ΔY signals from A3A3 Line Generator, approximates the line length, and controls the Z-axis level to the display.
- It sets and controls the duration of the Line Generator drawing period, which is either 4 μsec or 19 μsec, depending on the approximate line length.
- It provides drive signals to Line Generator switches.
- It controls all display blanking.
- It multiplexes digital storage (Line Generator) X, Y, Z, and blanking with direct display of fast sweep, video, fast sweep Z, and retrace blanking.

Intensity level is modulated as a function of ΔX and ΔY. The Line Generator Z-Axis circuit receives ΔX and ΔY from A3A3 Line Generator. The magnitudes of ΔX and ΔY are summed together to approximate line length. The output of the Line Generator Z-Axis circuit goes to the Bright circuit, which sets the Z-axis signal to maximum when bright lines are drawn. The signal from the Bright circuit is multiplexed with the FSZ signal from A3A1 Trigger and becomes the Z signal to the display. The Z signal also goes to the AUX Z circuit, where Z and AUX BLANK are combined to form the AUX Z signal.

The line length approximation from the Line Generator Z-Axis circuit goes to the Long Line Comparator, which decides whether the line should be drawn as a long line (19 μsec drawing time) or a short line (4 μsec drawing time). This decision is stored at the Input Register and sent to the A3A3 Line Generator as the LLL signal. It goes with LGCLK to the Long Line/Short Line Timing circuit, which generates the timing signals necessary to control the Line Generator setup and drawing periods. The signal INTR is used by A3A6 Main Control to determine when to send new X and Y values to the Line Generator. The timing signals also go to the Integrator Switch Driver and to the Sample and Hold Driver, which form the drive signals needed for the Line Generator.

Control of display blanking begins at the Input Register. Blank and blink information is held in the register during the line drawing period. The Blanking Logic circuit controls all display blanking. It unblanks, blanks, or blinks lines as required by the Input Register. It multiplexes digital storage blanking with fast-sweep retrace blanking.

Fast Scan Trigger Detect and Bus Buffer circuits are used to provide information to A3A6 Main Control to create the digital storage display.

Line Generator Z-Axis (J)

ΔX and ΔY are received from A3A3 Line Generator. U17 and associated circuitry is a magnitude detector. For positive ΔX, CR1 is forward biased, U17 output goes negative, and CR2 cathode is at 0V. For negative ΔX, CR1 is reverse biased, U17 output goes positive, and CR2 cathode is $-\Delta X$ volts (or $|\Delta X|$). Since R15 = 2R7 = R1, the signal at CR5 anode due to ΔX alone is $-|\Delta X|$. When added to the output of the ΔY magnitude detector, the signal at CR5 anode is $(-|\Delta X| - |\Delta Y|)$, which is a rough approximation of line length. The signal at CR7 anode is equal to the signal at CR5 anode except when CR5 anode is more positive than −0.1V. R16 and R17 prevent CR7 anode from rising above −0.1V.

The line length signal $(-|\Delta X| - |\Delta Y|)$ is sampled by U5 during the setup period of A3A3 Line Generator. Switches Q2 and Q4 are closed during sampling. The signal is held on C3 during the drawing period. Switches Q1 and Q3 are closed during the hold mode.

For dim lines, the DIM signal is high, and switch A of analog switch U1A is closed to lower the gain of the Sample and Hold circuit.

U1A switch D is closed during long lines (19 μsec drawing period).

Bright (K)

For bright lines (BRIGHT signal high), switch C of U1B is closed to set the signal LGZ to +2V.

Digital Storage/Fast Scan Mux (M)

This circuit provides multiplexing between the digital storage display (Line Generator) and the fast scan display (video and fast sweep). For the digital storage display, LGX, LGY, and LGZ are connected to X, Y, and Z by U15 and U14. For the fast scan display, FS OUT (fast sweep output), VIDEO, and FSZ (fast sweep Z axis) are selected.

Long Line Comparator (L)

The Long Line Comparator receives the line length approximation from CR7 cathode and compares it with the long-line threshold (LL THRESHOLD adjustment R12). U4 pin 7 goes high when the approximation has greater magnitude than the threshold.

Input Register (C)

The signal from the Long Line Comparator and line intensity information are stored in the Input Register when a positive edge occurs on the INTR line. The Input Register is updated for each line drawn on the display. Signal FS is used to select the fast scan display (fast sweep and video).

Blink (D)

The output of U12 is a 1-Hz signal with a 90 percent duty cycle. When enabled by the BLINK command stored in the Input Register, this signal causes display blinking.

Long Line/Short Line Timing (B)

This circuit receives signal LGCLK from A3A7 Interface and signal LL from the Input Register. It generates signal INTR, which is a string of 1 μsec pulses. When LL is low the pulses are spaced 5 μsec apart; when LL is high the pulses are 20 μsec apart. This provides the timing signals for the 4 and 19 μsec Line Generator drawing periods and 1 μsec setup period.

Integrator Switch Driver (E)

This circuit provides the drive signals for the Integrator switches in A3A3 Line Generator. Q13 and Q14 form a complementary driver. When the input is low, Q13 is on and Q14 is off, setting INTG to −5V and LINTG to 4.7V nominal. When the input is high, Q13 is off and 14 is on, setting INTG to +7.3V nominal and LINTG to −5V.

Sample and Hold Switch Driver (G)

This circuit provides the drive signals for the Sample and Hold circuits of the Line Generator X, Y, and Z axes. Q10 and Q12 form a complementary driver. A −9.6V reference is provided by Q11 and associated circuitry. Q9 is a level translator. When U11 pin 11 goes low, Q9 collector goes to −10.3V, turning Q10 off and Q12 on. Signals HLDX and HLDY go to 0V, and signal SMPL goes to −7.6V nominal. When U11 pin 11 goes high, Q9 collector goes to −8.9V, turning Q10 on and Q12 off. SMPL goes to 0V and Q10 collector goes to −8.4V nominal. Potentiometers R50 (X S&H BAL) and R51 (Y S&H BAL) are used to adjust the HLDX and HLDY

drive levels to A3A3 Line Generator. C18 and Q5 speed the rise time of the HLDX and HLDY signals. As U11 pin 11 goes from high to low, the base of Q5 goes low, causing Q5 to turn on and the HLDX and HLDY signals to rise almost instantaneously.

Blanking Logic (F)

This circuit provides all display blanking. It multiplexes the retrace blanking of the fast scan display (direct video and fast sweep) with the digital storage blanking. For the digital storage display it provides blanking or unblanking as specified by signals LLGBLANK, BLINK, DOTEN, and INTR. R30, R27, C16, R28, R32, and C15 are delay circuits which match the delay of the LBLANK signal to the delay of the Line Generator. R31, R29, and C14 match the retrace blanking delay to the fast sweep delay.

AUX Z (N)

The AUX Z circuit receives the LBLANK signal from the Blanking Logic and the Z signal from the Digital Storage/Fast Scan Mux. It generates the AUX BLANK and AUX Z signals. R65 and R62 convert the 0 – 2V range of Z to the 0 – 1V range necessary for variation of AUX Z intensity. U8 is a voltage follower with Q6 providing a high current output.

Blanking causes the AUX Z signal to drop to – 1V or less. When AUX BLANK goes high, Q7 turns off and Q8 turns on, causing AUX Z to go negative. When AUX BLANK IS LOW, Q7 is on and Q8 is off.

Fast Scan Trigger Detect (H)

This circuit is used to detect the occurrence of a fast scan trigger. When LRTRC, the retrace signal, goes high, a fast scan has been triggered. Flip-flop U18B is set by the positive edge of LRTRC. U18B is reset by LRSTO.

Bus Buffer (I)

This circuit buffers status signals onto the Digital Storage Bus.

A3A2 INTENSITY CONTROL, TROUBLESHOOTING

The A3A2 Intensity Control Assembly modulates the Z-Axis intensity, controls the A3A3 Line Generator drawing period, controls the display blanking, and multiplexes Digital Storage with the fast sweep video for sweep times less than 20 ms.

Digital Storage Test Program 4 is used to troubleshoot this assembly. Table 1 lists the voltages that are present at various nodes in the Line Generator Z-Axis **(J)**. Depending on the persistence of the oscilloscope the waveforms will appear either as dots or vertical line segments. If any of the sample and hold FETs A3A2 Q1 – Q4 are defective, it is easier to replace all four than to isolate the defective component.

TABLE 1. LINE GENERATOR Z-AXIS VOLTAGES

A3A2R12	P1-36	U17 pin 6	P1-34	U16 pin 6	U9 pin 6	U5 pin 6
LL (CW)	+2V to −6V	−0.5V to +6V	+2V to −9V	−0.5V to +9V	0 to +9V	0 to +6V
SL (CCW)	+5V to −6V	−0.5V to +6V	+2V to −9V	−0.5V to +9V	0 to +9V	0 to +14V

Disabling the blanking signal can be helpful when troubleshooting labels that are shifted from their proper positions. This is done by grounding one input to U7D. This can be accomplished without removing the board by running a jumper from ground to A3A2R32, the resistor nearest to the LG/FS CAL connector, A3A2J2.

The following program draws either a horizontal or a vertical line on the CRT. It is useful for troubleshooting problems associated with dynamic operation of the Z-Axis Line Generator. A better understanding of the operation of the Z-Axis Line Generator will be gained by keying in this program and observing the waveforms while reading the circuit description.

Key in the following:

	Comments
Instrument Preset	
[BLANK] TRACE A	
[BLANK] TRACE B	
[SHIFT] Recorder Upper Right	WRITE:
1056 Hz	(Skip Page)
[SHIFT] Recorder Lower Left	DSPL ADRS
0 Hz	
[SHIFT] Recorder Upper Right	WRITE:
1026 Hz	Vector Command
0 Hz 0 Hz	X, Y PAIR 1
1023 Hz 0 Hz	X, Y PAIR 2
0 Hz 0 Hz	X, Y PAIR 3
1056 Hz	(Skip Page)
[SHIFT] Recorder Lower Left	DSPL ADRS
2048 Hz	
[SHIFT] Recorder Upper Right	WRITE:
1056 Hz	(Skip Page)

To switch to a vertical line, key in:

SHIFT Recorder Lower Left
3 Hz
SHIFT Recorder Upper Right
0 Hz
1023 Hz

The waveforms in Figure 1 show the voltages for the ΔX and X components. For a vertical line, the waveforms are identical at the corresponding nodes in the ΔY and Y channels.

Oscilloscope settings:
Vertical: 5V/div
Sweeptime: 10μs/div
Ext trigger: A3A2 P2-23
Analyzer Settings:
A3A2R12: Fully CCW

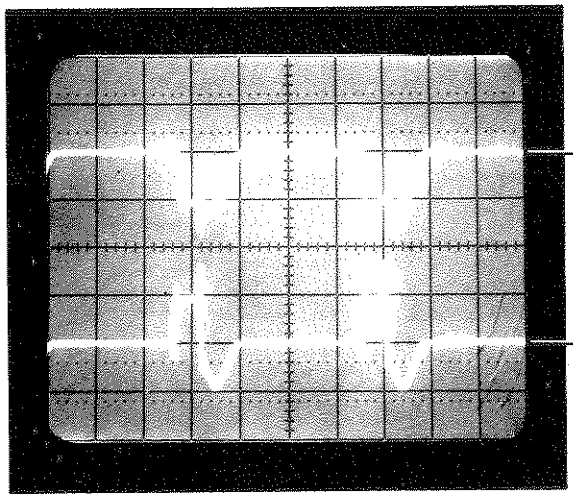

a. Magnitude Detector Output

Oscilloscope Settings:
Vertical: 5V/div
Sweeptime: 10μs/div
Ext trigger: A3A2 P2-23
Analyzer Settings:
A3A2R12: Fully CCW

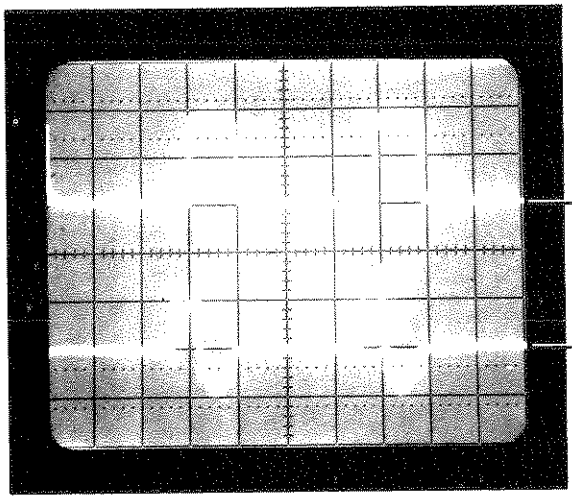

b. Sample and Hold Output

Oscilloscope Settings:
Vertical: 1V/div
Sweeptime: 10μs/div
Ext trigger: A3A2 P2-23
Analyzer Settings:
A3A2R12: Fully CCW

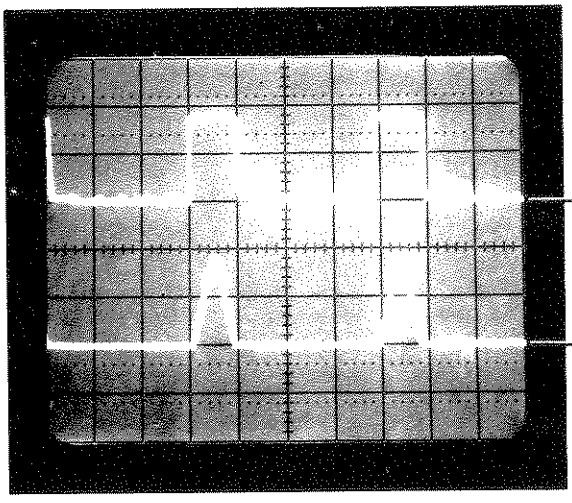

c. Z and X Outputs

FIGURE 1. INTENSITY CONTROL WAVEFORMS

TABLE 2. A3A2, REPLACEABLE PARTS (1 OF 3)

Reference Designation	HP Part Number	C D	Qty	Description	Mfr Code	Mfr Part Number
A3A2	85662-60025	9	1	BOARD ASSEMBLY, INTENSITY CONTROL	28480	85662-60025
A3A2C1	0160-2249	3	1	CAPACITOR-FXD 4.7PF +-.25PF 500VDC CER	28480	0160-2249
A3A2C2	0160-2264	2	2	CAPACITOR-FXD 20PF +-5% 500VDC CER 0+-30	28480	0160-2264
A3A2C3	0160-3067	5	1	CAPACITOR-FXD 200PF +-5% 300VDC MICA	28480	0160-3067
A3A2C4	0160-2202	8	1	CAPACITOR-FXD 75PF +-5% 300VDC MICA	28480	0160-2202
A3A2C5	0160-4084	8	17	CAPACITOR-FXD .1UF +-20% 50VDC CER	28480	0160-4084
A3A2C6	0180-0228	6	1	CAPACITOR-FXD 22UF+-10% 15VDC TA	56289	150D226X9015B2
A3A2C7	0180-0374	3	3	CAPACITOR-FXD 10UF+-10% 20VDC TA	56289	150D106X9020B2
A3A2C8	0180-0374	3		CAPACITOR-FXD 10UF+-10% 20VDC TA	56289	150D106X9020B2
A3A2C9	0180-0374	3		CAPACITOR-FXD 10UF+-10% 20VDC TA	56289	150D106X9020B2
A3A2C10	0160-2055	9	3	CAPACITOR-FXD .01UF +80-20% 100VDC CER	28480	0160-2055
A3A2C11	0160-2055	9		CAPACITOR-FXD .01UF +80-20% 100VDC CER	28480	0160-2055
A3A2C12				NOT ASSIGNED		
A3A2C13	0160-4084	8		CAPACITOR-FXD .1UF +-20% 50VDC CER	28480	0160-4084
A3A2C14	0160-2257	3	1	CAPACITOR-FXD 10PF +-5% 500VDC CER 0+-60	28480	0160-2257
A3A2C15	0160-2264	2		CAPACITOR-FXD 20PF +-5% 500VDC CER 0+-30	28480	0160-2264
A3A2C16	0140-0192	9	1	CAPACITOR-FXD 68PF +-5% 300VDC MICA	72136	DM15E680J0300WV1CR
A3A2C17	0160-4084	8		CAPACITOR-FXD .1UF +-20% 50VDC CER	28480	0160-4084
A3A2C18	0160-2204	0	1	CAPACITOR-FXD 100PF +-5% 300VDC MICA	28480	0160-2204
A3A2C19	0160-4084	8		CAPACITOR-FXD .1UF +-20% 50VDC CER	28480	0160-4084
A3A2C20	0160-4084	8		CAPACITOR-FXD .1UF +-20% 50VDC CER	28480	0160-4084
A3A2C21	0160-4084	8		CAPACITOR-FXD .1UF +-20% 50VDC CER	28480	0160-4084
A3A2C22	0160-4084	8		CAPACITOR-FXD .1UF +-20% 50VDC CER	28480	0160-4084
A3A2C23	0160-4084	8		CAPACITOR-FXD .1UF +-20% 50VDC CER	28480	0160-4084
A3A2C24	0160-4084	8		CAPACITOR-FXD .1UF +-20% 50VDC CER	28480	0160-4084
A3A2C25	0160-4084	8		CAPACITOR-FXD .1UF +-20% 50VDC CER	28480	0160-4084
A3A2C26	0160-4084	8		CAPACITOR-FXD .1UF +-20% 50VDC CER	28480	0160-4084
A3A2C27	0160-4084	8		CAPACITOR-FXD .1UF +-20% 50VDC CER	28480	0160-4084
A3A2C28	0160-4084	8		CAPACITOR-FXD .1UF +-20% 50VDC CER	28480	0160-4084
A3A2C29	0160-4084	8		CAPACITOR-FXD .1UF +-20% 50VDC CER	28480	0160-4084
A3A2C30	0140-0205	5	1	CAPACITOR-FXD 62PF +-5% 300VDC MICA	72136	DM15E620J0300WV1CR
A3A2C31	0160-4084	8		CAPACITOR-FXD .1UF +-20% 50VDC CER	28480	0160-4084
A3A2C32	0160-4084	8		CAPACITOR-FXD .1UF +-20% 50VDC CER	28480	0160-4084
A3A2C33	0160-4084	8		CAPACITOR-FXD .1UF +-20% 50VDC CER	28480	0160-4084
A3A2C34	0160-2055	9		CAPACITOR-FXD .01UF +80-20% 100VDC CER	28480	0160-2055
A3A2CR1	1901-0040	1	12	DIODE-SWITCHING 30V 50MA 2NS DO-35	28480	1901-0040
A3A2CR2	1901-0040	1		DIODE-SWITCHING 30V 50MA 2NS DO-35	28480	1901-0040
A3A2CR3	1901-0040	1		DIODE-SWITCHING 30V 50MA 2NS DO-35	28480	1901-0040
A3A2CR4	1901-0040	1		DIODE-SWITCHING 30V 50MA 2NS DO-35	28480	1901-0040
A3A2CR5	1901-0518	8	5	DIODE-SM SIG SCHOTTKY	28480	1901-0518
A3A2CR6	1901-0518	8		DIODE-SM SIG SCHOTTKY	28480	1901-0518
A3A2CR7	1901-0518	8		DIODE-SM SIG SCHOTTKY	28480	1901-0518
A3A2CR8	1901-0040	1		DIODE-SWITCHING 30V 50MA 2NS DO-35	28480	1901-0040
A3A2CR9	1901-0040	1		DIODE-SWITCHING 30V 50MA 2NS DO-35	28480	1901-0040
A3A2CR10	1901-0040	1		DIODE-SWITCHING 30V 50MA 2NS DO-35	28480	1901-0040
A3A2CR11	1901-0040	1		DIODE-SWITCHING 30V 50MA 2NS DO-35	28480	1901-0040
A3A2CR12	1901-0040	1		DIODE-SWITCHING 30V 50MA 2NS DO-35	28480	1901-0040
A3A2CR13	1901-0040	1		DIODE-SWITCHING 30V 50MA 2NS DO-35	28480	1901-0040
A3A2CR14	1901-0040	1		DIODE-SWITCHING 30V 50MA 2NS DO-35	28480	1901-0040
A3A2CR15	1901-0518	8		DIODE-SM SIG SCHOTTKY	28480	1901-0518
A3A2CR16	1901-0518	8		DIODE-SM SIG SCHOTTKY	28480	1901-0518
A3A2CR17	1901-0040	1		DIODE-SWITCHING 30V 50MA 2NS DO-35	28480	1901-0040
A3A2J1	1250-0543	8	2	CONNECTOR-RF SM-SNP M PC 50-OHM	28480	1250-0543
A3A2J2	1250-0543	8		CONNECTOR-RF SM-SNP M PC 50-OHM	28480	1250-0543
A3A2L1	9140-0210	1	2	INDUCTOR RF-CH-MLD 100UH 5% .166DX.385LG	28480	9140-0210
A3A2L2	08558-80011	6	1	FILTER COIL BLUE	28480	08558-80011
A3A2L3	9140-0237	2	1	INDUCTOR RF-CH-MLD 200UH 5% .166DX.385LG	28480	9140-0237
A3A2L4				NOT ASSIGNED		
A3A2L5	9140-0210	1		INDUCTOR RF-CH-MLD 100UH 5% .166DX.385LG	28480	9140-0210
A3A2Q1	1855-0081	1	4	TRANSISTOR J-FET N-CHAN D-MODE SI	28480	1855-0081
A3A2Q2	1855-0081	1		TRANSISTOR J-FET N-CHAN D-MODE SI	28480	1855-0081
A3A2Q3	1855-0081	1		TRANSISTOR J-FET N-CHAN D-MODE SI	28480	1855-0081
A3A2Q4	1855-0081	1		TRANSISTOR J-FET N-CHAN D-MODE SI	28480	1855-0081
A3A2Q5	1853-0007	7	6	TRANSISTOR PNP 2N3251 SI TO-18 PD=360MW	04713	2N3251
A3A2Q6	1854-0404	0	3	TRANSISTOR NPN SI TO-18 PD=360MW	28480	1854-0404
A3A2Q7	1853-0034	0	1	TRANSISTOR PNP SI TO-18 PD=360MW	28480	1853-0034
A3A2Q8	1853-0007	7		TRANSISTOR PNP 2N3251 SI TO-18 PD=360MW	04713	2N3251
A3A2Q9	1853-0007	7		TRANSISTOR PNP 2N3251 SI TO-18 PD=360MW	04713	2N3251
A3A2Q10	1854-0404	0		TRANSISTOR NPN SI TO-18 PD=360MW	28480	1854-0404
A3A2Q11	1853-0007	7		TRANSISTOR PNP 2N3251 SI TO-18 PD=360MW	04713	2N3251
A3A2Q12	1854-0404	0		TRANSISTOR NPN SI TO-18 PD=360MW	28480	1854-0404
A3A2Q13	1853-0007	7		TRANSISTOR PNP 2N3251 SI TO-18 PD=360MW	04713	2N3251
A3A2Q14	1853-0007	7		TRANSISTOR PNP 2N3251 SI TO-18 PD=360MW	04713	2N3251

TABLE 2. A3A2, REPLACEABLE PARTS (2 OF 3)

Reference Designation	HP Part Number	C D	Qty	Description	Mfr Code	Mfr Part Number
A3A2R1	0757-0449	6	7	RESISTOR 20K 1% .125W F TC=0+-100	24546	C4-1/8-T0-2002-F
A3A2R2	0757-0449	6		RESISTOR 20K 1% .125W F TC=0+-100	24546	C4-1/8-T0-2002-F
A3A2R3	0757-0449	6		RESISTOR 20K 1% .125W F TC=0+-100	24546	C4-1/8-T0-2002-F
A3A2R4	0757-0449	6		RESISTOR 20K 1% .125W F TC=0+-100	24546	C4-1/8-T0-2002-F
A3A2R5	0757-0449	6		RESISTOR 20K 1% .125W F TC=0+-100	24546	C4-1/8-T0-2002-F
A3A2R6	0757-0449	6		RESISTOR 20K 1% .125W F TC=0+-100	24546	C4-1/8-T0-2002-F
A3A2R7	0757-0442	9	8	RESISTOR 10K 1% .125W F TC=0+-100	24546	C4-1/8-T0-1002-F
A3A2R8	0698-3153	9	2	RESISTOR 3.83K 1% .125W F TC=0+-100	24546	C4-1/8-T0-3831-F
A3A2R9	0698-3156	2	1	RESISTOR 14.7K 1% .125W F TC=0+-100	24546	C4-1/8-T0-1472-F
A3A2R10	0757-0442	9		RESISTOR 10K 1% .125W F TC=0+-100	24546	C4-1/8-T0-1002-F
A3A2R11	0757-0442	9		RESISTOR 10K 1% .125W F TC=0+-100	24546	C4-1/8-T0-1002-F
A3A2R12	2100-3354	9	1	RESISTOR-TRMR 50K 10% C SIDE-ADJ 1-TRN	28480	2100-3354
A3A2R13	0757-0442	9		RESISTOR 10K 1% .125W F TC=0+-100	24546	C4-1/8-T0-1002-F
A3A2R14	0757-0442	9		RESISTOR 10K 1% .125W F TC=0+-100	24546	C4-1/8-T0-1002-F
A3A2R15	0757-0449	6		RESISTOR 20K 1% .125W F TC=0+-100	24546	C4-1/8-T0-2002-F
A3A2R16	0757-0438	3	5	RESISTOR 5.11K 1% .125W F TC=0+-100	24546	C4-1/8-T0-5111-F
A3A2R17*	0757-0470	3	1	RESISTOR 162K 1% .125W F TC=0+-100	24546	C4-1/8-T0-1623-F
A3A2R18	0757-0438	3		RESISTOR 5.11K 1% .125W F TC=0+-100	24546	C4-1/8-T0-5111-F
A3A2R19	0757-0280	3	2	RESISTOR 1K 1% .125W F TC=0+-100	24546	C4-1/8-T0-1001-F
A3A2R20	0757-0442	9		RESISTOR 10K 1% .125W F TC=0+-100	24546	C4-1/8-T0-1002-F
A3A2R21*	0757-0447	4	1	RESISTOR 16.2K 1% .125W F TC=0+-100	24546	C4-1/8-T0-1622-F
A3A2R22	0757-0443	0	1	RESISTOR 11K 1% .125W F TC=0+-100	24546	C4-1/8-T0-1102-F
A3A2R23	0757-0421	4	1	RESISTOR 825 1% .125W F TC=0+-100	24546	C4-1/8-T0-825R-F
A3A2R24	0698-3157	3	3	RESISTOR 19.6K 1% .125W F TC=0+-100	24546	C4-1/8-T0-1962-F
A3A2R25	0757-0280	3		RESISTOR 1K 1% .125W F TC=0+-100	24546	C4-1/8-T0-1001-F
A3A2R26	0757-0442	9		RESISTOR 10K 1% .125W F TC=0+-100	24546	C4-1/8-T0-1002-F
A3A2R27	0757-0422	5	3	RESISTOR 909 1% .125W F TC=0+-100	24546	C4-1/8-T0-909R-F
A3A2R28	0757-0317	7	3	RESISTOR 1.33K 1% .125W F TC=0+-100	24546	C4-1/8-T0-1331-F
A3A2R29	0757-0422	5		RESISTOR 909 1% .125W F TC=0+-100	24546	C4-1/8-T0-909R-F
A3A2R30	0757-0317	7		RESISTOR 1.33K 1% .125W F TC=0+-100	24546	C4-1/8-T0-1331-F
A3A2R31	0757-0317	7		RESISTOR 1.33K 1% .125W F TC=0+-100	24546	C4-1/8-T0-1331-F
A3A2R32	0757-0422	5		RESISTOR 909 1% .125W F TC=0+-100	24546	C4-1/8-T0-909R-F
A3A2R33				NOT ASSIGNED		
A3A2R34	0698-0084	9	1	RESISTOR 2.15K 1% .125W F TC=0+-100	24546	C4-1/8-T0-2151-F
A3A2R35	0757-1094	9	1	RESISTOR 1.47K 1% .125W F TC=0+-100	24546	C4-1/8-T0-1471-F
A3A2R36	0698-3435	0	1	RESISTOR 38.3 1% .125W F TC=0+-100	24546	C4-1/8-T0-38R3-F
A3A2R37	0698-3151	7	1	RESISTOR 2.87K 1% .125W F TC=0+-100	24546	C4-1/8-T0-2871-F
A3A2R38	0757-0398	4	1	RESISTOR 75 1% .125W F TC=0+-100	24546	C4-1/8-T0-75R0-F
A3A2R39	0757-0401	0	2	RESISTOR 100 1% .125W F TC=0+-100	24546	C4-1/8-T0-101-F
A3A2R40	0698-3446	3	2	RESISTOR 383 1% .125W F TC=0+-100	24546	C4-1/8-T0-383R-F
A3A2R41	0757-0438	3		RESISTOR 5.11K 1% .125W F TC=0+-100	24546	C4-1/8-T0-5111-F
A3A2R42	0757-0394	0	2	RESISTOR 51.1 1% .125W F TC=0+-100	24546	C4-1/8-T0-51R1-F
A3A2R43	0757-0401	0		RESISTOR 100 1% .125W F TC=0+-100	24546	C4-1/8-T0-101-F
A3A2R44	0757-0460	1	1	RESISTOR 61.9K 1% .125W F TC=0+-100	24546	C4-1/8-T0-6192-F
A3A2R45	0757-0288	1	1	RESISTOR 9.09K 1% .125W F TC=0+-100	19701	MF4C1/8-T0-9091-F
A3A2R46	0757-0419	0	2	RESISTOR 681 1% .125W F TC=0+-100	24546	C4-1/8-T0-681R-F
A3A2R47	0757-0278	9	1	RESISTOR 1.78K 1% .125W F TC=0+-100	24546	C4-1/8-T0-1781-F
A3A2R48	0698-3155	1	1	RESISTOR 4.64K 1% .125W F TC=0+-100	24546	C4-1/8-T0-4641-F
A3A2R49	0757-0394	0		RESISTOR 51.1 1% .125W F TC=0+-100	24546	C4-1/8-T0-51R1-F
A3A2R50	2100-3351	6	2	RESISTOR-TRMR 500 10% C SIDE-ADJ 1-TRN	28480	2100-3351
A3A2R51	2100-3351	6		RESISTOR-TRMR 500 10% C SIDE-ADJ 1-TRN	28480	2100-3351
A3A2R52	0698-3443	0	1	RESISTOR 287 1% .125W F TC=0+-100	24546	C4-1/8-T0-287R-F
A3A2R53	0757-0438	3		RESISTOR 5.11K 1% .125W F TC=0+-100	24546	C4-1/8-T0-5111-F
A3A2R54	0698-0082	7	1	RESISTOR 464 1% .125W F TC=0+-100	24546	C4-1/8-T0-4640-F
A3A2R55	0757-0438	3		RESISTOR 5.11K 1% .125W F TC=0+-100	24546	C4-1/8-T0-5111-F
A3A2R56	0698-3150	6	1	RESISTOR 2.37K 1% .125W F TC=0+-100	24546	C4-1/8-T0-2371-F
A3A2R57	0757-0428	1	1	RESISTOR 1.62K 1% .125W F TC=0+-100	24546	C4-1/8-T0-1621-F
A3A2R58	0757-0416	7	1	RESISTOR 511 1% .125W F TC=0+-100	24546	C4-1/8-T0-511R-F
A3A2R59	0698-3442	9	1	RESISTOR 237 1% .125W F TC=0+-100	24546	C4-1/8-T0-237R-F
A3A2R60	0698-3446	3		RESISTOR 383 1% .125W F TC=0+-100	24546	C4-1/8-T0-383R-F
A3A2R61	0757-0419	0		RESISTOR 681 1% .125W F TC=0+-100	24546	C4-1/8-T0-681R-F
A3A2R62	0698-3157	3		RESISTOR 19.6K 1% .125W F TC=0+-100	24546	C4-1/8-T0-1962-F
A3A2R63	0698-3153	9		RESISTOR 3.83K 1% .125W F TC=0+-100	24546	C4-1/8-T0-3831-F
A3A2R64	0757-0442	9		RESISTOR 10K 1% .125W F TC=0+-100	24546	C4-1/8-T0-1002-F
A3A2R65	0698-3157	3		RESISTOR 19.6K 1% .125W F TC=0+-100	24546	C4-1/8-T0-1962-F
A3A2R66	0757-0405	4	1	RESISTOR 162 1% .125W F TC=0+-100	24546	C4-1/8-T0-162R-F
A3A2TP1	0360-0535	0	13	TERMINAL TEST POINT PCB	00000	ORDER BY DESCRIPTION
A3A2TP2	0360-0535	0		TERMINAL TEST POINT PCB	00000	ORDER BY DESCRIPTION
A3A2TP3	0360-0535	0		TERMINAL TEST POINT PCB	00000	ORDER BY DESCRIPTION
A3A2TP4	0360-0535	0		TERMINAL TEST POINT PCB	00000	ORDER BY DESCRIPTION
A3A2TP5	0360-0535	0		TERMINAL TEST POINT PCB	00000	ORDER BY DESCRIPTION
A3A2TP6	0360-0535	0		TERMINAL TEST POINT PCB	00000	ORDER BY DESCRIPTION
A3A2TP7	0360-0535	0		TERMINAL TEST POINT PCB	00000	ORDER BY DESCRIPTION
A3A2TP8	0360-0535	0		TERMINAL TEST POINT PCB	00000	ORDER BY DESCRIPTION
A3A2TP9	0360-0535	0		TERMINAL TEST POINT PCB	00000	ORDER BY DESCRIPTION
A3A2TP10	0360-0535	0		TERMINAL TEST POINT PCB	00000	ORDER BY DESCRIPTION

*Indicates factory selected value

TABLE 2. A3A2, REPLACEABLE PARTS (3 OF 3)

Reference Designation	HP Part Number	C D	Qty	Description	Mfr Code	Mfr Part Number
A3A2TP11	0360-0535	0		TERMINAL TEST POINT PCB	00000	ORDER BY DESCRIPTION
A3A2TP12	0360-0535	0		TERMINAL TEST POINT PCB	00000	ORDER BY DESCRIPTION
A3A2TP13	0360-0535	0		TERMINAL TEST POINT PCB	00000	ORDER BY DESCRIPTION
A3A2U1	1820-1548	4	1	IC SWITCH ANLG QUAD 14-DIP-C PKG	3L585	CD4066AY
A3A2U2	1820-1196	8	1	IC FF TTL LS D-TYPE POS-EDGE-TRIG COM	01295	SN74LS174N
A3A2U3	1820-1197	9	1	IC GATE TTL LS NAND QUAD 2-INP	01295	SN74LS00N
A3A2U4	1826-0026	3	1	IC COMPARATOR PRCN TO-99 PKG	01295	LM311L
A3A2U5	1826-0081	8	5	IC OP AMP WB TO-99 PKG	27014	LM318H
A3A2U6	1820-1415	4	1	IC SCHMITT-TRIG TTL LS NAND DUAL 4-INP	01295	SN74LS13N
A3A2U7	1820-1425	6	1	IC SCHMITT-TRIG TTL LS NAND QUAD 2-INP	01295	SN74LS132N
A3A2U8	1826-0081	0		IC OP AMP WB TO-99 PKG	27014	LM318H
A3A2U9	1826-0081	0		IC OP AMP WB TO-99 PKG	27014	LM318H
A3A2U10	1820-1199	1	1	IC INV TTL LS HEX 1-INP	01295	SN74LS04N
A3A2U11	1820-0054	5	1	IC GATE TTL NAND QUAD 2-INP	01295	SN7400N
A3A2U12	1826-0180	0	1	IC TIMER TTL MONO/ASTBL	01295	NE555P
A3A2U13	1820-1432	5	1	IC CNTR TTL LS BIN SYNCHRO POS-EDGE-TRIG	01295	SN74LS163AN
A3A2U14	1826-0417	6	2	IC SWITCH ANLG QUAD 16-DIP-C PKG	27014	LF13333D
A3A2U15	1826-0417	6		IC SWITCH ANLG QUAD 16-DIP-C PKG	27014	LF13333D
A3A2U16	1826-0081	0		IC OP AMP WB TO-99 PKG	27014	LM318H
A3A2U17	1826-0081	0		IC OP AMP WB TO-99 PKG	27014	LM318H
A3A2U18	1820-1112	8	1	IC FF TTL LS D-TYPE POS-EDGE-TRIG	01295	SN74LS74AN
A3A2U19	1820-1491	6	1	IC BFR TTL LS NON-INV HEX 1-INP	01295	SN74LS367AN
A3A2VR1	1902-0554	4	1	DIODE-ZNR 10V 5% PD=1W IR=10UA	28480	1902-0554
A3A2VR2	1902-0025	4	1	DIODE-ZNR 10V 5% DO-35 PD=.4W TC=+.06%	28480	1902-0025
A3A2VR3	1902-3092	1	1	DIODE-ZNR 4.99V 2% DO-35 PD=.4W	28480	1902-3092
A3A2VR4	1902-3139	7	1	DIODE-ZNR 8.25V 5% DO-35 PD=.4W	28480	1902-3139
				MISCELLANEOUS PARTS		
	4040-0750	7	2	EXTR-PC BD RED POLYC .062-BD-THKNS	28480	4040-0750

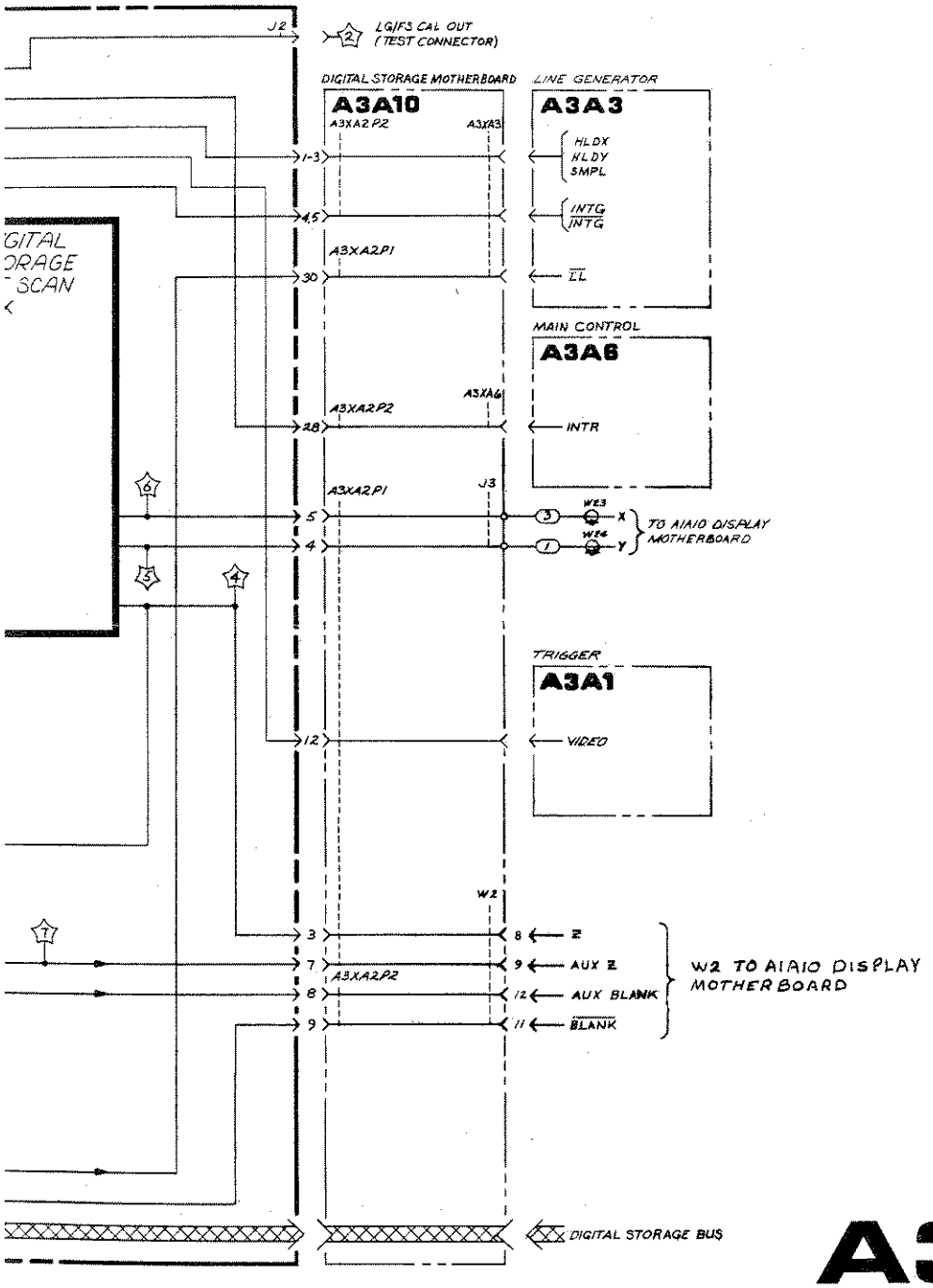

A3A2

FIGURE 3. A3A2 INTENSITY CONTROL, BLOCK DIAGRAM

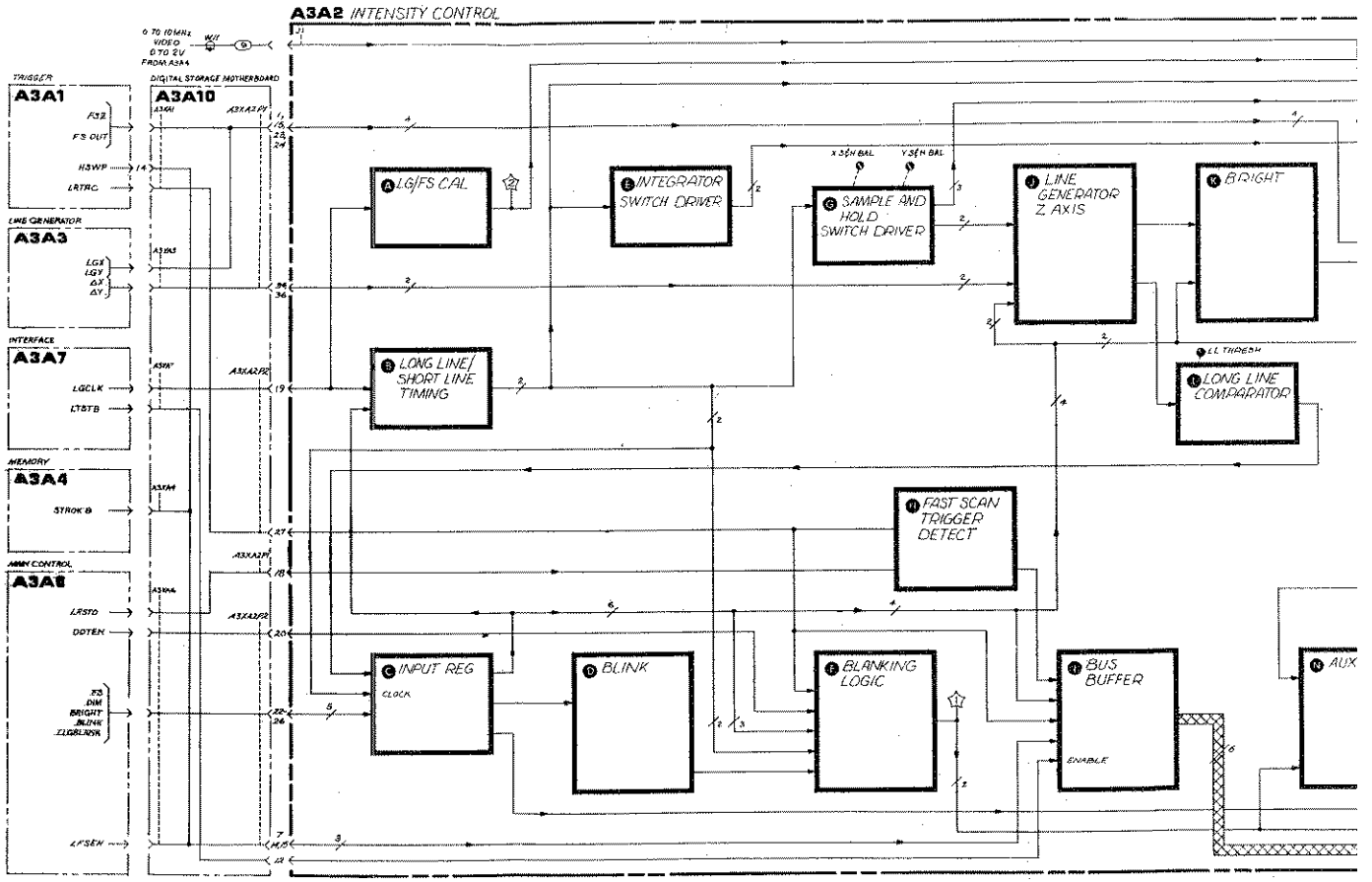
A3A2 INTENSITY CONTROL
0 TO 10 MHz VIDEO 0 TO 2V FROM A3A4
W11
TRIGGER
A3A1
FS2
FS OUT
HSWP
LRTRG
LINE GENERATOR
A3A3
LGX
LGY
ΔX
ΔY
INTERFACE
A3A7
LGCLK
LTSTB
MEMORY
A3A4
STROK B
ARRAY CONTROL
A3A8
LRSTO
DOTEN
FS
DIM
BRIGHT
BLINK
FLYBLANK
LRSEN
DIGITAL STORAGE MOTHERBOARD
A3A10
A3A1
A3A2P1
A3A3
A3A7
A3A4
A3A8
A3A2P2
A3A2P3
A3A2P4
A LG/FS CAL
B LONG LINE/ SHORT LINE TIMING
C INPUT REG
CLOCK
D BLINK
E INTEGRATOR SWITCH DRIVER
F BLANKING LOGIC
G SAMPLE AND HOLD SWITCH DRIVER
X SEN BAL
Y SEN BAL
H FAST SCAN TRIGGER DETECT
I BUS BUFFER
ENABLE
J LINE GENERATOR Z AXIS
K BRIGHT
L LONG LINE COMPARATOR
LL THRESH
K AUX

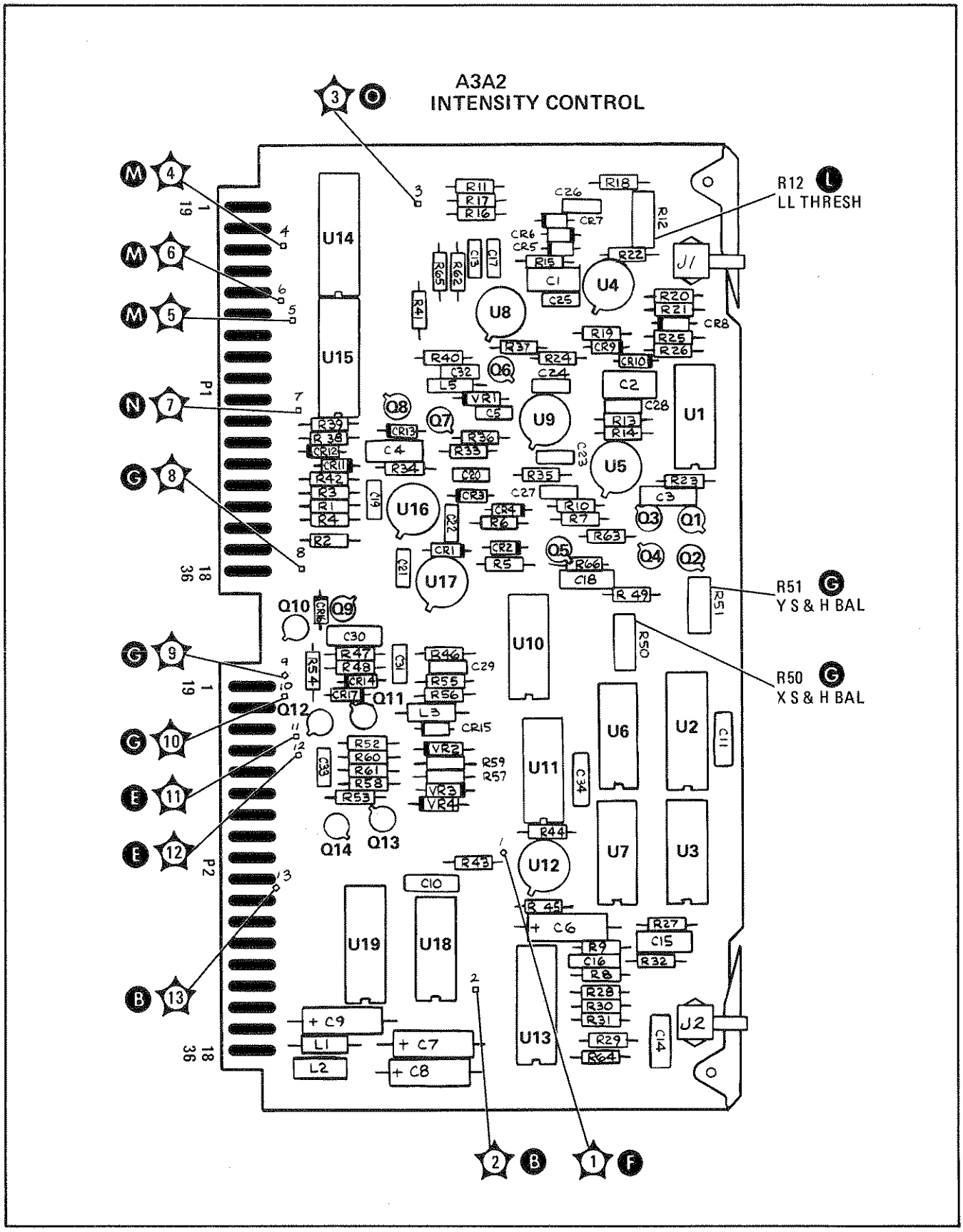

FIGURE 4. A3A2 INTENSITY CONTROL, COMPONENT LOCATIONS

A3A2 INTENSITY CONTROL
85662-60025 (SHEET 1 OF 2)

N	SIGNAL	TO/FROM	FUNCTION BLOCK
	FSZ	A3A1P1-1	M
	GND		O
	GND		O
	GND		O
	Z	A3A10W2-8	M
	GND		O
	Y	A3A10J3-Y	M
	GND		O
	X	A3A10J3-X	M
	GND		N
	GND		O
	LGY	A3A3P1-6	M
	AUXZ	A3A10W3-9	N
	GND		O
	NC		
	GND		O
	NC		
	GND		O
	GND		O
	GND		O
	VIDEO	A3A1P2-28	M
	LLL	A3A3P1-30	C
	VGND		O
	GND		O
	VGND		O
	GND		O
	F.S. OUT	A3A1P2-30	M
	GND		O
	GND		O
	ΔY	A3A3P1-16	J
	GND		O
	GND		O
	LRSTO	A3A6P1-18	H
	ΔX	A3A3P1-18	J

P2

PIN	SIGNAL	TO/FROM	FUNCTION BLOCK
1	HLDY	A3A3P1-32	G
19	LGCLK	A3A7P2-8	B
2	HLDX	A3A3P1-33	G
20	DOTEN	A3A6P1-24	FG
3	SMPL	A3A3P1-34	G
21	NC		
4	LINTG	A3A3P1-35	E
22	BRIGHT	A3A6AP1-1	C
5	INTG	A3A3P1-36	E
23	FS	A3A6P1-19	C
6	NC		
24	LLGBLANK	A3A6P1-2	C
7	LFSEN	A3A1P2-31	I
25	BLINK	A3A6P1-20	C
8	AUX BLANK	A2A10W2-13	M
26	DIM	A3A6P1-3	C
9	LBLANK	A3A10W2-11	F
27	LRTRC	A3A1P1-26	F
10	NC		
28	INTR	A3A6P1-24	B
11	B2		I
29	NC		
12	LTSTB	A3A7P1-4	I
30	B5		I
13	B6	A3A7P1-13	I
31	B7		I
14	HSWP	A3A1P1-21	I
32	B9		I
15	STROK8	A3A4P1-3	I
33	B11		I
16	DGND		O
34	DGND		O
17	+5V		O
35	AGND		O
18	+15V		O
36	-15V		O

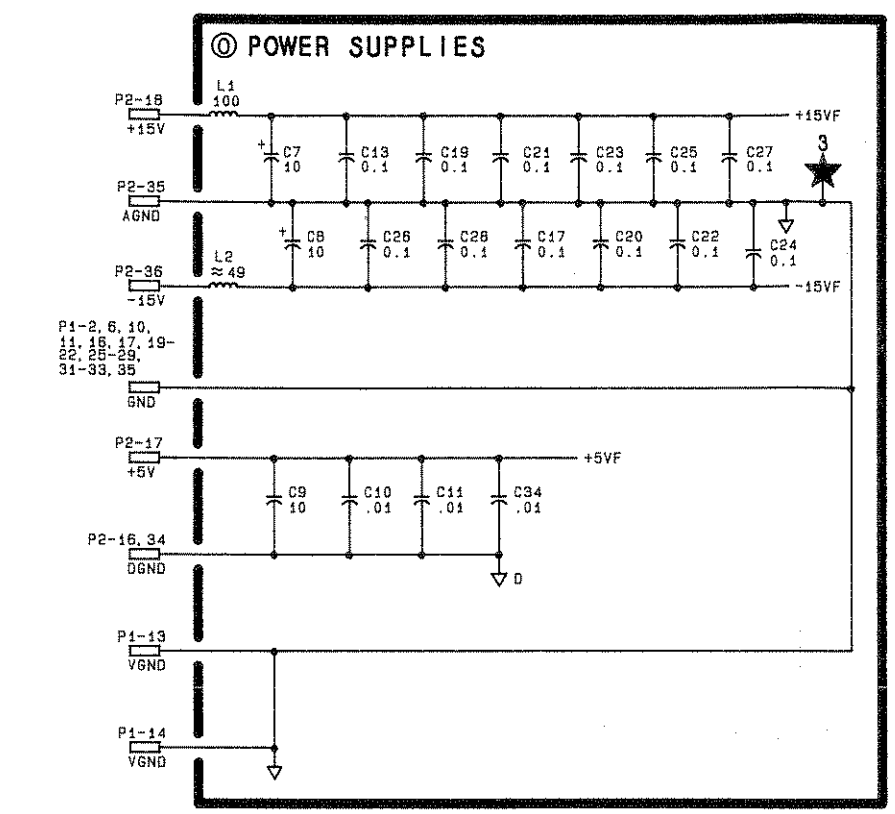

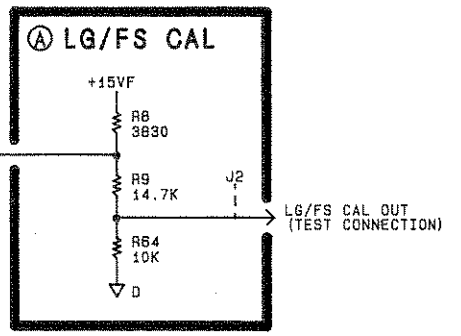

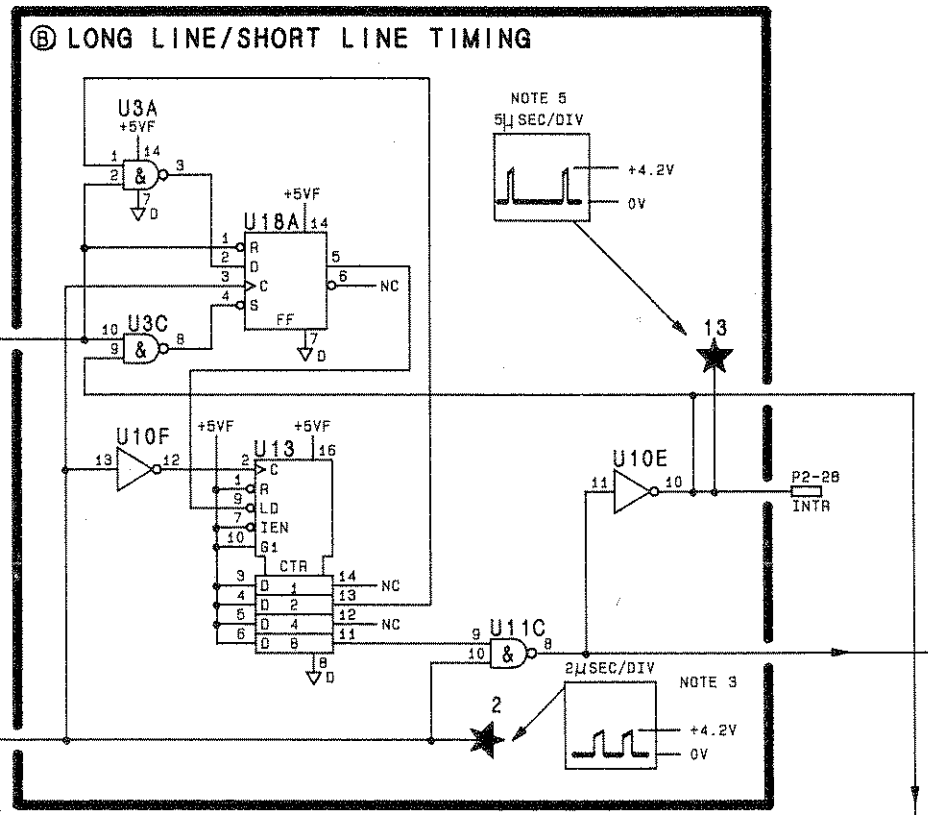

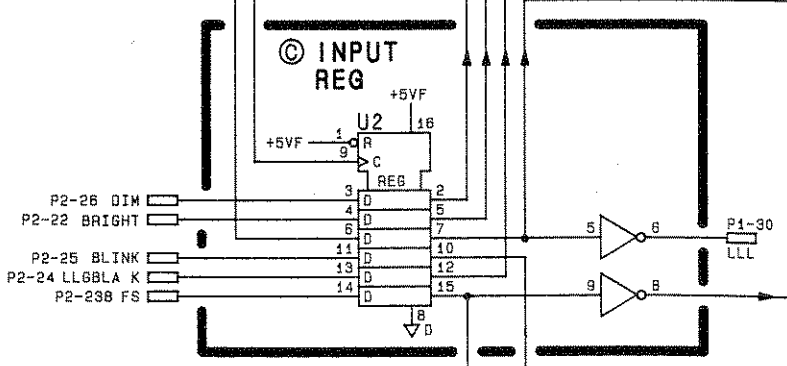

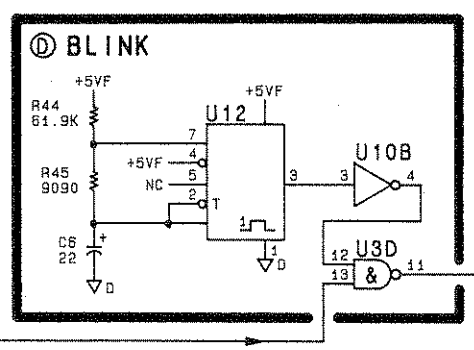

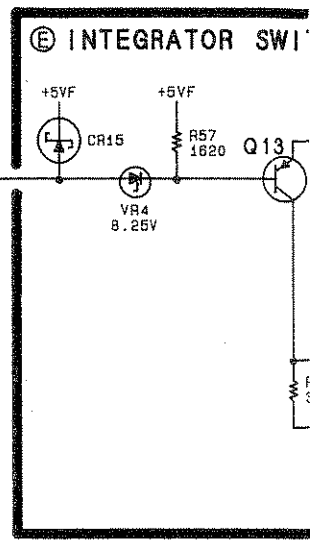

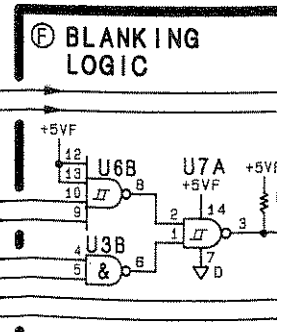

RIAL PREFIX: 2403A

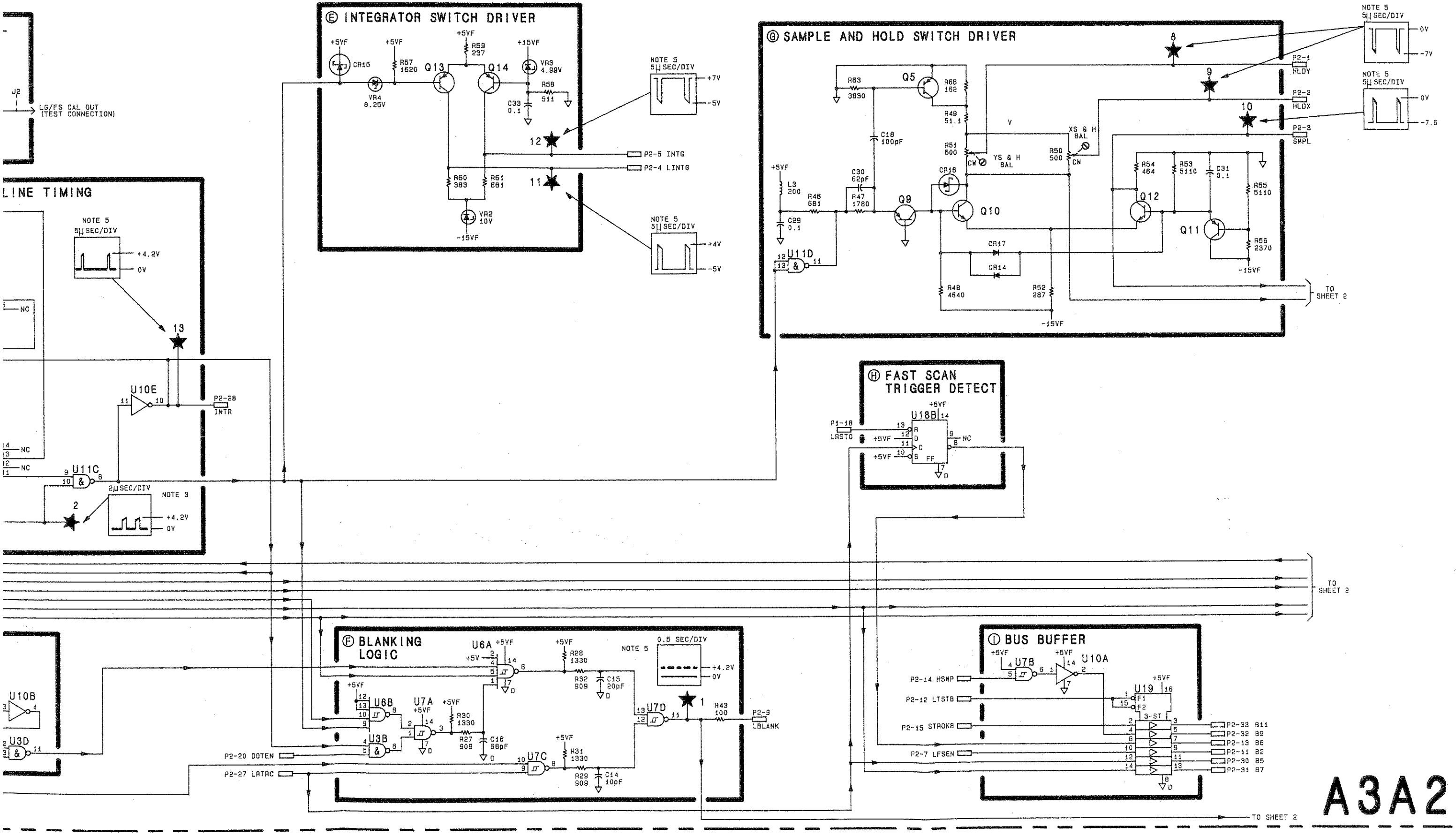

FIGURE 5. A3A2 INTENSITY CONTROL, SCHEMATIC DIAGRAM (1 OF 2)

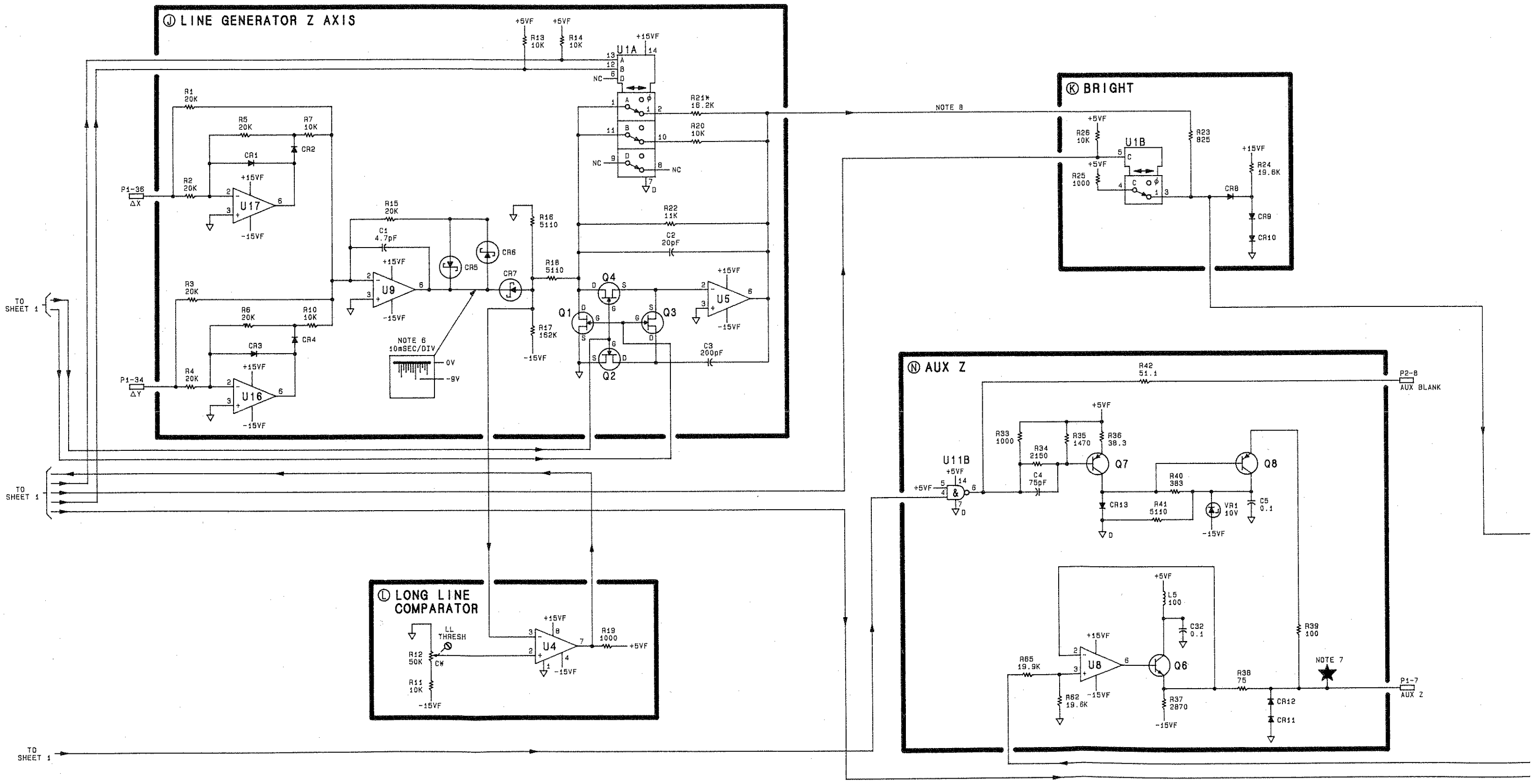

SERIAL PREFIX: 2403A

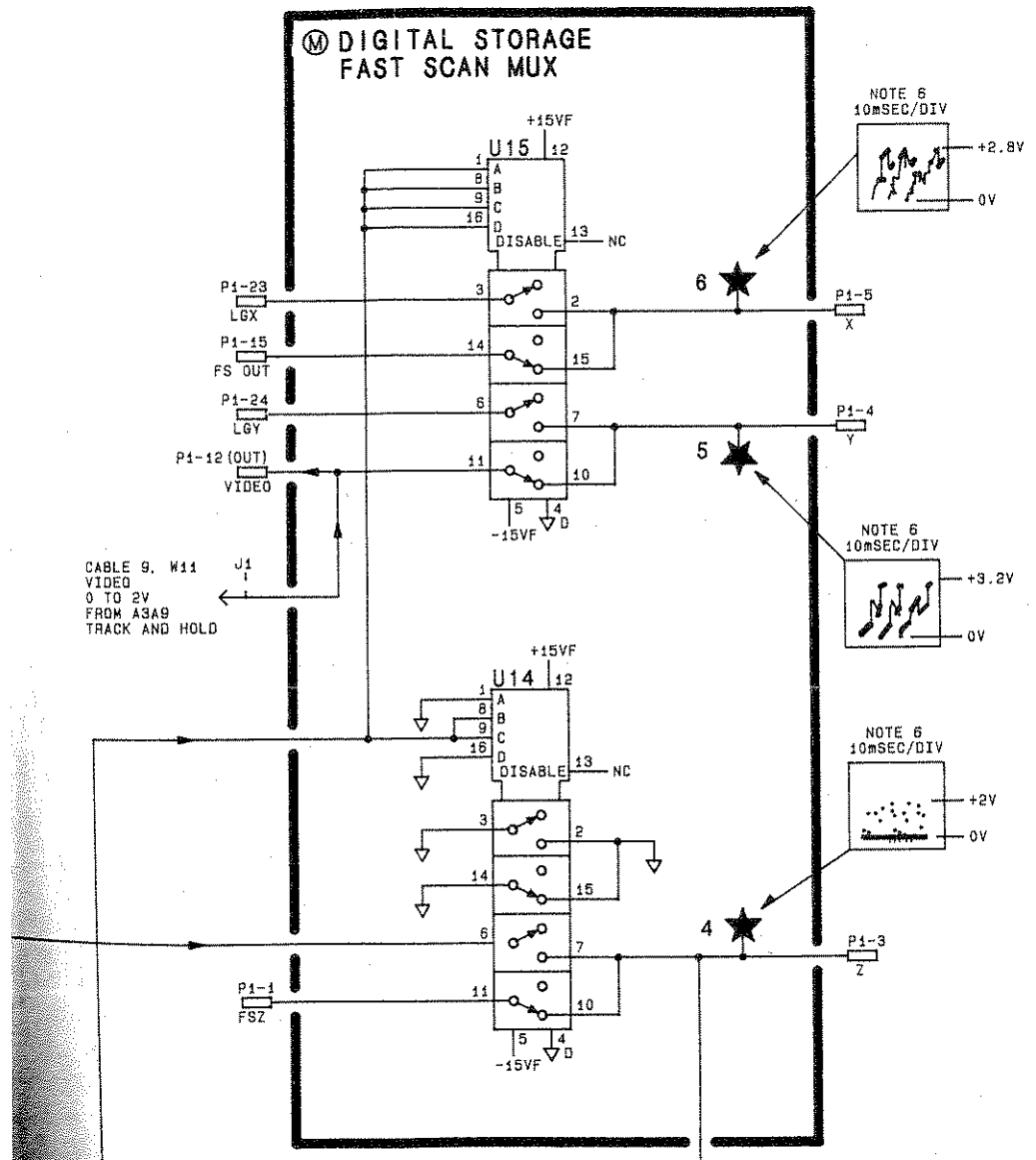

NOTES:

1. REFERENCE DESIGNATORS WITHIN THIS ASSEMBLY ARE ABBREVIATED. FOR COMPLETE REFERENCE DESIGNATION, PREFIX ABBREVIATION WITH ASSEMBLY DESIGNATION.

2. UNLESS OTHERWISE INDICATED:
   RESISTANCE IS IN OHMS (Ω)
   CAPACITANCE IS IN MICROFARADS (μF)
   INDUCTANCE IS IN MICROHENRIES (μH)

3. UNLESS OTHERWISE INDICATED:
   LOGIC LEVELS ARE TTL:
   +2.0V TO +5.0V=LOGIC "1" HIGH
   0V TO +0.8V=LOGIC "0" LOW

4. MNEMONIC TABLE:

MNEMONIC	DESCRIPTION
FSZ	FAST SWEEP Z
LGX	LINE GENERATOR X
LGY	LINE GENERTOR Y
LLL	LOW=LONG LINE
HLDY	HOLD Y
LGCLK	LINE GENERATOR CLOCK
HLDX	HOLD X
DOTEN	DOT ENABLE
LSMPL	SAMPLE
LINTS	NOT INTEGRATE
INTG	INTEGRATE
FS	FAST SCAN
LLGBLANK	LOW=LINE GENERATOR BLANK
LFSEN	LOW=FAST SCAN ENABLE
INTR	INTERRUPT
HSWP	HIGH=SWEEP
LASTO	LOW=RESET TRIGGER OCCURED
STROKB	EIGHT CHARACTER STROKE
BRIGHT	BRIGHT LINE
DIM	DIM LINE
LL	LONG LINE
LRTRC	LOW=RETRACE
BLINK	BLINK LINE
ΔX	DELTA X
ΔY	DELTA Y
LBLANK	LOW=BLANK
LTSTB	LOW=TEST B
XS & HBAL	X SAMPLE AND HOLD BALANCE
YS & HBAL	Y SAMPLE AND HOLD BALANCE
LLTHRESH	LONG LINE THRESHOLD

5. TEST CONDITIONS FOR WAVEFORMS ARE:
   ROTATE A3A2 R12 TO FULL CW POSITION
   SHORT A3A6TP3 TO A3A6TP6
   SHORT A3A7TP3 TO A3A7TP6
   PRESS A3A7S1

6. USE TEST CONDITIONS FROM NOTE 5 AND EXTERNAL TRIGGER FROM P2-23.

7. USING TEST CONDITIONS FROM NOTE 5 AND EXTERNAL TRIGGER FROM P2-23, A WAVEFORM SIMILIAR TO TP4 WILL RESULT. MAXIMUM POSITIVE AMPLITUDE IS +1V. A -1.3V BLANKING SIGNAL IS ALSO PRESENT.

8. USING TEST CONDITIONS FROM NOTE 5 AND EXTERNAL TRIGGER FROM P2-23, A WAVEFORM SIMILIAR TO TP4 WILL RESULT. MAXIUM POSITIVE AMPLITUDE IS +8V.

9. **UNLESS OTHERWISE INDICATED: SIGNALS ENTER AT LEFT SIDE OR TOP AND EXIT AT RIGHT SIDE OR BOTTOM OF FUNCTION BLOCKS.**

A3A2

FIGURE 5. A3A2 INTENSITY CONTROL, SCHEMATIC DIAGRAM (2 OF 2)

A3A3 LINE GENERATOR, CIRCUIT DESCRIPTION

A3A3 Line Generator receives a series of digital X and Y display positions, converts them to analog values, and connects them with straight lines. This process, called line generation, is similar to that of dot-to-dot drawing on paper (see Figure 1). Two independent line generators are required: one for the X series of values and one for the Y series. For each line there is a setup period followed by a drawing period. During the setup period the display is blanked by A3A2 Intensity Control.

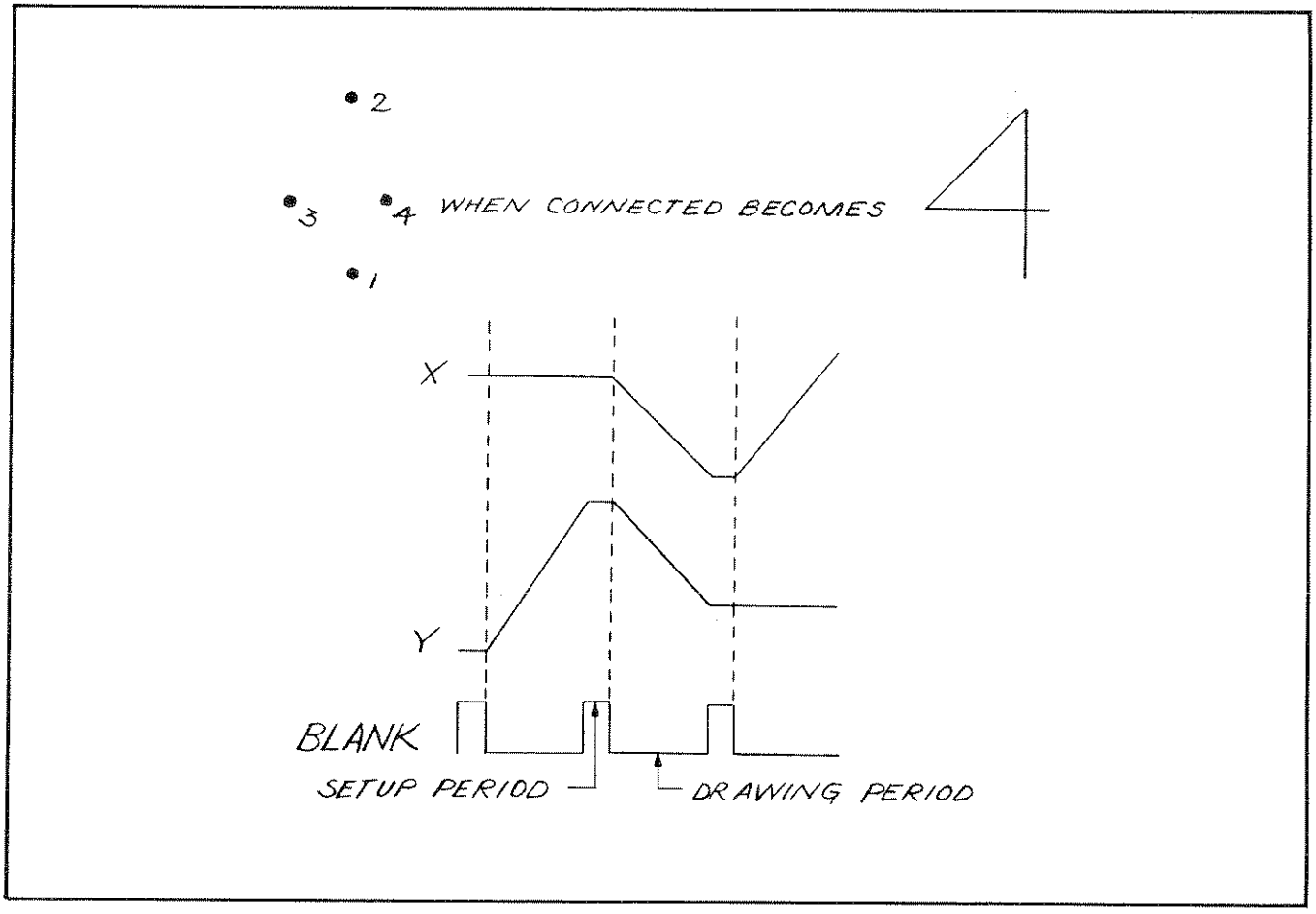

FIGURE 1. LINE GENERATION PROCESS

Each of the line generators consists of a register, a digital-to-analog converter (DAC), a summing amplifier, a sample and hold circuit, an integrator, and a filter. The X or Y register receives the next display point from the Digital Storage Bus. The DAC converts this number to a current. The summing amplifier then computes a position change ΔX equal to "next X" minus "present X." During the setup time for the next line, ΔX and ΔY are sampled by the Sample and Hold circuit. At the end of the setup time and during the drawing time, ΔX and ΔY are held for constant input to the Integrator. During the drawing time, the Integrator output changes linearly from X to $X + \Delta X$ and from Y to $Y + \Delta Y$. This is done by integrating ΔX and ΔY at a constant rate such that the output becomes $X + \Delta X$ and $Y + \Delta Y$; that is, "new X" and "new Y."

X Register (A)

U5 and U6 form a 10-bit X Position Register. When a new X position is present on lines BØ-B9 of the Digital Storage Bus, the CHAR line is held low and a positive-going edge on LDX causes U5 and U6 to be loaded with the value of BØ-B9. These 10 bits then become the X position input to the X DAC. Characters are drawn by changing only bits 1, 2, and 3 of the X Position Register and bits 1 – 4 of the Y Position Register. Strokes of a character are described by a series of X and Y values sent to the Line Generator on the Digital Storage Bus. B4-B6 of the Digital Storage Bus carry the series of X values. When the next X value is present on B4-B6, the CHAR line is held high and a positive-going edge on LDCHAR causes U5 to be loaded with the new values for bits 1 – 3 of the X position.

X DAC (D)

The output of U5 and U6 are the X position input to U4, the X DAC. U4 is a 10-bit multiplying DAC whose output current depends on the digital input code and the voltage at VREF (pin 15). This output current is the analog X position sent to the X Summing Amplifier. The inputs of U4 are clamped to a maximum of +3.6V by diodes CR1 through CR10.

X Summing Amplifier (G)

The X Summing Amplifier receives the next X position from the X DAC, the present X position from the X Integrator, and an X position shift from the Expand Register. The three signals are summed to give ΔX = "next X" + "X shift" – "present X." "X shift " is a binary signal of 0V or +5V, and the amount of shift is adjusted by X EXP potentiometer R1 (X and Y shift are used to move the display origin from the graticule lower left to the screen lower left). X GAIN potentiometer R4, the X line generator gain adjustment, varies the magnitude of the X line generator output. R4 also has an effect on the accuracy of line positions. XLL potentiometer R6, the X long line adjust, is used to adjust line position accuracy (see Integrator description).

X Sample and Hold (J)

The ΔX value from the Summing Amplifier is held for constant input to the Integrator by the X Sample and Hold circuit. Sampling occurs during the setup period, which lasts 1 μsec. Holding occurs during the drawing period, which lasts 4 μsec or 19 μsec. Q2 and Q3 are on during the sample mode and are driven by the SMPL line. Q1 and Q4 are on during the hold mode and are driven by the HLDX line (see Figure 2). Q6 is a dual FET used to provide a high-impedance input to U2. Capacitor C23 is the holding capacitor.

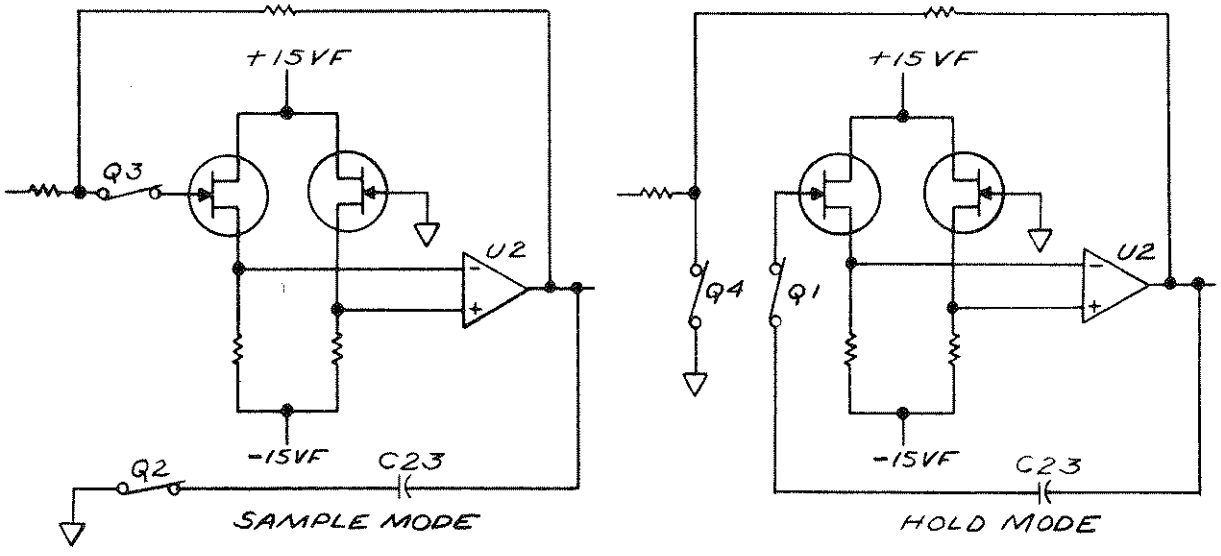

FIGURE 2. SAMPLE AND HOLD MODES, SIMPLIFIED SCHEMATIC

X Integrator (L)

U1, C26, and Q5 form an "integrate and hold" circuit whose output is the X display position. During the setup period, Q5 is open, leaving only U1 and C26 holding the present value of X. During the drawing period, Q5 is closed and the constant ΔX value from the Sample and Hold circuit causes a constant current (proportional to ΔX) to flow through C26. This constant current through C26 causes the output of U1 to change linearly from the value (X_i) at the last setup period toward a new value $X_{i+1} = X_i + \Delta X$. When the drawing period ends, Q5 opens and the circuit returns to the hold mode, this time with output at the new X position, X_i. The process of current flow through C26 is equivalent to integrating ΔX over the drawing period.

The drawing period may last for 4 μsec (short line) or 19 μsec (long line). The hold period lasts for 1 μsec. When the Line Generator is drawing a long line (19 μsec), switch Q8 is open and the current through C26 is determined by R15. When the Line Generator is drawing a short line (4 μsec), switch Q8 is closed and the current through C26 is determined by R15 in parallel with R7, R18. In either case, the current must be precisely set so that the X position will become $X_{i+1} = X_i + \Delta X$ at the end of the drawing period. In the long line mode, XLL potentiometer R6 of the Summing Amplifier is adjusted to get accurate line positioning. For accuracy in the short line mode, XSL potentiometer R18 must be properly adjusted.

Diodes CR22 and CR23 keep the source of Q5 within 0.7V of ground during the hold mode. Capacitors C43 and C27 and signal LINTG compensate for gate feedthrough on Q5. R16, C29, and C28 provide frequency compensation for U1.

X Filter (O)

The X Filter is a 2.5-MHz low-pass filter which smooths out transients from the X Integrator.

Y Register (C)

U9 and U10 form a 10-bit Y Register. When a new Y position is present on BØ-B9 of the Digital Storage Bus, the CHAR line is held low and a positive-going edge on LDY causes U9 and U10 to be loaded with the value of BØ-B9. These 10 bits then become the Y position input to the Y DAC. When characters are being drawn, bits 1 – 4 of the Y Register are changed. BØ-B3 of the Digital Storage Bus carry the series of Y values representing the Y components of the character strokes. When the next Y value is present on BØ-B3, the CHAR line is held high and a positive-going edge on LDCHAR causes U9 to be loaded with the new values for bits 1 through 4 of the Y position.

Y DAC, Y Summing Amplifier, Y Sample and Hold, Y Integrator, and Y Filter (F) (I) (K) (N) (P)

The Y DAC, Y Summing Amplifier, Y Sample and Hold, Y Integrator, and Y Filter operate in a manner identical to that of the corresponding X Line Generator circuits.

Expand Register (B)

U14 is a 2-bit Expand Register which provides scale and origin-shift information to the X and Y Line Generators. When a new expand value is present on B6 and B8 of the Digital Storage Bus, a positive-going edge on LDEXP causes U14 to be loaded with the value of B6 and B8. A high on B6 will cause a scale increase of 13 percent over normal (the graticule is drawn at normal scale) and an origin shift of 13.6 percent of normal scale. A high on B8 will cause a scale increase of 55 percent over normal with no origin shift. A high on both B6 and B8 will cause a scale increase of 68 percent over normal and an origin shift of 13.6 percent of normal scale. Q16 and Q17 provide buffering from the TTL signals to the analog circuits.

Reference (E)

U13 provides the reference voltage to the X and Y DACs. The magnitude of the reference voltage is proportional to the scale of the Line Generator output. For normal scale the reference voltage is nominally −5.12V. For the three expanded scales, the reference may be −5.8V, −7.9V, or −8.6V.

Y Offset (H)

The Y Offset circuit supplies a signal to the Y Summing Amplifier such that the output of the Y Line Generator will be 0V when the Y Register contains all zeroes and no origin shift is present. YOS potentiometer R43 is used to make the adjustment.

Long Line Switch Driver (M)

The long Line Switch Driver provides level translation from the TTL signal LLL to the gate signals for Q7 and Q8. A high on LLL turns on Q7 and Q8.

Line Generator Timing

Figure 3 shows the timing relationship between the X and Y Line Generator outputs and the drive signals. Changes in the X Register, Y Register, and Expand Register occur only during the drawing period; that is, when the Sample and Hold circuit is holding. Changes in the LLL signal occur only during the setup period; that is, when the Integrator is holding. The length of the drawing period (either 4 or 19 μsec) is determined by A3A2 Intensity Control.

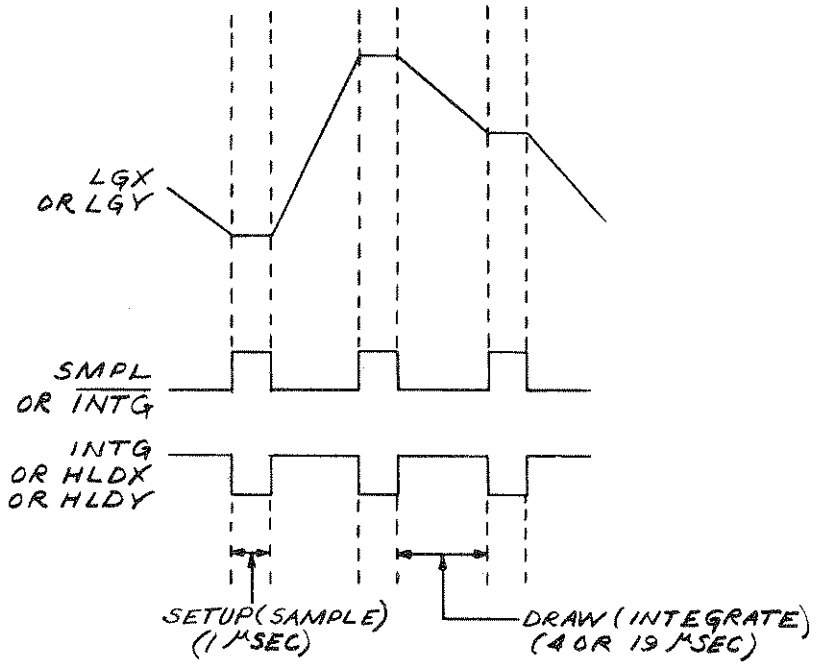

FIGURE 3. LINE GENERATOR TIMING

A3A3 LINE GENERATOR, TROUBLESHOOTING

The A3A3 Line Generator Assembly converts the digital X and Y display positions from the Digital Storage processor to analog values and draws lines between them. It positions the characters with respect to the graticule and sets the size of the display and graticule.

A distorted CRT display involving both the horizontal and the vertical components is often caused by malfunctions on this assembly. If only the video information is distorted, suspect the A3A8 Analog Digital Converter. Drawing of the characters is controlled by the Character Stroke Memory on the A3A4 Memory Assembly.

If both the X and Y channels are distorted, suspect the Expand Register **(B)**, Reference **(E)**, Long Line Switch Driver **(M)** and/or the INTG or SMPL control signals, as these are common to both channels.

If the positive amplitude at A3A3TP11 is only +2V, the gate of either Q5 or Q10 has been damaged.

The Long Line switches Q7 and Q8 can be tested as follows. Set A3A2R12 in the LL position (full CW). A3A3TP6 is then a TTL low and the gates of Q7 and Q8 are approximately −15V. With A3A2R12 in the fully CCW position, A3A3TP6 is a TTL high and the gates of Q7 and Q8 are approximately −1V.

If it is determined that any of the Sample and Hold FETs Q1−Q4 or Q12−Q15 are defective, the best procedure is to replace all four since it is not easy to determine which FET is defective.

The Digital Storage Test Programs can be used to troubleshoot the analog functions on A3A3. When using these programs, the LL/SL pot A3A2R12 should be set to the full CW position (LL). The SL (full CCW) position should also be examined as it exercises the circuitry at the highest speeds.

Digital Storage Test Program 5 and the CRT display are used to verify the input Registers and the DACs. It is not necessary to remove A3A1 when testing A3A3. The display in Figure 4 is the result of a Y DAC or Y Register malfunction. Notice that the malfunction causes vertical jumps in the test waveform. A defective component in the X channel would cause horizontal jumps. The Signature Analyzer is necessary to determine the defective component.

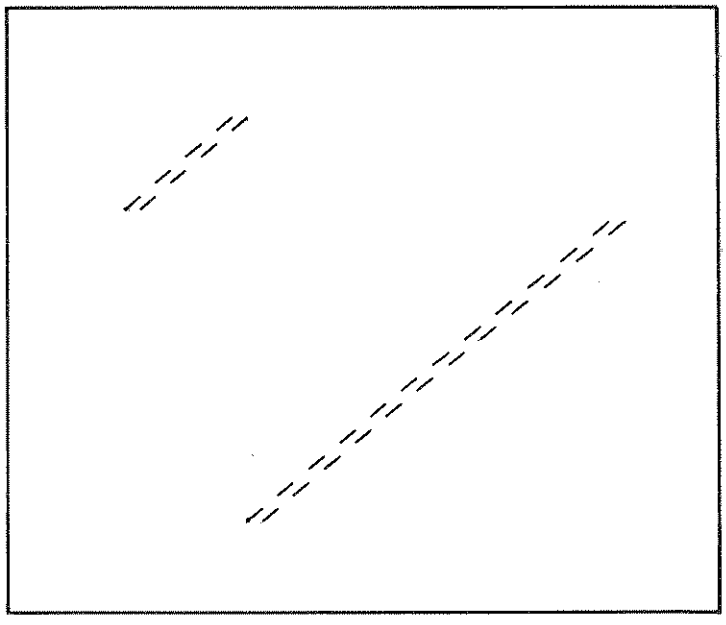

FIGURE 4. DIGITAL STORAGE TEST PROGRAM #5 DISPLAY WITH DEFECTIVE Y CHANNEL

The Expand Register **(B)** and Reference **(E)** set the V_{REF} levels for the X and Y DACs. This provides both magnification and origin shift for the display. As shown in Table 1, four voltage levels are generated. These levels are present when Digital Storage Test Program 3 is used (again it is not necessary to remove A3A1). The reference voltage is measured at A3A3TP8. With A3A2R12 in the LL position and the oscilloscope sweep time set to 2 msec/div, the waveform shown in Figure 5 will result. In the SL position the waveform is identical for a sweep time of 1 msec/div.

TABLE 1. REFERENCE VOLTAGE TRUTH TABLE

	Reference Voltage			
	−5.1V	−5.8V	−7.9V	−8.6V
U14 pin 3 U14 pin 11	H H	L H	H L	L L

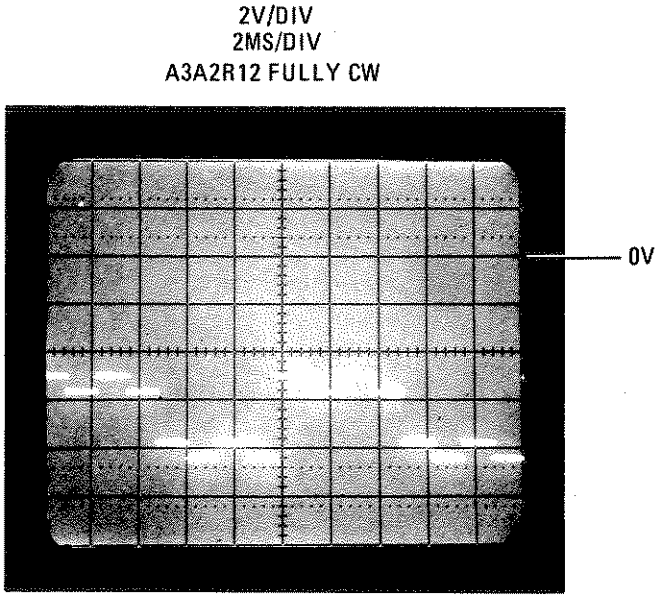

FIGURE 5. REFERENCE VOLTAGES

The following program is useful in troubleshooting problems related to the dynamic operation of the Summing Amplifiers, Sample and Hold, and Integrators. It draws a line from the lower left corner of the display to the upper right corner and then back to the lower left.

Key in the following:

Instrument Preset	Comments
[BLANK] TRACE A	
[BLANK] TRACE B	
[SHIFT] Recorder Upper Right	WRITE:
1056 Hz	Skip Page
[SHIFT] Recorder Lower Left	DSPL ADRS
0 Hz	
[SHIFT] Recorder Upper Right	WRITE:
1026 Hz	Vector Command
0 Hz 0 Hz	X, Y pair 1
1023 Hz 1023 Hz	X, Y pair 2
0 Hz 0 Hz	X, Y pair 3
1056 Hz	Skip Page
[SHIFT] Recorder Lower Left	DSPL ADRS
2048 Hz	
[SHIFT] Recorder Upper Right	WRITE
1056 Hz	Skip Page

The waveforms in Figure 6 show the X and Y channel outputs for this program.

The +5V pulse at A3A3TP12 is the "next X" data from the X DAC. In this program the "X shift" value from the Expand Register is 0V. The "present X" value is the waveform of A3A3TP10. The output at A3A3TP12 is ΔX = "next X" + "X shift" − "present X." The small spikes every 5 μsec indicate the beginning and end of the 1 μsec sampling period. A3A3TP4 shows the output of the Sample and Hold circuitry. Note that the output is inverted relative to the output of the summing amplifier.

A3A3TP10 shows the result of integrating ΔX over the drawing period. See the A3A3 Line Generator Circuit Description for a more complete description of the operation of the Integrator circuit.

Oscilloscope Settings:
Sweeptime: 10 μs/div
Ext. trigger: TP10
Vertical:
Upper trace: 2V/div
Lower trace: 1V/div
Analyzer Settings:
A3A2R12: Fully CCW

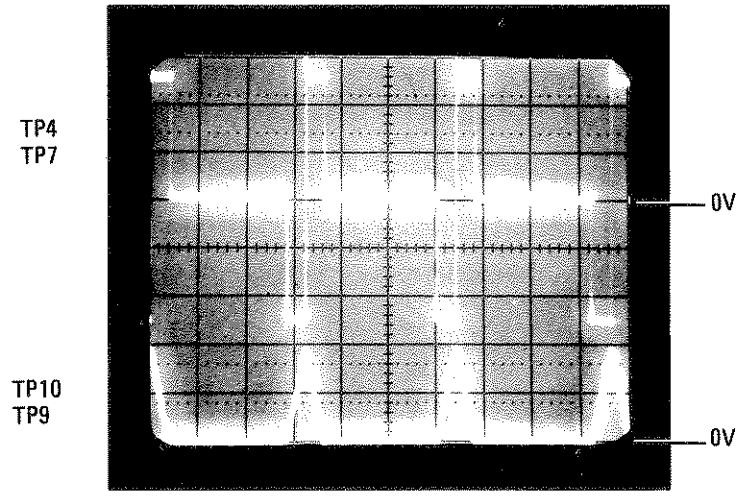

a. Sample and Hold Output

Oscilloscope Settings:
Sweeptime: 10μs/div
Ext. trigger: TP10
Vertical:
Upper trace: 2V/div
Lower trace: 1V/div
Analyzer Settings:
A3A2R12: Fully CCW

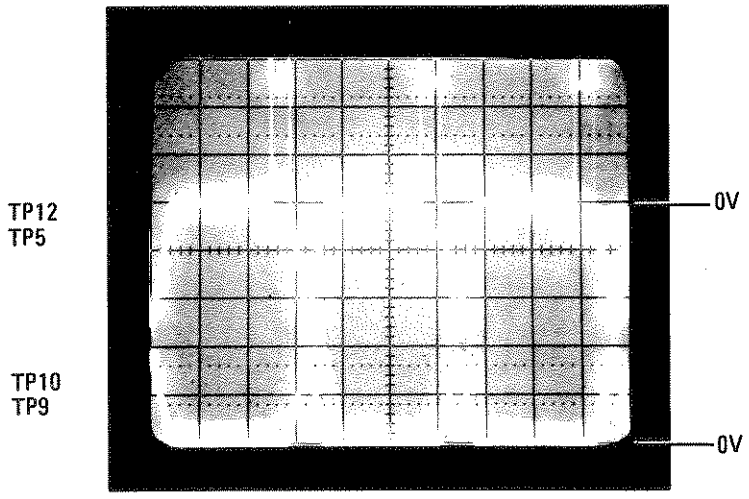

b. Summing Amplifier Output

FIGURE 6. LINE GENERATOR X AND Y CHANNEL OUTPUTS

TABLE 2. A3A3, REPLACEABLE PARTS (1 OF 3)

Reference Designation	HP Part Number	C D	Qty	Description	Mfr Code	Mfr Part Number
A3A3	85662-60128	3	1	BOARD ASSEMBLY, LINE GENERATOR	28480	85662-60128
A3A3C1	0180-0374	3	3	CAPACITOR-FXD 10UF+-10% 20VDC TA	56289	150D106X9020B2
A3A3C2	0180-0374	3		CAPACITOR-FXD 10UF+-10% 20VDC TA	56289	150D106X9020B2
A3A3C3	0180-0374	3		CAPACITOR-FXD 10UF+-10% 20VDC TA	56289	150D106X9020B2
A3A3C4	0160-2257	3	2	CAPACITOR-FXD 10PF +-5% 500VDC CER 0+-60	28480	0160-2257
A3A3C5	0160-2257	3		CAPACITOR-FXD 10PF +-5% 500VDC CER 0+-60	28480	0160-2257
A3A3C6	0160-4084	8	17	CAPACITOR-FXD .1UF +-20% 50VDC CER	28480	0160-4084
A3A3C7	0160-4084	8		CAPACITOR-FXD .1UF +-20% 50VDC CER	28480	0160-4084
A3A3C8	0160-4084	8		CAPACITOR-FXD .1UF +-20% 50VDC CER	28480	0160-4084
A3A3C9	0160-4084	8		CAPACITOR-FXD .1UF +-20% 50VDC CER	28480	0160-4084
A3A3C10	0160-4084	8		CAPACITOR-FXD .1UF +-20% 50VDC CER	28480	0160-4084
A3A3C11	0160-4084	8		CAPACITOR-FXD .1UF +-20% 50VDC CER	28480	0160-4084
A3A3C12	0160-4084	8		CAPACITOR-FXD .1UF +-20% 50VDC CER	28480	0160-4084
A3A3C13	0160-4084	8		CAPACITOR-FXD .1UF +-20% 50VDC CER	28480	0160-4084
A3A3C14	0160-4084	8		CAPACITOR-FXD .1UF +-20% 50VDC CER	28480	0160-4084
A3A3C15	0160-4084	8		CAPACITOR-FXD .1UF +-20% 50VDC CER	28480	0160-4084
A3A3C16	0160-4084	8		CAPACITOR-FXD .1UF +-20% 50VDC CER	28480	0160-4084
A3A3C17	0160-4084	8		CAPACITOR-FXD .1UF +-20% 50VDC CER	28480	0160-4084
A3A3C18	0160-4084	8		CAPACITOR-FXD .1UF +-20% 50VDC CER	28480	0160-4084
A3A3C19	0160-4084	8		CAPACITOR-FXD .1UF +-20% 50VDC CER	28480	0160-4084
A3A3C20	0160-4084	8		CAPACITOR-FXD .1UF +-20% 50VDC CER	28480	0160-4084
A3A3C21	0160-2250	6	5	CAPACITOR-FXD 5.1PF +-.25PF 500VDC CER	28480	0160-2250
A3A3C22	0160-2250	6		CAPACITOR-FXD 5.1PF +-.25PF 500VDC CER	28480	0160-2250
A3A3C23	0160-3067	5	2	CAPACITOR-FXD 200PF +-5% 300VDC MICA	28480	0160-3067
A3A3C24	0160-2250	6		CAPACITOR-FXD 5.1PF +-.25PF 500VDC CER	28480	0160-2250
A3A3C25	0160-3067	5		CAPACITOR-FXD 200PF +-5% 300VDC MICA	28480	0160-3067
A3A3C26	0160-2675	9	2	CAPACITOR-FXD 3900PF +-1% 300VDC MICA	28480	0160-2675
A3A3C27				NOT ASSIGNED		
A3A3C28	0160-2250	6		CAPACITOR-FXD 5.1PF +-.25PF 500VDC CER	28480	0160-2250
A3A3C29	0160-3995	8	2	CAPACITOR-FXD 3900PF +-10% 250VDC CER	28480	0160-3995
A3A3C30	0160-3995	8		CAPACITOR-FXD 3900PF +-10% 250VDC CER	28480	0160-3995
A3A3C31	0160-2675	9		CAPACITOR-FXD 3900PF +-1% 300VDC MICA	28480	0160-2675
A3A3C32				NOT ASSIGNED		
A3A3C33	0160-2250	6		CAPACITOR-FXD 5.1PF +-.25PF 500VDC CER	28480	0160-2250
A3A3C34	0140-0191	8	2	CAPACITOR-FXD 56PF +-5% 300VDC MICA	72136	DM15E560J0300WV1CR
A3A3C35	0140-0199	6	2	CAPACITOR-FXD 240PF +-5% 300VDC MICA	72136	DM15F241J0300WV1CR
A3A3C36	0160-3536	3	2	CAPACITOR-FXD 620PF +-5% 100VDC MICA	28480	0160-3536
A3A3C37	0140-0191	8		CAPACITOR-FXD 56PF +-5% 300VDC MICA	72136	DM15E560J0300WV1CR
A3A3C38	0140-0199	6		CAPACITOR-FXD 240PF +-5% 300VDC MICA	72136	DM15F241J0300WV1CR
A3A3C39	0160-3536	3		CAPACITOR-FXD 620PF +-5% 100VDC MICA	28480	0160-3536
A3A3C40	0160-2055	9	3	CAPACITOR-FXD .01UF +80-20% 100VDC CER	28480	0160-2055
A3A3C41	0160-2055	9		CAPACITOR-FXD .01UF +80-20% 100VDC CER	28480	0160-2055
A3A3C42	0160-2055	9		CAPACITOR-FXD .01UF +80-20% 100VDC CER	28480	0160-2055
A3A3C43	0160-2241	5	2	CAPACITOR-FXD 2.2PF +-.25PF 500VDC CER	28480	0160-2241
A3A3C44	0160-2241	5		CAPACITOR-FXD 2.2PF +-.25PF 500VDC CER	28480	0160-2241
A3A3C45				NOT ASSIGNED		
A3A3C46	0160-2264	2	2	CAPACITOR-FXD 20PF +-5% 500VDC CER 0+-30	28480	0160-2264
A3A3C47	0160-2264	2		CAPACITOR-FXD 20PF +-5% 500VDC CER 0+-30	28480	0160-2264
A3A3C48	0160-4084	8		CAPACITOR-FXD .1UF +-20% 50VDC CER	28480	0160-4084
A3A3C49	0160-4084	8		CAPACITOR-FXD .1UF +-20% 50VDC CER	28480	0160-4084
A3A3CR1	1901-0535	9	23	DIODE-SM SIG SCHOTTKY	28480	1901-0535
A3A3CR2	1901-0535	9		DIODE-SM SIG SCHOTTKY	28480	1901-0535
A3A3CR3	1901-0535	9		DIODE-SM SIG SCHOTTKY	28480	1901-0535
A3A3CR4	1901-0535	9		DIODE-SM SIG SCHOTTKY	28480	1901-0535
A3A3CR5	1901-0535	9		DIODE-SM SIG SCHOTTKY	28480	1901-0535
A3A3CR6	1901-0535	9		DIODE-SM SIG SCHOTTKY	28480	1901-0535
A3A3CR7	1901-0535	9		DIODE-SM SIG SCHOTTKY	28480	1901-0535
A3A3CR8	1901-0535	9		DIODE-SM SIG SCHOTTKY	28480	1901-0535
A3A3CR9	1901-0535	9		DIODE-SM SIG SCHOTTKY	28480	1901-0535
A3A3CR10	1901-0535	9		DIODE-SM SIG SCHOTTKY	28480	1901-0535
A3A3CR11	1901-0535	9		DIODE-SM SIG SCHOTTKY	28480	1901-0535
A3A3CR12	1901-0535	9		DIODE-SM SIG SCHOTTKY	28480	1901-0535
A3A3CR13	1901-0535	9		DIODE-SM SIG SCHOTTKY	28480	1901-0535
A3A3CR14	1901-0535	9		DIODE-SM SIG SCHOTTKY	28480	1901-0535
A3A3CR15	1901-0535	9		DIODE-SM SIG SCHOTTKY	28480	1901-0535
A3A3CR16	1901-0535	9		DIODE-SM SIG SCHOTTKY	28480	1901-0535
A3A3CR17	1901-0535	9		DIODE-SM SIG SCHOTTKY	28480	1901-0535
A3A3CR18	1901-0535	9		DIODE-SM SIG SCHOTTKY	28480	1901-0535
A3A3CR19	1901-0535	9		DIODE-SM SIG SCHOTTKY	28480	1901-0535
A3A3CR20	1901-0535	9		DIODE-SM SIG SCHOTTKY	28480	1901-0535
A3A3CR21	1901-0040	1	5	DIODE-SWITCHING 30V 50MA 2NS DO-35	28480	1901-0040
A3A3CR22	1901-0040	1		DIODE-SWITCHING 30V 50MA 2NS DO-35	28480	1901-0040
A3A3CR23	1901-0040	1		DIODE-SWITCHING 30V 50MA 2NS DO-35	28480	1901-0040
A3A3CR24	1901-0040	1		DIODE-SWITCHING 30V 50MA 2NS DO-35	28480	1901-0040
A3A3CR25	1901-0535	9		DIODE-SM SIG SCHOTTKY	28480	1901-0535

TABLE 2. A3A3, REPLACEABLE PARTS (2 OF 3)

Reference Designation	HP Part Number	C D	Qty	Description	Mfr Code	Mfr Part Number
A3A3CR26	1901-0040	1		DIODE-SWITCHING 30V 50MA 2NS DO-35	28480	1901-0040
A3A3CR27	1901-0535	9		DIODE-SM SIG SCHOTTKY	28480	1901-0535
A3A3CR28	1901-0535	9		DIODE-SM SIG SCHOTTKY	28480	1901-0535
A3A3L1	9140-0210	1	2	INDUCTOR RF-CH-MLD 100UH 5% .166DX.385LG	28480	9140-0210
A3A3L2	9140-0210	1		INDUCTOR RF-CH-MLD 100UH 5% .166DX.385LG	28480	9140-0210
A3A3L3	9100-1618	1	2	INDUCTOR RF-CH-MLD 5.6UH 10%	28480	9100-1618
A3A3L4	9100-1620	5	2	INDUCTOR RF-CH-MLD 15UH 10% .166DX.385LG	28480	9100-1620
A3A3L5	9100-1618	1		INDUCTOR RF-CH-MLD 5.6UH 10%	28480	9100-1618
A3A3L6	9100-1620	5		INDUCTOR RF-CH-MLD 15UH 10% .166DX.385LG	28480	9100-1620
A3A3Q1	1855-0081	1	8	TRANSISTOR J-FET N-CHAN D-MODE SI	28480	1855-0081
A3A3Q2	1855-0081	1		TRANSISTOR J-FET N-CHAN D-MODE SI	28480	1855-0081
A3A3Q3	1855-0081	1		TRANSISTOR J-FET N-CHAN D-MODE SI	28480	1855-0081
A3A3Q4	1855-0081	1		TRANSISTOR J-FET N-CHAN D-MODE SI	28480	1855-0081
A3A3Q5	1855-0241	5	2	TRANSISTOR MOSFET N-CHAN E-MODE TO-72 SI	18324	SD215
A3A3Q6	1855-0050	4	2	TRANSISTOR-JFET DUAL N-CHAN D-MODE SI	28480	1855-0050
A3A3Q7	1855-0020	8	2	TRANSISTOR J-FET N-CHAN D-MODE TO-18 SI	28480	1855-0020
A3A3Q8	1855-0020	8		TRANSISTOR J-FET N-CHAN D-MODE TO-18 SI	28480	1855-0020
A3A3Q9	1853-0034	0	3	TRANSISTOR PNP SI TO-18 PD=360MW	28480	1853-0034
A3A3Q10	1855-0241	5		TRANSISTOR MOSFET N-CHAN E-MODE TO-72 SI	18324	SD215
A3A3Q11	1855-0050	4		TRANSISTOR-JFET DUAL N-CHAN D-MODE SI	28480	1855-0050
A3A3Q12	1855-0081	1		TRANSISTOR J-FET N-CHAN D-MODE SI	28480	1855-0081
A3A3Q13	1855-0081	1		TRANSISTOR J-FET N-CHAN D-MODE SI	28480	1855-0081
A3A3Q14	1855-0081	1		TRANSISTOR J-FET N-CHAN D-MODE SI	28480	1855-0081
A3A3Q15	1855-0081	1		TRANSISTOR J-FET N-CHAN D-MODE SI	28480	1855-0081
A3A3Q16	1853-0034	0		TRANSISTOR PNP SI TO-18 PD=360MW	28480	1853-0034
A3A3Q17	1853-0034	0		TRANSISTOR PNP SI TO-18 PD=360MW	28480	1853-0034
A3A3R1	2100-3356	1	1	RESISTOR-TRMR 200K 10% C SIDE-ADJ 1-TRN	28480	2100-3356
A3A3R2	2100-3357	2	1	RESISTOR-TRMR 500K 10% C SIDE-ADJ 1-TRN	28480	2100-3357
A3A3R3	0698-3440	7	3	RESISTOR 196 1% .125W F TC=0+-100	24546	C4-1/8-T0-196R-F
A3A3R4	2100-3207	1	2	RESISTOR-TRMR 5K 10% C SIDE-ADJ 1-TRN	28480	2100-3207
A3A3R5	2100-3207	1		RESISTOR-TRMR 5K 10% C SIDE-ADJ 1-TRN	28480	2100-3207
A3A3R6	2100-3274	2	2	RESISTOR-TRMR 10K 10% C SIDE-ADJ 1-TRN	28480	2100-3274
A3A3R7	2100-3351	6	2	RESISTOR-TRMR 500 10% C SIDE-ADJ 1-TRN	28480	2100-3351
A3A3R8	2100-3351	6		RESISTOR-TRMR 500 10% C SIDE-ADJ 1-TRN	28480	2100-3351
A3A3R9	2100-3274	2		RESISTOR-TRMR 10K 10% C SIDE-ADJ 1-TRN	28480	2100-3274
A3A3R10	0698-5350	2	8	RESISTOR 2.613K .1% .125W F TC=0+-25	28480	0698-5350
A3A3R11	0698-5350	2		RESISTOR 2.613K .1% .125W F TC=0+-25	28480	0698-5350
A3A3R12	0698-3157	3	6	RESISTOR 19.6K 1% .125W F TC=0+-100	24546	C4-1/8-T0-1962-F
A3A3R13	0698-5350	2		RESISTOR 2.613K .1% .125W F TC=0+-25	28480	0698-5350
A3A3R14	0698-5350	2		RESISTOR 2.613K .1% .125W F TC=0+-25	28480	0698-5350
A3A3R15	0698-7095	6	2	RESISTOR 11K .25% .125W F TC=0+-50	28480	0698-7095
A3A3R16	0698-3428	1	2	RESISTOR 14.7 1% .125W F TC=0+-100	03888	PME55-1/8-T0-14R7-F
A3A3R17	0698-0085	0	2	RESISTOR 2.61K 1% .125W F TC=0+-100	24546	C4-1/8-T0-2611-F
A3A3R18	0698-5350	2		RESISTOR 2.613K .1% .125W F TC=0+-25	28480	0698-5350
A3A3R19	0757-0442	9	4	RESISTOR 10K 1% .125W F TC=0+-100	24546	C4-1/8-T0-1002-F
A3A3R20	0757-0438	3	3	RESISTOR 5.11K 1% .125W F TC=0+-100	24546	C4-1/8-T0-5111-F
A3A3R21	0757-0462	3	1	RESISTOR 75K 1% .125W F TC=0+-100	24546	C4-1/8-T0-7502-F
A3A3R22	0698-3440	7		RESISTOR 196 1% .125W F TC=0+-100	24546	C4-1/8-T0-196R-F
A3A3R23	0698-0084	9	3	RESISTOR 2.15K 1% .125W F TC=0+-100	24546	C4-1/8-T0-2151-F
A3A3R24	0757-0424	7	2	RESISTOR 1.1K 1% .125W F TC=0+-100	24546	C4-1/8-T0-1101-F
A3A3R25	0698-3161	9	1	RESISTOR 38.3K 1% .125W F TC=0+-100	24546	C4-1/8-T0-3832-F
A3A3R26	0757-0444	1	1	RESISTOR 12.1K 1% .125W F TC=0+-100	24546	C4-1/8-T0-1212-F
A3A3R27	0698-5350	2		RESISTOR 2.613K .1% .125W F TC=0+-25	28480	0698-5350
A3A3R28	0698-5350	2		RESISTOR 2.613K .1% .125W F TC=0+-25	28480	0698-5350
A3A3R29	0698-5350	2		RESISTOR 2.613K .1% .125W F TC=0+-25	28480	0698-5350
A3A3R30	0698-7095	6		RESISTOR 11K .25% .125W F TC=0+-50	28480	0698-7095
A3A3R31	0698-3428	1		RESISTOR 14.7 1% .125W F TC=0+-100	03888	PME55-1/8-T0-14R7-F
A3A3R32	0757-0442	9		RESISTOR 10K 1% .125W F TC=0+-100	24546	C4-1/8-T0-1002-F
A3A3R33	0698-0085	0		RESISTOR 2.61K 1% .125W F TC=0+-100	24546	C4-1/8-T0-2611-F
A3A3R34	0757-0442	9		RESISTOR 10K 1% .125W F TC=0+-100	24546	C4-1/8-T0-1002-F
A3A3R35	0698-3136	8	1	RESISTOR 17.8K 1% .125W F TC=0+-100	24546	C4-1/8-T0-1782-F
A3A3R36	0757-0438	3		RESISTOR 5.11K 1% .125W F TC=0+-100	24546	C4-1/8-T0-5111-F
A3A3R37	0698-3440	7		RESISTOR 196 1% .125W F TC=0+-100	24546	C4-1/8-T0-196R-F
A3A3R38	0698-0084	9		RESISTOR 2.15K 1% .125W F TC=0+-100	24546	C4-1/8-T0-2151-F
A3A3R39	0698-3157	3		RESISTOR 19.6K 1% .125W F TC=0+-100	24546	C4-1/8-T0-1962-F
A3A3R40	0698-3157	3		RESISTOR 19.6K 1% .125W F TC=0+-100	24546	C4-1/8-T0-1962-F
A3A3R41	0698-3157	3		RESISTOR 19.6K 1% .125W F TC=0+-100	24546	C4-1/8-T0-1962-F
A3A3R42	0698-3157	3		RESISTOR 19.6K 1% .125W F TC=0+-100	24546	C4-1/8-T0-1962-F
A3A3R43	2100-3354	9	1	RESISTOR-TRMR 50K 10% C SIDE-ADJ 1-TRN	28480	2100-3354
A3A3R44	0698-3157	3		RESISTOR 19.6K 1% .125W F TC=0+-100	24546	C4-1/8-T0-1962-F
A3A3R45	0698-3441	8	1	RESISTOR 215 1% .125W F TC=0+-100	24546	C4-1/8-T0-215R-F
A3A3R46	0757-0442	9		RESISTOR 10K 1% .125W F TC=0+-100	24546	C4-1/8-T0-1002-F
A3A3R47	0698-6963	5	2	RESISTOR 5.55K .1% .125W F TC=0+-25	28480	0698-6963
A3A3R48	0698-6963	5		RESISTOR 5.55K .1% .125W F TC=0+-25	28480	0698-6963
A3A3R49	0698-3150	6	1	RESISTOR 2.37K 1% .125W F TC=0+-100	24546	C4-1/8-T0-2371-F
A3A3R50	0757-0424	7		RESISTOR 1.1K 1% .125W F TC=0+-100	24546	C4-1/8-T0-1101-F

TABLE 2. A3A3, REPLACEABLE PARTS (3 OF 3)

Reference Designation	HP Part Number	C D	Qty	Description	Mfr Code	Mfr Part Number
A3A3R51	0698-0084	9		RESISTOR 2.15K 1% .125W F TC=0+-100	24546	C4-1/8-T0-2151-F
A3A3R52	0757-0421	4	1	RESISTOR 825 1% .125W F TC=0+-100	24546	C4-1/8-T0-825R-F
A3A3R53	0757-0438	3		RESISTOR 5.11K 1% .125W F TC=0+-100	24546	C4-1/8-T0-5111-F
A3A3R54	0757-0465	6	1	RESISTOR 100K 1% .125W F TC=0+-100	24546	C4-1/8-T0-1003-F
A3A3R55	0757-0814	9	1	RESISTOR 511 1% .5W F TC=0+-100	28480	0757-0814
A3A3TP1	0360-0535	0	12	TERMINAL TEST POINT PCB	00000	ORDER BY DESCRIPTION
A3A3TP2	0360-0535	0		TERMINAL TEST POINT PCB	00000	ORDER BY DESCRIPTION
A3A3TP3	0360-0535	0		TERMINAL TEST POINT PCB	00000	ORDER BY DESCRIPTION
A3A3TP4	0360-0535	0		TERMINAL TEST POINT PCB	00000	ORDER BY DESCRIPTION
A3A3TP5	0360-0535	0		TERMINAL TEST POINT PCB	00000	ORDER BY DESCRIPTION
A3A3TP6	0360-0535	0		TERMINAL TEST POINT PCB	00000	ORDER BY DESCRIPTION
A3A3TP7	0360-0535	0		TERMINAL TEST POINT PCB	00000	ORDER BY DESCRIPTION
A3A3TP8	0360-0535	0		TERMINAL TEST POINT PCB	00000	ORDER BY DESCRIPTION
A3A3TP9	0360-0535	0		TERMINAL TEST POINT PCB	00000	ORDER BY DESCRIPTION
A3A3TP10	0360-0535	0		TERMINAL TEST POINT PCB	00000	ORDER BY DESCRIPTION
A3A3TP11	0360-0535	0		TERMINAL TEST POINT PCB	00000	ORDER BY DESCRIPTION
A3A3TP12	0360-0535	0		TERMINAL TEST POINT PCB	00000	ORDER BY DESCRIPTION
A3A3U1	1826-0079	6	4	IC OP AMP WB TO-99 PKG	29832	1321
A3A3U2	1826-0089	8	2	IC OP AMP WB TO-99 PKG	29832	1322
A3A3U3	1826-0079	6		IC OP AMP WB TO-99 PKG	29832	1321
A3A3U4	1826-0684	9	2	IC CONV 12-B-D/A 18-DIP-C PKG	28480	1826-0684
A3A3U5	1820-1444	9	2	IC MUXR/DATA-SEL TTL LS 2-TO-1-LINE QUAD	01295	SN74LS298N
A3A3U6	1820-1196	8	2	IC FF TTL LS D-TYPE POS-EDGE-TRIG COM	01295	SN74LS174N
A3A3U7	1826-0079	6		IC OP AMP WB TO-99 PKG	29832	1321
A3A3U8	1826-0684	9		IC CONV 12-B-D/A 18-DIP-C PKG	28480	1826-0684
A3A3U9	1820-1444	9		IC MUXR/DATA-SEL TTL LS 2-TO-1-LINE QUAD	01295	SN74LS298N
A3A3U10	1820-1196	8		IC FF TTL LS D-TYPE POS-EDGE-TRIG COM	01295	SN74LS174N
A3A3U11	1826-0079	6		IC OP AMP WB TO-99 PKG	29832	1321
A3A3U12	1826-0089	8		IC OP AMP WB TO-99 PKG	29832	1322
A3A3U13	1826-0081	0	1	IC OP AMP WB TO-99 PKG	27014	LM318H
A3A3U14	1820-1195	7	1	IC FF TTL LS D-TYPE POS-EDGE-TRIG COM	01295	SN74LS175N
A3A3U15	1820-1197	9	1	IC GATE TTL LS NAND QUAD 2-INP	01295	SN74LS00N
A3A3VR1	1902-3036	3	1	DIODE-ZNR 3.16V 5% DO-7 PD=.4W TC=-.064%	28480	1902-3036
A3A3VR2	1902-0686	3	1	DIODE-ZNR 6.2V 2% DO-7 PD=.4W TC=+.002%	04713	1N825
A3A3VR3	1902-3094	3	1	DIODE-ZNR 5.11V 2% DO-35 PD=.4W	28480	1902-3094
				MISCELLANEOUS PARTS		
	4040-0751	8	2	EXTR PC BD ORN	28480	4040-0751

NOTE

- FOR INSTRUCTIONS ON THE USE OF SIGNATURE ANALYSIS DIAGRA
  READ THE SIGNATURE ANALYSIS DESCRIPTION SECTION OF THIS

WAVEFORM CHECK

SPECTRUM ANALYZER CONNECTIONS:
DISCONNECT REAR-PANEL 50-WIRE CABLE
JUMPER A3A7TP6 TO A3A7TP4
JUMPER A3A6TP3 TO A3A6TP6
ADJUST A3A2R12 LL THRESH FULLY CW
JUMPER A1A8TP1 TO A1A3TP2

SIGNATURE ANALYZER CONNECTIONS:
NONE REQUIRED

PRESS:
A3A7S1 AFTER COMPLETING CONNECTIONS FOR EACH TEST OR CHECK

A3A3 CHECK

SPECTRUM ANALYZER CONNECTIONS:
ADJUST A3A2R12 LL THRESH FULLY CW
GROUND A3A6TP6 TO A3A7TP5
JUMPER A3A6TP3 TO A3A6TP6

SIGNATURE ANALYZER CONNECTIONS:
CLOCK ⌐ TO A3A6TP4 (LCLK)
START ⌐ TO A3A6TP2
STOP ⌐ TO A3A6TP2
POD GND TO A3A6TP1
PROBE GND TO A3A3TP1

PRESS:
A3A7S1 AFTER COMPLETING CONNECTIONS FOR EACH TEST OR CHECK

GNATURE ANALYSIS DIAGRAMS
IPTION SECTION OF THIS MANUAL.

FOR EACH TEST OR CHECK

FOR EACH TEST OR CHECK

A3A3
LINE GENERATOR
85662-60128

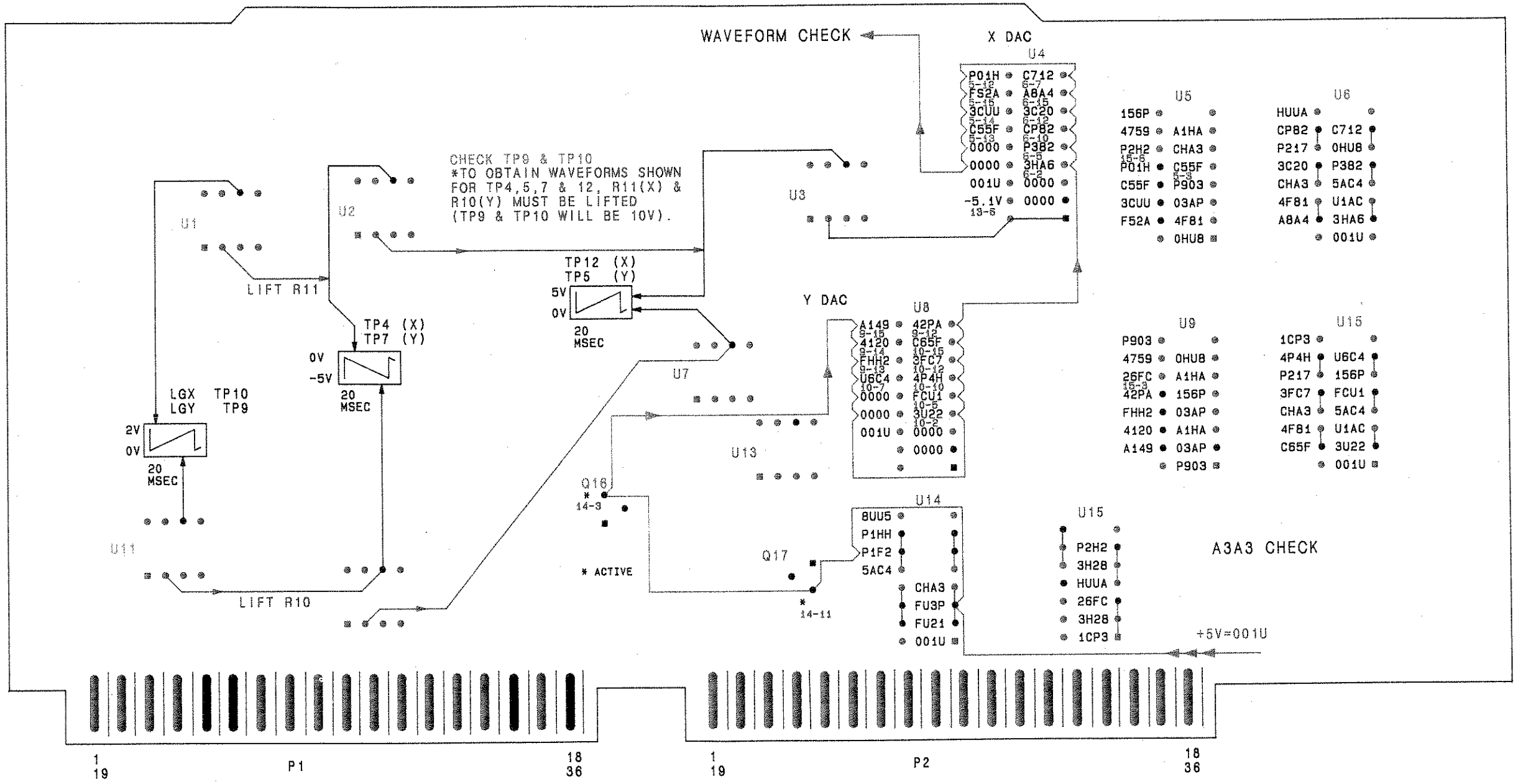

A3A3

FIGURE 7. A3A3 LINE GENERATOR, SIGNATURE ANALYSIS TROUBLESHOOTING DIAGRAM

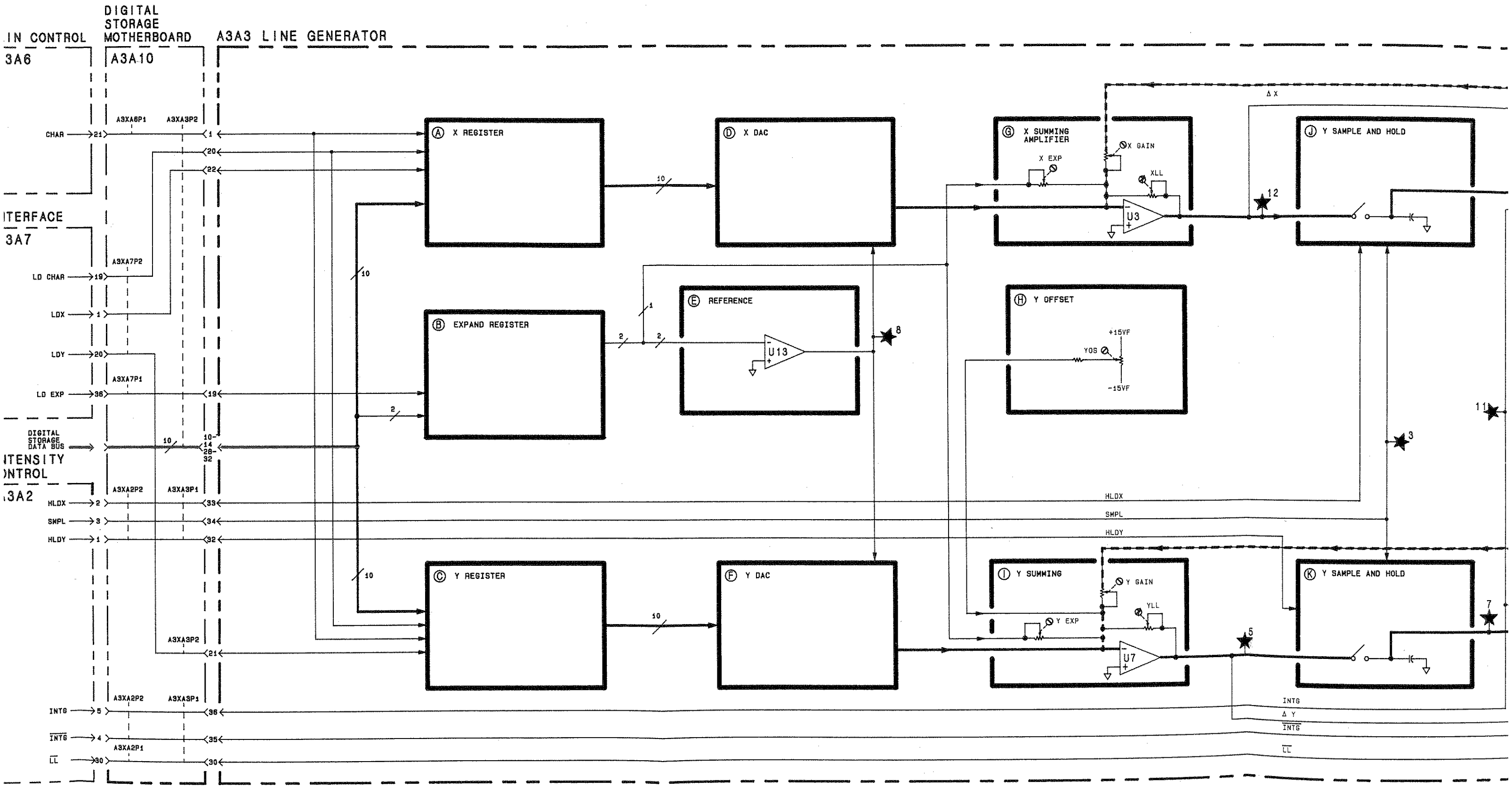

IN CONTROL
3A6
DIGITAL STORAGE MOTHERBOARD
A3A10
A3A3 LINE GENERATOR
CHAR
ITERFACE
3A7
LD CHAR
LDX
LDY
LD EXP
DIGITAL STORAGE DATA BUS
ITENSITY
ONTROL
3A2
HLDX
SMPL
HLDY
INTG
INTG
LL
A3XA6P1
A3XA3P2
A3XA7P2
A3XA7P1
A3XA2P2
A3XA3P1
A3XA2P1
A X REGISTER
B EXPAND REGISTER
C Y REGISTER
D X DAC
E REFERENCE
F Y DAC
G X SUMMING AMPLIFIER
X EXP
X GAIN
XLL
U3
H Y OFFSET
+15VF
YOS
-15VF
I Y SUMMING
Y GAIN
Y EXP
YLL
U7
J Y SAMPLE AND HOLD
K Y SAMPLE AND HOLD
ΔX
ΔY
HLDX
SMPL
HLDY
INTG
INTG
LL

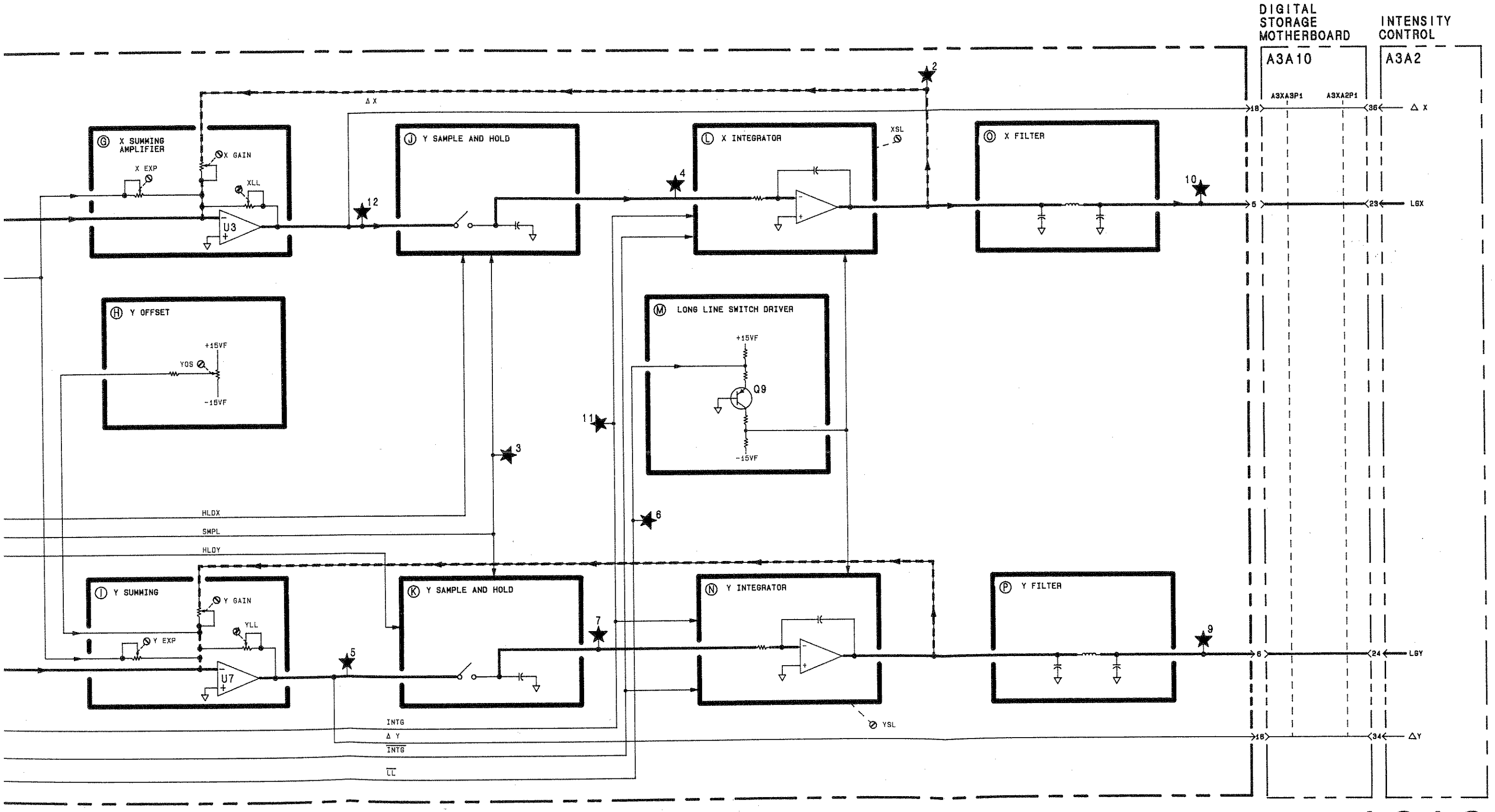

A3A3

FIGURE 8. A3A3 LINE GENERATOR, BLOCK DIAGRAM

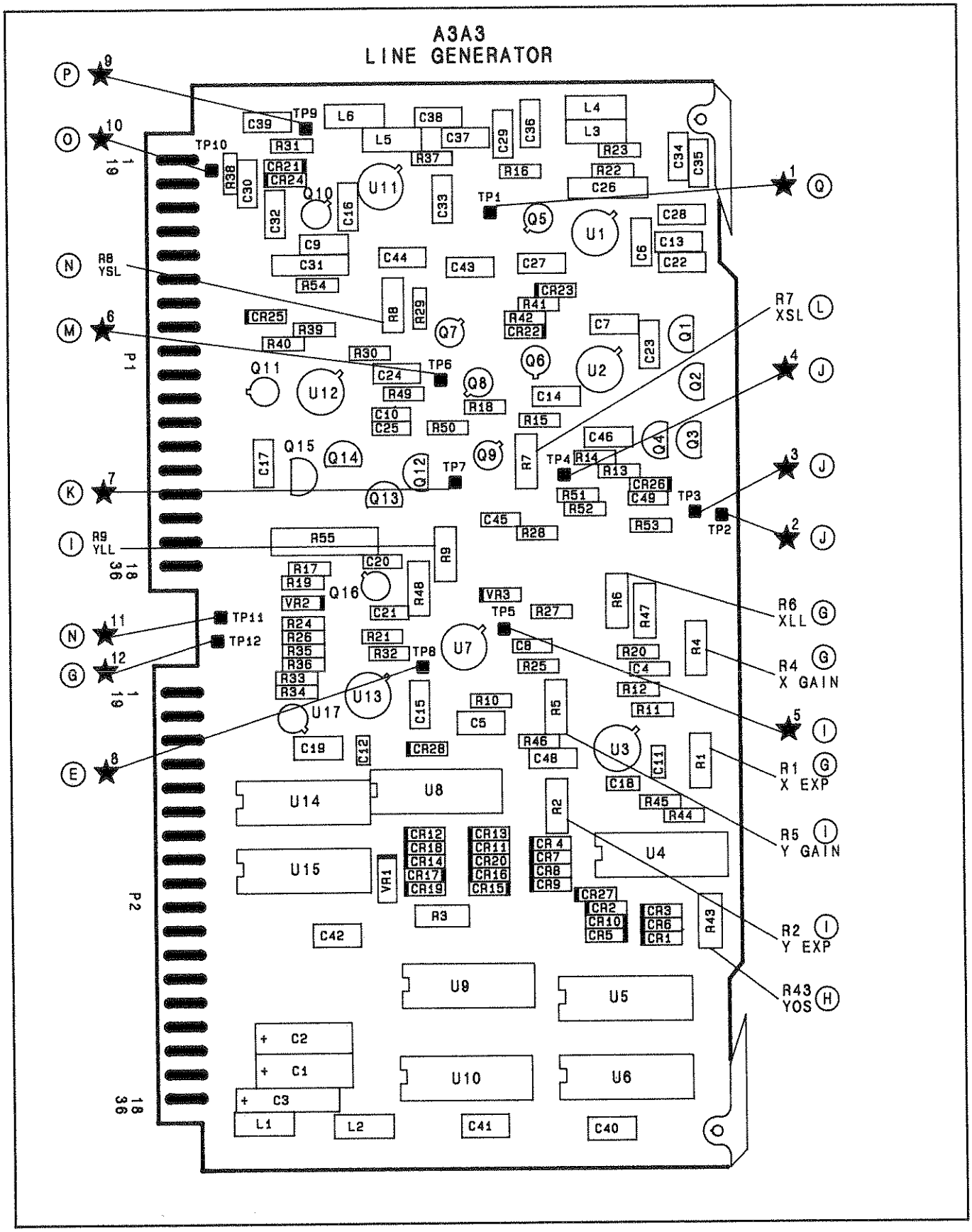

FIGURE 9. A3A3 LINE GENERATOR, COMPONENT LOCATIONS

A3A3 LINE GENERATOR 85662-60128 (1 OF 2)

P1

PIN	SIGNAL	TO/FROM	FUNCTION BLOCK
1	GND		Q
19	GND		Q
2	GND		Q
20	GND		Q
3	GND		Q
21	GND		Q
4	GND		Q
22	GND		Q
5	LGX	A3A2P1-23	O
23	GND		Q
6	LGY	A3A2P1-24	Q
24	GND		Q
7	GND		Q
25	GND		Q
8	GND		Q
26	GND		Q
9	GND		Q
27	GND		Q
10	GND		Q
28	GND		Q
11	GND		Q
29	GND		Q
12	GND		Q
30	LLL	A3A2P1-30	Q
13	GND		Q
31	GND		Q
14	GND		Q
32	HLDY	A3A2P2-1	K
15	GND		Q
33	HLDX	A3A2P2-2	J
16	Δ Y	A3A2P1-34	I
34	SMPL	A3A2P2-3	J
17	GND		Q
35	LINTG	A3A2P2-3	L N
18	Δ X	A3A2P1-36	G
36	INTG	A3A2P2-5	L N

P2

PIN	SIGNAL	TO/FROM	FUNCTION BLOCK
1	CHAR	A3A6P1-21	A
19	LDEXP	A3A7P2-19	B
2	NC		
20	LD CHAR	A3A7P2-19	A C
3	NC		
21	LDY	A3A7P2-1	
4	NC		
22	LDX	A3A7P2-1	A
5	NC		
23	NC		
6	NC		
24	NC		
7	NC		
25	NC		
8	NC		
26	NC		
9	NC		
27	NC		
10	BØ	DIGITAL STORAGE BUS	A
28	B1		A
11	B2		A
29	B3		A
12	B4		A
30	B5		A
13	B6		A
31	B7		A
14	B8		A
32	B9		A
15	NC		
33	NC		
16	DGND		Q
34	DGND		Q
17	+5V		Q
35	AGND		Q
18	+15V		Q
36	-15V		Q

SERIAL PREFIX: 2403A

FIGURE 10. A3A3 LINE GENERATOR, SCHEMATIC DIAGRAM (1 OF 2)

A3A3 LINE GENERATOR
85662-60128 (2 OF 2)

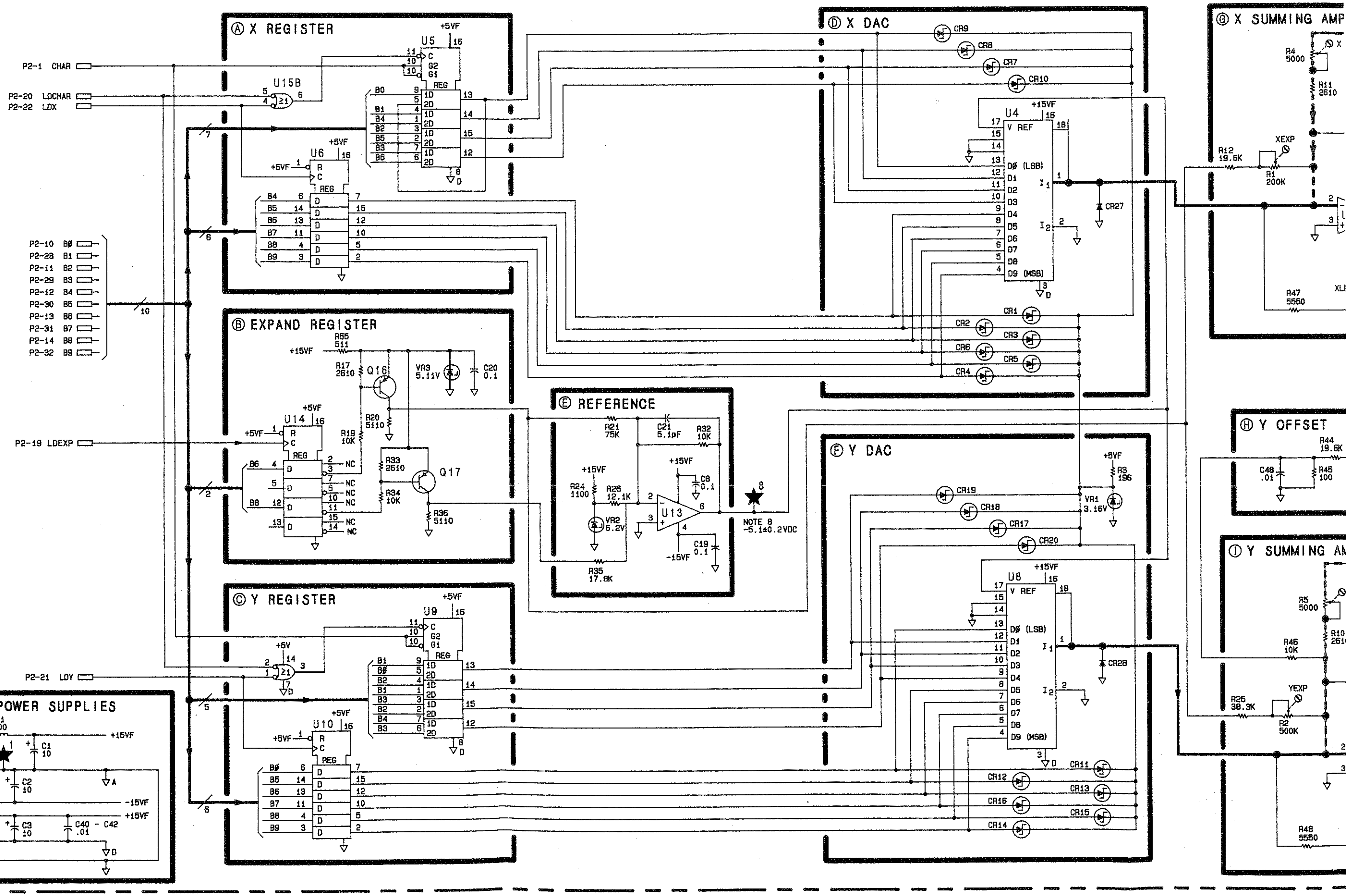

SERIAL PREFIX: 2403A

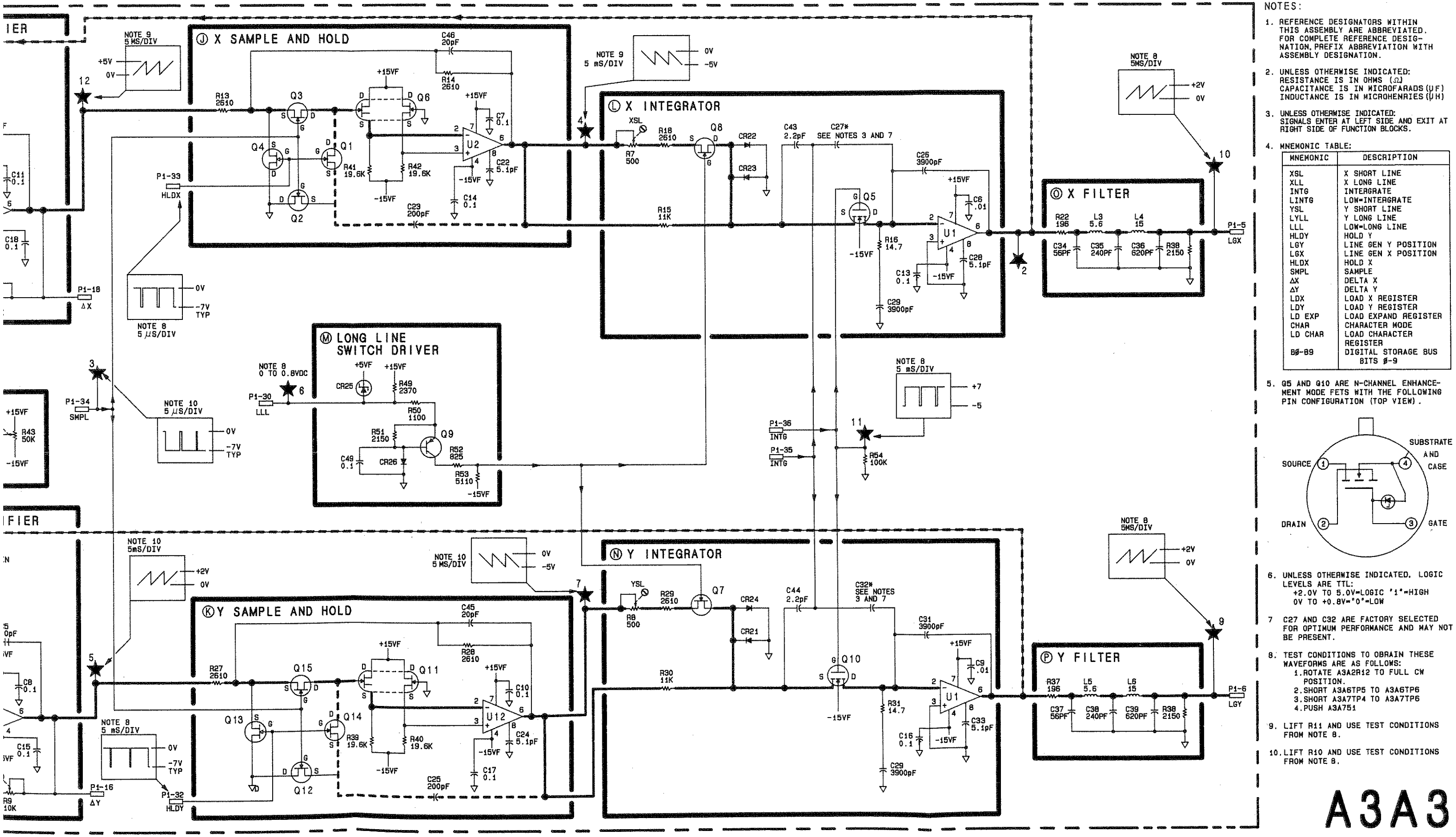

NOTES:

1. REFERENCE DESIGNATORS WITHIN THIS ASSEMBLY ARE ABBREVIATED. FOR COMPLETE REFERENCE DESIGNATION, PREFIX ABBREVIATION WITH ASSEMBLY DESIGNATION.
2. UNLESS OTHERWISE INDICATED: RESISTANCE IS IN OHMS (Ω) CAPACITANCE IS IN MICROFARADS (μF) INDUCTANCE IS IN MICROHENRIES (μH)
3. UNLESS OTHERWISE INDICATED: SIGNALS ENTER AT LEFT SIDE AND EXIT AT RIGHT SIDE OF FUNCTION BLOCKS.
4. MNEMONIC TABLE:

MNEMONIC	DESCRIPTION
XSL	X SHORT LINE
XLL	X LONG LINE
INTG	INTERGRATE
LINTG	LOW-INTERGRATE
YSL	Y SHORT LINE
LYLL	Y LONG LINE
LLL	LOW-LONG LINE
HLDY	HOLD Y
LGY	LINE GEN Y POSITION
LGX	LINE GEN X POSITION
HLDX	HOLD X
SMPL	SAMPLE
ΔX	DELTA X
ΔY	DELTA Y
LDX	LOAD X REGISTER
LDY	LOAD Y REGISTER
LD EXP	LOAD EXPAND REGISTER
CHAR	CHARACTER MODE
LD CHAR	LOAD CHARACTER REGISTER
B0-B9	DIGITAL STORAGE BUS BITS 0-9

5. Q5 AND Q10 ARE N-CHANNEL ENHANCEMENT MODE FETS WITH THE FOLLOWING PIN CONFIGURATION (TOP VIEW).

6. UNLESS OTHERWISE INDICATED, LOGIC LEVELS ARE TTL:
   +2.0V TO 5.0V=LOGIC '1'=HIGH
   0V TO +0.8V='0'=LOW
7. C27 AND C32 ARE FACTORY SELECTED FOR OPTIMUM PERFORMANCE AND MAY NOT BE PRESENT.
8. TEST CONDITIONS TO OBRAIN THESE WAVEFORMS ARE AS FOLLOWS:
   1. ROTATE A3A2R12 TO FULL CW POSITION.
   2. SHORT A3A6TP5 TO A3A6TP6
   3. SHORT A3A7TP4 TO A3A7TP6
   4. PUSH A3A751
9. LIFT R11 AND USE TEST CONDITIONS FROM NOTE 8.
10. LIFT R10 AND USE TEST CONDITIONS FROM NOTE 8.

A3A3

FIGURE 10. A3A3 LINE GENERATOR, SCHEMATIC DIAGRAM (2 OF 2)

A3A4 MEMORY, CIRCUIT DESCRIPTION

Memory Assembly A3A4 contains 4096 12-bit words of static random-access memory (RAM) and 2048 8-bit words of read-only memory (ROM), plus the necessary latches, buffers, and control logic for input and output operations. Data for display annotation (center frequency, reference level, etc.), graticules, characters, and TRACE A and TRACE B is stored in memory.

Display Memory (E)

Display memory contains two 2k x 12 blocks. The lower block, made up of U4 and U5, corresponds to addresses 0000 through 2047 and is enabled by LCE1 from Control Logic. The upper block, U3 and U6, corresponds to addresses 2048 through 4095 and is enabled by LCE2. Four of the eight input/output lines of U5 and U6 are not used since only 12-bit data words are required. LOE enables the RAM outputs for read operations only. LWE writes data to the RAM.

The RAM address latches, U7 and U8, store the memory address during read and write operations. These latches are required because the memory address register is occasionally changed before a read operation is completed. When not enabled, these latches are transparent.

Memory Address Register (A)

Registers U15 and U16 store the memory address for display memory and character stroke memory.

Memory Data Input Register (C)

Registers U9 and U11 store input data to be written to the display memory for write operations only.

Buffers U10 and U12 pass data from Memory Data Input Register to display memory for write operations only.

Memory Data Output Buffer (B)

Buffers U13 and U14 enable the output data from either display memory or character stroke memory to the Digital Storage Bus for read operations only.

Control Logic (D)

Control Logic generates control signals for display memory and buffers in Memory Data Input Register. When control line CE (chip enable) is true, RAM address 11 (RA11) from U7 generates low chip enable 1 and 2 (LCE1, LCE2). This enables the lower or upper block of display memory during read and write operations.

During read operations, LOE (low output enable) is generated in U17D when CE is true and LWRITE (low write) is false. During write operations, U17C produces LWE (low write enable) when CE and LWRITE are true.

Inverters U18E and U18D produce LDINEN (low data input enable) when LWE is true. The two inverters delay the rising edge of LDINEN to hold the data lines after LWE goes false, at the end of a write operation.

Character Stroke Memory (G)

ROM U2 is a 2048 word by 8-bit read-only memory that contains the relative X and Y axis coordinate information that forms displayed characters. Each 8-bit word contains three bits of X-axis information, four bits of Y-axis information, and one bit for blanking. The ROM is addressed from the memory address register and the stroke counter. The ROM outputs are enabled by LROMEN (low ROM enable).

Stroke Counter (F)

The stroke counter drives the lower three address bits of character stroke memory. Since most characters contain less than eight line segments, the character information is stored in consecutive 8-word blocks in the ROM. The memory address register contains the address of the 8-word block while the stroke counter contains the address of the individual strokes. To read the information for all the line segments of a character, the memory address register is held constant while the stroke counter addresses up to eight strokes.

The STROK8 output goes high to signal the processor that the eighth stroke has been reached. LCLRSA clears the counter at the beginning of each character and INCRSA is used to increment the counter after each stroke.

A3A4 MEMORY, TROUBLESHOOTING

Signature Analysis Test Program 4 is used to write and read various patterns from the Display Memory **(E)** and to read the Character Stroke Memory **(G)**. An explanation of Test Program 4 is located in the "A3 Digital Storage Troubleshooting" tab. This test requires that the Digital Storage input bus be good (i.e., there are no shorted Digital Storage data lines). This would show up either as an incorrect 5 Vdc signature or as incorrect inputs to the memory address registers U15 and U16. To isolate a hard bus bit failure, Test Program 1 on the A3A5 Data Manipulator SA Diagram 1 must be used.

TABLE 1. A3A4, REPLACEABLE PARTS

Reference Designation	HP Part Number	C D	Qty	Description	Mfr Code	Mfr Part Number
A3A4	85662-60125	0	1	BOARD ASSEMBLY, MEMORY	28480	85662-60125
A3A4C1	0160-4835	7	18	CAPACITOR-FXD .1UF +-10% 50VDC CER	28480	0160-4835
A3A4C2	0160-4835	7		CAPACITOR-FXD .1UF +-10% 50VDC CER	28480	0160-4835
A3A4C3	0160-4835	7		CAPACITOR-FXD .1UF +-10% 50VDC CER	28480	0160-4835
A3A4C4	0160-4835	7		CAPACITOR-FXD .1UF +-10% 50VDC CER	28480	0160-4835
A3A4C5	0160-4835	7		CAPACITOR-FXD .1UF +-10% 50VDC CER	28480	0160-4835
A3A4C6	0160-4835	7		CAPACITOR-FXD .1UF +-10% 50VDC CER	28480	0160-4835
A3A4C7	0160-4835	7		CAPACITOR-FXD .1UF +-10% 50VDC CER	28480	0160-4835
A3A4C8	0180-1746	5	2	CAPACITOR-FXD 15UF+-10% 20VDC TA	56289	150D156X9020B2
A3A4C9	0160-4835	7		CAPACITOR-FXD .1UF +-10% 50VDC CER	28480	0160-4835
A3A4C10	0160-4835	7		CAPACITOR-FXD .1UF +-10% 50VDC CER	28480	0160-4835
A3A4C11	0160-4835	7		CAPACITOR-FXD .1UF +-10% 50VDC CER	28480	0160-4835
A3A4C12	0160-4835	7		CAPACITOR-FXD .1UF +-10% 50VDC CER	28480	0160-4835
A3A4C13	0160-4835	7		CAPACITOR-FXD .1UF +-10% 50VDC CER	28480	0160-4835
A3A4C14	0160-4835	7		CAPACITOR-FXD .1UF +-10% 50VDC CER	28480	0160-4835
A3A4C15	0160-4835	7		CAPACITOR-FXD .1UF +-10% 50VDC CER	28480	0160-4835
A3A4C16	0160-4835	7		CAPACITOR-FXD .1UF +-10% 50VDC CER	28480	0160-4835
A3A4C17				NOT ASSIGNED		
A3A4C18	0160-4835	7		CAPACITOR-FXD .1UF +-10% 50VDC CER	28480	0160-4835
A3A4C19	0160-4835	7		CAPACITOR-FXD .1UF +-10% 50VDC CER	28480	0160-4835
A3A4C20				NOT ASSIGNED		
A3A4C21	0160-4835	7		CAPACITOR-FXD .1UF +-10% 50VDC CER	28480	0160-4835
A3A4C22	0180-1746	5		CAPACITOR-FXD 15UF+-10% 20VDC TA	56289	150D156X9020B2
A3A4U1	1820-1278	7	1	IC CNTR TTL LS BIN UP/DOWN SYNCHRO	01295	SN74LS191N
A3A4U2	1818-0293	9	1	IC NMOS 16384 (16K) ROM 450-NS	55576	SYD2316B MASKED
A3A4U3	1818-1611	7	4	IC CMOS 16384 (16K) STAT RAM 150-NS 3-S	34013	HM6116P-3
A3A4U4	1818-1611	7		IC CMOS 16384 (16K) STAT RAM 150-NS 3-S	34013	HM6116P-3
A3A4U5	1818-1611	7		IC CMOS 16384 (16K) STAT RAM 150-NS 3-S	34013	HM6116P-3
A3A4U6	1818-1611	7		IC CMOS 16384 (16K) STAT RAM 150-NS 3-S	34013	HM6116P-3
A3A4U7	1820-2102	8	2	IC LCH TTL LS D-TYPE OCTL	01295	SN74LS373N
A3A4U8	1820-2102	8		IC LCH TTL LS D-TYPE OCTL	01295	SN74LS373N
A3A4U9	1820-1196	8	4	IC FF TTL LS D-TYPE POS-EDGE-TRIG COM	01295	SN74LS174N
A3A4U10	1820-1492	7	4	IC BFR TTL LS INV HEX 1-INP	01295	SN74LS368AN
A3A4U11	1820-1196	8		IC FF TTL LS D-TYPE POS-EDGE-TRIG COM	01295	SN74LS174N
A3A4U12	1820-1492	7		IC BFR TTL LS INV HEX 1-INP	01295	SN74LS368AN
A3A4U13	1820-1492	7		IC BFR TTL LS INV HEX 1-INP	01295	SN74LS368AN
A3A4U14	1820-1492	7		IC BFR TTL LS INV HEX 1-INP	01295	SN74LS368AN
A3A4U15	1820-1196	8		IC FF TTL LS D-TYPE POS-EDGE-TRIG COM	01295	SN74LS174N
A3A4U16	1820-1196	8		IC FF TTL LS D-TYPE POS-EDGE-TRIG COM	01295	SN74LS174N
A3A4U17	1820-1197	9	1	IC GATE TTL LS NAND QUAD 2-INP	01295	SN74LS00N
A3A4U18	1820-1199	1	1	IC INV TTL LS HEX 1-INP	01295	SN74LS04N
				MISCELLANEOUS PARTS		
	4040-0752	9	2	EXTR-PC BD YEL POLYC .062-BD-THKNS	28480	4040-0752

NOTE

- FOR INSTRUCTIONS ON THE USE OF SIGNATURE ANALYSIS DIAGRAMS READ THE SIGNATURE ANALYSIS DESCRIPTION SECTION OF THIS MANUAL.

MEMORY CHECK

SIGNATURE ANALYZER CONNECTIONS:
CLOCK ⎍ TO A3A7TP1 (SA CLK)
START ⎍ TO A3A6TP2
STOP ⎍ TO A3A6TP2
POD GND TO A3A6TP1
PROBE GND TO A3A4P1-16

SPECTRUM ANALYZER CONNECTIONS:
ADJUST A3A2R12 LL THRESH FULLY CW
CONNECT A3A7J1 JUMPER TO PINS 3 AND 12
JUMPER A3A7TP3 TO A3A7TP6
JUMPER A3A6TP3 TO A3A6TP6

PRESS:
A3A7S1 AFTER COMPLETING CONNECTIONS FOR EACH TEST OR CHECK.

CHARACTER ROM CHECK

SIGNATURE ANALYZER CONNECTIONS:
CLOCK ⎍ TO A3A4P1-21 (INCRSA)
START ⎍ TO A3A6TP2
STOP ⎍ TO A3A6TP2
POD GND TO A3A6TP1
PROBE GND TO A3A4P1-16

SPECTRUM ANALYZER CONNECTIONS:
ADJUST A3A2R12 LL THRESH FULLY CW
CONNECT A3A7J1 JUMPER TO PINS 3 AND 12
JUMPER A3A7TP3 TO A3A7TP6
JUMPER A3A6TP3 TO A3A6TP6

PRESS:
A3A7S1 AFTER COMPLETING CONNECTIONS FOR EACH TEST OR CHECK.

ADDRESS REGISTER CHECK

SIGNATURE ANALYZER CONNECTIONS:
CLOCK ⎍ TO A3A4P1-23 (LDMAR)
START ⎍ TO A3A6TP2
STOP ⎍ TO A3A6TP2
POD GND TO A3A6TP1
PROBE GND TO A3A4P1-16

SPECTRUM ANALYZER CONNECTIONS:
ADJUST A3A2R12 LL THRESH FULLY CW
CONNECT A3A7J1 JUMPER TO PINS 3 AND 12
JUMPER A3A7TP3 TO A3A7TP6
JUMPER A3A6TP3 TO A3A6TP6

PRESS:
A3A7S1 AFTER COMPLETING CONNECTIONS FOR EACH TEST OR CHECK.

A3A4
MEMORY
85662-60125

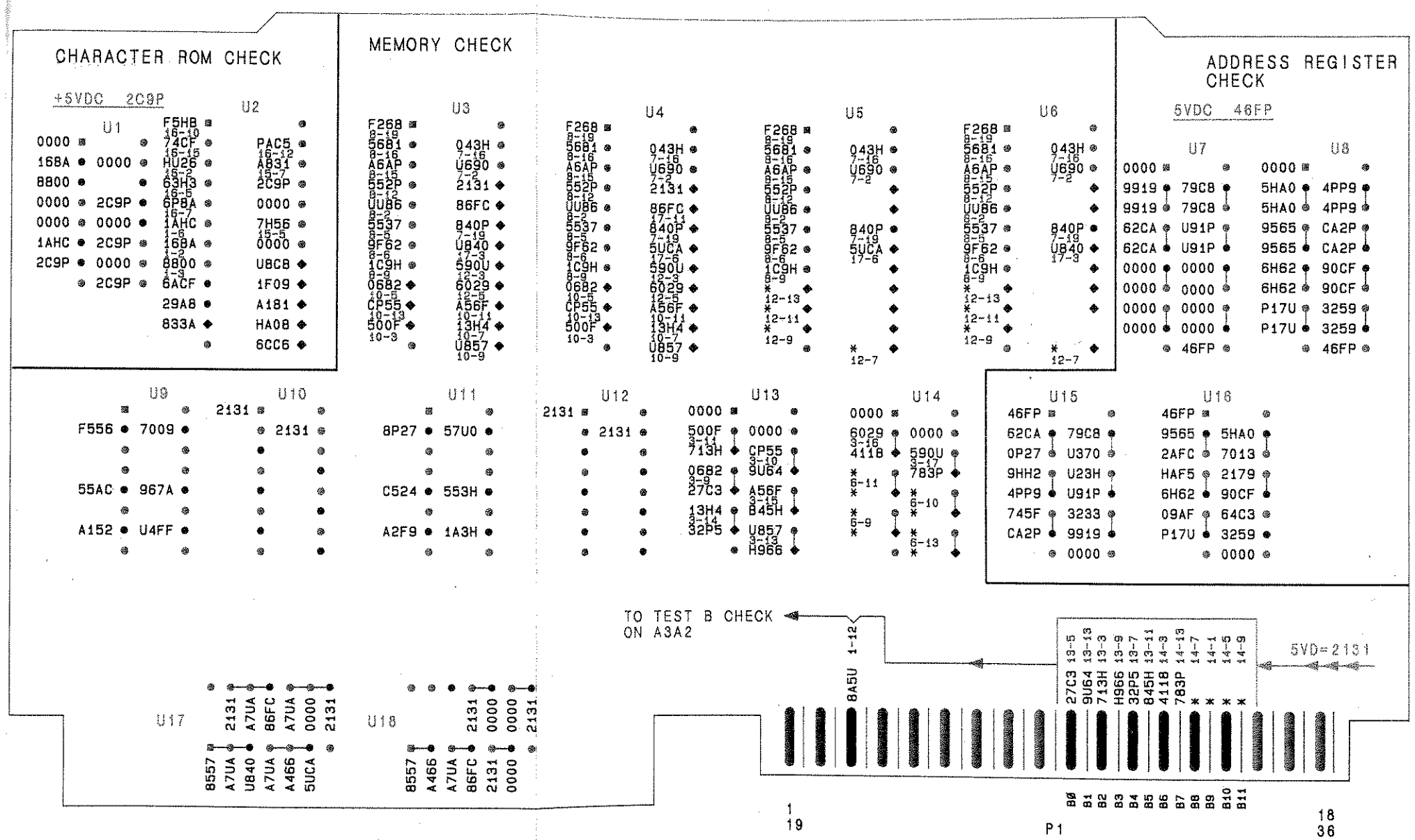

A3A4

FIGURE 1. A3A4 MEMORY, SIGNATURE ANALYSIS TROUBLESHOOTING DIAGRAM

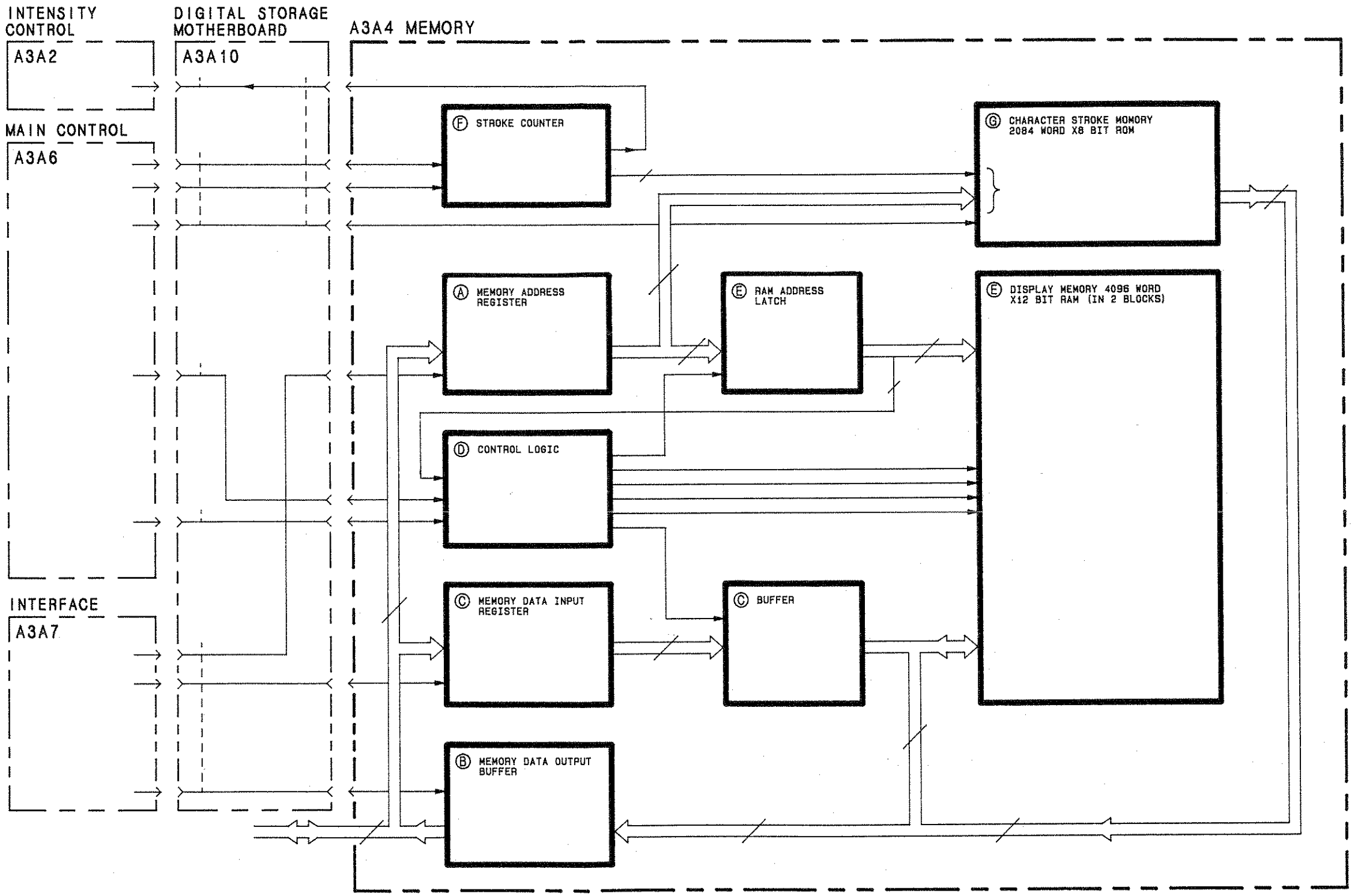

A3A4

FIGURE 2. A3A4 MEMORY, BLOCK DIAGRAM

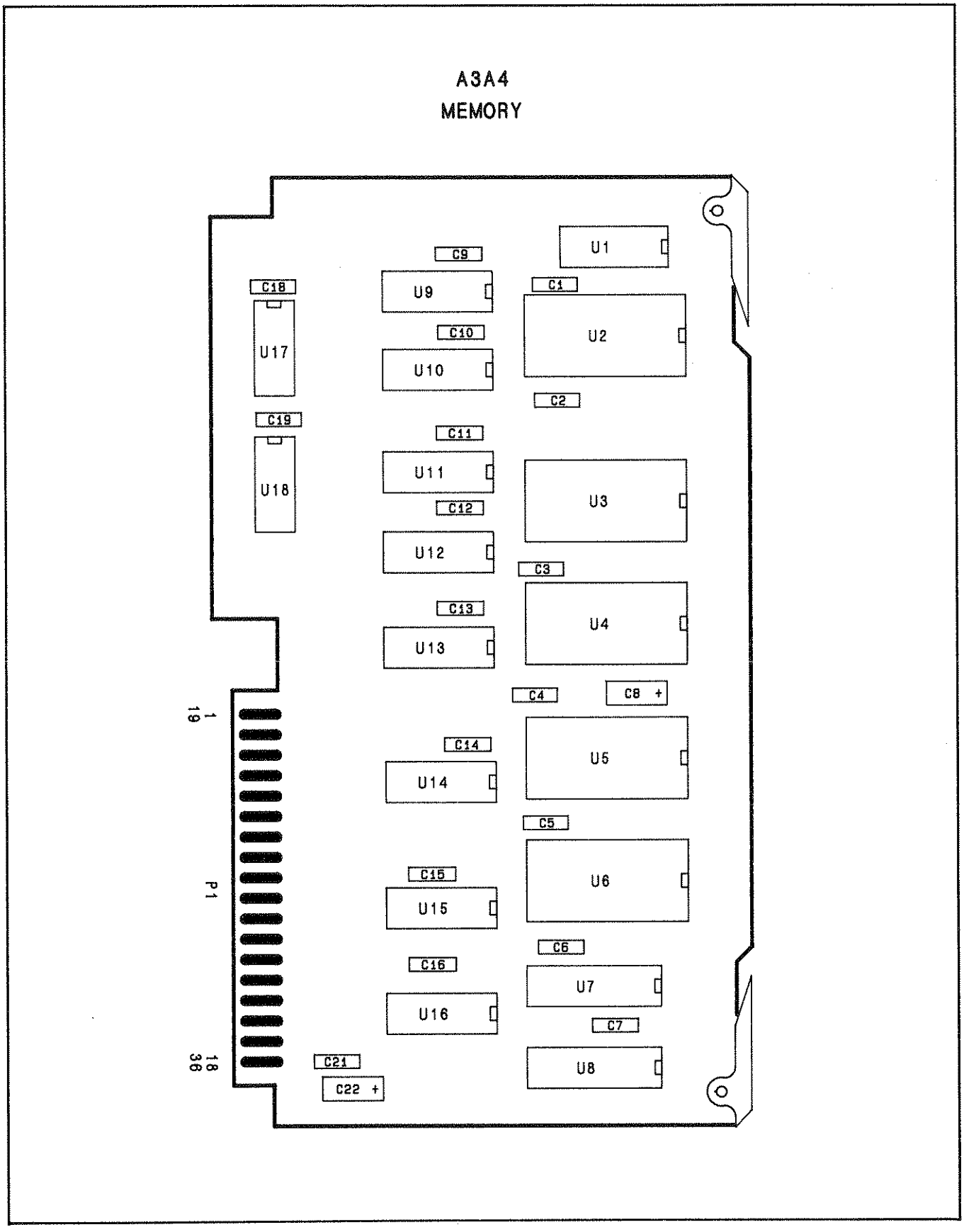

FIGURE 3. A3A4 MEMORY, COMPONENT LOCATIONS

A3A4 MEMORY
85662-60125

P1

PIN	SIGNAL	TO/FROM	FUNCTION BLOCK
1	NC		
19	LWRITE	A3A6P2-22	D
2	LCLRSA	A3A6P1-15	F
20	LROMEN	A3A6P1-22	G
3	STROK8	A3A2P2-15	F
21	INCRSA	A3A6P1-17	F
4	LMEMEN	A3A7P2-5	B
22	CE	A3A6P1-5	D
5	LDMDR	A3A7P2-2	C
23	LDMAR	A3A7P2-3	A
6	NC		
24	NC		
7	NC		
25	NC		
8	NC		
26	NC		
9	NC		
27	NC		
10	B0	DIGITAL STORAGE BUS	A
28	B1		A
11	B2		A
29	B3		A
12	B4		A
30	N5		A
13	B6		A
31	B7		A
14	B8		A
32	B9		A
15	B10		A
33	B11		A
16	DGND		H
34	DGND		H
17	+5V		H
35	NC		
18	NC		
36	NC		

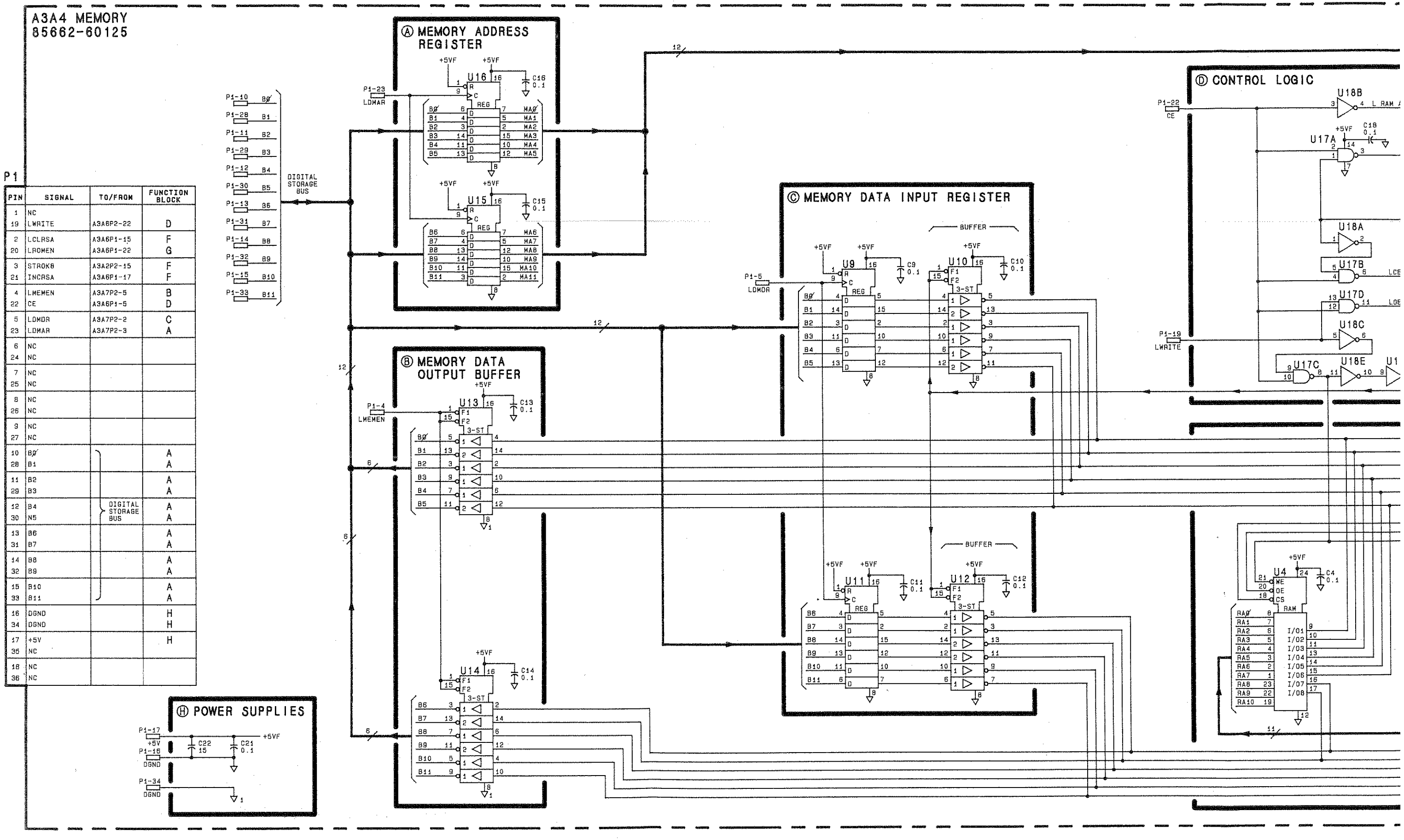

SERIAL PREFIX: 2403A

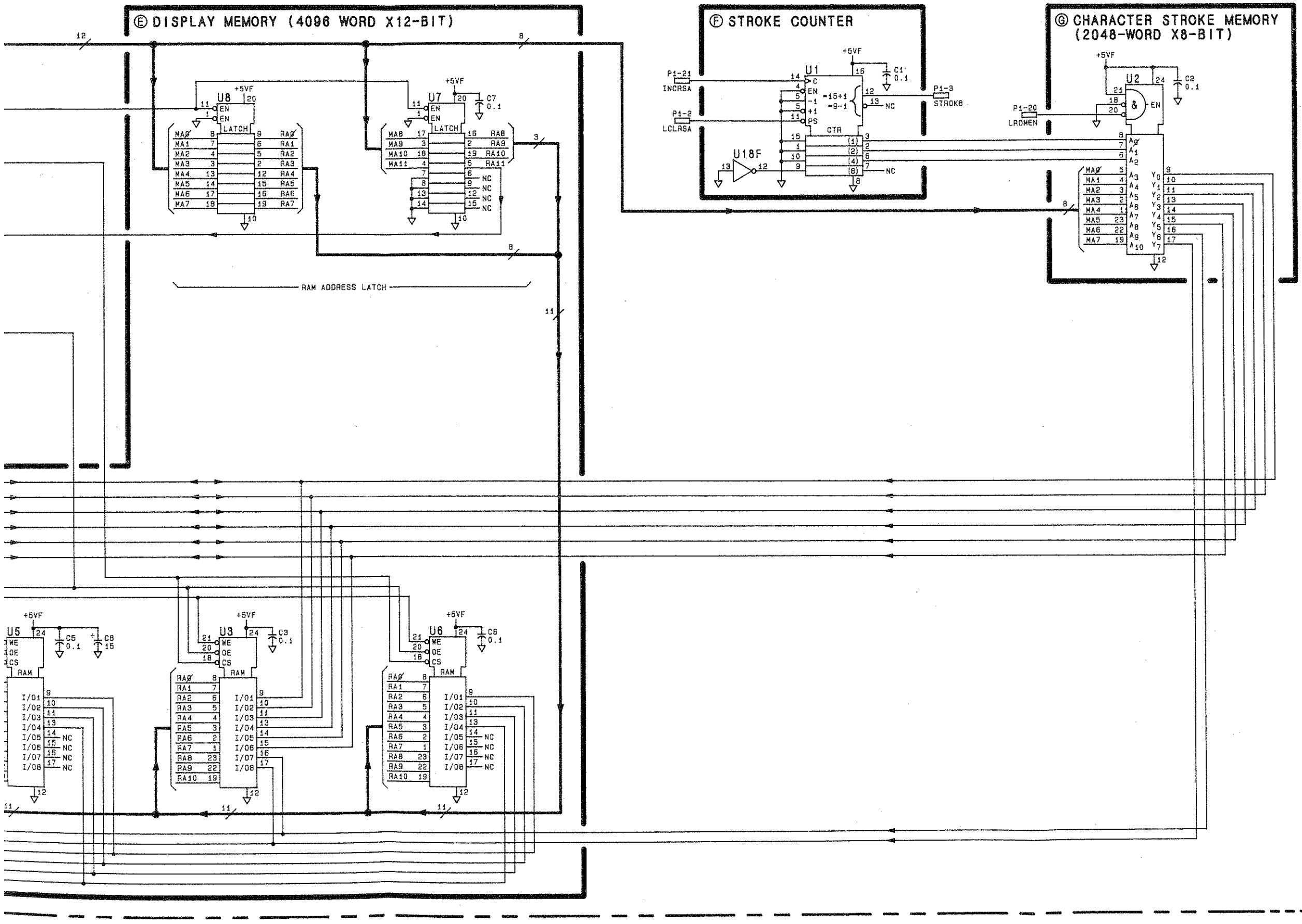

NOTES:

1. REFERENCE DESIGNATORS WITHIN THIS ASSEMBLY ARE ABBREVIATED. FOR COMPLETE REFERENCE DESIGNATION, PREFIX ABBREVIATION WITH ASSEMBLY DESIGNATION.
2. UNLESS OTHERWISE INDICATED:
   RESISTANCE IS IN OHMS (Ω)
   CAPACITANCE IS IN MICROFARADS (μF)
   INDUCTANCE IS IN MICROHENRIES (μH)
3. MNEMONIC TABLE:

MNEMONIC	DESCRIPTION
LDMAR	LOAD MEMORY ADDRESS REG.
LMEMEN	LOW=MEMORY ENABLE
LWRITE	LOW=WRITE IN MEMORY
LDMDR	LOAD MEMORY DATA REG.
LCLRSA	LOW=CLEAR STROKE ADDRESS
INCRSA	INCREMENT STROKE ADDRESS
STROKB	EIGHT CHARACTER STROKE
LROMEN	LOW=ROM ENABLE
DGND	DIGITAL GROUND
CE	CHIP ENABLE
LOINEN	LOW=RAM DATA INPUT ENABLE (WRITE)
LRAMADDR EN	LOW=RAM ADDRESS ENABLE
LOE	LOW=RAM OUTPUT ENABLE (READ)
LWE	LOW=RAM WRITE ENABLE (WRITE)
LCE1	LOW=RAM CHIP ENABLE 2 (ADDR 0000-2047, U4 & U5)
LCE2	LOW=RAM CHIP ENABLE 2 (ADDR 2048-4095, U3 & U6)

4. UNLESS OTHERWISE INDICATED LOGIC LEVELS ARE TTL:
   +2.0V TO +5.0V=LOGIC '1' =HIGH
   0V TO +0.8V=LOGIC '0' =LOW
5. UNLESS OTHERWISE INDICATED:
   SIGNALS ENTER AT LEFT SIDE AND EXIT AT RIGHT SIDE OF FUNCTION BLOCKS.

A3A4

FIGURE 4. A3A4 MEMORY, SCHEMATIC DIAGRAM

A3A5 DATA MANIPULATOR, CIRCUIT DESCRIPTION

A3A5 Data Manipulator contains 16 random-access memory (RAM) registers and 32 read-only memory (ROM) registers, an accumulator, and an arithmetic logic unit (ALU). This assembly provides all data functions and transfers for digital storage.

Register RAM (B)

U13, U15, and U17 form the 16 12-bit RAM registers used for data storage during data manipulation.

Constant ROM (F)

U1 and U18 form the 16 12-bit ROM registers used as constants for data storage during data manipulation.

Accumulator (D)

U7 and U9 form the 12-bit Accumulator, which receives and holds all results of ALU operations.

Buffer (C)

U5 and U11 are three-state data buffers that allow the Accumulator data to be transferred to the Source Bus.

Arithmetic Logic Unit (ALU) (E)

U2, U3, and U4 are the main Arithmetic Logic Unit (ALU). U16 provides high-speed carry look-ahead. U14 decodes ALU outputs to determine whether a zero-value result has been generated.

Pipeline Register (G)

U12 and U24 form an instruction Pipeline Register for data manipulation instructions.

Control Decoder (H)

U19 through U23 decode data manipulation instructions into the necessary control lines.

Multiplexer/Bus Driver (A)

U6, U8, and U10 form a 12-bit Bus Driver with two data inputs. Data from the RAM Bus or from the Accumulator Bus may be transferred to the main Digital Storage Bus through these drivers.

A3A5 DATA MANIPULATOR, TROUBLESHOOTING

SA Diagram 3 is used to verify proper operation of A3A5 Data Manipulator. The first check uses Test Program 2, with the qualifier feedback disabled, to verify the qualifier select circuitry on A3A7. The next check uses Test Program 3 to check the Data Manipulator Bus output at the connector and the LZERO output at U14 pin 9. (Since Test Program 3 is the first program to use the qualifier and the normal interrupt, the INTR line from A3A2 to A3A6U16 pin 10 and the buffered qualifier A3A6U27 might have to be checked, if the proper 5 Vdc signature is not obtained. The INTR line should be a 50-kHz signal.) If any signatures are incorrect in these two checks on SA Diagram 3, then SA Diagrams 1 and 2 must be checked first. If tests on diagrams 1 and 2 check correctly, then the fault can be properly traced back using Diagram 3. The last check on this diagram verifies the U5 and U11 buffers. On all previous checks, they have not been enabled, so that the Source bus was always the Constant ROM output. Test Program 5, though, enables U5 and U11 so they can be checked. This also checks that the Constant ROM outputs can be disabled.

SA Diagram 1 uses Test Program 1 to check the Accumulator, Control Decode logic, Pipeline Registers, and parts of the ALU, Constant ROM, and the Multiplexer Bus Driver. The Register RAM outputs are disabled by A3A5TP2 being grounded; thus, they should be high. This eliminates the feedback from the data bus back into the A3A5 Data Manipulator.

Troubleshooting the Digital Storage Bus

If a Multiplexer Bus Driver on A3A5 has an incorrect output but all its inputs are good, the multiplexer may be defective or there may be another bad driver/load on that data bit. To help isolate this problem, A3A2, A3A4, and A3A8 can be removed and the test program on Diagram 1 run. If neither removing the boards nor replacing the multiplexer solves the problem, additional probing with a scope, current tracer, or ohmmeter may be required to further isolate the bad node.

SA Diagram 2 uses Test Program 2, which is the same as Test Program 1 except that the Register RAMs are enabled. This feedback path means that a low-order bit failure can make higher-order bits appear bad. Therefore, it is best to probe beginning with bit Ø and then working up. This is the purpose of the red arrows on U2, U3, and U4. If a register RAM output appears incorrect, it may be due to either the RAM being defective, or the ALU input being faulty. To check this, the table on the diagram should be used. Grounding A3A5TP2 disables the RAM outputs, and the ALU input is verified by manually grounding the RAM output. The signature at U9 pin 10 should change to the one shown in the table. If it does, the ALU is probably all right; the fault is in the Register RAM.

TABLE 1. A3A5, REPLACEABLE PARTS (1 OF 2)

Reference Designation	HP Part Number	C D	Qty	Description	Mfr Code	Mfr Part Number
A3A5	85662-60145	4	1	BOARD ASSEMBLY, DATA MANIPULATOR	28480	85662-60145
A3A5C1	0160-4835	7	25	CAPACITOR-FXD .1UF +-10% 50VDC CER	28480	0160-4835
A3A5C2	0160-4835	7		CAPACITOR-FXD .1UF +-10% 50VDC CER	28480	0160-4835
A3A5C3	0160-4835	7		CAPACITOR-FXD .1UF +-10% 50VDC CER	28480	0160-4835
A3A5C4	0160-4835	7		CAPACITOR-FXD .1UF +-10% 50VDC CER	28480	0160-4835
A3A5C5	0160-4835	7		CAPACITOR-FXD .1UF +-10% 50VDC CER	28480	0160-4835
A3A5C6	0160-4835	7		CAPACITOR-FXD .1UF +-10% 50VDC CER	28480	0160-4835
A3A5C7	0160-4835	7		CAPACITOR-FXD .1UF +-10% 50VDC CER	28480	0160-4835
A3A5C8	0160-4835	7		CAPACITOR-FXD .1UF +-10% 50VDC CER	28480	0160-4835
A3A5C9	0160-4835	7		CAPACITOR-FXD .1UF +-10% 50VDC CER	28480	0160-4835
A3A5C10	0160-4835	7		CAPACITOR-FXD .1UF +-10% 50VDC CER	28480	0160-4835
A3A5C11	0160-4835	7		CAPACITOR-FXD .1UF +-10% 50VDC CER	28480	0160-4835
A3A5C12	0160-4835	7		CAPACITOR-FXD .1UF +-10% 50VDC CER	28480	0160-4835
A3A5C13	0160-4835	7		CAPACITOR-FXD .1UF +-10% 50VDC CER	28480	0160-4835
A3A5C14	0160-4835	7		CAPACITOR-FXD .1UF +-10% 50VDC CER	28480	0160-4835
A3A5C15	0160-4835	7		CAPACITOR-FXD .1UF +-10% 50VDC CER	28480	0160-4835
A3A5C16	0160-4835	7		CAPACITOR-FXD .1UF +-10% 50VDC CER	28480	0160-4835
A3A5C17	0160-4835	7		CAPACITOR-FXD .1UF +-10% 50VDC CER	28480	0160-4835
A3A5C18	0160-4835	7		CAPACITOR-FXD .1UF +-10% 50VDC CER	28480	0160-4835
A3A5C19	0160-4835	7		CAPACITOR-FXD .1UF +-10% 50VDC CER	28480	0160-4835
A3A5C20	0160-4835	7		CAPACITOR-FXD .1UF +-10% 50VDC CER	28480	0160-4835
A3A5C21	0160-4835	7		CAPACITOR-FXD .1UF +-10% 50VDC CER	28480	0160-4835
A3A5C22	0160-4835	7		CAPACITOR-FXD .1UF +-10% 50VDC CER	28480	0160-4835
A3A5C23	0160-4835	7		CAPACITOR-FXD .1UF +-10% 50VDC CER	28480	0160-4835
A3A5C24	0160-4835	7		CAPACITOR-FXD .1UF +-10% 50VDC CER	28480	0160-4835
A3A5C25	0160-4835	7		CAPACITOR-FXD .1UF +-10% 50VDC CER	28480	0160-4835
A3A5C26	0180-0228	6	2	CAPACITOR-FXD 22UF+-10% 15VDC TA	56289	150D226X9015B2
A3A5C27	0180-0228	6		CAPACITOR-FXD 22UF+-10% 15VDC TA	56289	150D226X9015B2
A3A5C28	0160-4832	4	3	CAPACITOR-FXD .01UF +-10% 100VDC CER	28480	0160-4832
A3A5C29	0160-4832	4		CAPACITOR-FXD .01UF +-10% 100VDC CER	28480	0160-4832
A3A5C30	0160-4832	4		CAPACITOR-FXD .01UF +-10% 100VDC CER	28480	0160-4832
A3A5L1	08558-80011	6	1	FILTER COIL BLUE	28480	08558-80011
A3A5R1	0698-3155	1	15	RESISTOR 4.64K 1% .125W F TC=0+-100	24546	C4-1/8-T0-4641-F
A3A5R2	0698-3155	1		RESISTOR 4.64K 1% .125W F TC=0+-100	24546	C4-1/8-T0-4641-F
A3A5R3	0698-3155	1		RESISTOR 4.64K 1% .125W F TC=0+-100	24546	C4-1/8-T0-4641-F
A3A5R4	0698-3155	1		RESISTOR 4.64K 1% .125W F TC=0+-100	24546	C4-1/8-T0-4641-F
A3A5R5	0698-3155	1		RESISTOR 4.64K 1% .125W F TC=0+-100	24546	C4-1/8-T0-4641-F
A3A5R6	0698-3155	1		RESISTOR 4.64K 1% .125W F TC=0+-100	24546	C4-1/8-T0-4641-F
A3A5R7	0698-3155	1		RESISTOR 4.64K 1% .125W F TC=0+-100	24546	C4-1/8-T0-4641-F
A3A5R8	0698-3155	1		RESISTOR 4.64K 1% .125W F TC=0+-100	24546	C4-1/8-T0-4641-F
A3A5R9	0698-3155	1		RESISTOR 4.64K 1% .125W F TC=0+-100	24546	C4-1/8-T0-4641-F
A3A5R10	0698-3155	1		RESISTOR 4.64K 1% .125W F TC=0+-100	24546	C4-1/8-T0-4641-F
A3A5R11	0698-3155	1		RESISTOR 4.64K 1% .125W F TC=0+-100	24546	C4-1/8-T0-4641-F
A3A5R12	0698-3155	1		RESISTOR 4.64K 1% .125W F TC=0+-100	24546	C4-1/8-T0-4641-F
A3A5R13	0698-3155	1		RESISTOR 4.64K 1% .125W F TC=0+-100	24546	C4-1/8-T0-4641-F
A3A5R14	0698-3155	1		RESISTOR 4.64K 1% .125W F TC=0+-100	24546	C4-1/8-T0-4641-F
A3A5R15	0698-3132	4	2	RESISTOR 261 1% .125W F TC=0+-100	24546	C4-1/8-T0-2610-F
A3A5R16	0698-3132	4		RESISTOR 261 1% .125W F TC=0+-100	24546	C4-1/8-T0-2610-F
A3A5R17	0698-3155	1		RESISTOR 4.64K 1% .125W F TC=0+-100	24546	C4-1/8-T0-4641-F
A3A5TP1	0360-0535	0	4	TERMINAL TEST POINT PCB	00000	ORDER BY DESCRIPTION
A3A5TP2	0360-0535	0		TERMINAL TEST POINT PCB	00000	ORDER BY DESCRIPTION
A3A5TP3	0360-0535	0		TERMINAL TEST POINT PCB	00000	ORDER BY DESCRIPTION
A3A5TP4	0360-0535	0		TERMINAL TEST POINT PCB	00000	ORDER BY DESCRIPTION
A3A5U1	85662-80015	9	1	IC ROM 512X8 U1	28480	85662-80015
A3A5U2	1820-1974	0	3	IC ARITH-LGC-UN TTL S	01295	SN74S181J
A3A5U3	1820-1974	0		IC ARITH-LGC-UN TTL S	01295	SN74S181J
A3A5U4	1820-1974	0		IC ARITH-LGC-UN TTL S	01295	SN74S181J
A3A5U5	1820-1491	6	2	IC BFR TTL LS NON-INV HEX 1-INP	01295	SN74LS367AN
A3A5U6	1820-1439	2	3	IC MUXR/DATA-SEL TTL LS 2-TO-1-LINE	01295	SN74LS258AN
A3A5U7	1820-1196	8	2	IC FF TTL LS D-TYPE POS-EDGE-TRIG COM	01295	SN74LS174N
A3A5U8	1820-1439	2		IC MUXR/DATA-SEL TTL LS 2-TO-1-LINE	01295	SN74LS258AN
A3A5U9	1820-1196	8		IC FF TTL LS D-TYPE POS-EDGE-TRIG COM	01295	SN74LS174N
A3A5U10	1820-1439	2		IC MUXR/DATA-SEL TTL LS 2-TO-1-LINE	01295	SN74LS258AN
A3A5U11	1820-1491	6		IC BFR TTL LS NON-INV HEX 1-INP	01295	SN74LS367AN
A3A5U12	1820-1076	3	1	IC FF TTL S D-TYPE POS-EDGE-TRIG CLEAR	01295	SN74S174N
A3A5U13	1816-0724	7	3	IC TTL S 64-BIT STAT RAM 35-NS 3-S	01295	SN74S189N
A3A5U14	1820-1138	0	1	IC GATE TTL S NAND 13-INP	01295	SN74S133N
A3A5U15	1816-0724	7		IC TTL S 64-BIT STAT RAM 35-NS 3-S	01295	SN74S189N
A3A5U16	1820-1305	1	1	IC GEN TTL S LOOK-AHD-CRY	01295	SN74S182N
A3A5U17	1816-0724	7		IC TTL S 64-BIT STAT RAM 35-NS 3-S	01295	SN74S189N
A3A5U18	85662-80016	0	1	IC ROM 512X8 U18	28480	85662-80016
A3A5U19	1820-0681	4	1	IC GATE TTL S NAND QUAD 2-INP	01295	SN74S00N
A3A5U20	1820-0685	8	1	IC GATE TTL S NAND TPL 3-INP	01295	SN74S10N

TABLE 1. A3A5, REPLACEABLE PARTS (2 OF 2)

Reference Designation	HP Part Number	C D	Qty	Description	Mfr Code	Mfr Part Number
A3A5U21	1820-1202	7	1	IC GATE TTL LS NAND TPL 3-INP	01295	SN74LS10N
A3A5U22	1820-1197	9	1	IC GATE TTL LS NAND QUAD 2-INP	01295	SN74LS00N
A3A5U23	1820-1287	0	1	IC BFR TTL LS NAND QUAD 2-INP	01295	SN74LS37N
A3A5U24	1820-1195	7	1	IC FF TTL LS D-TYPE POS-EDGE-TRIG COM	01295	SN74LS175N
				MISCELLANEOUS PARTS		
	4040-0753	0	2	EXTR PC BD GRN	28480	4040-0753

A3A5
DATA MANIPULATOR
85662-60145

NOTE

- FOR INSTRUCTIONS ON THE USE OF SIGNATURE ANALYSIS DIAGRAMS READ THE SIGNATURE ANALYSIS DESCRIPTION SECTION OF THIS MANUAL.

DATA MANIPULATOR CHECK 1

SPECTRUM ANALYZER CONNECTIONS:
GROUND A3A5TP2 TO A3A5TP1. GROUND A3A6TP7 AND A3A6TP8 TO A3A6TP1.
ADJUST INTENSITY FULLY CCW.

SIGNATURE ANALYZER CONNECTIONS:
CLOCK TO A3A7TP7 (LCLK)
START TO A3A6TP2
STOP TO A3A6TP2
POD GND TO A3A6TP1
PROBE GND TO A3A5TP1

PRESS:
PRESS A3A7S1 AFTER COMPLETING CONNECTIONS FOR EACH TEST OR CHECK.

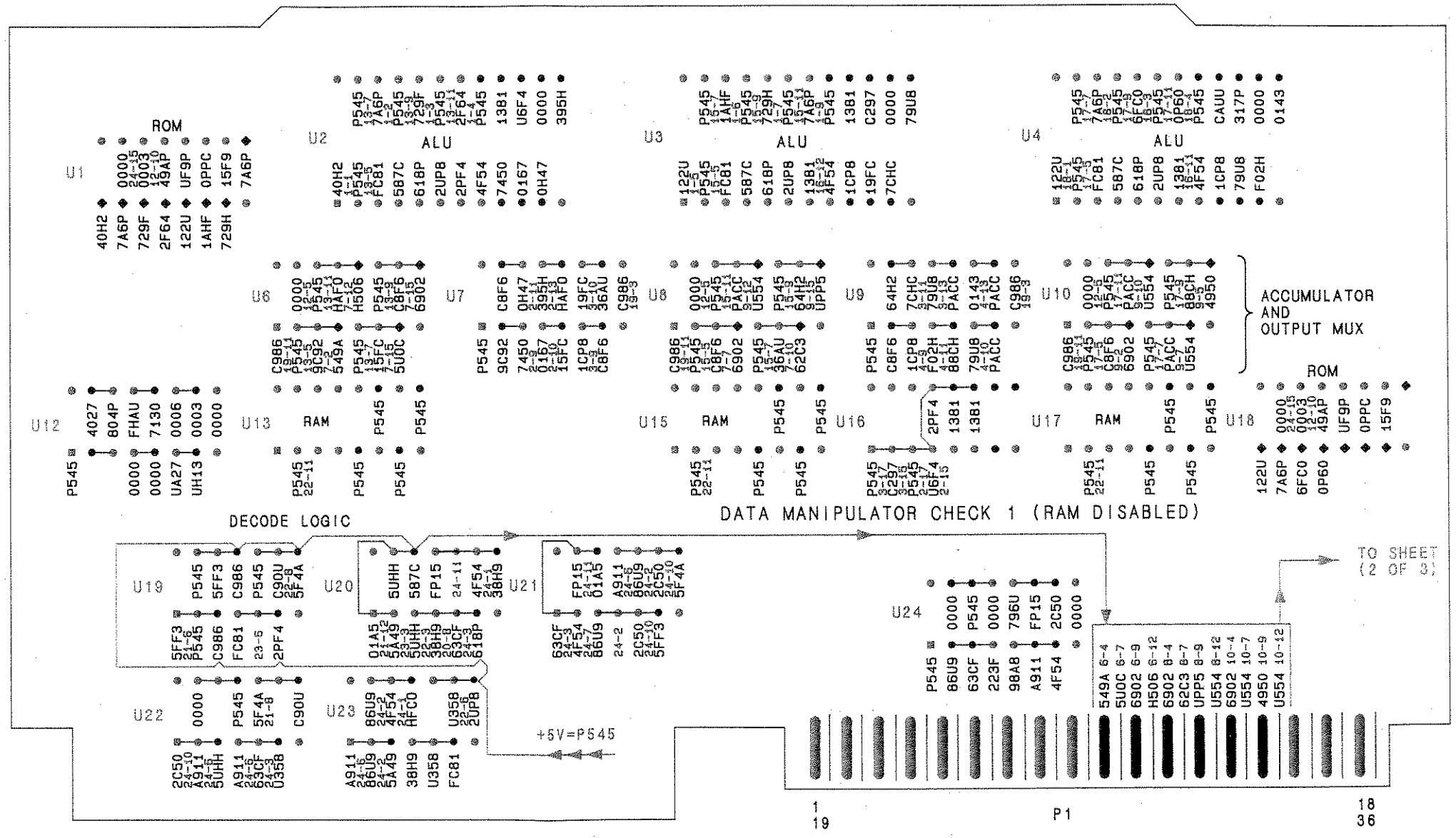

A3A5

FIGURE 1. A3A5 DATA MANIPULATOR, SIGNATURE ANALYSIS TROUBLESHOOTING DIAGRAM (1 OF 3)

NOTE

INSTRUCTIONS ON THE USE OF SIGNATURE ANALYSIS DIAGRAMS
THE SIGNATURE ANALYSIS DESCRIPTION SECTION OF THIS MANUAL.

MANIPULATOR CHECK 2

M ANALYZER CONNECTIONS:
A3A6TP7 AND A3A6TP8 TO A3A6TP1
A3A6TP3 TO A3A6TP6

RE ANALYZER CONNECTIONS:
\ TO A3A5TP4
\ TO A3A6TP2
– TO A3A6TP2
) TO A3A6TP1
GND TO A3A5TP1

AFTER COMPLETING CONNECTIONS FOR EACH TEST OR CHECK

A3A5
DATA MANIPULATOR
85662-60145

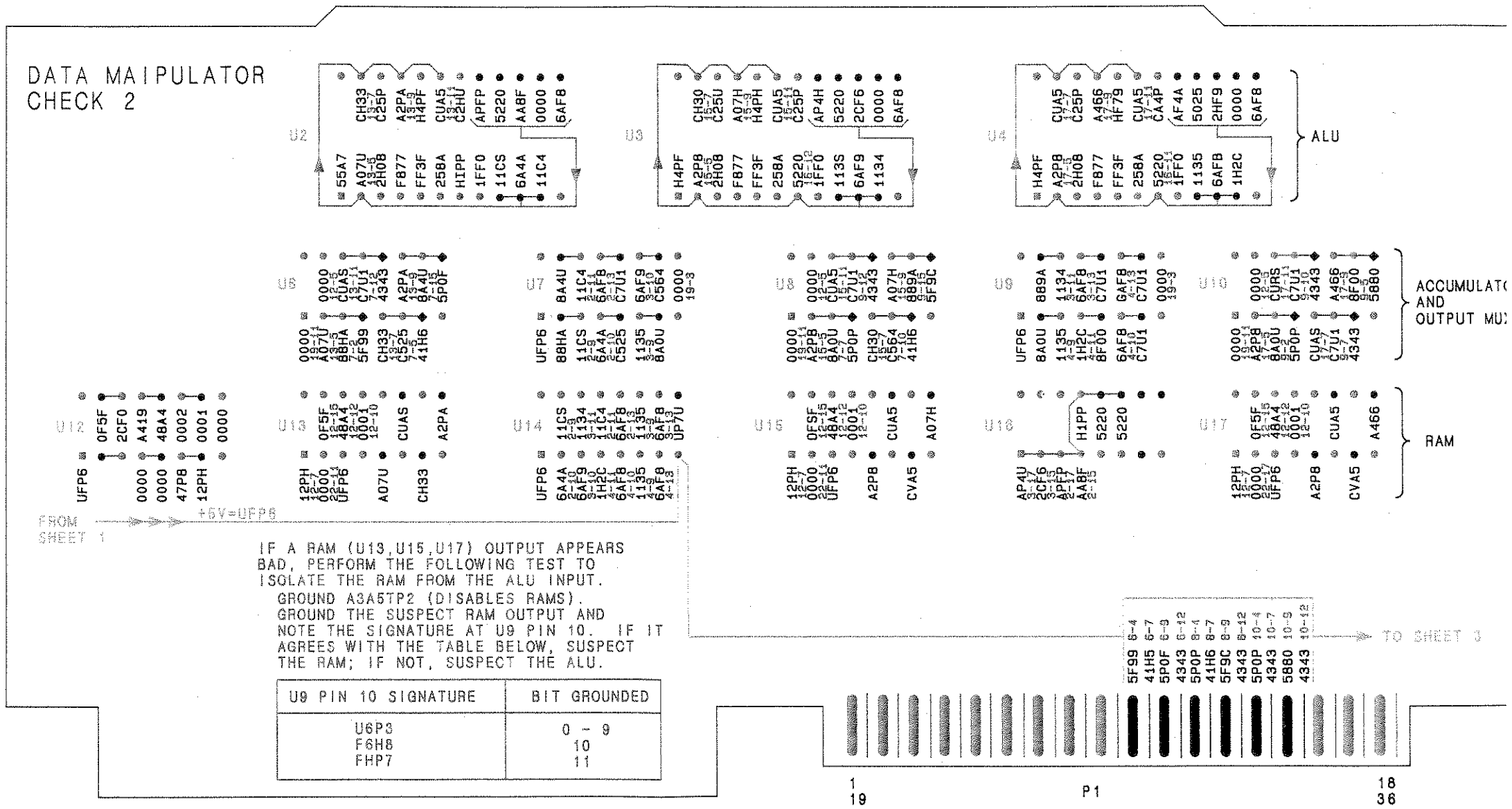

FIGURE 1. A3A5 DATA MANIPULATOR, SIGNATURE ANALYSIS TROUBLESHOOTING DIAGRAM (2 OF

NOTE

- FOR INSTRUCTIONS ON THE USE OF SIGNATURE ANALYSIS DIAGRAMS READ THE SIGNATURE ANALYSIS DESCRIPTION SECTION OF THIS MANUAL.

DATA MANIPULATOR CHECK 3

SPECTRUM ANALYZER CONNECTIONS:
JUMPER A3A6TP3 TO A3A6TP6
GROUND A3A6TP7 AND A3A6TP8 TO A3A6TP1
ADJUST INTENSITY FULLY CCW

SIGNATURE ANALYZER CONNECTIONS:
CLOCK ⎍ TO A3A7TP7 (LCLK)
START ⎍ TO AEA6TP2
STOP ⎍ TO A3A6TP2
POD GND TO A3A6TP1
PROBE GND TO A3A5TP1

PRESS:
A3A7S1 AFTER COMPLETING CONNECTIONS FOR EACH TEST OR CHECK

DATA MANIPULATOR CHECK 4

SPECTRUM ANALYZER CONNECTIONS:
ADJUST A3A2R12LL THRESH FULLY CW
GROUND A3A7TP6 TO A3A7TP5
JUMPER A3A6TP3 TO A3A6TP6

SIGNATURE ANALYZER CONNECTIONS:
CLOCK ⎍ TO A3A7TP7 (LCLK)
START ⎍ TO A3A6TP2
STOP ⎍ TO A3A6TP2
POD GND TO A3A6TP1
PROBE GND TO A3A5TP1

PRESS:
A3A7S1 AFTER COMPLETING CONNECTIONS FOR EACH TEST OR CHECK

DATA MANIPULATOR CHE

SPECTRUM ANALYZER CONNECTI
GROUND A3A7TP6 TO A3A7TP5
JUMPER A3A6TP3 TO A3A6TP6

SIGNATURE ANALYZER CONNECT
CLOCK ⎍ TO A3A5TP4 (LOAD)
START ⎍ TO A3A6TP2
STOP ⎍ TO A3A6TP2
POD GND TO A3A5TP1
PROBE GND A3A5TP1

PRESS:
A3A7S1 AFTER COMPLETING CONNEC

DATA MANIPULATOR CHE

SPECTRUM ANALYZER CONNECTI
ADJUST A3A2R12LL THRESH FULLY
GROUND A3A7TP4 TO A3A7TP6
JUMPER A3A6TP3 TO A3A6TP6

SIGNATURE ANALYZER CONNECT
CLOCK ⎍ TO A3A5TP4 (LOAD)
START ⎍ TO A3A6TP2
STOP ⎍ TO A3A6TP2
POD GND TO A3A6TP1
PROBE GND TO A3A5TP1

PRESS:
A3A7S1 AFTER COMPLETING CONNEC

E

IGNATURE ANALYSIS DIAGRAMS
RIPTION SECTION OF THIS MANUAL.

DATA MANIPULATOR CHECK 5

SPECTRUM ANALYZER CONNECTIONS:
GROUND A3A7TP6 TO A3A7TP5
JUMPER A3A6TP3 TO A3A6TP6

SIGNATURE ANALYZER CONNECTIONS:
CLOCK ⎍ TO A3A5TP4 (LOAD)
START ⎍ TO A3A6TP2
STOP ⎍ TO A3A6TP2
POD GND TO A3A5TP1
PROBE GND A3A5TP1

PRESS:
A3A7S1 AFTER COMPLETING CONNECTIONS FOR EACH TEST OR CHECK

DATA MANIPULATOR CHECK 4

SPECTRUM ANALYZER CONNECTIONS:
ADJUST A3A2R12LL THRESH FULLY CW
GROUND A3A7TP4 TO A3A7TP6
JUMPER A3A6TP3 TO A3A6TP6

SIGNATURE ANALYZER CONNECTIONS:
CLOCK ⎍ TO A3A5TP4 (LOAD)
START ⎍ TO A3A6TP2
STOP ⎍ TO A3A6TP2
POD GND TO A3A6TP1
PROBE GND TO A3A5TP1

PRESS:
A3A7S1 AFTER COMPLETING CONNECTIONS FOR EACH TEST OR CHECK

A3A5
DATA MANIPULATOR
85662-60145

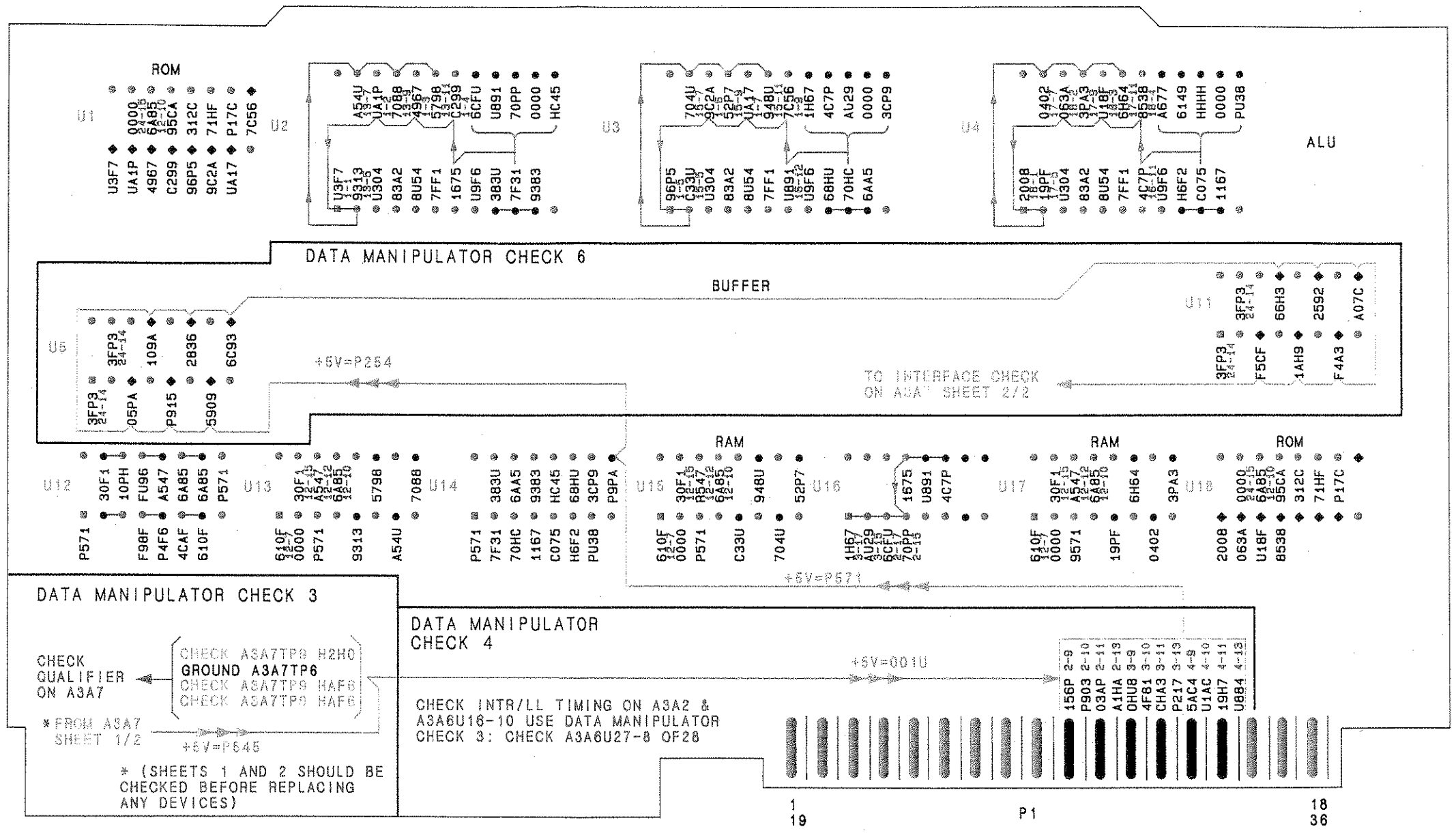

A3A5

FIGURE 1. A3A5 DATA MANIPULATOR, SIGNATURE ANALYSIS TROUBLESHOOTING DIAGRAM (3 OF 3)

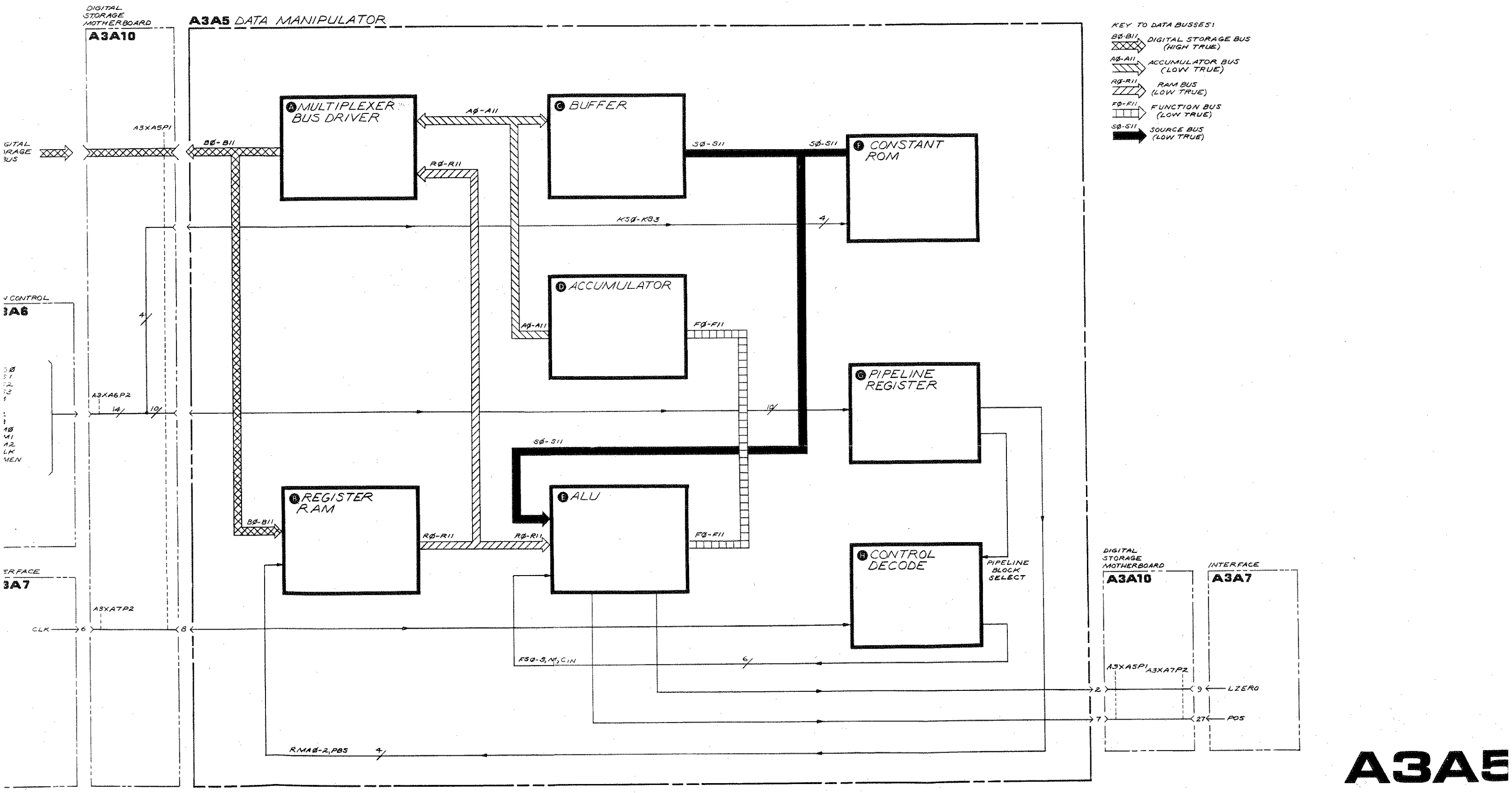

FIGURE 2. A3A5 DATA MANIPULATOR, BLOCK DIAGRA

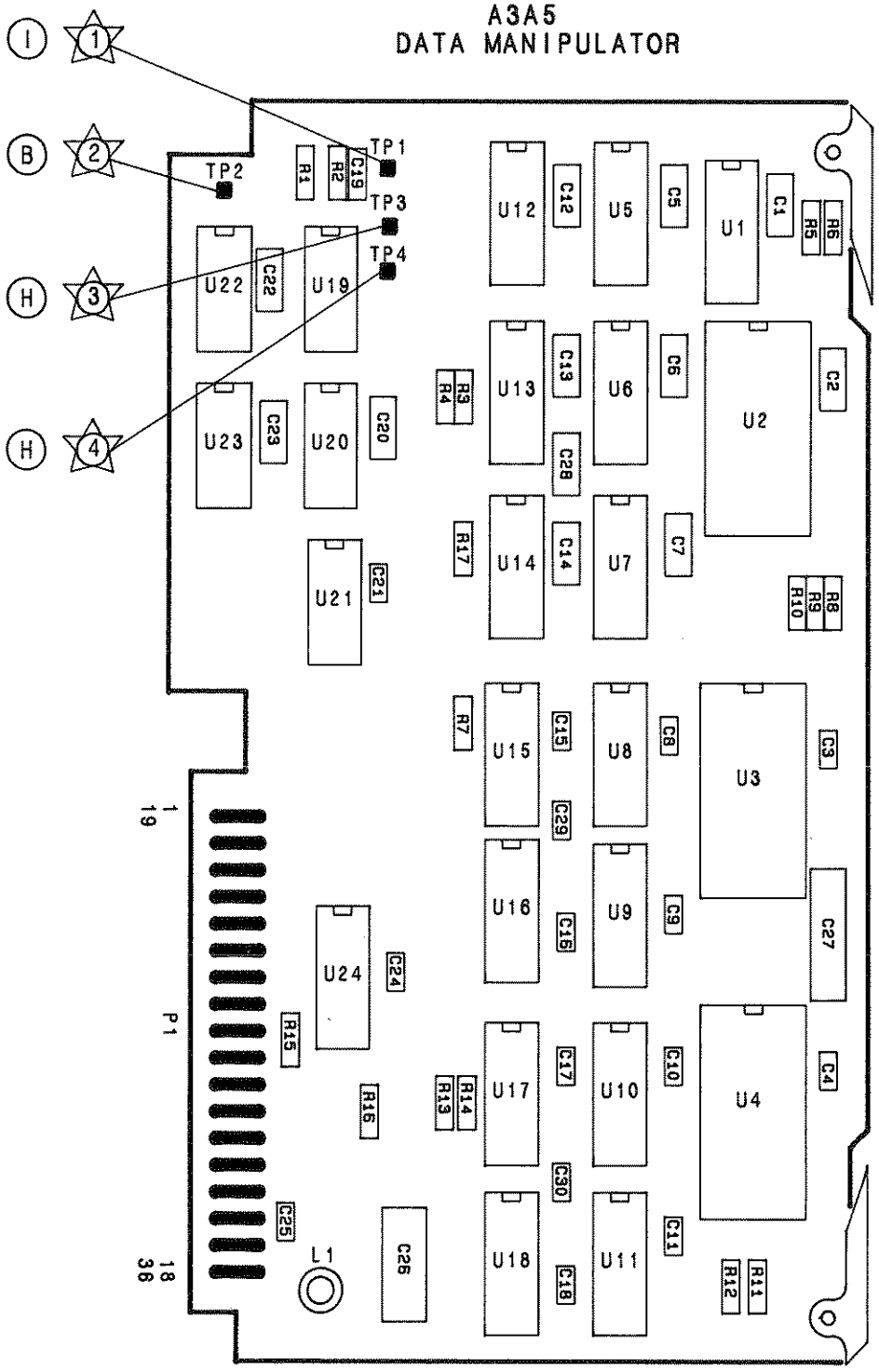

FIGURE 3. A3A5 DATA MANIPULATOR, COMPONENT LOCATIONS

A3A5 DATA MANIPULATOR
85662-60145

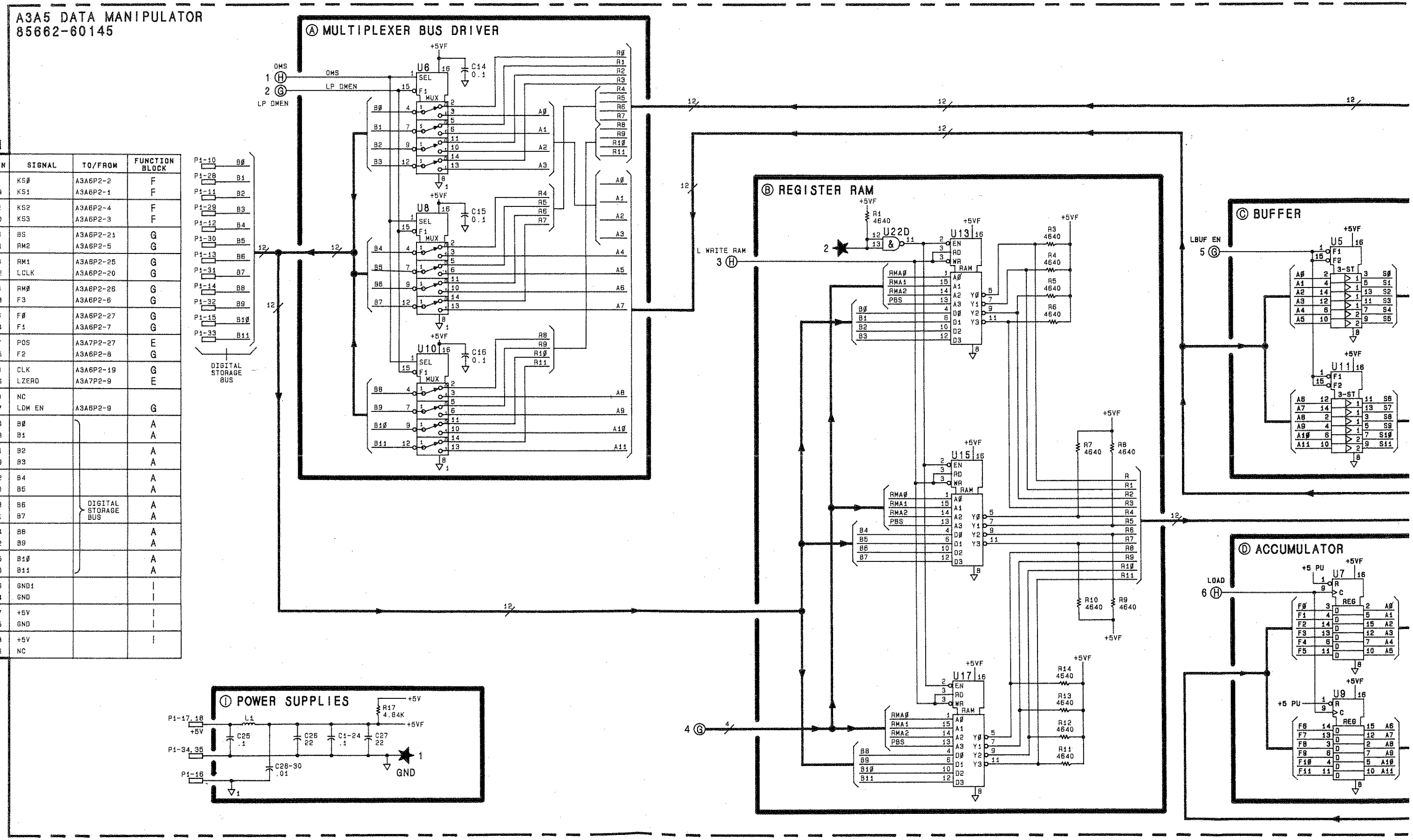

P1

PIN	SIGNAL	TO/FROM	FUNCTION BLOCK
1	KSØ	A3A6P2-2	F
19	KS1	A3A6P2-1	F
2	KS2	A3A6P2-4	F
20	KS3	A3A6P2-3	F
3	BS	A3A6P2-21	G
21	RM2	A3A6P2-5	G
4	RM1	A3A6P2-25	G
22	LCLK	A3A6P2-20	G
5	RMØ	A3A6P2-26	G
23	F3	A3A6P2-6	G
6	FØ	A3A6P2-27	G
24	F1	A3A6P2-7	G
7	POS	A3A7P2-27	E
25	F2	A3A6P2-8	G
8	CLK	A3A6P2-19	G
26	LZERO	A3A7P2-9	E
9	NC		
27	LDM EN	A3A6P2-9	G
10	BØ	DIGITAL STORAGE BUS	A
28	B1		A
11	B2		A
29	B3		A
12	B4		A
30	B5		A
13	B6		A
31	B7		A
14	B8		A
32	B9		A
15	B1Ø		A
33	B11		A
16	GND1		I
34	GND		I
17	+5V		I
35	GND		I
18	+5V		I
36	NC		

SERIAL PREFIX: 2403A

NOTES:

1. REFERENCE DESIGNATORS WITHIN THIS ASSEMBLY ARE ABBREVIATED. FOR COMPLETE REFERENCE DESIGNATION, PREFIX ABBREVIATION WITH ASSEMBLY DESIGNATION.

2. UNLESS OTHERWISE INDICATED:
RESISTANCE IS IN OHMS (Ω)
CAPACITANCE IS IN MICROFARADS (μF)
INDUCTANCE IS IN MICROHENRIES (μH)

3. MNEMONIC TABLE:

MNEMONIC	DESCRIPTION
KSØ-KS3	CONSTANT SELECTION BITS Ø-3
BS	BLOCK SWITCH CONTROL
RMØ-RM2	RAM REGISTER SELECT 0 THROUGH 3
LCLK	INVERTED CLOCK
FØ-F3	FUNCTION BITS Ø THROUGH 3
POS	SIGN OF ALU RESULTS
LZERO	OUTPUT OF ZERO CHECK ON ALU RESULTS (LOW=TRUE)
LOMEN	DATA MANIPULATOR OUTPUT ENABLE (LOW=TRUE)
CLK	8MHz SYSTEM CLOCK
BØ-B11	DIGITAL STORAGE BUS DATA BITS Ø THROUGH 11

4. CONTROL DECODE

INPUTS FUNCTION	F CODE F2	F1	FØ	OUTPUTS M	FUNCTION SELECT FS3	FS2	FS1	FSØ	CIN	L WRITE RAM	LOAD	OMS
A+B→ACC	0	0	0	0	1	0	0	1	0	0	1	0
A-B→ACC	0	0	1	0	0	1	1	0	1	0	1	0
AAB→ACC	0	1	0	0	1	1	1	0	X	0	1	0
AVB→ACC	0	1	0	X	1	0	1	1	0	0	1	0
A→ACC	1	0	1	X	1	1	1	1	0	0	1	0
BUS→A	1	0	1	X	X	X	X	X	X	1	0	1
LA→ACC	1	1	0	1	0	0	0	0	X	0	1	0
ACC→BUS	1	1	1	X	X	X	X	X	X	0	0	1

5. UNLESS OTHERWISE INDICATED:
LOGIC LEVELS ARE TTL:
+2.0V TO +5.0V=LOGIC "1" =HIGH
0V TO +0.8V=LOGIC "0" =LOW

6. UNLESS OTHERWISE INDICATED:
SIGNALS ENTER AT LEFT SIDE OR TOP AND EXIT AT RIGHT SIDE OR BOTTOM OF FUNCTION BLOCKS.

A3A5

FIGURE 4. A3A5 DATA MANIPULATOR, SCHEMATIC DIAGRAM

A3A6 MAIN CONTROL, CIRCUIT DESCRIPTION

The Digital Storage Processor is controlled by an algorithmic state machine, which uses relative-state addressing and interrupt linkage in performing the control algorithm. The Digital Storage Processor includes A3A4 Memory, A3A5 Data Manipulator, A3A6 Main Control, and A3A7 Interface.

State Register (D)

The State Register, U13 and U14, contains the present state of the algorithm. The present state data is supplied to the Program ROM (Read-Only Memory), where it is decoded into control functions.

Branch Length Adder (A)

The Branch Length Adder, U1 and U2, receives branch length data from the Program ROM and adds it to the present state data to generate the next state.

Link Register (C)

The Link Register, U12 and U15, holds the suspended state of the main program during interrupts and holds the next interrupt state during the main program.

In effect the Link Register acts as a "bookmark" for both the main program and the interrupt program, so that either program can resume at the correct state.

State Machine Control (F)

The State Machine Control, U16, U17, U18, U27C, and U27D, manages switching between the main and interrupt programs. In addition, it generates a signal to increment the Branch Length Adder for conditional branching.

Program ROM (B)

The Program ROM, U4, U6, U8, and U10, contains both the main program and the interrupt program. U5, U7, U9, and U11 are test firmware used in Signature Analysis.

Pipeline Registers (E) (K)

The Pipeline Registers, U24 and U28, hold instructions from the Program ROM for 125 nsec during execution.

Addressable Flip-Flops (L)

U21 and U23 contain 16 flip-flops that may be individually set and cleared. These flip-flops control signals for the Input Section and CRT Driver Section of A3 Digital Storage. The Input Section includes A3A8 Analog-Digital Converter and A3A9 Track and Hold. The CRT Driver Section includes A3A1 Trigger, A3A2 Intensity Control, and A3A3 Line Generator. The flip-flops also control flags and memory control lines for the Processor Section, which includes A3A4 Memory, A3A5 Data Manipulator, A3A6 Main Control, and A3A7 Interface. U19, U27A, and U27B decode instructions from Pipeline Register U28 to control the 16 flip flops. U29 contains buffers to output flag and timer signals onto the Digital Storage Bus.

Control Pulses (G)

U26 decodes eight control pulses based on the instruction in the Pipeline Register U24. U25A is a flip-flop that is set and cleared by the signals decoded by U26. U26 controls the reset of peak detectors in the Input Section of A3 Digital Storage.

Dual Timer (H)

U20 provides two timing pulses. One, about 20 msec, controls the CRT refresh rate. The other, about 20 μsec, is used in the digital peak detection algorithm.

RAM Chip Enable Generator (J)

U22 generates chip enable timing for A3A4 Memory. It delays execution of program instructions 1½ states (182.5 nsec) to allow addresses to settle.

A3A6 MAIN CONTROL, TROUBLESHOOTING

On SA Diagram 1, the Free Run check is used to test the outputs of the Test ROM flip-flops, pipeline registers and control pulses decoder. The INTR and LQ inputs do not have stable signatures, so a few pins – such as U16 pin 10 – are checked simply for activity. The SA probe light should flash, indicating high and low activity.

The Free Run check is done with A3A6TP8 grounded. This forces U27 pin 11 high and U18 pin 6 low. To verify these components and the U1 adder input, this ground is removed. As soon as a high qualifier comes in, the state register should quit sequencing since the branch length is 0 (– 1 due to all highs from J1, plus 1 due to the qualifier input). This in turn stops the gate light on the Signature Analyzer.

To verify that the branch length adder works, the E1 jumper is replaced, Test Program 2 is set up, and the 5 Vdc signature is checked to see if the program is sequencing properly.

On SA Diagram 2, the Free Run check setup is used to verify the System ROM. The setup is the same as on Diagram 1 except that the Test ROMs are not enabled by the A3A6TP3 to A3A6TP6 jumper.

After A3A5 and A3A7 have been checked, the LTSTA and LTSTB lines are verified by using Test Program 4.

5 Vdc Signature of 4596 is Not Obtained

Verify 8 MHz clocks at P2-19 and P2-20.
Verify a high (low when A3A7S1 is pressed) at LTON P1-13 and U15-5.
Verify a 4 MHz waveform on BS A3A6TP9.

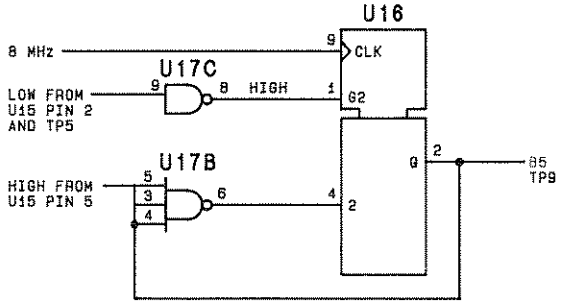

FIGURE 1. EQUIVALENT CIRCUIT OF STATE MACHINE CONTROL

Verify the turn-on states of the register and adder outputs.
When A3A7S1 is pressed:
LTON P1-13 goes low.
U12, U15 outputs go low.
U13, U14 outputs go low.
U1, U2 outputs go high.

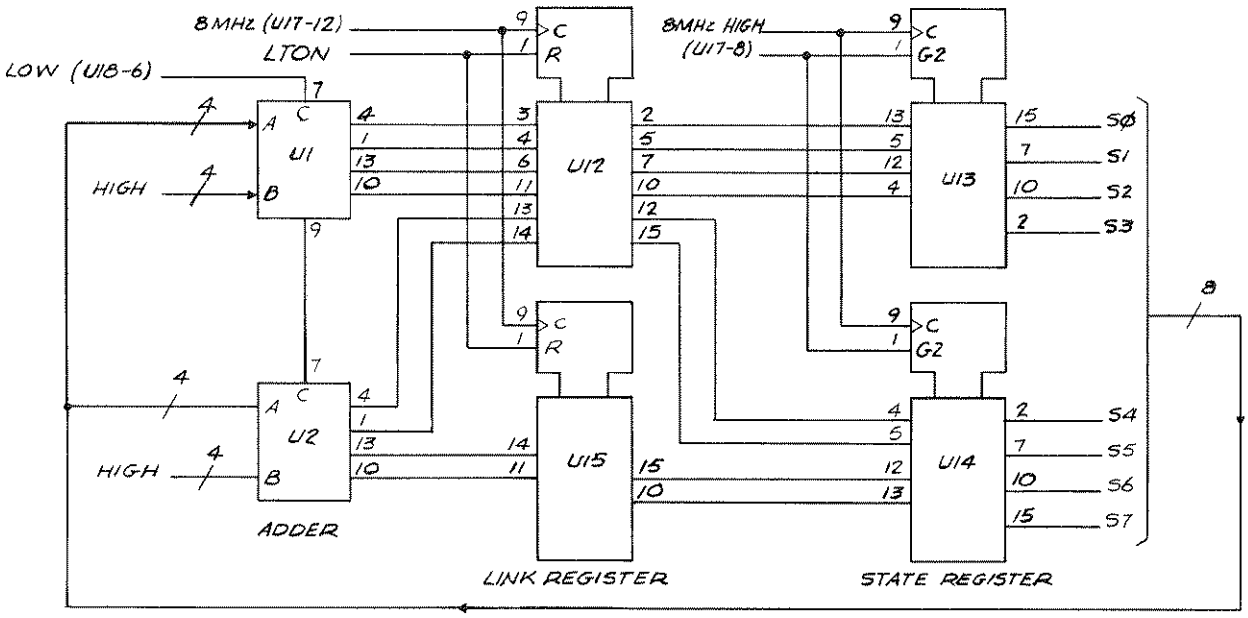

FIGURE 2. EQUIVALENT CIRCUIT OF STATE REGISTER, ADDER, AND LINK REGISTER

Verify binary count sequence, starting at the least significant bit SØ (500 nsec square wave) to S7 (64 μsec square wave). (A signature of 3951 when the Start and Stop are changed to S3 (A3A6TP10) indicates that U1, U13, and U12 pins 2, 5, 7, and 10 are good.)

5 Vdc Signature of P545 Not Obtained

Verify that U18 pin 3 is always high. (A3A6TP7 grounded.)

The reason that the test is not cycling properly is probably due to either the B inputs to the Branch Length Adders U1 and U2 or to the NS (Next State) inputs to the State Register U13 and U14 or U16. To isolate, remove E1 from the IC socket again and ground A3A6TP5 and A6TP8, as at the beginning of the check. (5 Vdc 4596.)

Momentarily ground U17 pin 8 while noting the 5 Vdc signature.

If a 5 Vdc signature of CC34 is not obtained, U13 or U14 is defective. Change the Start and Stop to S3 (A3A6TP10). The 5 Vdc signature should be 3951. Momentarily ground U17 pin 8 again while noting the 5 Vdc signature. A signature of UP73 indicates that U13 is good.

If a 5 Vdc signature of CC34 was obtained, check the adder B inputs U1, U2, pins 2, 6, 15, 11 by individually grounding the inputs. Pressing A3A7S1, and observing on an oscilloscope that the period of S7 (A3A6TP11) decreases. If it does not, then the faulty adder has been located.

TABLE 1. A3A6, REPLACEABLE PARTS (1 OF 2)

Reference Designation	HP Part Number	C D	Qty	Description	Mfr Code	Mfr Part Number
A3A6	85662-60146	5	1	BOARD ASSEMBLY, MAIN CONTROL	28480	85662-60146
A3A6C1	0160-4835	7	28	CAPACITOR-FXD .1UF +-10% 50VDC CER	28480	0160-4835
A3A6C2	0160-4835	7		CAPACITOR-FXD .1UF +-10% 50VDC CER	28480	0160-4835
A3A6C3	0160-4835	7		CAPACITOR-FXD .1UF +-10% 50VDC CER	28480	0160-4835
A3A6C4	0160-4835	7		CAPACITOR-FXD .1UF +-10% 50VDC CER	28480	0160-4835
A3A6C5	0160-4835	7		CAPACITOR-FXD .1UF +-10% 50VDC CER	28480	0160-4835
A3A6C6	0160-4835	7		CAPACITOR-FXD .1UF +-10% 50VDC CER	28480	0160-4835
A3A6C7	0160-4835	7		CAPACITOR-FXD .1UF +-10% 50VDC CER	28480	0160-4835
A3A6C8	0160-4835	7		CAPACITOR-FXD .1UF +-10% 50VDC CER	28480	0160-4835
A3A6C9	0160-4835	7		CAPACITOR-FXD .1UF +-10% 50VDC CER	28480	0160-4835
A3A6C10	0160-4835	7		CAPACITOR-FXD .1UF +-10% 50VDC CER	28480	0160-4835
A3A6C11	0160-4835	7		CAPACITOR-FXD .1UF +-10% 50VDC CER	28480	0160-4835
A3A6C12	0160-4832	4	1	CAPACITOR-FXD .01UF +-10% 100VDC CER	28480	0160-4832
A3A6C13	0180-0197	8	1	CAPACITOR-FXD 2.2UF+-10% 20VDC TA	56289	150D225X9020A2
A3A6C14	0180-0228	6	1	CAPACITOR-FXD 22UF+-10% 15VDC TA	56289	150D226X9015B2
A3A6C15	0160-4835	7		CAPACITOR-FXD .1UF +-10% 50VDC CER	28480	0160-4835
A3A6C16	0160-4835	7		CAPACITOR-FXD .1UF +-10% 50VDC CER	28480	0160-4835
A3A6C17	0160-4835	7		CAPACITOR-FXD .1UF +-10% 50VDC CER	28480	0160-4835
A3A6C18	0160-4835	7		CAPACITOR-FXD .1UF +-10% 50VDC CER	28480	0160-4835
A3A6C19	0160-4835	7		CAPACITOR-FXD .1UF +-10% 50VDC CER	28480	0160-4835
A3A6C20	0160-4835	7		CAPACITOR-FXD .1UF +-10% 50VDC CER	28480	0160-4835
A3A6C21	0160-4835	7		CAPACITOR-FXD .1UF +-10% 50VDC CER	28480	0160-4835
A3A6C22	0160-4835	7		CAPACITOR-FXD .1UF +-10% 50VDC CER	28480	0160-4835
A3A6C23	0160-4835	7		CAPACITOR-FXD .1UF +-10% 50VDC CER	28480	0160-4835
A3A6C24	0160-4835	7		CAPACITOR-FXD .1UF +-10% 50VDC CER	28480	0160-4835
A3A6C25	0160-4835	7		CAPACITOR-FXD .1UF +-10% 50VDC CER	28480	0160-4835
A3A6C26	0160-4835	7		CAPACITOR-FXD .1UF +-10% 50VDC CER	28480	0160-4835
A3A6C27	0160-4835	7		CAPACITOR-FXD .1UF +-10% 50VDC CER	28480	0160-4835
A3A6C28	0160-4835	7		CAPACITOR-FXD .1UF +-10% 50VDC CER	28480	0160-4835
A3A6C29	0160-4835	7		CAPACITOR-FXD .1UF +-10% 50VDC CER	28480	0160-4835
A3A6C30	0160-4835	7		CAPACITOR-FXD .1UF +-10% 50VDC CER	28480	0160-4835
A3A6C31	0160-4835	7		CAPACITOR-FXD .1UF +-10% 50VDC CER	28480	0160-4835
A3A6E1	1251-4787	2	1	SHUNT-DIP 8-POSITION	28480	1251-4787
A3A6J1	1200-0507	9	1	SOCKET-IC 16-CONT DIP-SLDR	28480	1200-0507
A3A6L1	08558-80011	6	1	FILTER COIL BLUE	28480	08558-80011
A3A6R1	0698-3155	1	3	RESISTOR 4.64K 1% .125W F TC=0+-100	24546	C4-1/8-T0-4641-F
A3A6R2	0698-3155	1		RESISTOR 4.64K 1% .125W F TC=0+-100	24546	C4-1/8-T0-4641-F
A3A6R3	0698-3155	1		RESISTOR 4.64K 1% .125W F TC=0+-100	24546	C4-1/8-T0-4641-F
A3A6R4	0698-3157	3	1	RESISTOR 19.6K 1% .125W F TC=0+-100	24546	C4-1/8-T0-1962-F
A3A6R5	0698-6320	8	1	RESISTOR 5K .1% .125W F TC=0+-25	03888	PME55-1/8-T9-5001-B
A3A6R6	0757-0401	0	1	RESISTOR 100 1% .125W F TC=0+-100	24546	C4-1/8-T0-101-F
A3A6TP1	0360-0535	0	11	TERMINAL TEST POINT PCB	00000	ORDER BY DESCRIPTION
A3A6TP2	0360-0535	0		TERMINAL TEST POINT PCB	00000	ORDER BY DESCRIPTION
A3A6TP3	0360-0535	0		TERMINAL TEST POINT PCB	00000	ORDER BY DESCRIPTION
A3A6TP4	0360-0535	0		TERMINAL TEST POINT PCB	00000	ORDER BY DESCRIPTION
A3A6TP5	0360-0535	0		TERMINAL TEST POINT PCB	00000	ORDER BY DESCRIPTION
A3A6TP6	0360-0535	0		TERMINAL TEST POINT PCB	00000	ORDER BY DESCRIPTION
A3A6TP7	0360-0535	0		TERMINAL TEST POINT PCB	00000	ORDER BY DESCRIPTION
A3A6TP8	0360-0535	0		TERMINAL TEST POINT PCB	00000	ORDER BY DESCRIPTION
A3A6TP9	0360-0535	0		TERMINAL TEST POINT PCB	00000	ORDER BY DESCRIPTION
A3A6TP10	0360-0535	0		TERMINAL TEST POINT PCB	00000	ORDER BY DESCRIPTION
A3A6TP11	0360-0535	0		TERMINAL TEST POINT PCB	00000	ORDER BY DESCRIPTION
A3A6U1	1820-1871	6	2	IC ADDR TTL S BIN FULL ADDR 4-BIT	01295	SN74S283N
A3A6U2	1820-1871	6		IC ADDR TTL S BIN FULL ADDR 4-BIT	01295	SN74S283N
A3A6U3	1810-0205	7	1	NETWORK-RES 8-SIP4.7K OHM X 7	01121	208A472
A3A6U4	85662-80019	3	1	IC ROM B 512X8	28480	85662-80019
A3A6U5	85662-80009	1	1	IC ROM B 512X8	28480	85662-80009
A3A6U6	85662-80020	6	1	IC ROM B 512X8	28480	85662-80020
A3A6U7	85662-80007	9	1	IC ROM B 512X8	28480	85662-80007
A3A6U8	85662-80010	4	1	IC ROM B 512X8	28480	85662-80010
A3A6U9	85662-80017	1	1	IC ROM B 512X8	28480	85662-80017
A3A6U10	85662-80008	0	1	IC ROM B 512X8	28480	85662-80008
A3A6U11	85662-80018	2	1	IC ROM B 512X8	28480	85662-80018
A3A6U12	1820-1076	3	2	IC FF TTL S D-TYPE POS-EDGE-TRIG CLEAR	01295	SN74S174N
A3A6U13	1820-1981	9	2	IC RGTR TTL S QUAD 2-INP	34335	AM25S09PC
A3A6U14	1820-1981	9		IC RGTR TTL S QUAD 2-INP	34335	AM25S09PC
A3A6U15	1820-1076	3		IC FF TTL S D-TYPE POS-EDGE-TRIG CLEAR	01295	SN74S174N

TABLE 1. A3A6, REPLACEABLE PARTS (2 OF 2)

Reference Designation	HP Part Number	C D	Qty	Description	Mfr Code	Mfr Part Number
A3A6U16				NOT ASSIGNED		
A3A6U17	1820-0685	8	2	IC GATE TTL S NAND TPL 3-INP	01295	SN74S10N
A3A6U18	1820-0681	4	2	IC GATE TTL S NAND QUAD 2-INP	01295	SN74S00N
A3A6U19	1820-0685	8		IC GATE TTL S NAND TPL 3-INP	01295	SN74S10N
A3A6U20	1820-1423	4	1	IC MV TTL LS MONOSTBL RETRIG DUAL	01295	SN74LS123N
A3A6U21	1820-1729	3	2	IC LCH TTL LS COM CLEAR 8-BIT	01295	SN74LS259N
A3A6U22	1820-0693	8	1	IC FF TTL S D-TYPE POS-EDGE-TRIG	01295	SN74S74N
A3A6U23	1820-1729	3		IC LCH TTL LS COM CLEAR 8-BIT	01295	SN74LS259N
A3A6U24	1820-1196	8	1	IC FF TTL LS D-TYPE POS-EDGE-TRIG COM	01295	SN74LS174N
A3A6U25	1820-1112	8	1	IC FF TTL LS D-TYPE POS-EDGE-TRIG	01295	SN74LS74AN
A3A6U26	1820-1216	3	1	IC DCDR TTL LS 3-TO-8-LINE 3-INP	01295	SN74LS138N
A3A6U27	1820-0681	4		IC GATE TTL S NAND QUAD 2-INP	01295	SN74S00N
A3A6U29	1820-1491	6	1	IC BFR TTL LS NON-INV HEX 1-INP	01295	SN74LS367AN
				MISCELLANEOUS PARTS		
	4040-0754	1	2	EXTR PC BD BLU	28480	4040-0754

A3A6
MAIN CONTROL
85662-60146

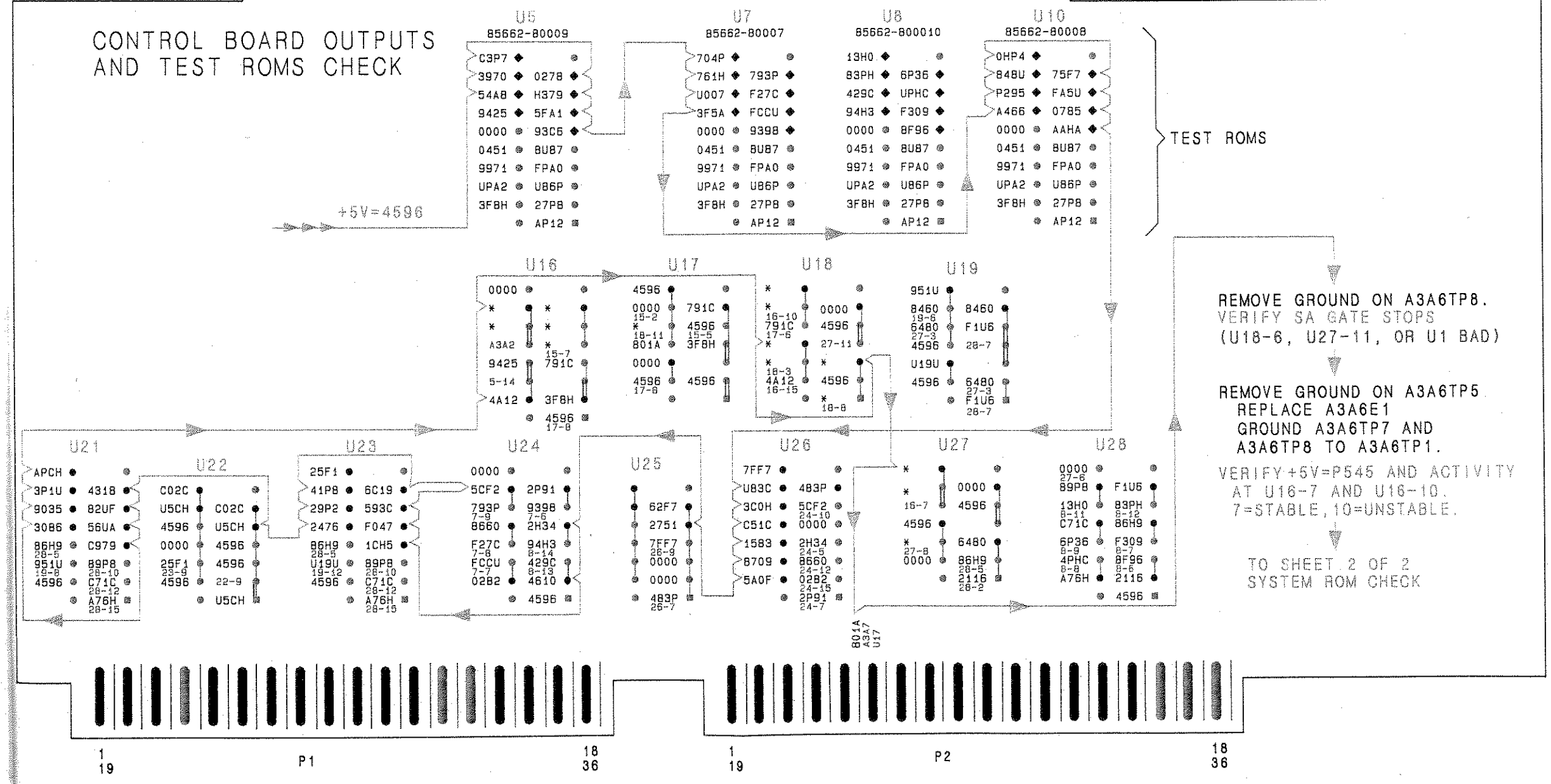

A3A6

FIGURE 3. A3A6 MAIN CONTROL, SIGNATURE ANALYSIS TROUBLESHOOTING DIAGRAM (1 OF 2)

NOTE

- FOR INSTRUCTIONS ON THE USE OF SIGNATURE ANALYSIS DIAG
  READ THE SIGNATURE ANALYSIS DESCRIPTION SECTION OF THI

CONTROL BOARD OUTPUTS AND TEST ROMS C

SPECTRUM ANALYZER CONNECTIONS:
GROUND A3A6TP5 AND A3A6TP8 TO A3A6TP1
JUMPER A3A6TP3 TO A3A6TP6
REMOVE A3A6E1 FROM A3A6J1 SOCKET
ADJUST INTENSITY FULLY CCW

SIGNATURE ANALYZER CONNECTIONS:
CLOCK ⌐ TO A3A6TP4 (LCLK)
START ⌐ TO A3A6TP11
STOP ⌐ TO A3A6TP11
POD GND TO A3A6TP1
PROBE GND TO A3A6TP1

PRESS:
A3A7S1 AFTER COMPLETING ALL CONNECTIONS

A3A6
MAIN CONTROL
85662-60146

NOTE

- FOR INSTRUCTIONS ON THE USE OF SIGNATURE ANALYSIS DIAGRAMS READ THE SIGNATURE ANALYSIS DESCRIPTION SECTION OF THIS MANUAL.

SYSTEM ROMS CHECK

SPECTRUM ANALYZER CONNECTIONS:
- REMOVE A3A6E1 FROM A3A6J1 SOCKET
- GROUND A3A6TP5 AND A3A6TP8 TO A3A6TP1
- REMOVE JUMPER FROM A3A6TP3 AND A3A6TP6

SIGNATURE ANALYZER CONNECTIONS:
- CLOCK ⌐¬ TO A3A6TP4 (LCLK)
- START ⌐¬ TO A3A6TP11
- STOP ⌐¬ TO A3A6TP11
- POD GND TO A3A6TP1
- PROBE GND TO A3A6TP1

PRESS:
- A3A7S1 AFTER COMPLETING CONNECTIONS FOR EACH TEST OR CHECK

TEST A CHECK

SPECTRUM ANALYZER CONNECTIONS:
- CONNECT A3A7J1 JUMPER TO PINS 5 AND 10
- JUMPER A3A7TP3 TO A3A7TP6
- ADJUST A3A2R12LL THRESH FULLY CW
- JUMPER A3A6TP3 TO A3A6TP6

SIGNATURE ANALYZER CONNECTIONS:
- CLOCK ⌐¬ TO A3A7TP1 (SA CLK)
- START ⌐¬ TO A3A6TP2
- STOP ⌐¬ TO A3A6TP2
- POD GND TO A3A6TP1
- PROBE GND TO A3A6TP1.

PRESS:
- A3A7S1 AFTER COMPLETING CONNECTIONS FOR EACH TEST OR CHECK

TEST B CHECK

SPECTRUM ANALYZER CONNECTIONS:
- CONNECT A3A7J1 JUMPER TO PINS 5 AND 11
- JUMPER A3A7TP3 TO A3A7TP6
- ADJUST A3A2R12LL THRESH FULLY CW
- JUMPER A3A6TP3 TO A3A6TP6

SIGNATURE ANALYZER CONNECTIONS:
- CLOCK ⌐¬ TO A3A7TP1 (SA CLK)
- START ⌐¬ TO A3A6TP2
- STOP ⌐¬ TO A3A6TP2
- POD GND TO A3A6TP1
- PROBE GND TO A3A6TP1

PRESS:
- A3A7S1 AFTER COMPLETING CONNECTIONS FOR EACH TEST OR CHECK

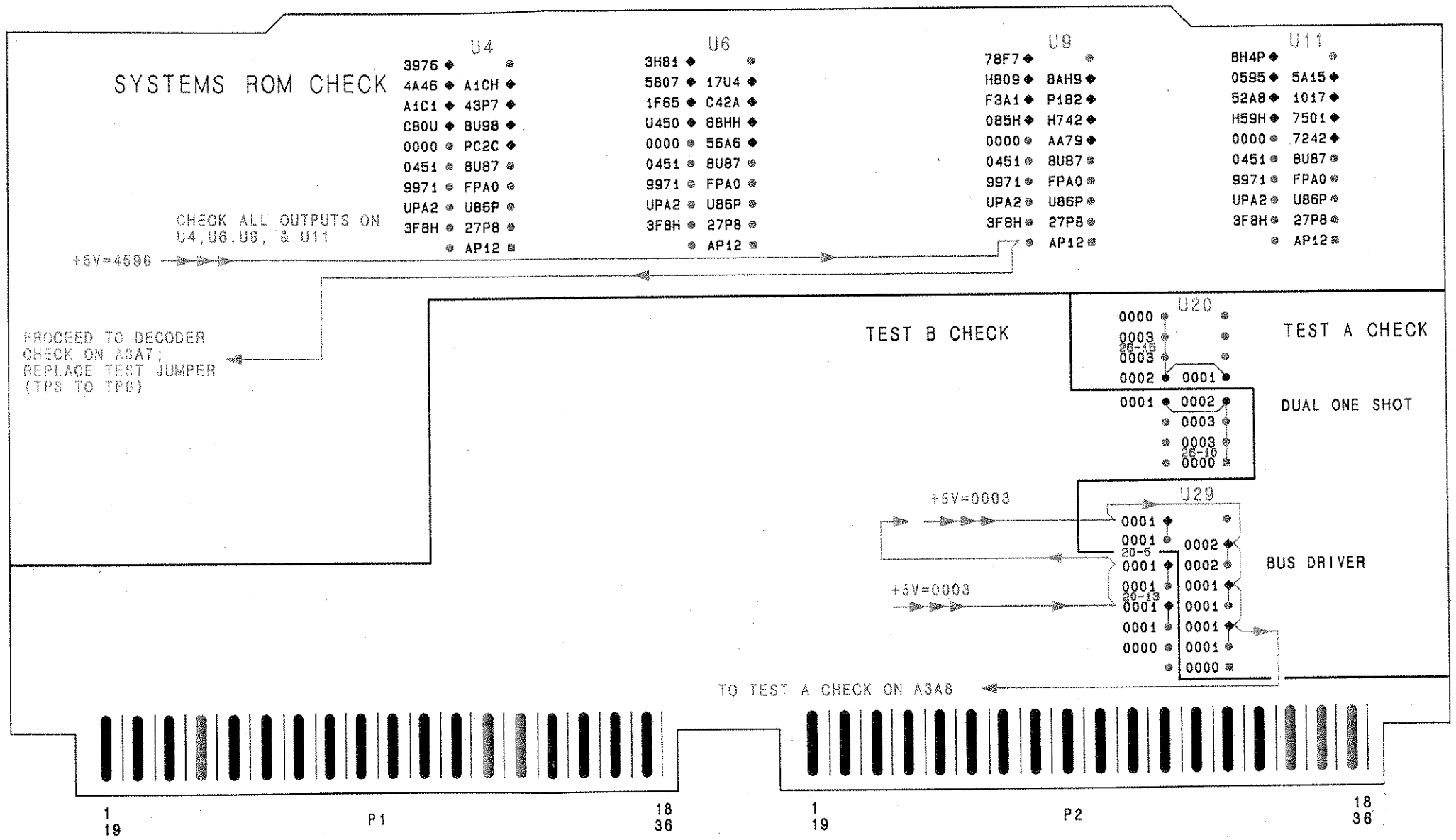

A3A6

FIGURE 3. A3A6 MAIN CONTROL. SIGNATURE ANALYSIS TROUBLESHOOTING DIAGRAM (2 OF 2)

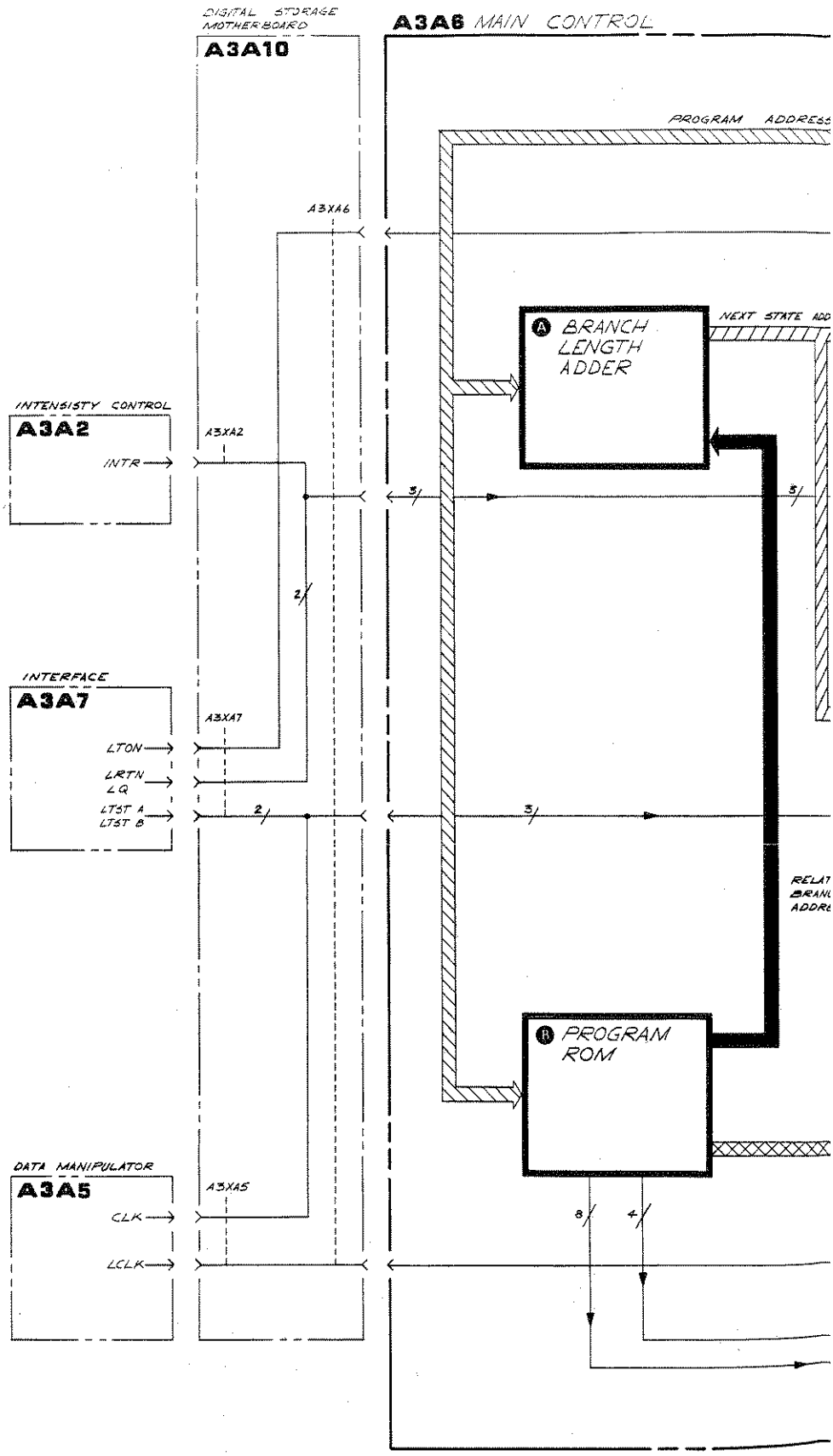
DIGITAL STORAGE MOTHERBOARD
A3A10
A3A6 MAIN CONTROL
PROGRAM ADDRESS
A3XA6
A BRANCH LENGTH ADDER
NEXT STATE ADD
INTENSISTY CONTROL
A3A2
INTR
A3XA2
3/
3/
2/
INTERFACE
A3A7
A3XA7
LTON
LRTN
LQ
LTST A
LTST B
2/
3/
RELAT
BRANC
ADDR
B PROGRAM ROM
DATA MANIPULATOR
A3A5
A3XA5
CLK
LCLK
8/
4/

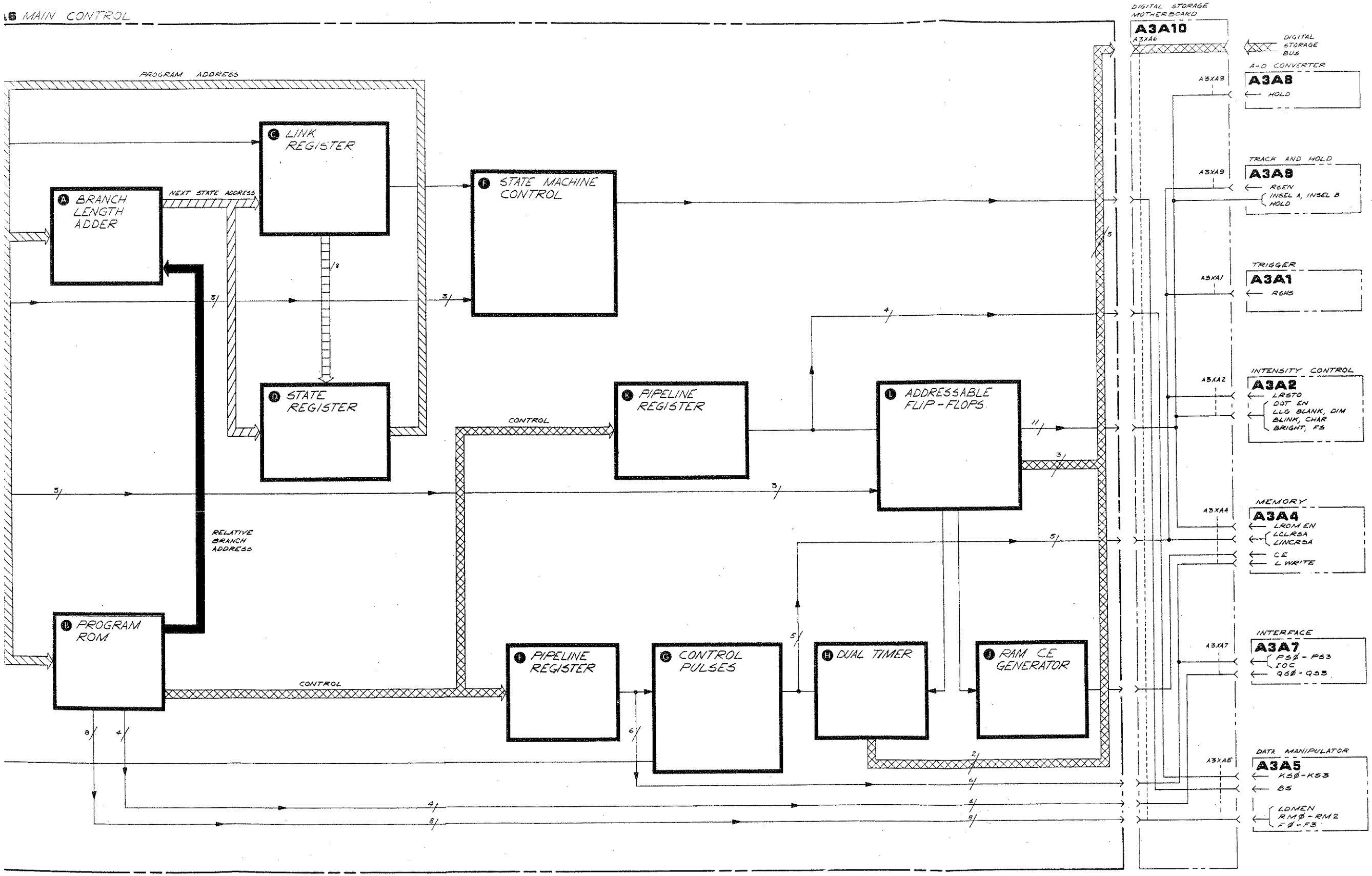

A3A6

FIGURE 4. A3A6 MAIN CONTROL, BLOCK DIAGRAM

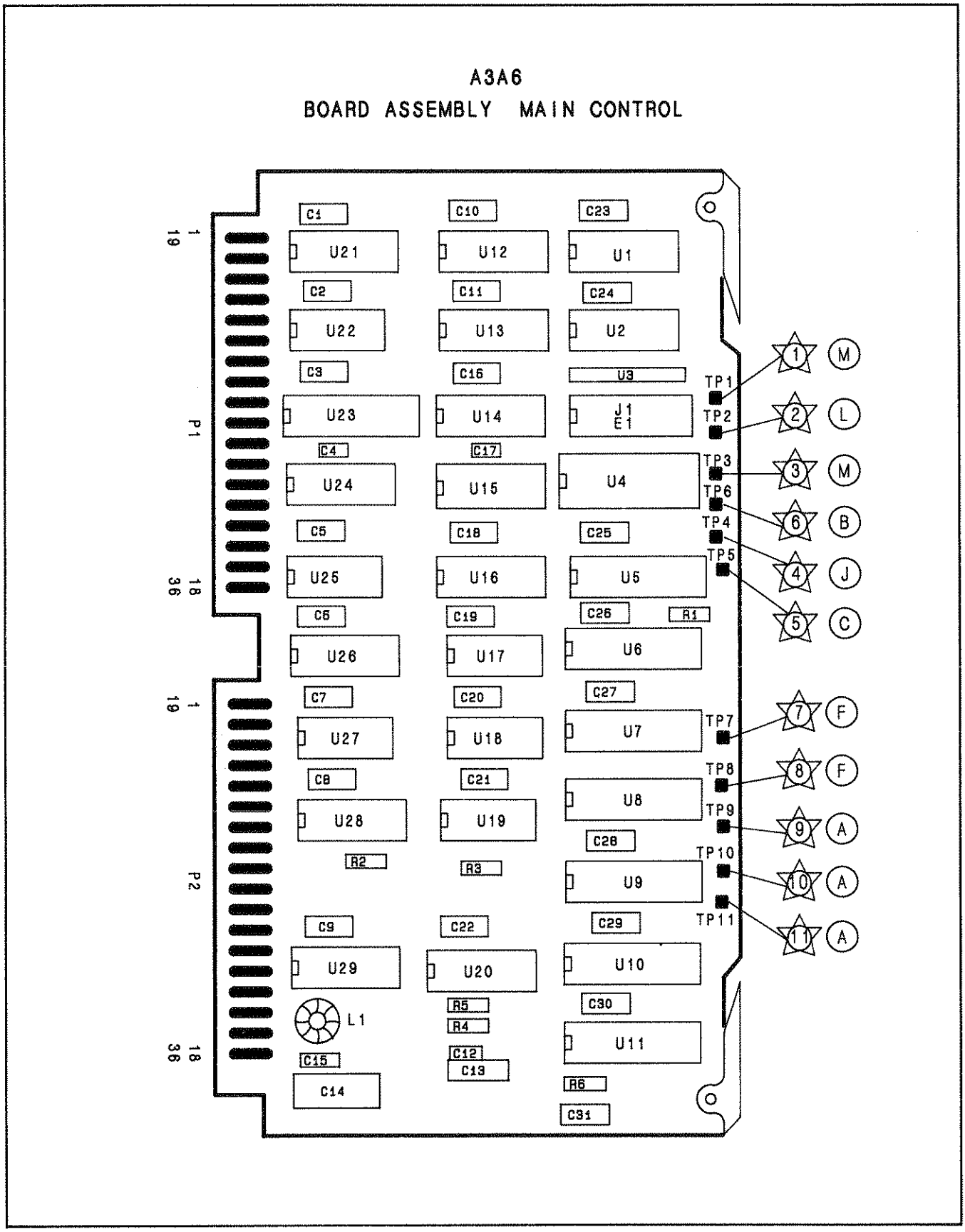

FIGURE 5. A3A6 MAIN CONTROL, COMPONENT LOCATIONS

A3A6 MAIN CONTROL
85662-60146

P1

PIN	SIGNAL	TO/FROM	FUNCTION BLOCK
1	BRIGHT	A3A2P2-22	L
19	FS	A3A2P2-23	L
2	LLG BLANK	A3A2P2-24	L
20	BLINK	A3A2P2-25	L
3	DIM	A3A2P2-26	L
21	CHAR	A3A2P2-1	L
4	NC		
22	LROM EN	A3A4P1-20	L
5	CE		J
23	INSEL A	A3A4P1-22, A3A9P1-13	L
6	INSEL B	A3A9P1-12	L
24	DOT EN	A3A2P1-20	L
7	HOLD	A3A8P1-27, A3A9P1-15	L
25	PS3	A3A7P1-29	E
8	GSØ	A3A7P1-30	B
26	PS2	A3A7P1-11	E
9	GS1	A3A7P1-31	B
27	PS1	A3A7P1-12	E
10	GS2	A3A7P1-32	B
28	PSØ	A3A7P1-13	E
11	GS3	A3A7P1-33	B
29	IOC	A3A7P1-14	E
12	RS EN	A3A9P1-30	G
30	NC		
13	LTON	A3A7P1-15	C
31	NC		
14	LG	A3A7P1-16	F
32	NC		
15	LCLRSA	A3A4P1-2	G
33	NC		
16	RSHS	A3A1P1-20	G
34	NC		
17	INCRSA	A3A4P1-21	G
35	LTST B	A3A7P2-4	L
18	LRSTO	A3A2P1-18	G
36	LTST A	A3A7P2-22	L

P2

PIN	SIGNAL	TO/FROM	FUNCTION BLOCK
1	KS1	A3A5P1-19	K
19	CLK	A3A5P1-8	L
2	KSØ	A3A5P1-1	K
20	LCLK	A3A5P1-22	G
3	KS3	A3A5P1-20	K
21	BS	A3A5P1-3	
4	KS2	A3A5P1-2	K
22	LWRITE	A3A4P1-19	E
5	RM2	A3A5P1-21	B
23	LRTN	A3A7P2-26	F
6	F3	A3A5P1-23	B
24	INTR	A3A2P1-26	F
7	F1	A3A5P1-25	B
25	RM1	A3A5P1-4	B
8	F2	A3A5P1-25	B
26	RMØ	A3A5P1-5	B
9	DM EN	A3A5P1-27	B
27	FØ	A3A5P1-6	B
10	BØ		H
28	B1		
11	B2		
29	B3		L
12	B4		L
30	B5		H
13	B6	DIGITAL STORAGE BUS	L
31	B7		
14	B8		
32	NC		
15	B10		
33	B11		
16	DGND		M
34	DGND		M
17	+5V		M
35	DGND		M
18	+5V		M
36	NC		

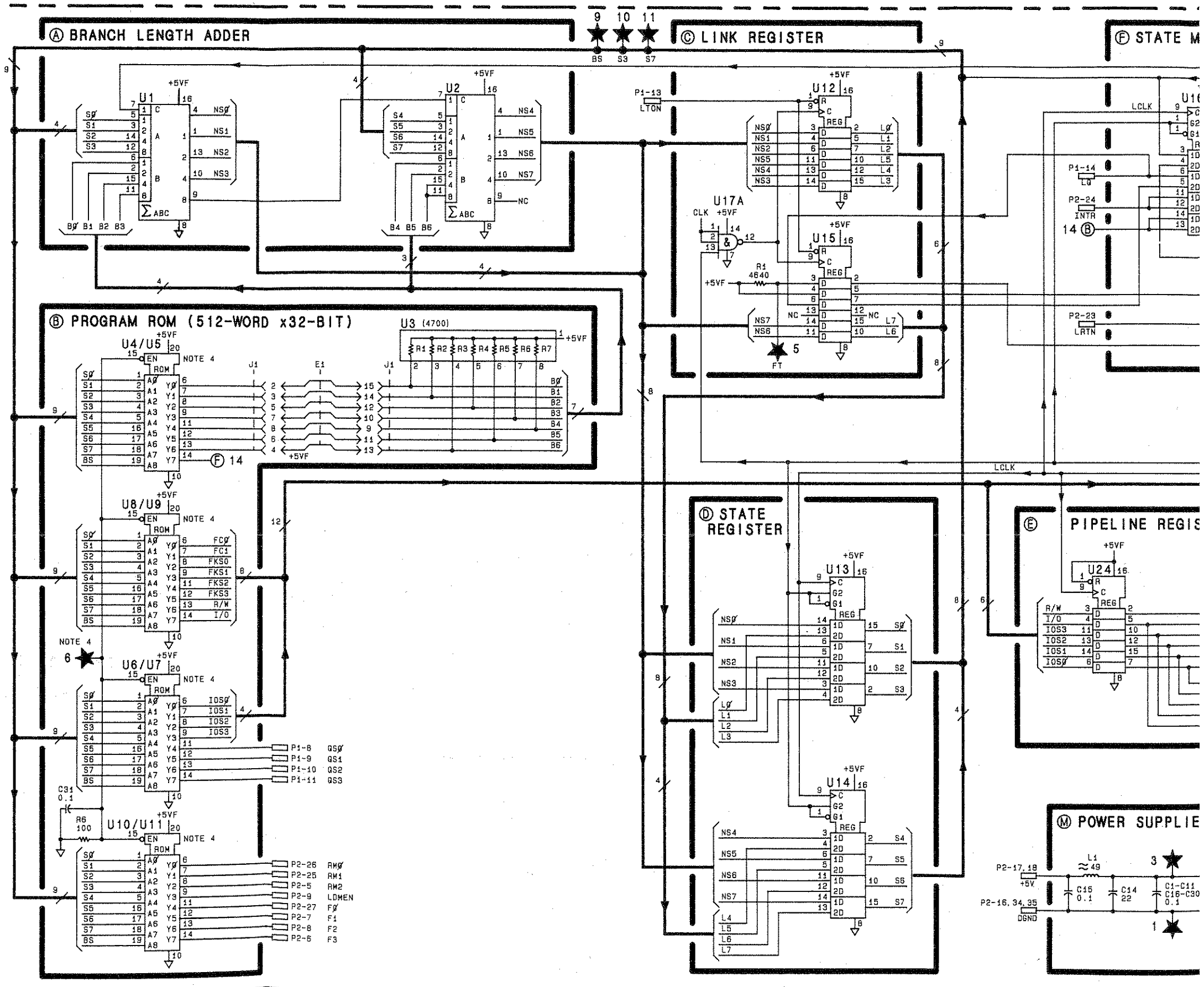

SERIAL PREFIX: 2403A

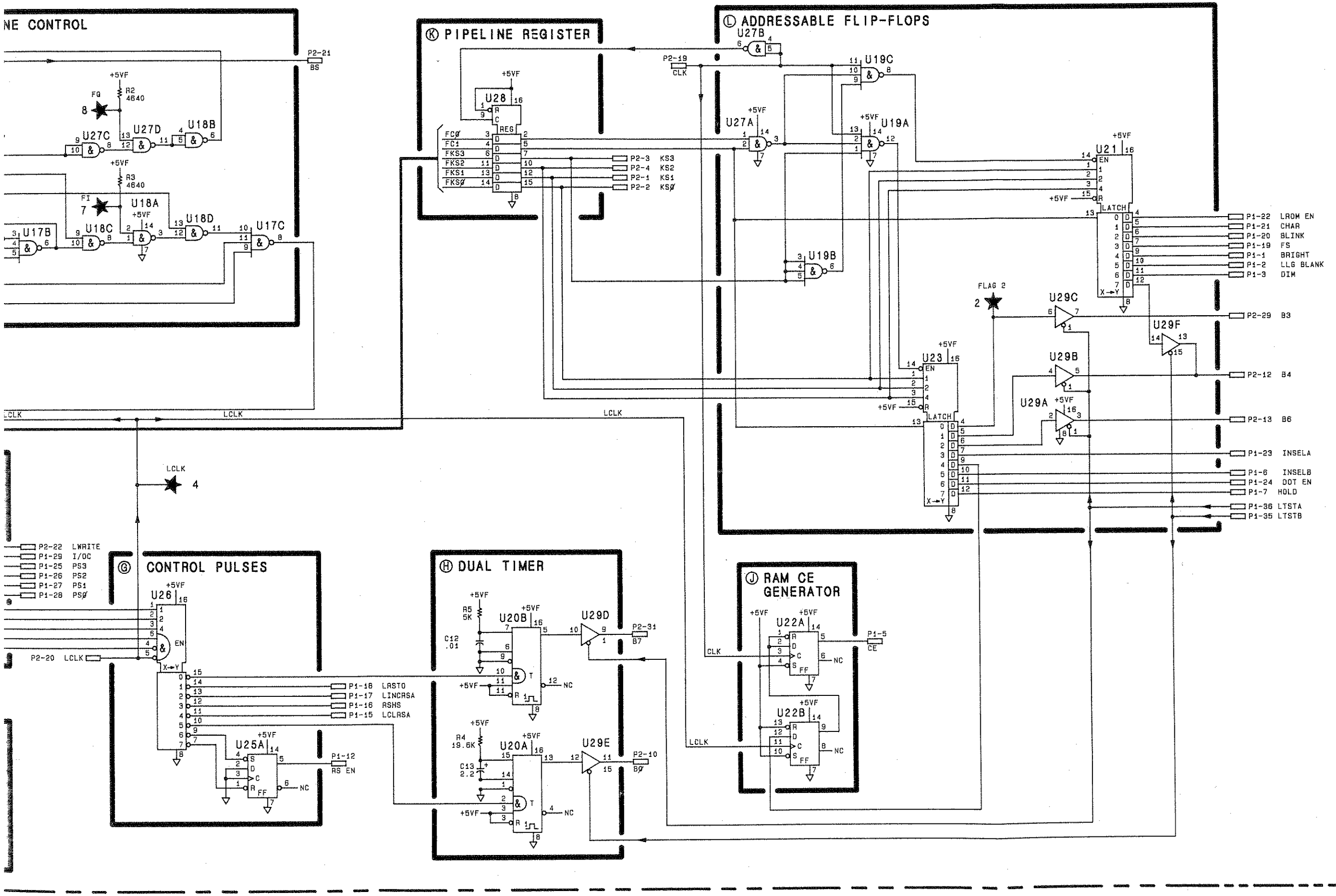

NOTES:

1. REFERENCE DESIGNATORS WITHIN THIS ASSEMBLY ARE ABBREVIATED. FOR COMPLETE REFERENCE DESIGNATION, PREFIX ABBREVIATION WITH ASSEMBLY DESIGNATION.
2. UNLESS OTHERWISE INDICATED:
   RESISTANCE IS IN OHMS (Ω)
   CAPACITANCE IS IN MICROFARADS (μF)
   INDUCTANCE IS IN MICROHENRIES (μH)
3. UNLESS OTHERWISE INDICATED:
   LOGIC LEVELS ARE TTL:
   +2.0V TO +5.0V=LOGIC "1"=HIGH
   0V TO +0.8V=LOGIC "0"=LOW
4. ROMS U4-U11 ARE USED IN PAIRS. U4, U6, U9, AND U11 ARE THE MAIN PROGRAM. ROMS U5, U7, U8, AND U10 ARE TEST PROGRAM ROMS. ALL CONNECTIONS TO EACH PAIR U4/U5, U6/U7, U8/U9, AND U11/U10 ARE THE SAME EXCEPT FOR PIN 15 AND PIN 20.

	PIN 15	PIN 20
U4, U6, U9, U11	TP6	+5V
U5, U7, U8, U10	GND	TP6

   TO ENABLE THE TEST PROGRAM, CONNECT TP3 TO TP6.
5. U3 PIN CONFIGURATION:

   U3 (4700Ω)

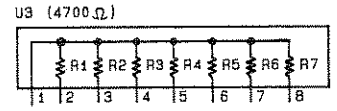

6. MNEMONIC TABLE:

MNEMONIC	DESCRIPTION
BRIGHT	BRIGHT CRT DISPLAY CONTROL
FS	FAST SWEEP MODE
LLG BLANK	LOW-LINE GENERATOR BLANKING CONTROL
BLINK	BLINK CRT DISPLAY CONTROL
DIM	DIM CRT DISPLAY CONTROL
CHAR	CHARACTER MODE DISPLAY CONTROL
L ROM EN	LOW=ROM ENABLE
CE	MEMORY CHIP ENABLE
INSELA	INPUT SELECT BIT A
INSELB	INPUT SELECT B
DOT EN	DOT ENABLE
HOLD	TRACK AND HOLD CONTROL
PSØ-PS3	I/O PORT SELECTION BITS Ø-3
GSØ-GS3	QUALIFIER SELECTION BITS Ø-3
IOC	I/O PORT INPUT/OUTPUT CONTROL
RSEN	RESET PEAK DETECTORS ENABLE
LTON	LOW=TURN ON
LQ	LOW=SELECTED QUALIFIER
LCLRSA	LOW=CLEAR STROKE ADDRESS
RSHS	RESET HIGH SWEEP
INCRSA	INCREMENT STROKE ADDRESS
LTSTA	LOW=INPUT TEST A DATA
LTSTB	LOW=INPUT TEST B DATA
LRSTO	LOW=RESET TRIGGER
KSØ-KS3	CONSTANT SELECTION BITS Ø-3
CLK	8MHz SYSTEM CLOCK
LCLK	INVERTED CLOCK
BS	BLOCK SWITCH CONTROL
LDMEN	LOW=DATA MANIPULATOR OUTPUT ENABLE
LWRITE	MEMORY WRITE CONTROL
RMØ-RM2	RAM REGISTER SELECTION BITS Ø-2
LRTN	LOW=ENABLE INTERRUPT RETURN
FØ-F3	PART OF FUNCTION SELECTION BITS Ø-2
INTR	INTERUPT CONTROL
BØ-B11	DIGITAL STORAGE BUS DATA BITS Ø-11

7. UNLESS OTHERWISE INDICATED:
   SIGNALS ENTER AT LEFT SIDE AND EXIT AT RIGHT SIDE OF FUNCTION BLOCKS.

A3A6

FIGURE 6. A3A6 MAIN CONTROL, SCHEMATIC DIAGRAM

A3A7 INTERFACE, CIRCUIT DESCRIPTION

A3A7 Interface provides data transfer between A15 Controller and A3 Digital Storage. This assembly also includes qualifier selection for conditional branching, input/output (I/O) port decoding, and the main clock circuits.

Data Transfer Register (A)

U2, U7, U8, and U9 form a 16-bit Data Transfer Register which can be loaded or output onto either the Instrument Bus (through U16 and U17, the Instrument Bus Drivers) or the Digital Storage Bus (through U3, U4, and U5, the Digital Storage Bus Drivers).

Instrument Address Decoder (C)

U6, U14, and U15 control the loading and output of data between the Data Transfer Register and the Instrument Bus.

Qualifier Select (H)

U20 and U21 select one of 16 qualifiers to be used for conditional branching. Selection is controlled by A3A6 Main Control firmware.

I/O Port Decoder (D)

U18 and U19 decode I/O port control signals from the Pipeline Registers in A3A6 Main Control.

Timing Generator (G)

U10, U11, U12, and U13 generate 8-MHz, 1-MHz, and 200-kHz timing signals used by A3 Digital Storage.

A3A7 INTERFACE, TROUBLESHOOTING

The A3A7 Interface assembly contains several different circuits. Testing the Timing Generator and Turn-on Control is probably best done with an oscilloscope to monitor the 8-MHz, 1-MHz, and 200-kHz outputs. The I/O Port Decoder, on SA Diagram 1, is tested using the Free Run check. The Qualifier Select circuit is checked, along with the A3A5 Data Manipulator assembly, using Test Program 2. The Digital Storage address check uses the self-check routine from the A15 Controller in the RF Section.

The IOB interface circuitry is checked on SA Diagram 2 using the overall Test Program 4. The 50-wire Analyzer Bus Interconnect cable W31 is removed so that the U16 and U17 Bus Drivers **(B)** can continually drive the IOB lines when A3A7TP8 is grounded. The address section of the interface is done first, with the jumper pin put in pin 6 of A3A7J1 to generate the proper clock for the Signature Analyzer. To check the data portion of the interface, the jumper is moved to pin 7. If a fault is found in verifying the data at the P2 connector, the jumper E1 is opened before probing U3 to U9. This opens the feedback from the Data Transfer Registers **(A)** through the Bus Driver **(B)** and back to the register **(A)**. If all the Bus Driver **(B)** outputs and the Digital Storage Bus Driver **(E)** outputs are good when the jumper is opened, then the fault is in the register corresponding to the bad bit detected at the connector; i.e., its IOB input is defective.

If the fault appears to be a bus fight problem (i.e., the A15 Controller cannot properly drive the IOB data lines until A3A7 is removed), then the problem might be that the Bus Driver **(B)** will not go into its high impedance output state. This can be determined by checking with an oscilloscope the IOB0-11 lines with the Analyzer Bus Interconnect cable disconnected and with A3A7TP8 not grounded. The lines should be "floating," usually between 1.4V and 2V. With the Analyzer Bus Interconnect cable disconnected, A1A8TP1 and A1A8TP2 must be jumpered to turn on the power supplies.

TABLE 1. A3A7, REPLACEABLE PARTS (1 OF 2)

Reference Designation	HP Part Number	C D	Qty	Description	Mfr Code	Mfr Part Number
A3A7	85662-60127	2	1	BOARD ASSEMBLY, INTERFACE	28480	85662-60127
A3A7C1	0160-4835	7	23	CAPACITOR-FXD .1UF +-10% 50VDC CER	28480	0160-4835
A3A7C2	0160-4835	7		CAPACITOR-FXD .1UF +-10% 50VDC CER	28480	0160-4835
A3A7C3	0160-4835	7		CAPACITOR-FXD .1UF +-10% 50VDC CER	28480	0160-4835
A3A7C4	0160-4835	7		CAPACITOR-FXD .1UF +-10% 50VDC CER	28480	0160-4835
A3A7C5	0160-4835	7		CAPACITOR-FXD .1UF +-10% 50VDC CER	28480	0160-4835
A3A7C6	0160-4835	7		CAPACITOR-FXD .1UF +-10% 50VDC CER	28480	0160-4835
A3A7C7	0160-4835	7		CAPACITOR-FXD .1UF +-10% 50VDC CER	28480	0160-4835
A3A7C8	0160-4835	7		CAPACITOR-FXD .1UF +-10% 50VDC CER	28480	0160-4835
A3A7C9	0160-4835	7		CAPACITOR-FXD .1UF +-10% 50VDC CER	28480	0160-4835
A3A7C10	0160-4835	7		CAPACITOR-FXD .1UF +-10% 50VDC CER	28480	0160-4835
A3A7C11	0160-4835	7		CAPACITOR-FXD .1UF +-10% 50VDC CER	28480	0160-4835
A3A7C12	0160-4835	7		CAPACITOR-FXD .1UF +-10% 50VDC CER	28480	0160-4835
A3A7C13	0160-4835	7		CAPACITOR-FXD .1UF +-10% 50VDC CER	28480	0160-4835
A3A7C14	0160-4835	7		CAPACITOR-FXD .1UF +-10% 50VDC CER	28480	0160-4835
A3A7C15	0160-4835	7		CAPACITOR-FXD .1UF +-10% 50VDC CER	28480	0160-4835
A3A7C16	0160-4835	7		CAPACITOR-FXD .1UF +-10% 50VDC CER	28480	0160-4835
A3A7C17	0160-4835	7		CAPACITOR-FXD .1UF +-10% 50VDC CER	28480	0160-4835
A3A7C18	0160-4835	7		CAPACITOR-FXD .1UF +-10% 50VDC CER	28480	0160-4835
A3A7C19	0160-4835	7		CAPACITOR-FXD .1UF +-10% 50VDC CER	28480	0160-4835
A3A7C20	0160-4835	7		CAPACITOR-FXD .1UF +-10% 50VDC CER	28480	0160-4835
A3A7C21	0160-4835	7		CAPACITOR-FXD .1UF +-10% 50VDC CER	28480	0160-4835
A3A7C22	0160-4835	7		CAPACITOR-FXD .1UF +-10% 50VDC CER	28480	0160-4835
A3A7C23	0160-4835	7		CAPACITOR-FXD .1UF +-10% 50VDC CER	28480	0160-4835
A3A7C24	0180-0228	6	1	CAPACITOR-FXD 22UF+-10% 15VDC TA	56289	150D226X9015B2
A3A7CR1	1901-0535	9	1	DIODE-SM SIG SCHOTTKY	28480	1901-0535
A3A7E1	1460-1409	8	1	WIREFORM BE CU AC	28480	1460-1409
A3A7E2	1258-0124	7	1	PIN-PROGRAMING JUMPER .30 CONTACT	91506	8136-475G1
A3A7J1	1200-0508	0	1	SOCKET-IC 14-CONT DIP-SLDR	28480	1200-0508
A3A7L1	08558-80011	6	1	FILTER COIL BLUE	28480	08558-80011
A3A7L2	9100-1618	1	1	INDUCTOR RF-CH-MLD 5.6UH 10%	28480	9100-1618
A3A7Q1	1854-0404	0	1	TRANSISTOR NPN SI TO-18 PD=360MW	28480	1854-0404
A3A7R1	0757-0278	9	4	RESISTOR 1.78K 1% .125W F TC=0+-100	24546	C4-1/8-T0-1781-F
A3A7R2	0757-0278	9		RESISTOR 1.78K 1% .125W F TC=0+-100	24546	C4-1/8-T0-1781-F
A3A7R3	0757-0278	9		RESISTOR 1.78K 1% .125W F TC=0+-100	24546	C4-1/8-T0-1781-F
A3A7R4	0757-0278	9		RESISTOR 1.78K 1% .125W F TC=0+-100	24546	C4-1/8-T0-1781-F
A3A7S1	3101-2170	8	1	SWITCH-PB SPDT MOM	28480	3101-2170
A3A7TP1	0360-0535	0	10	TERMINAL TEST POINT PCB	00000	ORDER BY DESCRIPTION
A3A7TP2	0360-0535	0		TERMINAL TEST POINT PCB	00000	ORDER BY DESCRIPTION
A3A7TP3	0360-0535	0		TERMINAL TEST POINT PCB	00000	ORDER BY DESCRIPTION
A3A7TP4	0360-0535	0		TERMINAL TEST POINT PCB	00000	ORDER BY DESCRIPTION
A3A7TP5	0360-0535	0		TERMINAL TEST POINT PCB	00000	ORDER BY DESCRIPTION
A3A7TP6	0360-0535	0		TERMINAL TEST POINT PCB	00000	ORDER BY DESCRIPTION
A3A7TP7	0360-0535	0		TERMINAL TEST POINT PCB	00000	ORDER BY DESCRIPTION
A3A7TP8	0360-0535	0		TERMINAL TEST POINT PCB	00000	ORDER BY DESCRIPTION
A3A7TP9	0360-0535	0		TERMINAL TEST POINT PCB	00000	ORDER BY DESCRIPTION
A3A7TP10	0360-0535	0		TERMINAL TEST POINT PCB	00000	ORDER BY DESCRIPTION
A3A7U1	1810-0206	8	1	NETWORK-RES 8-SIP10.0K OHM X 7	01121	208A103
A3A7U2	1820-1444	9	4	IC MUXR/DATA-SEL TTL LS 2-TO-1-LINE QUAD	01295	SN74LS298N
A3A7U3	1820-1491	6	5	IC BFR TTL LS NON-INV HEX 1-INP	01295	SN74LS367AN
A3A7U4	1820-1491	6		IC BFR TTL LS NON-INV HEX 1-INP	01295	SN74LS367AN
A3A7U5	1820-1491	6		IC BFR TTL LS NON-INV HEX 1-INP	01295	SN74LS367AN
A3A7U6	1820-1202	7	2	IC GATE TTL LS NAND TPL 3-INP	01295	SN74LS10N
A3A7U7	1820-1444	9		IC MUXR/DATA-SEL TTL LS 2-TO-1-LINE QUAD	01295	SN74LS298N
A3A7U8	1820-1444	9		IC MUXR/DATA-SEL TTL LS 2-TO-1-LINE QUAD	01295	SN74LS298N
A3A7U9	1820-1444	9		IC MUXR/DATA-SEL TTL LS 2-TO-1-LINE QUAD	01295	SN74LS298N
A3A7U10	1820-1431	4	1	IC CNTR TTL LS DECD SYNCHRO	01295	SN74LS162AN
A3A7U11	1820-0693	8	1	IC FF TTL S D-TYPE POS-EDGE-TRIG	01295	SN74S74N
A3A7U12	1820-1432	5	1	IC CNTR TTL LS BIN SYNCHRO POS-EDGE-TRIG	01295	SN74LS163AN
A3A7U13	1820-2592	0	1	IC OSC TTL LS	01295	SN74LS320N
A3A7U14	1820-1202	7		IC GATE TTL LS NAND TPL 3-INP	01295	SN74LS10N
A3A7U15	1820-1416	5	1	IC SCHMITT-TRIG TTL LS INV HEX 1-INP	01295	SN74LS14N
A3A7U16	1820-1491	6		IC BFR TTL LS NON-INV HEX 1-INP	01295	SN74LS367AN
A3A7U17	1820-1491	6		IC BFR TTL LS NON-INV HEX 1-INP	01295	SN74LS367AN
A3A7U18	1820-1240	3	2	IC DCDR TTL S 3-TO-8-LINE 3-INP	01295	SN74S138N
A3A7U19	1820-1240	3		IC DCDR TTL S 3-TO-8-LINE 3-INP	01295	SN74S138N
A3A7U20	1820-1302	8	2	IC MUXR/DATA-SEL TTL S 8-TO-1-LINE 8-INP	01295	SN74S251N

TABLE 1. A3A7, REPLACEABLE PARTS (2 OF 2)

Reference Designation	HP Part Number	C D	Qty	Description	Mfr Code	Mfr Part Number
A3A7U21	1820-1302	8		IC MUXR/DATA-SEL TTL S 8-TO-1-LINE 8-INP	01295	SN74S251N
A3A7VR1	1902-3036	3	1	DIODE-ZNR 3.16V 5% DO-7 PD=.4W TC=-.064%	28480	1902-3036
A3A7Y1	0410-0758	6	1	CRYSTAL-QUARTZ 15.824 MHZ HC-18/U-HLDR	28480	0410-0758
				MISCELLANEOUS PARTS		
	4040-0755	2	2	EXTR PC BD VIO	28480	4040-0755

NOTE

- FOR INSTRUCTIONS ON THE USE OF SIGNATURE ANALYSIS DIAGRAMS READ THE SIGNATURE ANALYSIS DESCRIPTION SECTION OF THIS MANUAL.

DECODER CHECK

SIGNATURE ANALYZER CONNECTIONS:
CLOCK ⌐ TO A3A7TP7 (LCLK)
START ⌐ TO A3A6TP11
STOP ⌐ TO A3A6TP11
POD GND TO A3A7TP5
PROBE GND TO A3A7TP5

SPECTRUM ANALYZER CONNECTIONS:
REMOVE A3A6E1 FROM A3A6J1 SOCKET
CONNECT A3A7J1 JUMPER TO PINS 7 AND 8
GROUND A3A6TP5 AND A3A6TP8 TO A3A6TP1
JUMPER A3A6TP3 TO A3A6TP6
ADJUST INTENSITY FULLY CCW

PRESS:
A3A7S1 AFTER COMPLETING CONNECTIONS FOR EACH TEST OR CHECK.

QUALIFIER CHECK

SIGNATURE ANALYZER CONNECTIONS:
CLOCK ⌐ TO A3A7TP7
START ⌐ TO A3A6TP2
STOP ⌐ TO A3A6TP2
POD GND TK A3A7TP5
PROBE GND TO A3A7TP5

SPECTRUM ANALYZER CONNECTIONS:
(REPLACE A3A6E1)
ADJUST INTENSITY FULLY CCW
GROUND A3A6TP7 AND A3A6TP8 TO A3A6TP1
JUMPER A3A6TP3 TO A3A6TP2

DS ADDRESS CHECK

SIGNATURE ANALYZER CONNECTIONS:
CLOCK ⌐ TO A15TP1-2 (I/O)
START ⌐ TO A15TP1-6 (T2)
STOP ⌐ TO A15TP1-7 (T3)
POD GND TO A15TP9 (GND)

SPECTRUM ANALYZER CONNECTIONS:
GROUND A15TP2 (STS) TO A15TP3 (GND)
GROUND A3A7TP2 TO A3A7TP5
REMOVE A3A6

PRESS:
A3A7S1 AFTER COMPLETING CONNECTIONS FOR EACH TEST OR CHECK.

A3A7
INTERFACE
85662-60127

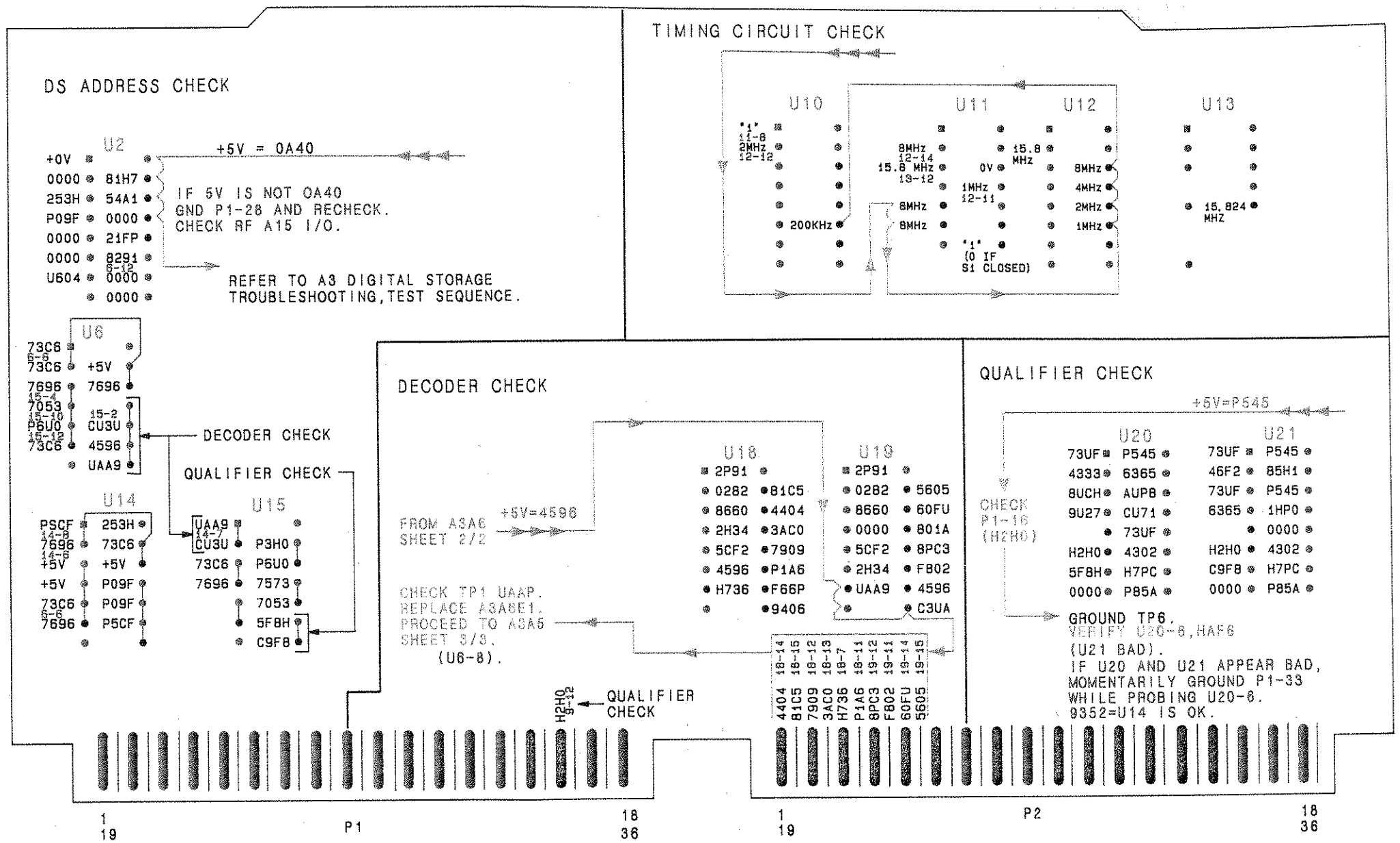

A3A7

FIGURE 1. A3A7 INTERFACE, SIGNATURE ANALYSIS DIAGRAM (1 OF 2)

NOTE

- FOR INSTRUCTIONS ON THE USE OF SIGNATURE ANALYSIS DIAGRAMS READ THE SIGNATURE ANALYSIS DESCRIPTION SECTION OF THIS MANUAL.

IOB INTERFACE CHECK (ADDRESS)

SIGNATURE ANALYZER CONNECTIONS:
- CLOCK _/‾ TO A3A7TP1 (SA CLK)
- START _/‾ TO A3A6TP2
- STOP _/‾ TO A3A6TP2
- POD GND TO A3A7TP5
- PROBE GND TO A3A7TP5

SPECTRUM ANALYZER CONNECTIONS:
- CONNECT A3A7J1 JUMPER TO PINS 6 AND 9
- JUMPER A3A7TP3 TO A3A7TP2 AND A3A7TP6
- GROUND A3A7TP3 TO A3A7TP5
- ADJUST A3A2R12 LL THRESH FULLY CW
- JUMPER A3A6TP3 TO A3A6TP6
- DISCONNECT REAR PANEL 50-WIRE CABLES
- JUMPER A1A8TP1 TO A1A8TP2

PRESS:
- A3A7S1 AFTER COMPLETING CONNECTIONS FOR EACH TEST OR CHECK.

IOB INTERFACE CHECK (DATA)

SIGNATURE ANALYZER CONNECTIONS:
- CLOCK _/‾ TO A3A7TP1 (SA CLK)
- START _/‾ TO A3A6TP2
- STOP _/‾ TO A3A6TP2
- POD GND TO A3A7TP5
- PROBE GND TO A3A7TP5

SPECTRUM ANALYZER CONNECTIONS:
- CONNECT A3A7J1 JUMPER PINS 7 AND 8
- JUMPER A3A7TP3 TO A3A7TP2 AND A3A7TP6
- GROUND A3A7TP8 TO A3A7TP5
- ADJUST A3A2R12 LL THRESH FULLY CW
- JUMPER A3A6TP3 TO A3A6TP6
- DISCONNECT REAR-PANEL 50-WIRE CABLE
- JUMPER A1A8TP1 TO A1A8TP2

PRESS:
- A3A7S1 AFTER COMPLETING CONNECTIONS FOR EACH TEST OR CHECK.

A3A7 INTERFACE 85662-60127

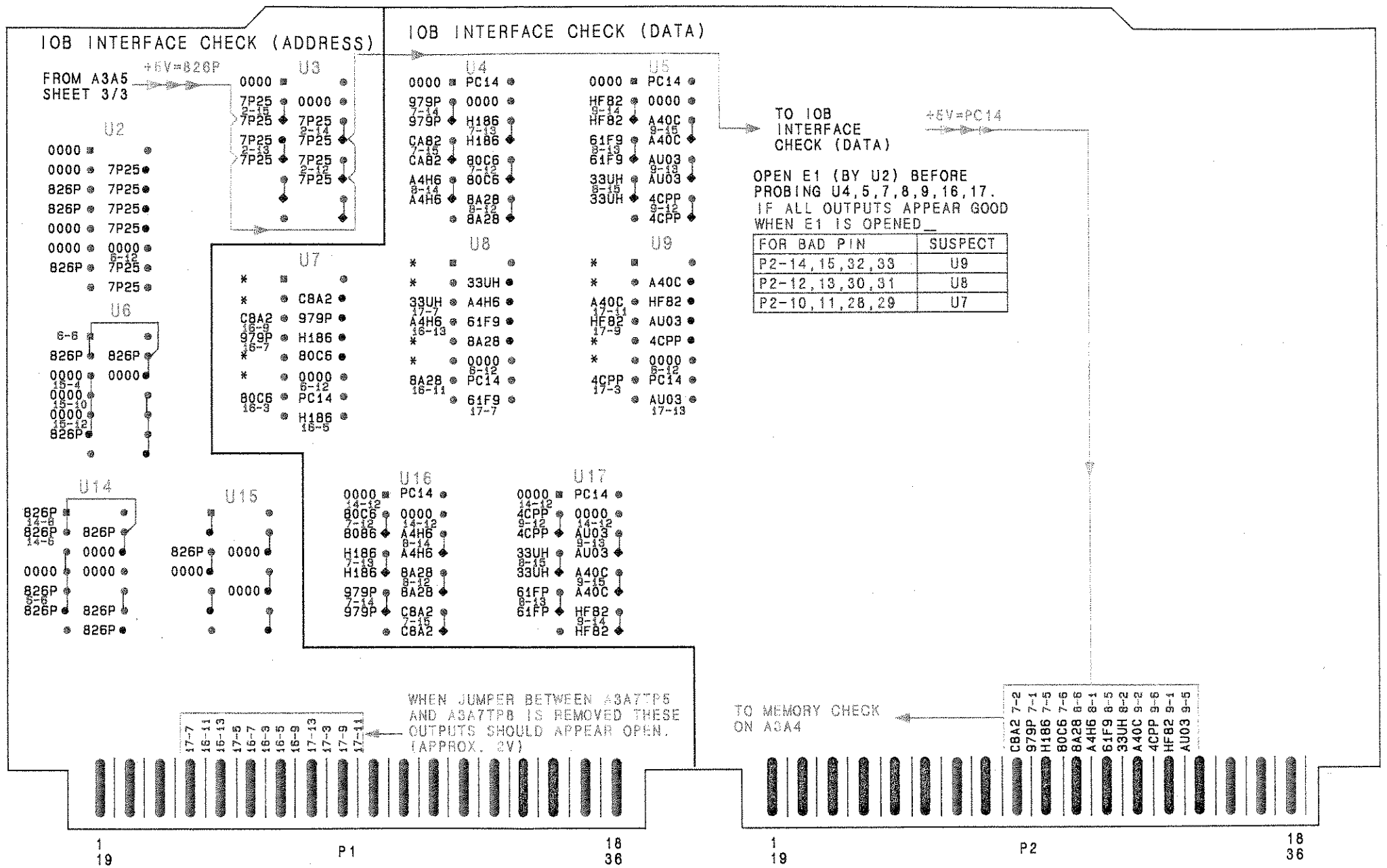

A3A7

FIGURE 1. A3A7 INTERFACE, SIGNATURE ANALYSIS DIAGRAM (2 OF 2)

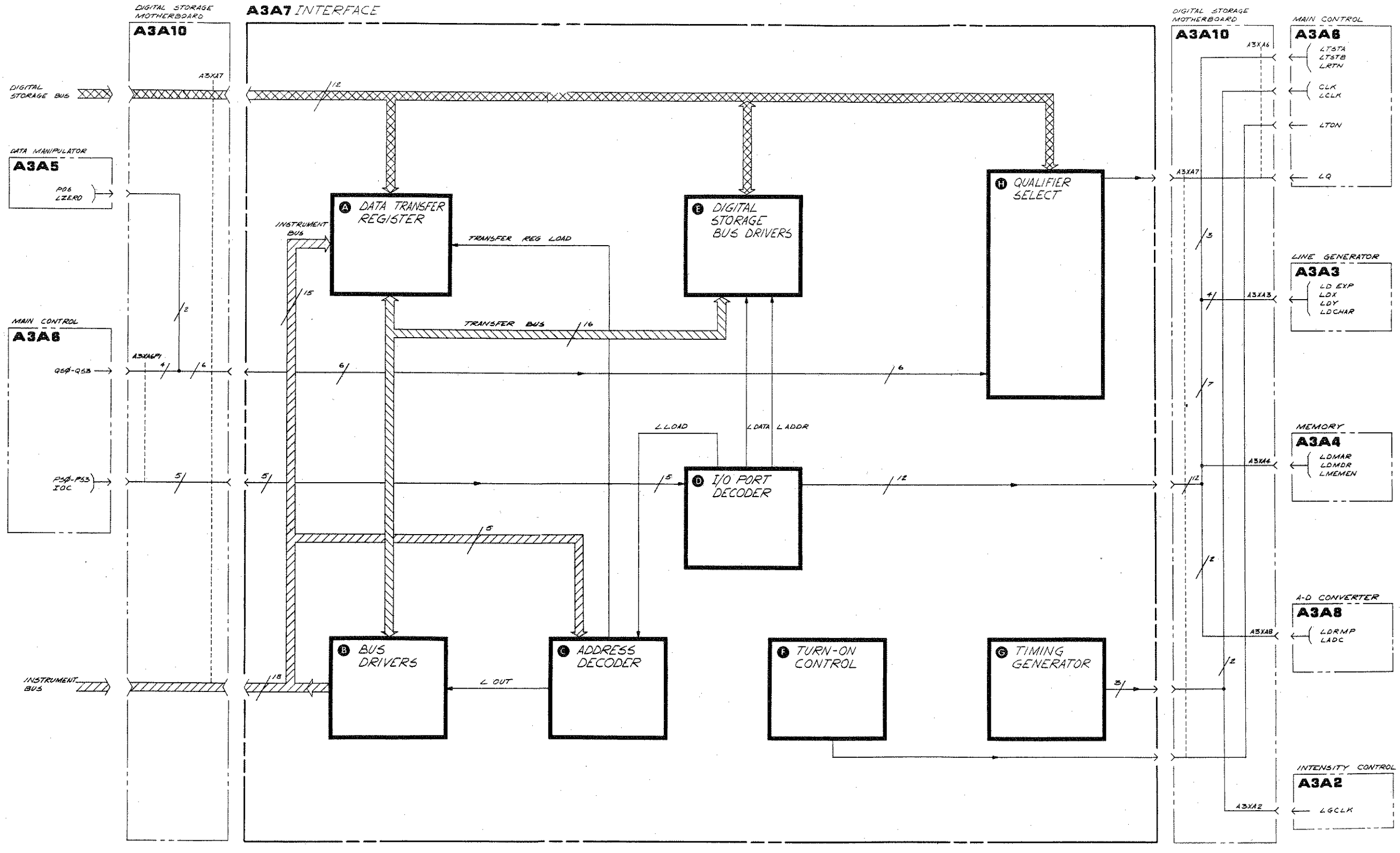

A3A7

FIGURE 2. A3A7 INTERFACE, BLOCK DIAGRAM

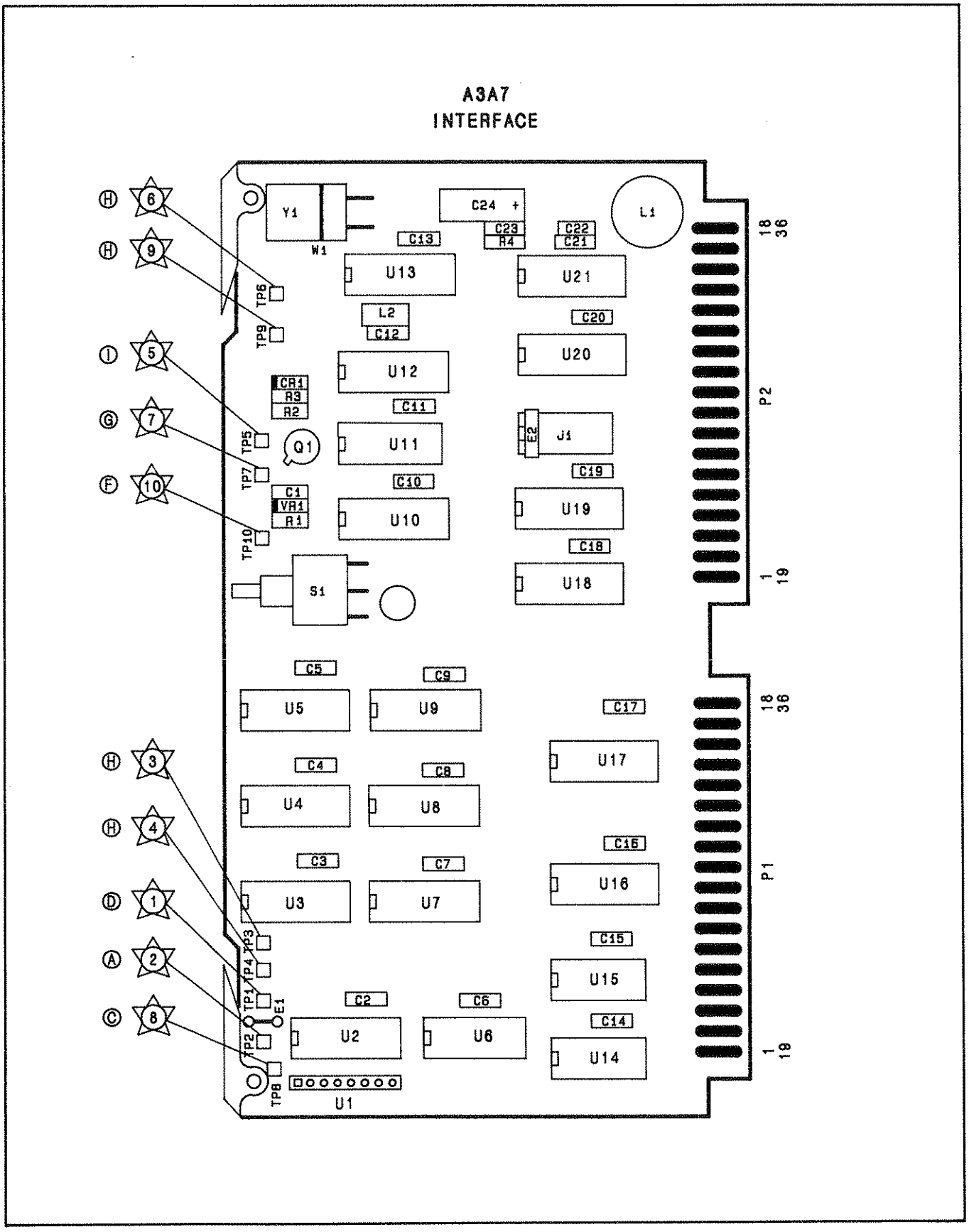

FIGURE 3. A3A7 INTERFACE, COMPONENT LOCATIONS

A3A7 INTERFACE
85662-60127

P1

PIN	SIGNAL	TO/FROM	FUNCTION BLOCK
1	ADRØ		A
19	ADR2		
2	ADR4		
20	LTIO		
3	ADR3		
21	ADR1		
4	IOB6		
22	IOB4		
5	IOB5	INSTRU-MENT BUS	
23	IOB7		
6	IOB1		
24	IOB3		
7	IOB2		
25	IOBØ		
8	IOB11		
26	IOB9		
9	IOB10		
27	IOB8		A
10	NC		
28	LDSR	A3A10J2-46	A
11	PS2	A3A6P1-26	D
29	PS3	A3A6P1-25	D
12	PS1	A3A6P1-27	D
30	GSØ	A3A6P1-8	H
13	PSØ	A3A6P1-28	D
31	GS1	A3A6P1-9	H
14	IOC	A3A6P1-29	D
32	GS2	A3A6P1-10	H
15	LTON	A3A6P1-13	F
33	GS3	A3A6P1-11	H
16	LG	A3A6P1-14	H
34	NC		
17	NC		
35	NC		
18	NC		
36	LD EXP	A3A6P1-19	D

P2

PIN	SIGNAL	TO/FROM	FUNCTION BLOCK
1	LDX	A3A3P2-22	D
19	LDCHAR	A3A3P2-20	D
2	LD MDR	A3A4P1-5	D
20	LDY	A3A3P1-21	D
3	LD MAR	A3A4P1-23	D
21	LD RMP	A3A8P1-8	D
4	LTST B	A3A6P1-35	D
22	LTST A	A3A6P1-36	D
5	LMEM EN	A3A4P1-4	D
23	LADC	A3A8P1-9	D
6	CLK	A3A6P2-19	G
24	LCLK	A3A6P2-20	G
7	NC		
25	1MHz	A3A8P1-7	G
8	LG CLK	A3A2P2-19	G
26	LATN	A3A6P2-23	D
9	LZERO	A3A5P1-26	H
27	POS	A3A5P1-7	H
10	BØ		A
28	B1		
11	B2		
29	B3		
12	B4	INSTRU-MENT BUS	
30	B5		
13	B6		
31	B7		
14	B8		
32	B9		
15	B10		A
33	B11		
16	GND		I
34	GND1		
17	+5V		I
35	NC		
18	+5V		I
36	NC		

P2-10 BØ
P2-28 B1
P2-11 B2
P2-29 B3
P2-12 B4
P2-30 B5
P2-13 B6
P2-31 B7
P2-14 B8
P2-32 B9
P2-15 B10
P2-33 B11

P1-25 IOBØ
P1-6 IOB1
P1-7 IOB2
P1-24 IOB3
P1-22 IOB4
P1-5 IOB5
P1-4 IOB6
P1-23 IOB7
P1-27 IOB8
P1-26 IOB9
P1-9 IOB10
P1-8 IOB11
P1-1 ADRØ
P1-21 ADR1
P1-19 ADR2
P1-3 ADR3
P1-2 ADR4
P1-20 LTIO

DIGITAL STORAGE BUS
INSTRUMENT BUS
11
12
18
7
3

Ⓐ DATA TRANSFER REGISTER

U9 U8 U7 — 74LS373 — +5VF — C9 C8 C7 .1
REG
U9: B8 B10 B11 B9 → T8 T10 T11 T9 — IOB8 IOB10 IOB11 IOB9
U8: B7 B5 B6 B4 → T7 T5 T6 T4 — IOB7 IOB5 IOB6 IOB4
U7: BØ B1 B2 B3 → TØ T1 T2 T3 — IOBØ IOB1 IOB2 IOB3
+5 VF — R1 R2

INSTRUMENT BUS
TRANSFER BUS
TRANSFER REG LOAD

Ⓑ BUS DRIVER

U16 U17 — 74LS245 — +5VF — C16 C17 .1
U16: TØ T2 T4 T5 T3 T1 → IOBØ IOB2 IOB4 IOB5 IOB3 IOB1
U17: T10 T11 T9 T7 T6 T8 → IOB10 IOB11 IOB9 IOB7 IOB6 IOB8
L OUT

INSTRUMENT BUS

Ⓒ ADDRESS DECODER

U15C — 74LS04 — NC
U6A — 74LS08 — C6 .1
U15B — 74LS04 — LTIO
U15E — 74LS04 — ADR3
U6B — 74LS08
U15F — 74LS04 — ADR4
U1R6 U1R7 — 10K
U14B — 74LS08
U14C — 74LS08
U14A — 74LS08 — C14 .1
ADR1
ADRØ
TRANSFER REG LOAD
L LOAD
L OUT

Ⓓ I/O PORT DECODER

U19 U18 — 74LS138 — +15VF — C19 C18 .1
P1-13 PSØ
P1-12 PS1
P1-11 PS2
P1-14 IOC
P1-29 PS3
L DATA
L ADDR
NC
J1 — E2 — SIGN ANAL TEST
L LOAD
CLK

Ⓘ POWER SUPPLIES

P2-17,18 +5V
P2-16 GND
P2-34 GND1
L1
C22 0.11
C24 22
C23 0.1
+5VF
GND

SERIAL PREFIX: 2403A

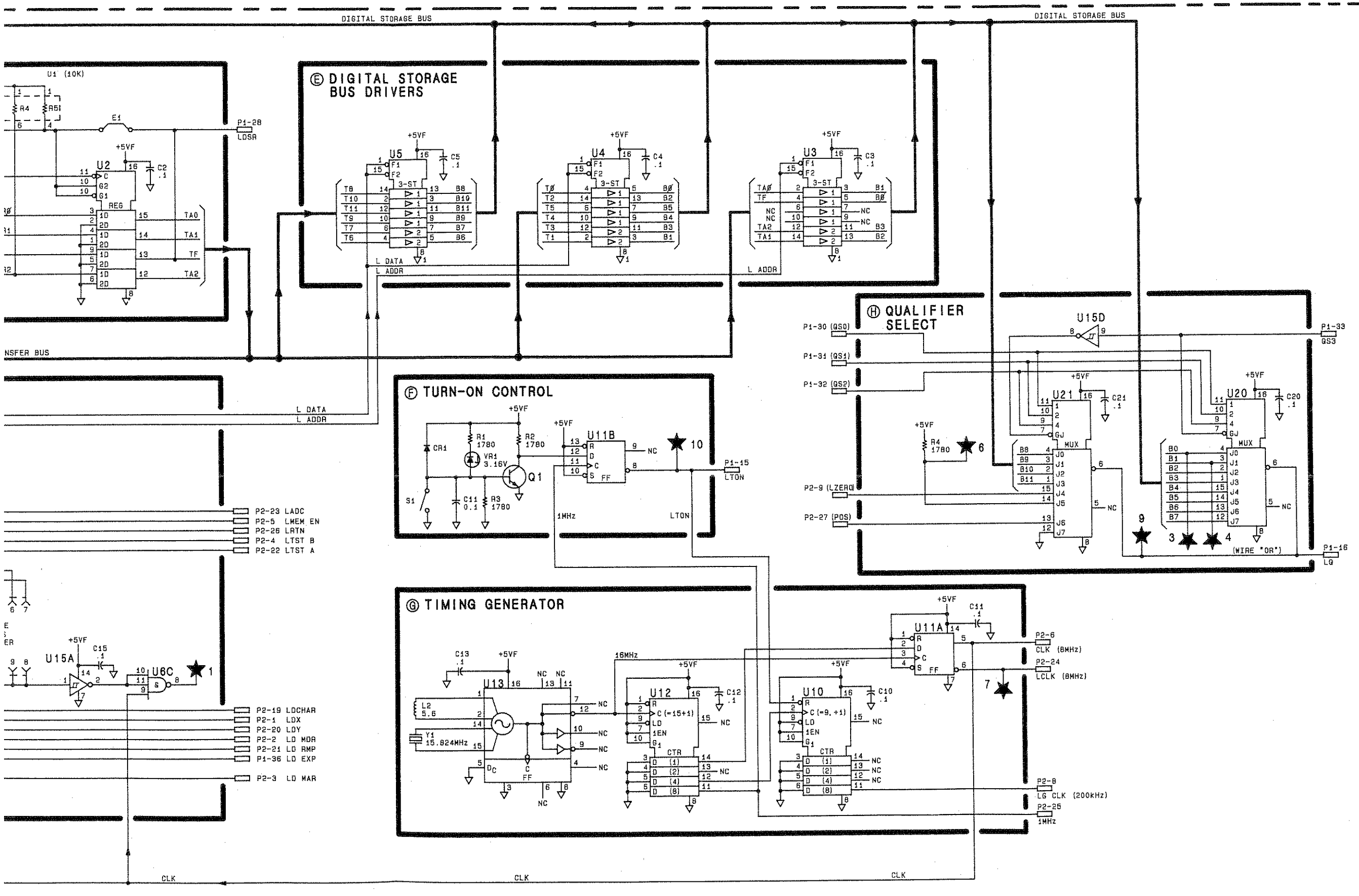

NOTES:

1. REFERENCE DESIGNATORS WITHIN THIS ASSEMBLY ARE ABBREVIATED. FOR COMPLETE REFERENCE DESIGNATION, PREFIX ABBREVIATION WITH ASSEMBLY DESIGNATION.
2. UNLESS OTHERWISE INDICATED:
   RESISTANCE IS IN OHMS (Ω)
   CAPACITANCE IS IN MICROFARADS (μF)
   INDUCTANCE IS IN MICROHENRIES (μH)
3. UNLESS OTHERWISE INDICATED:
   LOGIC LEVELS ARE TTL:
   +2.0V TO +5.0V = LOGIC "1" =HIGH
   0V TO +0.8V = LOGIC "0" =HIGH
4. MNEMONIC TABLE:

MNEMONIC	DESCRIPTION
ADRØ-ADR4	INSTRUMENT BUS ADDRESS BITS 0-4
IOBØ-IOB11	INSTRUMENT BUS DATA BITS 0-11
PSØ-PS3	I/O PORT SELECTION BITS
QSØ-QS3	QUALIFIER SELECTION BITS
DOTEN	DOT ENABLE
LDSR	LOW=DIGITAL STORAGE READY
IOC	I/O PORT INPUT/OUTPUT CONTROL
LTON	TURN ON CONTROL (LOW TRUE)
LQ	QUALIFIER SELECTION (LOW TRUE)
LD EXP	LOAD EXPAND REGISTER
LD X	LOAD X POSITION REGISTER
LD Y	LOAD Y POSITION REGISTER
LD CHAR	LOAD CHARACTER REGISTER
LD MDR	LOAD MEMORY DATA REGISTER
LD MAR	LOAD MEMORY ADDRESS REGISTER
LD RMP	LOAD RAMP REGISTER
LTSTA	LOW=INPUT TEST A DATA
LTSTB	LOW=INPUT TEST B DATA
LMEM EN	LOW=ENABLE MEMORY OUTPUT
LADC	LOW=ENABLE ADC OUTPUT
LRTN	LOW=ENABLE INTERRUPT RETURN
LZERO	ZERO CHECK ON ALU RESULT OUTPUT (LOW TRUE)
POS	SIGN OF ALU RESULTS (HIGH=+, LOW=-)
CLK	8MHz SYSTEM CLOCK
LCLK	INVERTED CLOCK
LG CLK	200kHz LINE GENERATOR CLOCK
LTIO	LOW=IF DISPLAY SECTION STROBE

5. U19 PIN CONFIGURATION:

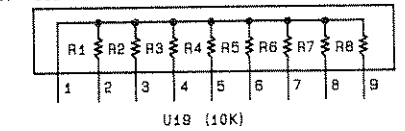

U19 (10K)

A3A7

FIGURE 4. A3A7 INTERFACE, SCHEMATIC DIAGRAM

A3A8 ANALOG-DIGITAL CONVERTER, CIRCUIT DESCRIPTION

A3A8 Analog-Digital Converter converts the analog VIDEO signal from A3A9 Track and Hold into storable digital data for A3 Digital Storage. The important data and control lines are: all Digital Storage Bus bits, B0 – B11, which are used for data inputs and outputs, ADC, which loads final ADC data onto the Digital Storage Bus; HOLD, which resets the ADC and initiates a conversion; LD RMP, which updates the Ramp DAC with a new scan address; and LTSTA, which enables test bits (B0, B1, and B2), RAMP, LTRK, and BUSY onto the Digital Storage Bus.

ADC (A)

The ADC (analog-to-digital) circuit converts analog (sampled video) data from A3A9 Track and Hold into 10 bits of binary code using the technique of successive approximation. A simplified schematic of the ADC circuit is shown in Figure 1.

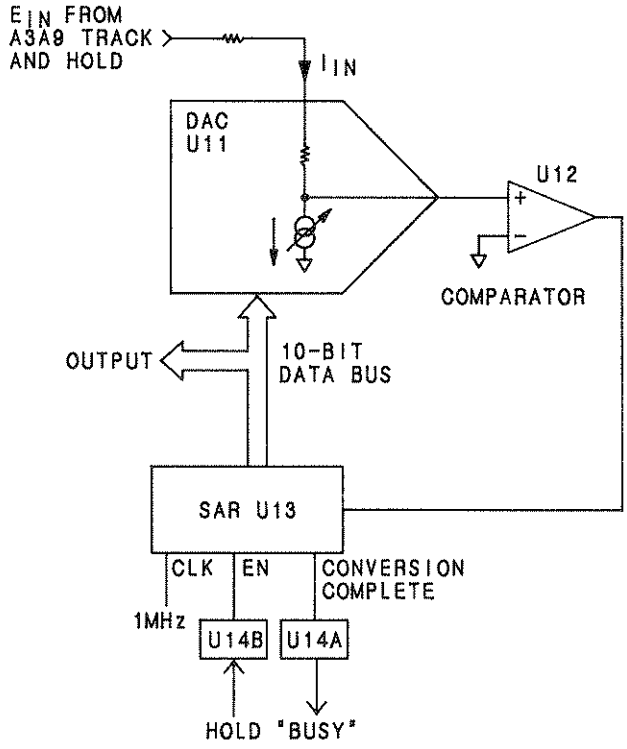

FIGURE 1. A3A8 ANALOG-DIGITAL CONVERTER, SIMPLIFIED SCHEMATIC

The ADC circuit consists of digital-to-analog converter (DAC) U11, comparator U12, and successive approximation register U13. A 1-MHz clock fixes conversion time at 11 μsec. To begin a conversion, the ADC is first reset to ones by a low HOLD. When HOLD goes high, each bit is individually tried in a "trial" conversion, starting with the most significant bit. A decision is made to retain or drop the bit based on the comparator output. Once the decision has been made for each of the 10 bits, a "conversion-complete" signal sets the flip-flop U14A. This signal, called BUSY, can be transferred onto the Digital Storage Bus by the BUS Buffers U15.

Ramp Converter (C)

The Ramp Converter makes a comparison between the analog sweep signal and the scan address (X Axis). Comparator U4 makes this comparison and produces a signal called RAMP. RAMP high indicates that the scan address needs to be updated. When RAMP is low, no update is needed. When an update occurs, a new address is latched into the Scan Address latches U9 and U10. This results in an updated comparison between the output of DAC U5 and the Sweep input as shown in the simplified schematic (Figure 2). A reference voltage is created for the DAC by VR1 and U3. This voltage is adjustable by R5 to set the full-scale (+10.000V) sweep ramp point at the 1000th data "bucket"; the rightmost edge of the CRT trace. Amplifier U2 sums the currents from the DAC U5, the sweep input, and the ZERO stick, and drives the comparator input. OFFS is adjustable by R6.

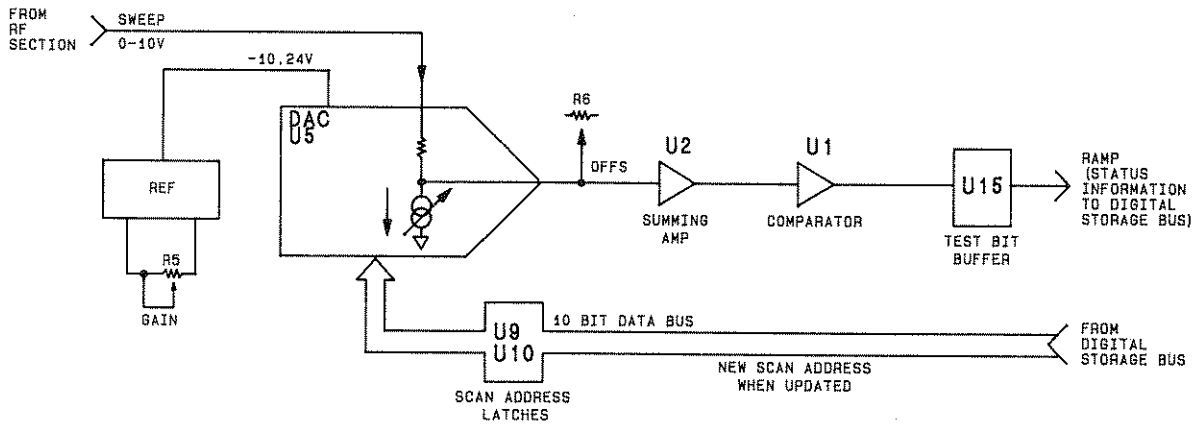

FIGURE 2. RAMP CONVERTER, SIMPLIFIED SCHEMATIC

A3A8 ANALOG-DIGITAL CONVERTER, TROUBLESHOOTING

The A3A8 Analog Digital Converter converts the analog video and sweep voltages to digital data. Consequently, a failure on this assembly will affect the display of Trace A and Trace B data. Character and graticule generation are not affected by A3A8.

Stuck bits in the Ramp Converter will distort the displayed signal. this is most easily observed with slow sweep times. When a bit fails, the Ramp Converter will default to a 20 msec sweep rate during the display period when that bit would normally be working. Figure 3 is an example of the CAL OUTPUT signal with a 3 sec sweep time when U5 pin 5 is stuck low.

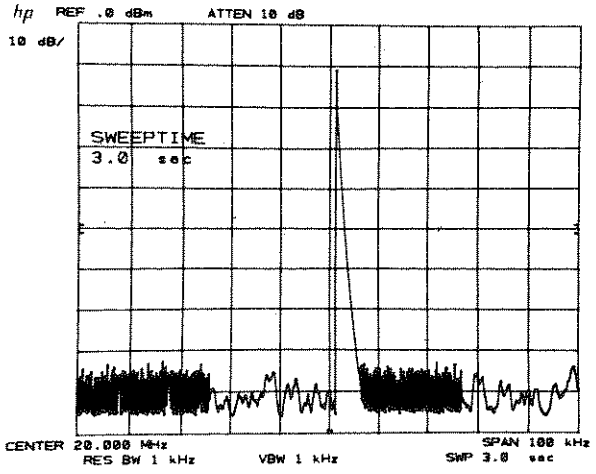

NOTE: Center Frequency Readout will be 100.000 000 MHz for an HP 8566B.

FIGURE 3. RAMP CONVERTER BIT FAILURE

By looking at noise with a 3-second sweep time (push Instrument Preset first), it is possible to determine which of the data bits are stuck by counting the discrete states displayed. For example, Figure 4 shows the result of an MSB failure (D9). $2^{10-9} = 2$ states are displayed. The ADC Check on the SA Diagram is then performed to isolate the failure to a single component. To detect low order bit (D0-D4) failures, tune to the CAL OUTPUT signal and set frequency span to 100 kHz, sweep time to 3 sec. A failure will then result in slight "stair-stepping" of the displayed signal. The noise display will be missing states, but this will be difficult to see.

Digital Storage Test Program 4 is used to verify the inputs to the DAC, U5.

Failures in the video analog to digital process are characterized by "stair-stepped" signals and noise that is displayed as discrete vertical lines. Low order bit failures will cause many small steps while a high order bit failure will cause a single step that will eliminate the peak of the display. Note that only the signal will be affected and that the graticules and characters will not be affected. Front panel displays of the CAL OUTPUT signal for several bit failures are shown in Figures 5 and 6.

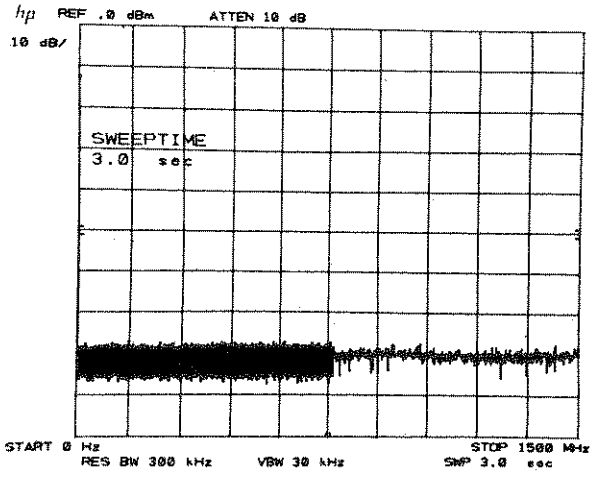

FIGURE 4. RAMP CONVERTER MSB FAILURE

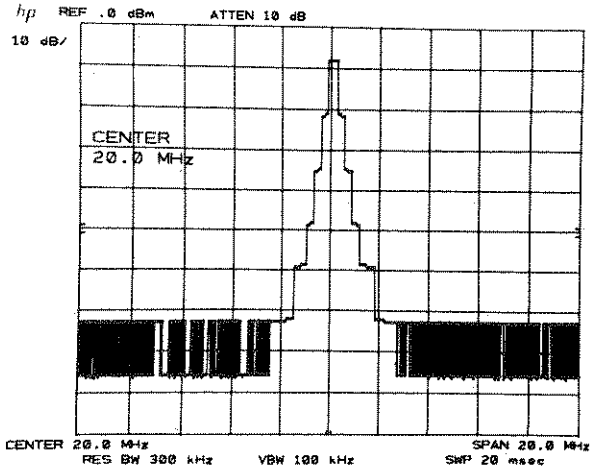

NOTE: Center Frequency Readout will be 100.000 000 MHz for an HP 8566B.

FIGURE 5. VIDEO ADC BIT 5 FAILURE

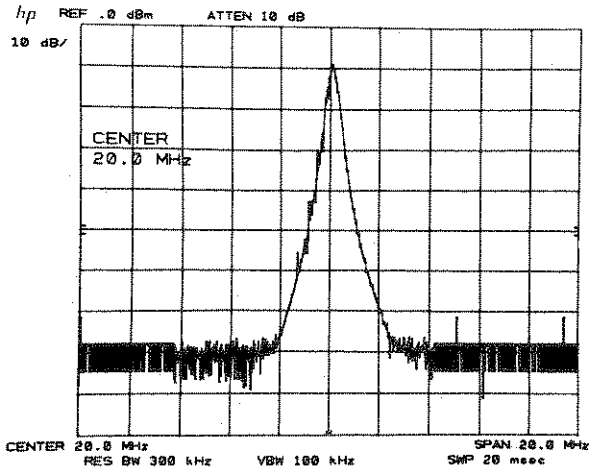

NOTE: Center Frequency Readout will be 100.000 000 MHz for an HP 8566B.

FIGURE 6. VIDEO ADC BIT 2 FAILURE

If the RAMP, HOLD or BUSY lines become stuck, the display will show a sweep related problem. If the analyzer is not sweeping, the Sweep System Troubleshooting notes should be consulted to help isolate the failure to a particular assembly.

Table 1 contains the display symptoms that result from failures of the RAMP, HOLD or BUSY lines.

TABLE 1. A3A8 SWEEP RELATED FAILURE SYMPTOMS

Line	Failure	
	Stuck High	Stuck Low
BUSY	Sweep LED on Line at bottom of display CK LED I on after Instrument Preset	Displayed signals noisy and similar to Figure 5
RAMP	Display jitter along x axis Frequency readout incorrect	Sweep LED on Line at bottom of display
HOLD	Line at top of display	Sweep LED on Line at bottom of display CK LED I on after Instrument Preset

Test Circuit

The test circuit on A3A8 is designed to aid in troubleshooting lower-order bit failures and linearity problems in both the Ramp Converter circuit and the ADC circuit. The test circuit is normally transparent to A3A8 operation, and is activated by grounding A3A8TP8 NOISE TEST or A3A8TP10 RAMP TEST to A3A8TP9 to switch multiplexers U16, U17, and U18.

Noise Test

The Noise Test, activated by grounding A3A8TP8 NOISE TEST to A3A8TP9, "expands" the vertical scale of the Digital Storage Section for closer examination of digital data from the the ADC circuit. This is accomplished by shifting the 4 least significant bits (LSBs) of the digitized video data by 6 bits, effectively multiplying it by 64. When the noise test is activated, the 6 most significant bits (MSBs) are not used, and the 6 LSBs are forced to logic 0. In addition, the "new" MSB is inverted to center the CRT trace (assuming the VIDEO input signal was at top-screen). The resulting CRT trace appears to be amplified to 64 times the normal resolution, allowing variations in the LSBs to be easily viewed.

With the noise test activated, a constant VIDEO signal present at the input to A3A9 Track and Hold will ideally produce a flat CRT trace. The CRT trace should exhibit no more than 2 bits peak-to-peak of digital noise.

Stuck ADC bits and transistor noise on A3A8 can be easily checked in the noise test mode by removing A3A9 Track and Hold from the instrument and jumpering A3A8TP2 SWP/100 to A3A8TP6 VIDEO. This substitutes a scaled-down sweep ramp signal for the VIDEO input signal to the ADC. A series of approximately 10 stair-steps should be displayed on the CRT, each with sharp, well-defined corners.

The noise test mode can be used to adjust the peak detector offsets (OFS POS and OFS NEG) on A3A9 Track and Hold by grounding A3A9TP3 to A3A9TP1, with the VIDEO cable (96) disconnected from A3A9J1. The CRT trace will fall on the bottom graticule line when both offsets on A3A9 are properly adjusted.

Ramp Test

The Ramp Test is very similar to the Noise Test, and is activated by grounding A3A8TP10 RAMP TEST to A3A8TP9. In addition, the VIDEO cable (96) is disconnected from A3A9J1, and A3A8TP1 SWP is jumpered to A3A9TP3 to substitute the sweep ramp signal as the VIDEO input to A3A9 Track and Hold. In the ramp test mode, the test circuit again "expands" the vertical CRT scale by a factor of 64. The 4 LSBs of digital scan data are subtracted from the 4 LSBs of digitized video data, and the results are displayed on the CRT. Since both sets of digital data correspond to the sweep ramp voltage, the subtraction ideally yields a constant value (011100000 = 448). If the Track and Hold, ADC, and Ramp Converter circuits are linear and functioning properly, a horizontal line will appear approximately ½-division below the center CRT graticule line. This line might exhibit numerous noise-like spikes in peak-detector mode, which is normal.

Linearity and noise in the Ramp Converter, ADC, and Track and Hold circuits can also be checked without using the ramp test. As before, disconnect the VIDEO cable (96) from A3A9J1 and jumper A3A8TP1 SWP to A3A9TP3. This substitutes the sweep ramp signal as the VIDEO input to A3A9 Track and Hold. A straight diagonal line should be displayed on the CRT, indicating linear digitizing of the analog sweep ramp signal by both the ADC and the Ramp Converter circuits.

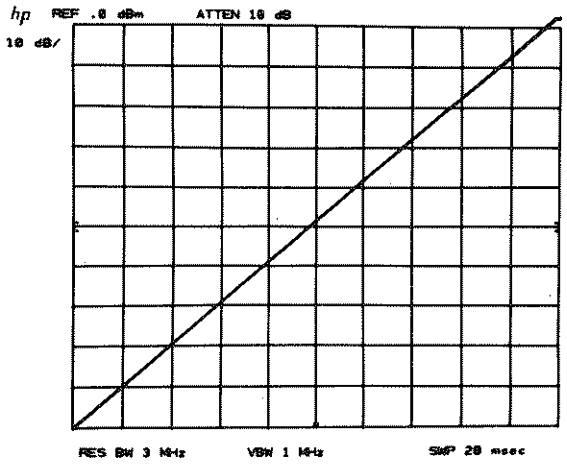

FIGURE 7. A3A8 DAC LINEARITY

TABLE 2. A3A8, REPLACEABLE PARTS (1 OF 2)

Reference Designation	HP Part Number	C D	Qty	Description	Mfr Code	Mfr Part Number
A3A8	85662-60130	7	1	BOARD ASSEMBLY, ANALOG-DIGITAL CONVERTER	28480	85662-60130
A3A8C1	0160-4814	2	1	CAPACITOR-FXD 150PF +-5% 100VDC CER	28480	0160-4814
A3A8C2	0160-4835	7	26	CAPACITOR-FXD .1UF +-10% 50VDC CER	28480	0160-4835
A3A8C3	0160-4835	7		CAPACITOR-FXD .1UF +-10% 50VDC CER	28480	0160-4835
A3A8C4	0160-4835	7		CAPACITOR-FXD .1UF +-10% 50VDC CER	28480	0160-4835
A3A8C5	0160-4835	7		CAPACITOR-FXD .1UF +-10% 50VDC CER	28480	0160-4835
A3A8C6	0160-4835	7		CAPACITOR-FXD .1UF +-10% 50VDC CER	28480	0160-4835
A3A8C7	0160-4835	7		CAPACITOR-FXD .1UF +-10% 50VDC CER	28480	0160-4835
A3A8C8	0160-4835	7		CAPACITOR-FXD .1UF +-10% 50VDC CER	28480	0160-4835
A3A8C9	0160-4835	7		CAPACITOR-FXD .1UF +-10% 50VDC CER	28480	0160-4835
A3A8C10	0160-4835	7		CAPACITOR-FXD .1UF +-10% 50VDC CER	28480	0160-4835
A3A8C11	0160-4835	7		CAPACITOR-FXD .1UF +-10% 50VDC CER	28480	0160-4835
A3A8C12	0160-4835	7		CAPACITOR-FXD .1UF +-10% 50VDC CER	28480	0160-4835
A3A8C13	0160-4835	7		CAPACITOR-FXD .1UF +-10% 50VDC CER	28480	0160-4835
A3A8C14	0160-4835	7		CAPACITOR-FXD .1UF +-10% 50VDC CER	28480	0160-4835
A3A8C15	0160-4835	7		CAPACITOR-FXD .1UF +-10% 50VDC CER	28480	0160-4835
A3A8C16	0160-4835	7		CAPACITOR-FXD .1UF +-10% 50VDC CER	28480	0160-4835
A3A8C17	0160-4835	7		CAPACITOR-FXD .1UF +-10% 50VDC CER	28480	0160-4835
A3A8C18	0160-4835	7		CAPACITOR-FXD .1UF +-10% 50VDC CER	28480	0160-4835
A3A8C19	0180-0229	7	1	CAPACITOR-FXD 33UF+-10% 10VDC TA	56289	150D336X9010B2
A3A8C20	0180-1746	5	2	CAPACITOR-FXD 15UF+-10% 20VDC TA	56289	150D156X9020B2
A3A8C21	0180-1746	5		CAPACITOR-FXD 15UF+-10% 20VDC TA	56289	150D156X9020B2
A3A8C22	0160-4835	7		CAPACITOR-FXD .1UF +-10% 50VDC CER	28480	0160-4835
A3A8C23	0160-4835	7		CAPACITOR-FXD .1UF +-10% 50VDC CER	28480	0160-4835
A3A8C24	0160-4835	7		CAPACITOR-FXD .1UF +-10% 50VDC CER	28480	0160-4835
A3A8C25	0160-4835	7		CAPACITOR-FXD .1UF +-10% 50VDC CER	28480	0160-4835
A3A8C26	0160-4835	7		CAPACITOR-FXD .1UF +-10% 50VDC CER	28480	0160-4835
A3A8C27	0160-4835	7		CAPACITOR-FXD .1UF +-10% 50VDC CER	28480	0160-4835
A3A8C28	0160-4835	7		CAPACITOR-FXD .1UF +-10% 50VDC CER	28480	0160-4835
A3A8C29	0160-4835	7		CAPACITOR-FXD .1UF +-10% 50VDC CER	28480	0160-4835
A3A8C30	0160-4835	7		CAPACITOR-FXD .1UF +-10% 50VDC CER	28480	0160-4835
A3A8CR1	1901-0535	9	6	DIODE-SM SIG SCHOTTKY	28480	1901-0535
A3A8CR2	1901-0535	9		DIODE-SM SIG SCHOTTKY	28480	1901-0535
A3A8CR3	1901-0535	9		DIODE-SM SIG SCHOTTKY	28480	1901-0535
A3A8CR4	1901-0535	9		DIODE-SM SIG SCHOTTKY	28480	1901-0535
A3A8CR5	1901-0535	9		DIODE-SM SIG SCHOTTKY	28480	1901-0535
A3A8CR6	1901-0535	9		DIODE-SM SIG SCHOTTKY	28480	1901-0535
A3A8E1	1460-1489	8	1	WIREFORM BE CU AG	28480	1460-1489
A3A8J1	1250-0543	8	1	CONNECTOR-RF SM-SNP M PC 50-OHM	28480	1250-0543
A3A8L1	08558-80011	6	1	FILTER COIL BLUE	28480	08558-80011
A3A8L2	9140-0114	4	2	INDUCTOR RF-CH-MLD 10UH 10% .166DX.385LG	28480	9140-0114
A3A8L3	9140-0114	4		INDUCTOR RF-CH-MLD 10UH 10% .166DX.385LG	28480	9140-0114
A3A8MP1				NOT ASSIGNED		
A3A8MP2	1480-0073	6	2	PIN-ROLL .062-IN-DIA .25-IN-LG BE-CU	28480	1480-0073
A3A8R1	0757-0280	3	2	RESISTOR 1K 1% .125W F TC=0+-100	24546	C4-1/8-T0-1001-F
A3A8R2	0757-0438	3	4	RESISTOR 5.11K 1% .125W F TC=0+-100	24546	C4-1/8-T0-5111-F
A3A8R3	0757-0438	3		RESISTOR 5.11K 1% .125W F TC=0+-100	24546	C4-1/8-T0-5111-F
A3A8R4	0757-0280	3		RESISTOR 1K 1% .125W F TC=0+-100	24546	C4-1/8-T0-1001-F
A3A8R5	2100-3123	0	1	RESISTOR-TRMR 500 10% C SIDE-ADJ 17-TRN	02111	43P501
A3A8R6	2100-3054	6	1	RESISTOR-TRMR 50K 10% C SIDE-ADJ 17-TRN	02111	43P503
A3A8R7	0698-6630	3	3	RESISTOR 20K .1% .125W F TC=0+-25	28480	0698-6630
A3A8R8	0757-0180	2	2	RESISTOR 31.6 1% .125W F TC=0+-100	28480	0757-0180
A3A8R9	0698-6630	3		RESISTOR 20K .1% .125W F TC=0+-25	28480	0698-6630
A3A8R10	0698-6630	3		RESISTOR 20K .1% .125W F TC=0+-25	28480	0698-6630
A3A8R11	0698-6320	8	5	RESISTOR 5K .1% .125W F TC=0+-25	03888	PME55-1/8-T9-5001-B
A3A8R12	0698-6320	8		RESISTOR 5K .1% .125W F TC=0+-25	03888	PME55-1/8-T9-5001-B
A3A8R13	0698-6320	8		RESISTOR 5K .1% .125W F TC=0+-25	03888	PME55-1/8-T9-5001-B
A3A8R14	0698-6320	8		RESISTOR 5K .1% .125W F TC=0+-25	03888	PME55-1/8-T9-5001-B
A3A8R15	0698-6361	7	1	RESISTOR 8K .1% .125W F TC=0+-25	28480	0698-6361
A3A8R16	0698-6320	8		RESISTOR 5K .1% .125W F TC=0+-25	03888	PME55-1/8-T9-5001-B
A3A8R17	0698-3152	8	1	RESISTOR 3.48K 1% .125W F TC=0+-100	24546	C4-1/8-T0-3481-F
A3A8R18	0757-0424	7	1	RESISTOR 1.1K 1% .125W F TC=0+-100	24546	C4-1/8-T0-1101-F
A3A8R19	0698-6360	6	1	RESISTOR 10K .1% .125W F TC=0+-25	28480	0698-6360
A3A8R20	0698-6323	1	1	RESISTOR 100 .1% .125W F TC=0+-25	28480	0698-6323
A3A8R21	0757-0428	1	1	RESISTOR 1.62K 1% .125W F TC=0+-100	24546	C4-1/8-T0-1621-F
A3A8R22	0757-0438	3		RESISTOR 5.11K 1% .125W F TC=0+-100	24546	C4-1/8-T0-5111-F
A3A8R23	0757-0438	3		RESISTOR 5.11K 1% .125W F TC=0+-100	24546	C4-1/8-T0-5111-F
A3A8R24	0757-0180	2		RESISTOR 31.6 1% .125W F TC=0+-100	28480	0757-0180

TABLE 2. A3A8, REPLACEABLE PARTS (2 OF 2)

Reference Designation	HP Part Number	C D	Qty	Description	Mfr Code	Mfr Part Number
A3A8TP1	0360-0535	0	11	TERMINAL TEST POINT PCB	00000	ORDER BY DESCRIPTION
A3A8TP2	0360-0535	0		TERMINAL TEST POINT PCB	00000	ORDER BY DESCRIPTION
A3A8TP3	0360-0535	0		TERMINAL TEST POINT PCB	00000	ORDER BY DESCRIPTION
A3A8TP4	0360-0535	0		TERMINAL TEST POINT PCB	00000	ORDER BY DESCRIPTION
A3A8TP5	0360-0535	0		TERMINAL TEST POINT PCB	00000	ORDER BY DESCRIPTION
A3A8TP6	0360-0535	0		TERMINAL TEST POINT PCB	00000	ORDER BY DESCRIPTION
A3A8TP7	0360-0535	0		TERMINAL TEST POINT PCB	00000	ORDER BY DESCRIPTION
A3A8TP8	0360-0535	0		TERMINAL TEST POINT PCB	00000	ORDER BY DESCRIPTION
A3A8TP9	0360-0535	0		TERMINAL TEST POINT PCB	00000	ORDER BY DESCRIPTION
A3A8TP10	0360-0535	0		TERMINAL TEST POINT PCB	00000	ORDER BY DESCRIPTION
A3A8TP11	0360-0535	0		TERMINAL TEST POINT PCB	00000	ORDER BY DESCRIPTION
A3A8U1	1826-0116	2	2	IC COMPARATOR GP TO-99 PKG	06665	CMP-01-CJ
A3A8U2	1826-0471	2	3	IC OP AMP LOW-DRIFT TO-99 PKG	28480	1826-0471
A3A8U3	1826-0471	2		IC OP AMP LOW-DRIFT TO-99 PKG	28480	1826-0471
A3A8U4	1826-0471	2		IC OP AMP LOW-DRIFT TO-99 PKG	28480	1826-0471
A3A8U5	1826-0684	9	1	IC CONV 12-B-D/A 18-DIP-C PKG	28480	1826-0684
A3A8U6	1820-1441	6	1	IC ADDR TTL LS BIN FULL ADDR 4-BIT	01295	SN74LS283N
A3A8U7	1820-1144	6	1	IC GATE TTL LS NOR QUAD 2-INP	01295	SN74LS02N
A3A8U8	1820-1199	1	1	IC INV TTL LS HEX 1-INP	01295	SN74LS04N
A3A8U9	1820-1196	8	2	IC FF TTL LS D-TYPE POS-EDGE-TRIG COM	01295	SN74LS174N
A3A8U10	1820-1196	8		IC FF TTL LS D-TYPE POS-EDGE-TRIG COM	01295	SN74LS174N
A3A8U11	1820-1984	2	1	IC CONV 10-B-D/A 16-DIP-C PKG	24355	AD561KD
A3A8U12	1826-0116	2		IC COMPARATOR GP TO-99 PKG	06665	CMP-01-CJ
A3A8U13	1820-1720	4	1	IC RGTR TTL 12-BIT	27014	DM2504CN
A3A8U13	1820-1978	4	1	IC RGTR TTL L 12-BIT NOTE: ALTERNATE FOR 1820-1720	34335	AM25L04PC
A3A8U14	1820-1282	3	1	IC FF TTL LS J-K BAR POS-EDGE-TRIG	01295	SN74LS109AN
A3A8U15	1820-1438	1	4	IC MUXR/DATA-SEL TTL LS 2-TO-1-LINE QUAD	01295	SN74LS257AN
A3A8U16	1820-1438	1		IC MUXR/DATA-SEL TTL LS 2-TO-1-LINE QUAD	01295	SN74LS257AN
A3A8U17	1820-1438	1		IC MUXR/DATA-SEL TTL LS 2-TO-1-LINE QUAD	01295	SN74LS257AN
A3A8U18	1820-1438	1		IC MUXR/DATA-SEL TTL LS 2-TO-1-LINE QUAD	01295	SN74LS257AN
A3A8VR1	1902-0686	3	1	DIODE-ZNR 6.2V 2% DO-7 PD=.4W TC=+.002%	04713	1N825
				MISCELLANEOUS PARTS		
	4040-0747	2	2	EXTR PC BD GRA	28480	4040-0747

A3A8
ANALOG-DIGITAL CONVERTER
85662-60130

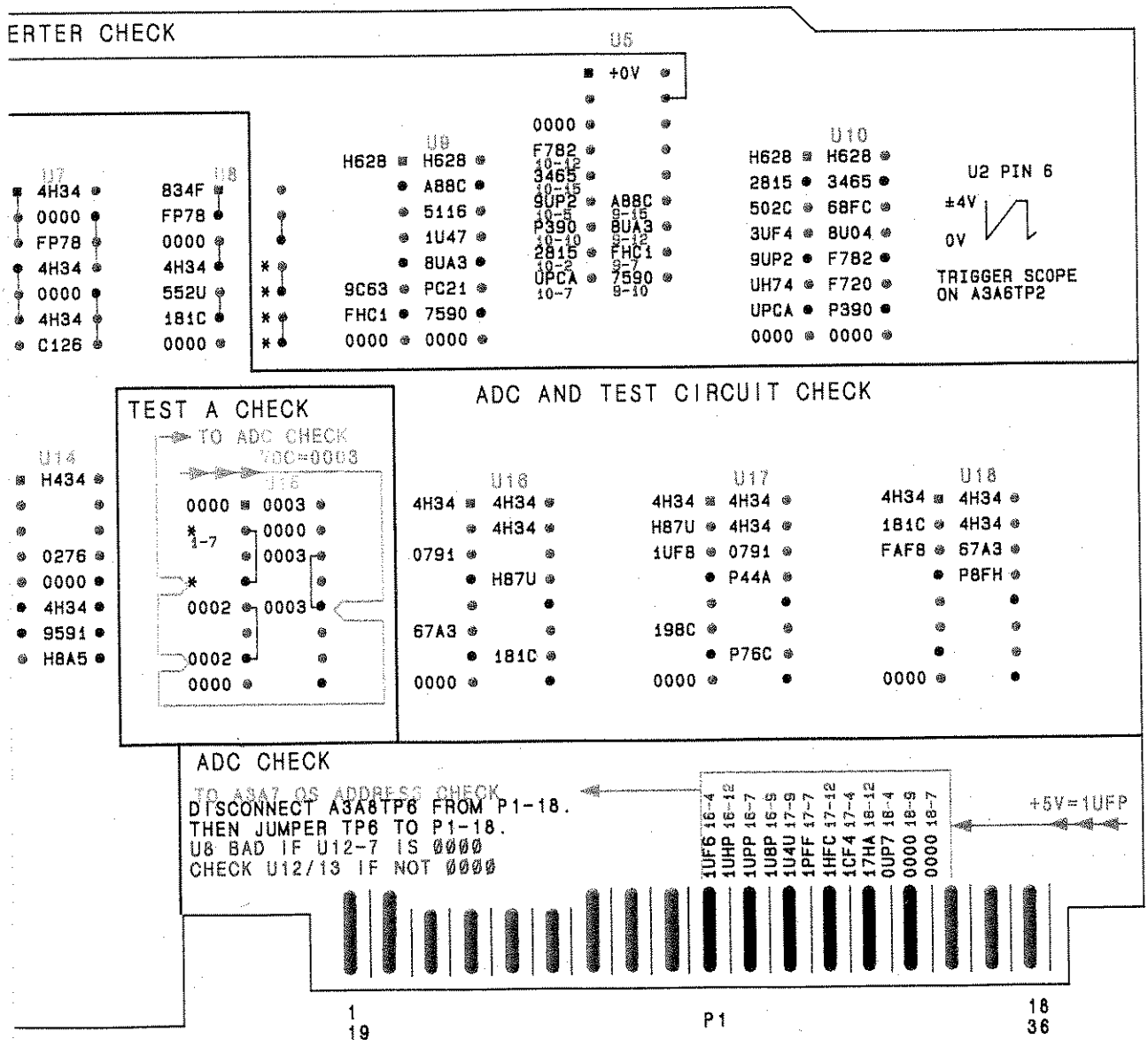

A3A8

FIGURE 8. A3A8 ANALOG-DIGITAL CONVERTER, SIGNATURE ANALYSIS TROUBLESHOOTING DIAGRAM

NOTE

- FOR INSTRUCTIONS ON THE USE OF SIGNATURE ANALYSIS DIAGRAMS READ THE SIGNATURE ANALYSIS DESCRIPTION SECTION OF THIS MANUAL.

ADC AND TEST CIRCUIT CHECK

SPECTRUM ANALYZER CONNECTIONS:
- REMOVE A3A9
- ADJUST A3A2R12 LL THRESH FULLY CW
- JUMPER A3A7TP3 TO A3A7TP6
- JUMPER A3A6TP3 TO A3A7TP6
- JUMPER A3A8TP6 (VIDEO) TO A3A8P1-18 (+15VDC)

SIGNATURE ANALYZER CONNECTIONS:
- CLOCK ⎍ TO A3A8P1-7 (1 MHZ)
- START ⎍ TO A3A6TP2
- STOP ⎍ TO A3A6TP2
- POD GND TO A3A6TP1
- PROBE GND TO A3A6TP9

PRESS:
- A3A7S1 AFTER COMPLETING CONNECTIONS FOR EACH TEST OR CHECK

RAMP CONVERTER CHECK

SPECTRUM ANALYZER CONNECTIONS:
- JUMPER A3A7TP3 TO A3A7TP6
- JUMPER A3A6TP3 TO A3A6TP6
- REMOVE W16 (SWEEP INPUT) FROM A3A8J1
- GROUND A3A8TP5 (SWEEP) TO A3A8TP4 (SHIELD)

SIGNATURE ANALYZER CONNECTIONS:
- CLOCK ⎍ TO A3A8P1-7 (1 MHZ)
- START ⎍ TO A3A6TP2
- STOP ⎍ TO A3A6TP2
- POD GND TO A3A6TP1
- PROBE GND TO A3A6TP9

PRESS:
- A3A7S1 AFTER COMPLETING CONNECTIONS FOR EACH TEST OR CHECK

ADC CHECK

SPECTRUM ANALYZER CONNECTIONS:
- CONNECT A3A7J1 JUMPER TO PINS 2 AND 13
- JUMPER A3A6TP3 TO A3A7TP6
- JUMPER A3A6TP3 TO A3A6TP6
- ADJUST A3A2R12 LL THRESH FULLY CW
- JUMPER A3A8TP6 (VIDEO) TO A3A8P1-18 (+15V)
- REMOVE A3A9

SIGNATURE ANALYZER CONNECTIONS:
- CLOCK ⎍ TO A3A8P1-7 (1 MHZ)
- START ⎍ TO A3A6TP2
- STOP ⎍ TO A3A6TP2
- POD GND TO A3A6TP1
- PROBE GND TO A3A6TP9

PRESS:
- A3A7S1 AFTER COMPLETING CONNECTIONS FOR EACH TEST OR CHECK

TEST A CHECK

SPECTRUM ANALYZER CONNECTIONS:
- CONNECT A3A7J1 JUMPER TO PINS 5 AND 10
- REMOVE W16 (SWEEP INPUT) FROM A3A8J1
- JUMPER A3A7TP3 TO A3A7TP6
- JUMPER A3A6TP3 TO A3A6TP6
- JUMPER A3A8TP5 (SWEEP) TO A3A8TP4 (SHIELD)
- REMOVE A3A9

SIGNATURE ANALYZER CONNECTIONS:
- CLOCK ⎍ TO A3A7P1
- START ⎍ TO A3A6TP2
- STOP ⎍ TO A3A6TP2
- POD GND TO A3A6TP1
- PROBE GND TO A3A6TP9

PRESS:
- A3A7S1 AFTER COMPLETING CONNECTIONS FOR EACH TEST OR CHECK

AN

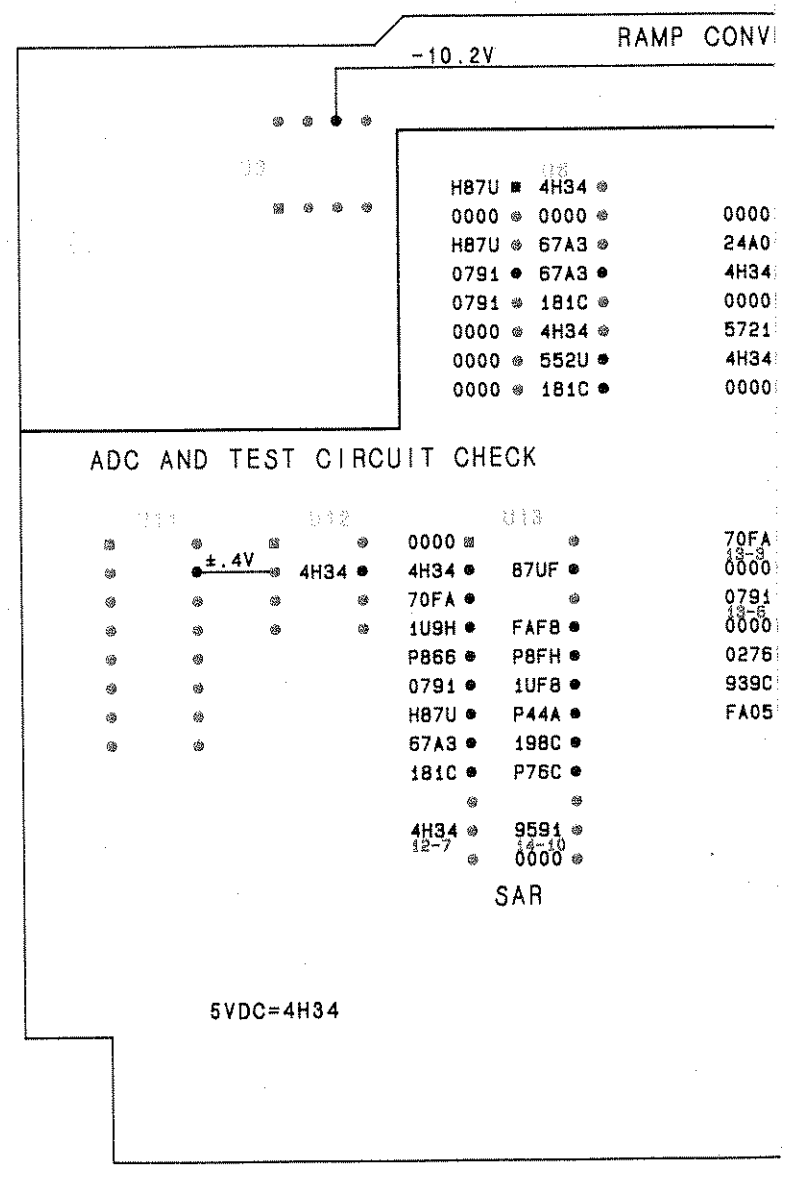

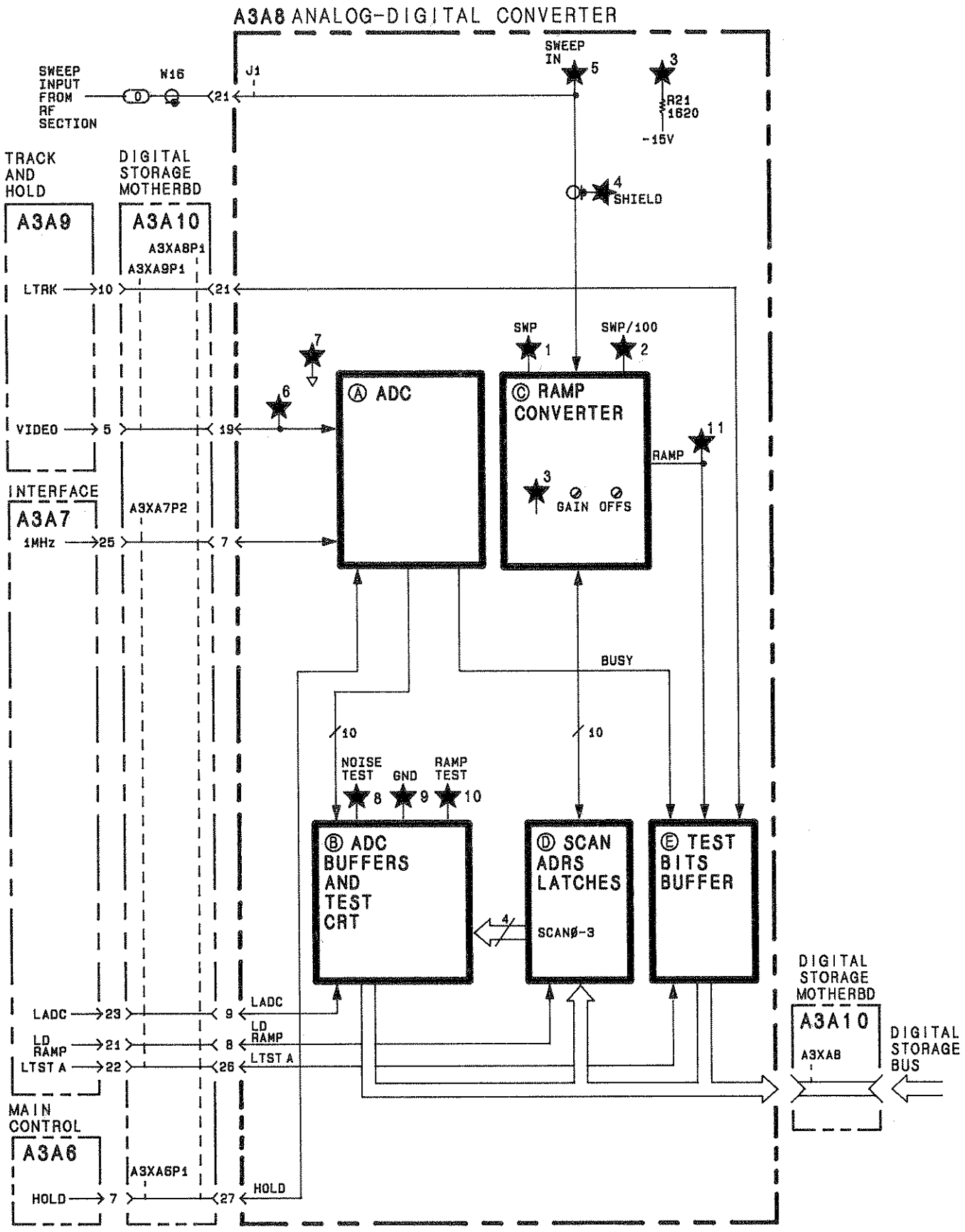

FIGURE 9. A3A8 ANALOG-DIGITAL CONVERTER, BLOCK DIAGRAM

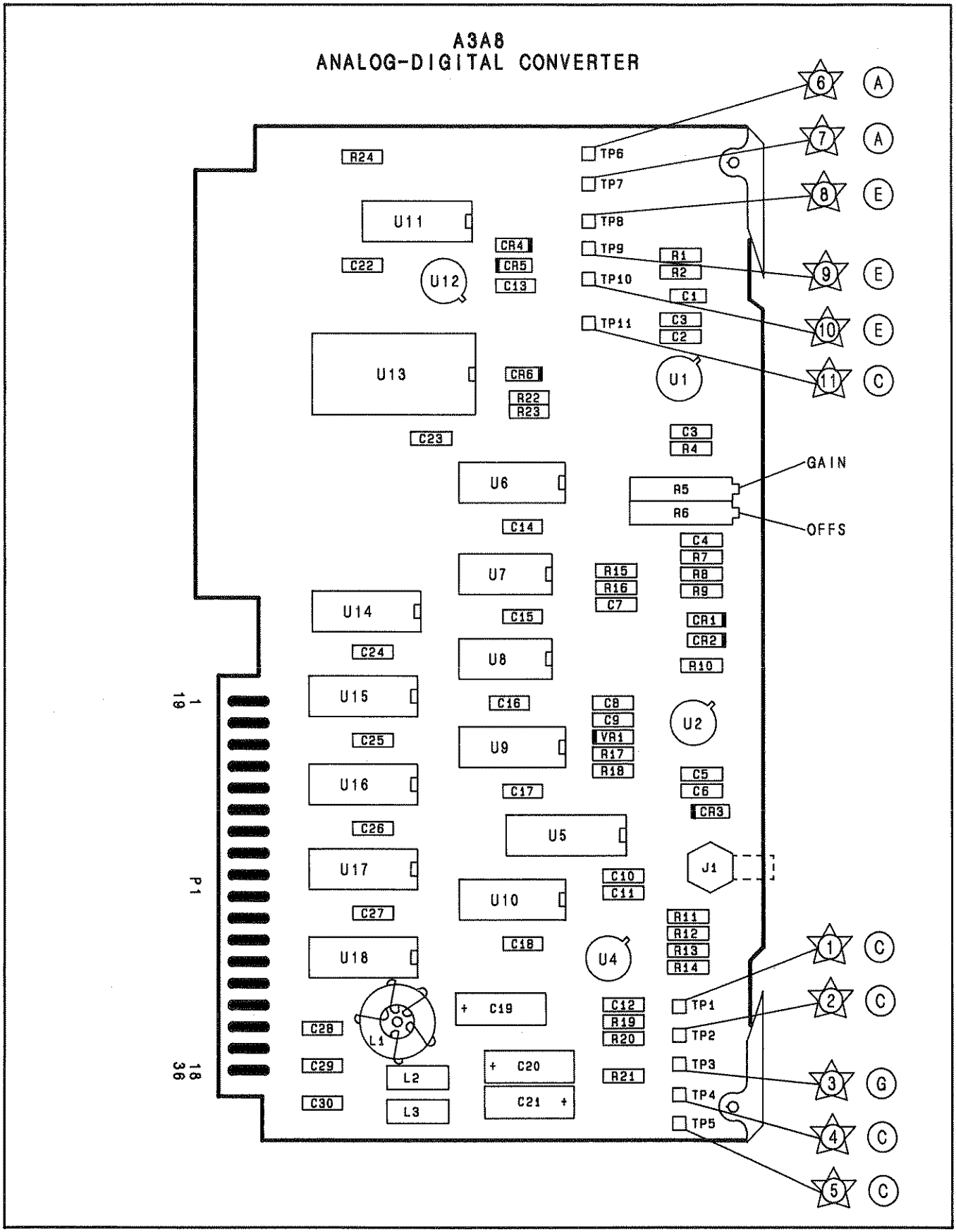

FIGURE 10. A3A8 ANALOG-DIGITAL CONVERTER, COMPONENT LOCATIONS

SIGNAL	TO/FROM	FUNCTION BLOCK
		G
0	A3A9P1-5	A
		G
		G
	A3A9P1-10	B
	A3A7P2-25	A
MP	A3A7P2-21	D
A	A3A7P2-22	B
	A3A7P2-23	E
	A3A6P1-7	A
		E
		E
		E
		E
	DIGITAL STORAGE BUS	E
		E
		E
		E
		G
		G
		G
		G

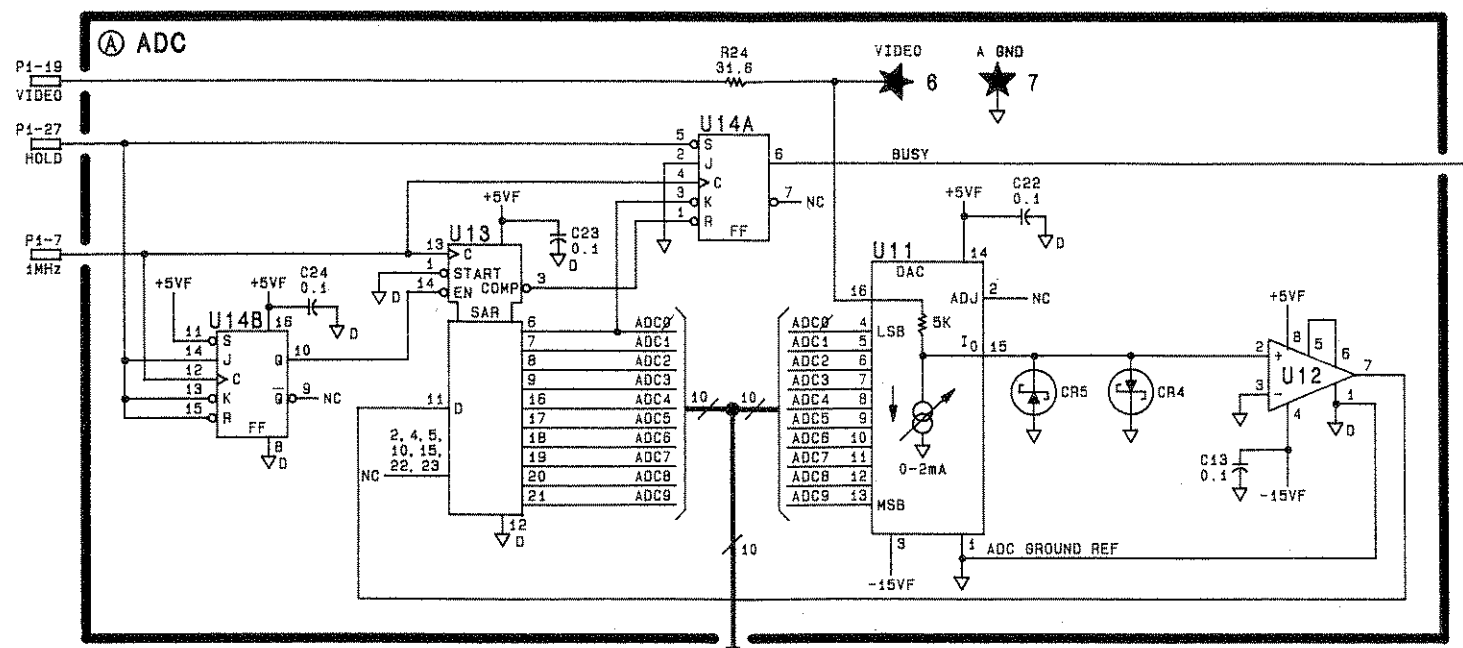

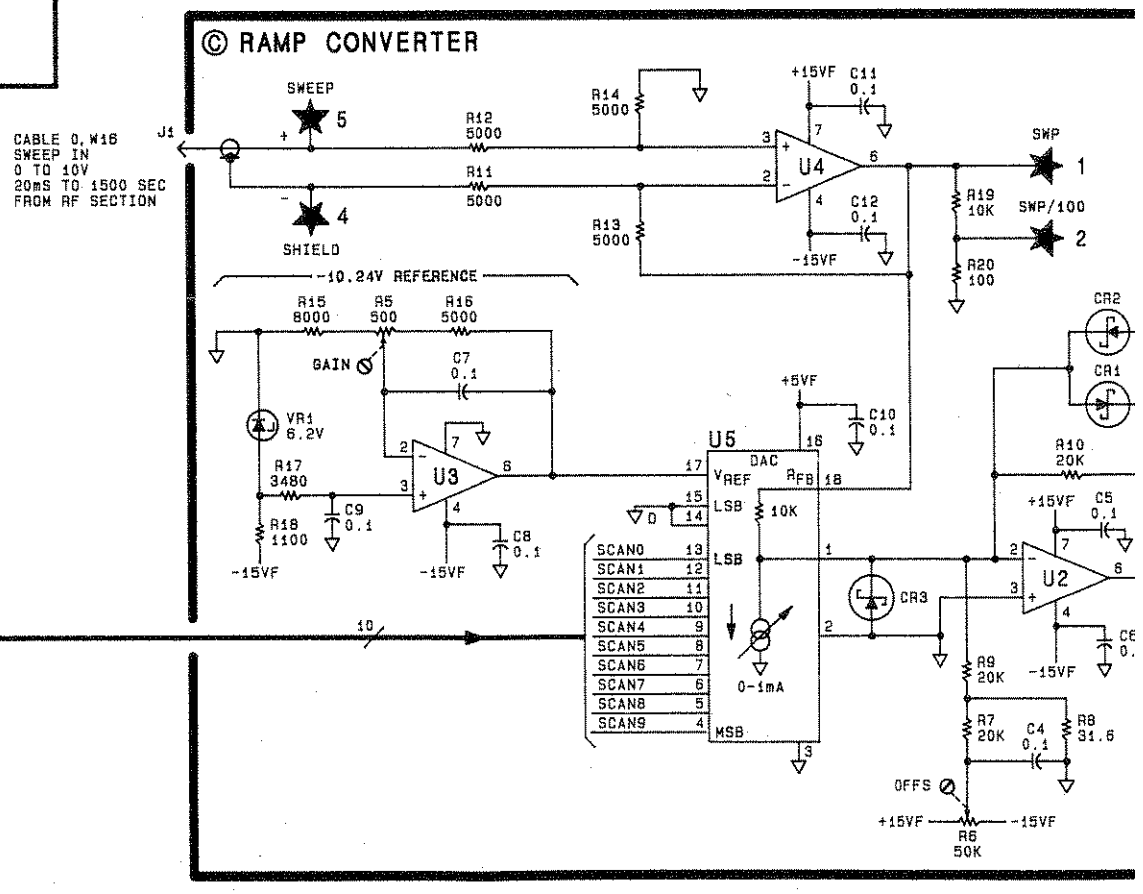

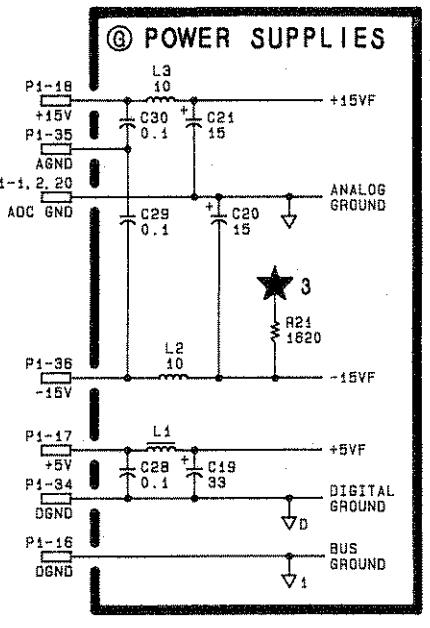

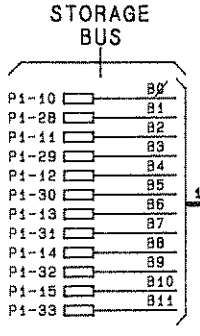

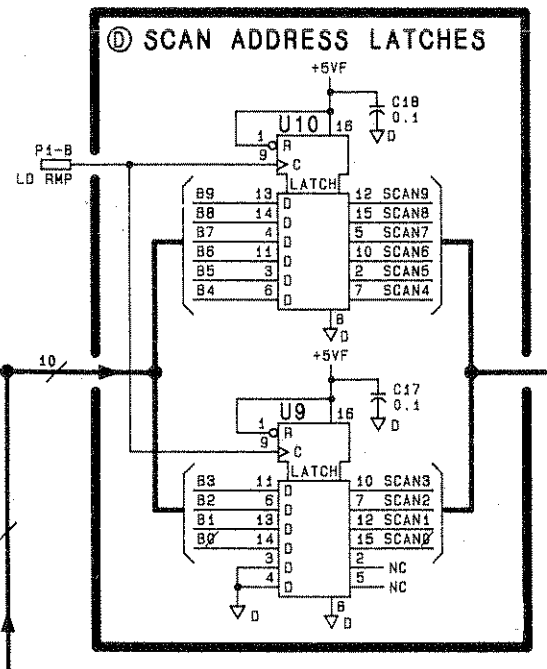

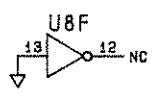

PREFIX: 2403A

DISPLAY SECTION

NOTES:

1. REFERENCE DESIGNATORS WITHIN THIS ASSEMBLY ARE ABBREVIATED. FOR COMPLETE REFERENCE DESIGNATION, PREFIX ABBREVIATION WITH ASSEMBLY DESIGNATION.
2. UNLESS OTHERWISE INDICATED: RESISTANCE IS IN OHMS (Ω) CAPACITANCE IS IN MICROFARADS (μF) INDUCTANCE IS IN MICROHENRIES (μH)
3. UNLESS OTHERWISE INDICATED, SIGNALS ENTER AT LEFT SIDE AND EXIT AT RIGHT SIDE OF FUNCTION BLOCKS.
4. MNEMONIC TABLE:

MNEMONIC	DESCRIPTION
LADC	LOADS ADC OUTPUT ONTO DIGITAL STORAGE BUS
AGND	ANALOG GROUND
B0-B11	DIGITAL STORAGE BUS BITS 0-11
DGND	DIGITAL GROUND
HOLD	HOLD: CONTROLS TRACK/ HOLD MODE, INITIATES DATA A/D CONVERSION
LDRMP	LOADS RAMP CONVERTER DAC
LTSTA	LOAD TEST BITS ONTO DIGITAL STORAGE BUS
LTRK	LOW=VIDEO TRACKING
COMP	COMPLETE
BUSY	CONVERSION IN PROCESS
RAMP	TIME FOR NEXT CONVERSION

A3A8

FIGURE 11. A3A8 ANALOG-DIGITAL CONVERTER, SCHEMATIC DIAGRAM

A3A9 TRACK AND HOLD, CIRCUIT DESCRIPTION

A3A9 Track and Hold provides circuitry to insure that the true peak of the RF signal and a true representation of noise are displayed on the CRT. This is accomplished by positive and negative peak detection.

Positive Peak Detector (A)

The Positive Peak Detector acquires the most positive voltage to appear at its input and holds that voltage on holding capacitor C26 until the circuit is reset by a reset pulse from the decoding and timing circuits. FET Q6 is periodically turned on by the reset pulse, discharging C26 through R12 and Q6 to ground. Figure 1 shows a simplified schematic of the Positive Peak Detector.

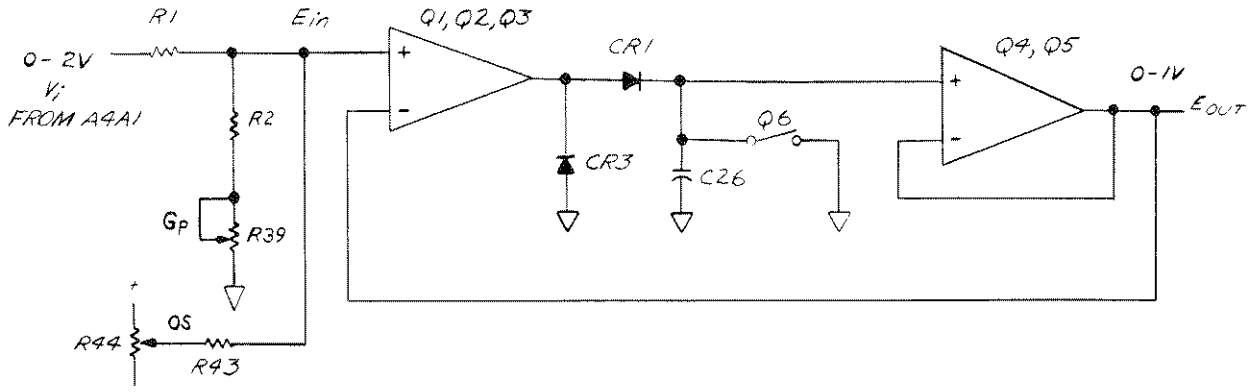

FIGURE 1. POSITIVE PEAK DETECTOR, SIMPLIFIED SCHEMATIC

The circuit consists of amplifier Q3, Q2, Q1, diode CR1, holding capacitor C26, and buffer Q4, Q5. When E_{in} is less than the feedback voltage E_{out}, CR1 is off and C26 will hold the voltage it has acquired. CR3 limits the reverse voltage across CR1 to minimize leakage current. CR1 turns on when E_{in} is greater than E_{out}, and C26 charges to equalize E_{in} and E_{out}.

A pair of matched FETs, Q4A and Q4B, and emitter follower Q5 are used in the buffer circuit. Q4A is used as a source follower and Q4B as a current source. The Q4A bias current is equal to the algebraic sum of the current from Q4B, the base current to Q3B, and the bias current through R13. This sum of currents insures a very small gate-to-source voltage and prevents gate-to-source forward biasing.

Q1, Q2, and Q3 are all dual transistors. Q3 and Q2 form the input stage, with Q3 connected as emitter followers and Q2 forming a differential pair. Gain for the differential stage is set by collector resistor R7. Additional gain is provided by Q1B. Q1B is connected as a transistor inverter with R9 in the emitter and R8 in the collector. Q1A is connected as a diode. Gain and offset adjustments for the Positive Peak Detector are performed in the resistor divider that includes R1 and R2. GPOS potentiometer R39 adjusts the attenuation so that a 2V full-scale input produces a 1V full-scale output. OFS POS potentiometer R44 zeroes the output with 0V input. U5 compares the input and output of the Peak Detector. A TTL high level is produced when the output is greater than the input. (R40, R41, and R16 provide a small amount of hysteresis for noise immunity.)

Negative Peak Detector (B)

The Negative Peak Detector acquires the most negative voltage to appear at its input and holds that voltage on holding capacitor C38 until reset by a pulse from the decoding and timing circuits. Circuit operation is the same as that of the Positive Peak Detector except that supply polarities are reversed and PNP instead of NPN transistors are used. Figure 2 shows a simplified schematic of the Negative Peak Detector.

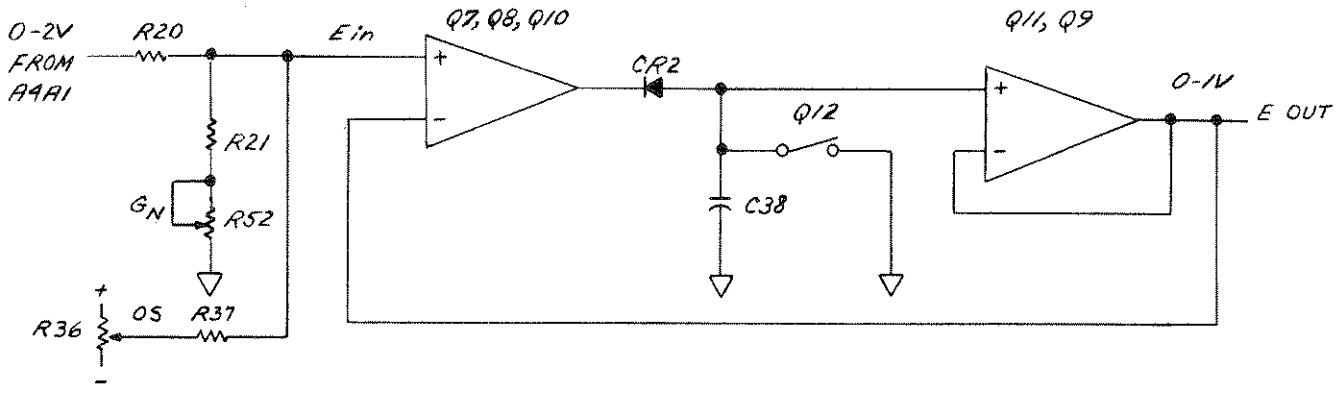

FIGURE 2. NEGATIVE PEAK DETECTOR, SIMPLIFIED SCHEMATIC

The circuit consists of amplifier Q7/Q8/Q10, diode CR2, holding capacitor C38, buffer Q11/Q9, and reset transistor Q12. R71 creates an offset between the output and the emitter of Q9. This insures that the voltage across C38 is always negative for positive outputs from 0V to +1V. GNEG potentiometer R52 sets the gain (input attenuation) so that a 2V full-scale input produces a 1V full-scale output. OFS NEG potentiometer R36 zeroes the offset. U4 compares the input to the output.

Decoding and Timing (C)

The Decoding and Timing circuit provides reset pulses to the Peak Detectors and control lines for Multiplexer selection, and it performs other logic functions.

U9 decodes control lines SEL A and SEL B to produce three lines for Multiplexer selection. After inversion by U8A, U8B, and U8C, the voltage levels are shifted to −0.5V and +9V. Multivibrators U12A and U12B produce pulses (when triggered by HOLD) which reset the Peak Detectors. Latches U13A and U13B are used to provide the Peak Detector status signal LTRK.

Multiplexer (D)

The outputs of the Peak Detectors are multiplexed through U1 before sampling by the Track and Hold circuit. Control lines to the Multiplexer are provided by the Decoding and Timing circuit.

Track and Hold (E)

The Track and Hold circuit samples the signal appearing at the output of multiplexer U1 and holds the voltage on capacitor C15. The output of the Track and Hold circuit is used in A3A8 Analog-Digital Converter, where it is converted into Y-axis graph data. A simplified schematic of the Track and Hold circuit is shown in Figure 3.

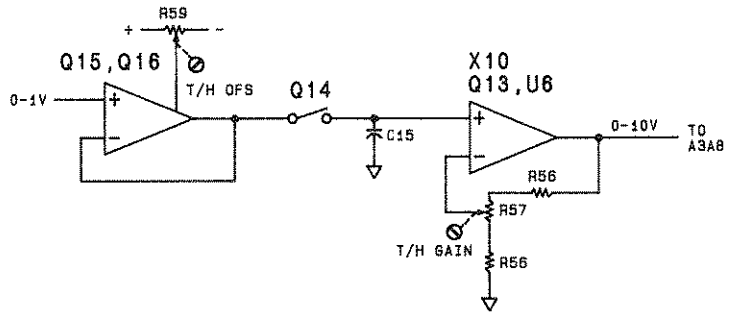

FIGURE 3. TRACK AND HOLD CIRCUIT, SIMPLIFIED SCHEMATIC

Q16 and Q15 form a buffer amplifier. Q14 switches on and off to open or close a path between the amplifier and holding capacitor C15. A FET input amplifier (Q13, U6) amplifies the capacitor voltage by a factor of 10. The gain is set by T/H GAIN potentiometer R57. Offset is adjusted by controlling the current flow through R67 with (T/H) OFS potentiometer R59.

A3A9 TRACK AND HOLD, TROUBLESHOOTING

Display problems which involve only the video are often caused by malfunctions on either A3A8 Analog-Digital Converter or the A3A9 Track and Hold. The blue [SHIFT] key functions and the Digital Storage Test Patterns can be used to isolate the failure.

Figure 4 shows the Digital Storage Test Pattern. Refer to the A3 Digital Storage Troubleshooting section to generate the test pattern. The three vertical lines represent the detector outputs on A3A9. The left one is the negative peak detector, the center one is the sampling mode and the right one is the positive peak detector. These should move up and down when a VIDEO signal is present at A3A9J1, indicating normal operation. If one is stuck, the blue [SHIFT] key can be used to verify this.

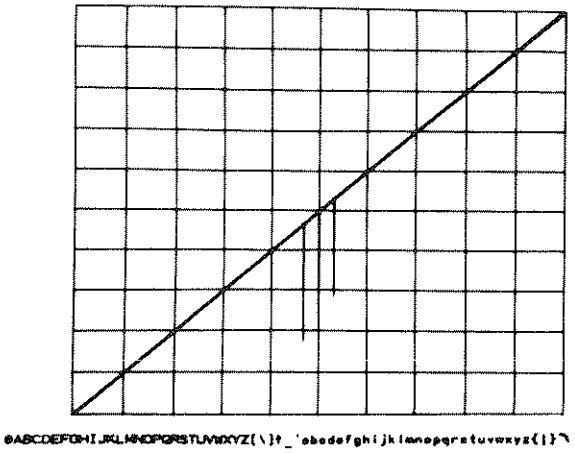

FIGURE 4. DIGITAL STORAGE TEST PATTERN

Slight stair-stepping of the diagonal line could be caused by a low order bit failure on A3A8 or a noisy component on A3A9. To isolate the assemblies remove A3A9, jumper A3A8TP1 to A3A8TP6 and push Instrument Preset. The Display is a diagonal line. If the diagonal line is not stair-stepped or noisy, the problem is on A3A9.

Noise on the peaks of the displayed signals is most often caused by leakage in Q6 or Q14. This is very noticeable in 0 Hz frequency spans. To determine whether Q6 or Q14 is defective, sampling detection is used. [SHIFT] TRACE A [BLANK] (KSe) puts the instrument in the sampling mode. A noisy signal when using the sampling mode generally indicates a defective Q14. A defective Q6 produces noise in the normal detection mode and in the positive peak detection mode, [SHIFT] TRACE A [MAX HOLD] (KSb).

Proper operation of the detectors can be tested with the following sequence.

CLEAR-WRITE TRACE B
Instrument Preset
RECALL 8
SHIFT TRACE A MAX HOLD ..... Positive Peak Detection
VIEW TRACE B

SHIFT TRACE A VIEW ..... Negative Peak Detection
(both traces coincide)

SHIFT TRACE A BLANK ..... Sampling Mode
(both traces coincide)

If the traces do not coincide in the above test, refer to the Track and Hold adjustments in the Performance Tests and Adjustments manual.

If the voltage on A3A9TP8 is correct and that of A3A9TP9 is incorrect when performing the BIAS Check of Note 10 on the schematic, check to see if the drain and source voltages on Q14 are approximately + 1V. If not, Q14 is most likely open.

The LTRK signal is verified using an oscilloscope. Following an Instrument Preset, set the spectrum analyzer sweeptime to 75 msec. Figure 5 shows the resultant waveform.

Oscilloscope settings:
Sweeptime: 50 ms/div
Analyzer Sweeptime: 75 ms

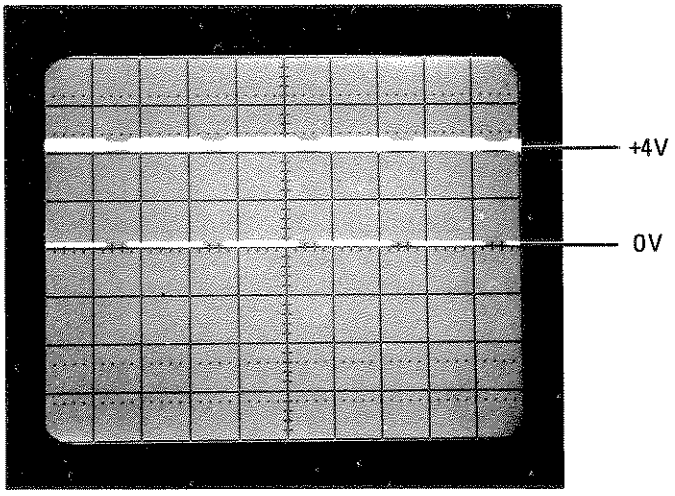

FIGURE 5. LTRK TIMING WAVEFORM

The Decoding and Timing **(C)** is checked using an oscilloscope. Figure 6 shows the timing waveforms when using Digital Storage Test Program 5. When Digital Storage Test Program 6 is used, HOLD is normally high. It goes low every 80 msec. The two reset lines are then active only every 80 msec. Figure 5 shows the LTRK line for a sweeptime of 75 msec following an Instrument Preset.

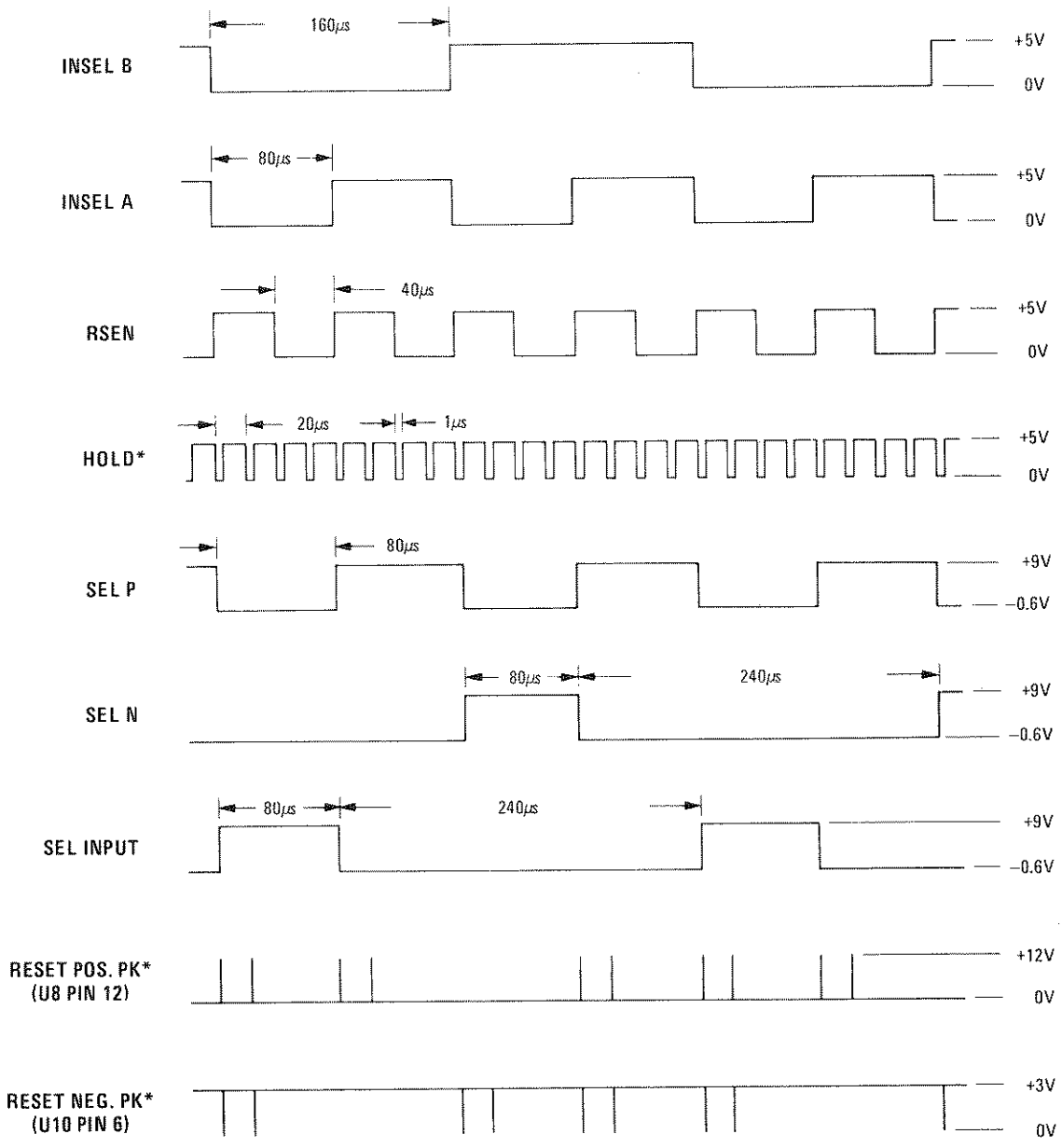

* For Test Program 6, HOLD is normally high, going low only every 80 msec which resets the peak detectors (RESET POS, PK and RESET NEG. PK). All other waveforms remain the same as for Test Program 5.

FIGURE 6. A3A9 TIMING WAVEFORMS USING DIGITAL STORAGE TEST PROGRAM 5

TABLE 1. A3A9, REPLACEABLE PARTS (1 OF 3)

Reference Designation	HP Part Number	C D	Qty	Description	Mfr Code	Mfr Part Number
A3A9	05662-60151	2	1	BOARD ASSEMBLY TRACK/HOLD	28480	05662-60151
A3A9C1	0160-4835	7	33	CAPACITOR-FXD .1UF +-10% 50VDC CER	28480	0160-4835
A3A9C2	0160-4835	7		CAPACITOR-FXD .1UF +-10% 50VDC CER	28480	0160-4835
A3A9C3	0180-1746	5	4	CAPACITOR-FXD 15UF+-10% 20VDC TA	56289	150D156X9020B2
A3A9C4	0180-1746	5		CAPACITOR-FXD 15UF+-10% 20VDC TA	56289	150D156X9020B2
A3A9C5				NOT ASSIGNED		
A3A9C6				NOT ASSIGNED		
A3A9C7	0180-0229	7	1	CAPACITOR-FXD 33UF+-10% 10VDC TA	56289	150D336X9010B2
A3A9C8	0160-4835	7		CAPACITOR-FXD .1UF +-10% 50VDC CER	28480	0160-4835
A3A9C9	0160-4835	7		CAPACITOR-FXD .1UF +-10% 50VDC CER	28480	0160-4835
A3A9C10	0160-4835	7		CAPACITOR-FXD .1UF +-10% 50VDC CER	28480	0160-4835
A3A9C11	0180-0197	8	1	CAPACITOR-FXD 2.2UF+-10% 20VDC TA	56289	150D225X9020A2
A3A9C12	0160-4835	7		CAPACITOR-FXD .1UF +-10% 50VDC CER	28480	0160-4835
A3A9C13	0160-4832	4	4	CAPACITOR-FXD .01UF +-10% 100VDC CER	28480	0160-4832
A3A9C14	0160-4835	7		CAPACITOR-FXD .1UF +-10% 50VDC CER	28480	0160-4835
A3A9C15	0160-3536	3	1	CAPACITOR-FXD 620PF +-5% 100VDC MICA	28480	0160-3536
A3A9C16	0160-4835	7		CAPACITOR-FXD .1UF +-10% 50VDC CER	28480	0160-4835
A3A9C17	0160-4835	7		CAPACITOR-FXD .1UF +-10% 50VDC CER	28480	0160-4835
A3A9C18	0160-4801	7	3	CAPACITOR-FXD 100PF +-5% 100VDC CER	28480	0160-4801
A3A9C19	0160-4801	7		CAPACITOR-FXD 100PF +-5% 100VDC CER	28480	0160-4801
A3A9C20	0160-4835	7		CAPACITOR-FXD .1UF +-10% 50VDC CER	28480	0160-4835
A3A9C21	0160-4835	7		CAPACITOR-FXD .1UF +-10% 50VDC CER	28480	0160-4835
A3A9C22	0160-4835	7		CAPACITOR-FXD .1UF +-10% 50VDC CER	28480	0160-4835
A3A9C23	0160-4832	4		CAPACITOR-FXD .01UF +-10% 100VDC CER	28480	0160-4832
A3A9C24	0160-4835	7		CAPACITOR-FXD .1UF +-10% 50VDC CER	28480	0160-4835
A3A9C25	0160-4835	7		CAPACITOR-FXD .1UF +-10% 50VDC CER	28480	0160-4835
A3A9C26	0160-0945	2	2	CAPACITOR-FXD 910PF +-5% 100VDC MICA	28480	0160-0945
A3A9C27	0160-4835	7		CAPACITOR-FXD .1UF +-10% 50VDC CER	28480	0160-4835
A3A9C28				NOT ASSIGNED		
A3A9C29				NOT ASSIGNED		
A3A9C30	0160-4835	7		CAPACITOR-FXD .1UF +-10% 50VDC CER	28480	0160-4835
A3A9C31	0160-4835	7		CAPACITOR-FXD .1UF +-10% 50VDC CER	28480	0160-4835
A3A9C32	0160-4835	7		CAPACITOR-FXD .1UF +-10% 50VDC CER	28480	0160-4835
A3A9C33	0160-4835	7		CAPACITOR-FXD .1UF +-10% 50VDC CER	28480	0160-4835
A3A9C34	0160-4835	7		CAPACITOR-FXD .1UF +-10% 50VDC CER	28480	0160-4835
A3A9C35	0160-4835	7		CAPACITOR-FXD .1UF +-10% 50VDC CER	28480	0160-4835
A3A9C36	0160-4835	7		CAPACITOR-FXD .1UF +-10% 50VDC CER	28480	0160-4835
A3A9C37	0160-4835	7		CAPACITOR-FXD .1UF +-10% 50VDC CER	28480	0160-4835
A3A9C38	0160-0945	2		CAPACITOR-FXD 910PF +-5% 100VDC MICA	28480	0160-0945
A3A9C39	0160-4832	4		CAPACITOR-FXD .01UF +-10% 100VDC CER	28480	0160-4832
A3A9C40	0160-4835	7		CAPACITOR-FXD .1UF +-10% 50VDC CER	28480	0160-4835
A3A9C41	0160-4835	7		CAPACITOR-FXD .1UF +-10% 50VDC CER	28480	0160-4835
A3A9C42	0160-4812	0	1	CAPACITOR-FXD 220PF +-5% 100VDC CER	28480	0160-4812
A3A9C43	0160-4808	4	1	CAPACITOR-FXD 470PF +-5% 100VDC CER	28480	0160-4808
A3A9C44	0160-4801	7		CAPACITOR-FXD 100PF +-5% 100VDC CER	28480	0160-4801
A3A9C45	0160-4832	4		CAPACITOR-FXD .01UF +-10% 100VDC CER	28480	0160-4832
A3A9C46	0160-4835	7		CAPACITOR-FXD .1UF +-10% 50VDC CER	28480	0160-4835
A3A9C47	0160-4835	7		CAPACITOR-FXD .1UF +-10% 50VDC CER	28480	0160-4835
A3A9C48	0180-1746	5		CAPACITOR-FXD 15UF+-10% 20VDC TA	56289	150D156X9020B2
A3A9C49	0180-1746	5		CAPACITOR-FXD 15UF+-10% 20VDC TA	56289	150D156X9020B2
A3A9C50	0160-4835	7		CAPACITOR-FXD .1UF +-10% 50VDC CER	28480	0160-4835
A3A9C51	0160-4835	7		CAPACITOR-FXD .1UF +-10% 50VDC CER	28480	0160-4835
A3A9C52	0160-4835	7		CAPACITOR-FXD .1UF +-10% 50VDC CER	28480	0160-4835
A3A9C53	0160-4835	7		CAPACITOR-FXD .1UF +-10% 50VDC CER	28480	0160-4835
A3A9C54	0160-4835	7		CAPACITOR-FXD .1UF +-10% 50VDC CER	28480	0160-4835
A3A9C55	0160-4835	7		CAPACITOR-FXD .1UF +-10% 50VDC CER	28480	0160-4835
A3A9CR1	1901-0376	6	2	DIODE-GEN PRP 35V 50MA DO-35	28480	1901-0376
A3A9CR2	1901-0376	6		DIODE-GEN PRP 35V 50MA DO-35	28480	1901-0376
A3A9CR3	1901-0535	9	2	DIODE-SM SIG SCHOTTKY	28480	1901-0535
A3A9CR4	1901-0033	2	1	DIODE-GEN PRP 180V 200MA DO-7	28480	1901-0033
A3A9CR5	1901-0535	9		DIODE-SM SIG SCHOTTKY	28480	1901-0535
A3A9J1	1250-0543	8	2	CONNECTOR-RF SM-SNP M PC 50-OHM	28480	1250-0543
A3A9J2	1250-0543	8		CONNECTOR-RF SM-SNP M PC 50-OHM	28480	1250-0543
A3A9L1	9140-0096	1	1	INDUCTOR RF-CH-MLD 1UH 10% .166DX.385LG	28480	9140-0096
A3A9L2	9100-1629	4	4	INDUCTOR RF-CH-MLD 47UH 5% .166DX.385LG	28480	9100-1629
A3A9L3	9100-1629	4		INDUCTOR RF-CH-MLD 47UH 5% .166DX.385LG	28480	9100-1629
A3A9L4	9140-0210	1	1	INDUCTOR RF-CH-MLD 100UH 5% .166DX.385LG	28480	9140-0210
A3A9L5	9100-1629	4		INDUCTOR RF-CH-MLD 47UH 5% .166DX.385LG	28480	9100-1629
A3A9L6	9100-1629	4		INDUCTOR RF-CH-MLD 47UH 5% .166DX.385LG	28480	9100-1629
A3A9Q1	1853-0075	9	2	TRANSISTOR-DUAL PNP PD=400MW	28480	1853-0075
A3A9Q2	1854-0712	3	2	TRANSISTOR-DUAL NPN PD=1.8W	28480	1854-0712
A3A9Q3	1854-0712	3		TRANSISTOR-DUAL NPN PD=1.8W	28480	1854-0712
A3A9Q4	1855-0050	4	3	TRANSISTOR-JFET DUAL N-CHAN D-MODE SI	28480	1855-0050
A3A9Q5	1854-0019	3	1	TRANSISTOR NPN SI TO-18 PD=360MW	28480	1854-0019

TABLE 1. A3A9, REPLACEABLE PARTS (2 OF 3)

Reference Designation	HP Part Number	CD	Qty	Description	Mfr Code	Mfr Part Number
A3A9Q6	1855-0241	5	2	TRANSISTOR MOSFET N-CHAN E-MODE TO-72 SI	18324	SD215
A3A9Q7	1853-0316	1	1	TRANSISTOR-DUAL PNP PD=500MW	28480	1853-0316
A3A9Q8	1853-0075	9		TRANSISTOR-DUAL PNP PD=400MW	28480	1853-0075
A3A9Q9	1853-0034	0	1	TRANSISTOR PNP SI TO-18 PD=360MW	28480	1853-0034
A3A9Q10	1854-0475	5	2	TRANSISTOR-DUAL NPN PD=750MW	28480	1854-0475
A3A9Q11	1855-0050	4		TRANSISTOR-JFET DUAL N-CHAN D-MODE SI	28480	1855-0050
A3A9Q12	1853-0322	9	1	TRANSISTOR PNP 2N2946A SI TO-46 PD=400MW	01295	2N2946A
A3A9Q13	1855-0050	4		TRANSISTOR-JFET DUAL N-CHAN D-MODE SI	28480	1855-0050
A3A9Q14	1855-0241	5		TRANSISTOR MOSFET N-CHAN E-MODE TO-72 SI	18324	SD215
A3A9Q15	1854-0404	0	1	TRANSISTOR NPN SI TO-18 PD=360MW	28480	1854-0404
A3A9Q16	1854-0475	5		TRANSISTOR-DUAL NPN PD=750MW	28480	1854-0475
A3A9R1	0698-6377	5	6	RESISTOR 200 .1% .125W F TC=0+-25	28480	0698-6377
A3A9R2	0698-6377	5		RESISTOR 200 .1% .125W F TC=0+-25	28480	0698-6377
A3A9R3	0757-0442	9	8	RESISTOR 10K 1% .125W F TC=0+-100	24546	C4-1/8-T0-1002-F
A3A9R4	0757-0438	3	4	RESISTOR 5.11K 1% .125W F TC=0+-100	24546	C4-1/8-T0-5111-F
A3A9R5	0757-0442	9		RESISTOR 10K 1% .125W F TC=0+-100	24546	C4-1/8-T0-1002-F
A3A9R6	0757-0280	3	11	RESISTOR 1K 1% .125W F TC=0+-100	24546	C4-1/8-T0-1001-F
A3A9R7	0757-0274	5	2	RESISTOR 1.21K 1% .125W F TC=0+-100	24546	C4-1/8-T0-1211-F
A3A9R8	0698-0083	8	1	RESISTOR 1.96K 1% .125W F TC=0+-100	24546	C4-1/8-T0-1961-F
A3A9R9	0698-3446	7	1	RESISTOR 196 1% .125W F TC=0+-100	24546	C4-1/8-T0-196R-F
A3A9R10	0757-0442	9		RESISTOR 10K 1% .125W F TC=0+-100	24546	C4-1/8-T0-1002-F
A3A9R11	0757-0442	9		RESISTOR 10K 1% .125W F TC=0+-100	24546	C4-1/8-T0-1002-F
A3A9R12	0757-0346	2	3	RESISTOR 10 1% .125W F TC=0+-100	24546	C4-1/8-T0-10R0-F
A3A9R13	0757-0465	6	1	RESISTOR 100K 1% .125W F TC=0+-100	24546	C4-1/8-T0-1003-F
A3A9R14	0757-0279	0	4	RESISTOR 3.16K 1% .125W F TC=0+-100	24546	C4-1/8-T0-3161-F
A3A9R15	0698-3157	3	7	RESISTOR 19.6K 1% .125W F TC=0+-100	24546	C4-1/8-T0-1962-F
A3A9R16	0698-3157	3		RESISTOR 19.6K 1% .125W F TC=0+-100	24546	C4-1/8-T0-1962-F
A3A9R17	0698-6377	5		RESISTOR 200 .1% .125W F TC=0+-25	28480	0698-6377
A3A9R18	0698-6377	5		RESISTOR 200 .1% .125W F TC=0+-25	28480	0698-6377
A3A9R19				NOT ASSIGNED		
A3A9R20	0698-6377	5		RESISTOR 200 .1% .125W F TC=0+-25	28480	0698-6377
A3A9R21	0698-6377	5		RESISTOR 200 .1% .125W F TC=0+-25	28480	0698-6377
A3A9R22	0757-0442	9		RESISTOR 10K 1% .125W F TC=0+-100	24546	C4-1/8-T0-1002-F
A3A9R23	0757-0438	3		RESISTOR 5.11K 1% .125W F TC=0+-100	24546	C4-1/8-T0-5111-F
A3A9R24	0757-0442	9		RESISTOR 10K 1% .125W F TC=0+-100	24546	C4-1/8-T0-1002-F
A3A9R25	0757-0280	3		RESISTOR 1K 1% .125W F TC=0+-100	24546	C4-1/8-T0-1001-F
A3A9R26	0757-0274	5		RESISTOR 1.21K 1% .125W F TC=0+-100	24546	C4-1/8-T0-1211-F
A3A9R27	0757-0438	3		RESISTOR 5.11K 1% .125W F TC=0+-100	24546	C4-1/8-T0-5111-F
A3A9R28	0757-0416	7	2	RESISTOR 511 1% .125W F TC=0+-100	24546	C4-1/8-T0-511R-F
A3A9R29	0698-3157	3		RESISTOR 19.6K 1% .125W F TC=0+-100	24546	C4-1/8-T0-1962-F
A3A9R30	0698-3157	3		RESISTOR 19.6K 1% .125W F TC=0+-100	24546	C4-1/8-T0-1962-F
A3A9R31	0757-0401	0	3	RESISTOR 100 1% .125W F TC=0+-100	24546	C4-1/8-T0-101-F
A3A9R32	0757-0279	0		RESISTOR 3.16K 1% .125W F TC=0+-100	24546	C4-1/8-T0-3161-F
A3A9R33	0698-3157	3		RESISTOR 19.6K 1% .125W F TC=0+-100	24546	C4-1/8-T0-1962-F
A3A9R34	0698-0084	9	1	RESISTOR 2.15K 1% .125W F TC=0+-100	24546	C4-1/8-T0-2151-F
A3A9R35	0757-0279	0		RESISTOR 3.16K 1% .125W F TC=0+-100	24546	C4-1/8-T0-3161-F
A3A9R36	2100-3161	6	2	RESISTOR-TRMR 20K 10% C SIDE-ADJ 17-TRN	02111	43P203
A3A9R37	0757-0462	3	2	RESISTOR 75K 1% .125W F TC=0+-100	24546	C4-1/8-T0-7502-F
A3A9R38	0698-6323	1	3	RESISTOR 100 .1% .125W F TC=0+-25	28480	0698-6323
A3A9R39	2100-3164	9	2	RESISTOR-TRMR 10 20% C SIDE-ADJ 17-TRN	02111	43P100
A3A9R40	0698-3136	8	2	RESISTOR 17.8K 1% .125W F TC=0+-100	24546	C4-1/8-T0-1782-F
A3A9R41	0757-0401	0		RESISTOR 100 1% .125W F TC=0+-100	24546	C4-1/8-T0-101-F
A3A9R42	0757-0401	0		RESISTOR 100 1% .125W F TC=0+-100	24546	C4-1/8-T0-101-F
A3A9R43	0757-0462	3		RESISTOR 75K 1% .125W F TC=0+-100	24546	C4-1/8-T0-7502-F
A3A9R44	2100-3161	6		RESISTOR-TRMR 20K 10% C SIDE-ADJ 17-TRN	02111	43P203
A3A9R45	0698-6323	1		RESISTOR 100 .1% .125W F TC=0+-25	28480	0698-6323
A3A9R46	0698-3136	8		RESISTOR 17.8K 1% .125W F TC=0+-100	24546	C4-1/8-T0-1782-F
A3A9R47	0698-6320	8	1	RESISTOR 5K .1% .125W F TC=0+-25	03888	PME55-1/8-T9-5001-B
A3A9R48	0757-0289	2	1	RESISTOR 13.3K 1% .125W F TC=0+-100	19701	MF4C1/8-T0-1332-F
A3A9R49	0757-0448	7	1	RESISTOR 7.5K 1% .125W F TC=0+-100	24546	C4-1/8-T0-7501-F
A3A9R50	0757-1094	9	1	RESISTOR 1.47K 1% .125W F TC=0+-100	24546	C4-1/8-T0-1471-F
A3A9R51	0757-0280	3		RESISTOR 1K 1% .125W F TC=0+-100	24546	C4-1/8-T0-1001-F
A3A9R52	2100-3164	9		RESISTOR-TRMR 10 20% C SIDE-ADJ 17-TRN	02111	43P100
A3A9R53	0698-0085	0	1	RESISTOR 2.61K 1% .125W F TC=0+-100	24546	C4-1/8-T0-2611-F
A3A9R54	0698-3157	3		RESISTOR 19.6K 1% .125W F TC=0+-100	24546	C4-1/8-T0-1962-F
A3A9R55	0698-3157	3		RESISTOR 19.6K 1% .125W F TC=0+-100	24546	C4-1/8-T0-1962-F
A3A9R56	0698-8298	3	1	RESISTOR 1.071K .25% .125W F TC=0+-25	19701	MF4C1/8-T9-1071R-C
A3A9R57	2100-3757	6	1	RESISTOR-TRMR 100 10% C SIDE-ADJ 17-TRN	28480	2100-3757
A3A9R58	0698-3451	0	1	RESISTOR 133K 1% .125W F TC=0+-100	24546	C4-1/8-T0-1333-F
A3A9R59	2100-3750	9	1	RESISTOR-TRMR 20K 10% C SIDE-ADJ 17-TRN	28480	2100-3750
A3A9R60	0699-1024	1	1	RESISTOR 10K .01% .125W F TC=0+-10	28480	0699-1024
A3A9R61	0757-0441	8	1	RESISTOR 8.25K 1% .125W F TC=0+-100	24546	C4-1/8-T0-8251-F
A3A9R62	0757-0346	2		RESISTOR 10 1% .125W F TC=0+-100	24546	C4-1/8-T0-10R0-F
A3A9R63	0757-0346	2		RESISTOR 10 1% .125W F TC=0+-100	24546	C4-1/8-T0-10R0-F
A3A9R64	0757-0279	0		RESISTOR 3.16K 1% .125W F TC=0+-100	24546	C4-1/8-T0-3161-F
A3A9R65	0757-0280	3		RESISTOR 1K 1% .125W F TC=0+-100	24546	C4-1/8-T0-1001-F

TABLE 1. A3A9, REPLACEABLE PARTS (3 OF 3)

Reference Designation	HP Part Number	C D	Qty	Description	Mfr Code	Mfr Part Number
A3A9R66				NOT ASSIGNED		
A3A9R67	0757-0416	7		RESISTOR 511 1% .125W F TC=0+-100	24546	C4-1/8-T0-511R-F
A3A9R68	0698-8872	9	1	RESISTOR 532 .25% .125W F TC=0+-100	28480	0698-8872
A3A9R69	0757-0442	9		RESISTOR 10K 1% .125W F TC=0+-100	24546	C4-1/8-T0-1002-F
A3A9R70	0757-0280	3		RESISTOR 1K 1% .125W F TC=0+-100	24546	C4-1/8-T0-1001-F
A3A9R71				NOT ASSIGNED		
A3A9R72	0757-0438	3		RESISTOR 5.11K 1% .125W F TC=0+-100	24546	C4-1/8-T0-5111-F
A3A9R73	0757-0280	3		RESISTOR 1K 1% .125W F TC=0+-100	24546	C4-1/8-T0-1001-F
A3A9R74	0757-0442	9		RESISTOR 10K 1% .125W F TC=0+-100	24546	C4-1/8-T0-1002-F
A3A9R75	0698-6323	1		RESISTOR 100 .1% .125W F TC=0+-25	28480	0698-6323
A3A9R76	0698-3156	2	5	RESISTOR 14.7K 1% .125W F TC=0+-100	24546	C4-1/8-T0-1472-F
A3A9R77	0757-0280	3		RESISTOR 1K 1% .125W F TC=0+-100	24546	C4-1/8-T0-1001-F
A3A9R78	0698-3156	2		RESISTOR 14.7K 1% .125W F TC=0+-100	24546	C4-1/8-T0-1472-F
A3A9R79	0757-0280	3		RESISTOR 1K 1% .125W F TC=0+-100	24546	C4-1/8-T0-1001-F
A3A9R80	0698-3156	2		RESISTOR 14.7K 1% .125W F TC=0+-100	24546	C4-1/8-T0-1472-F
A3A9R81	0757-0280	3		RESISTOR 1K 1% .125W F TC=0+-100	24546	C4-1/8-T0-1001-F
A3A9R82	0698-3156	2		RESISTOR 14.7K 1% .125W F TC=0+-100	24546	C4-1/8-T0-1472-F
A3A9R83	0757-0280	3		RESISTOR 1K 1% .125W F TC=0+-100	24546	C4-1/8-T0-1001-F
A3A9R84	0698-3156	2		RESISTOR 14.7K 1% .125W F TC=0+-100	24546	C4-1/8-T0-1472-F
A3A9R85	0757-0280	3		RESISTOR 1K 1% .125W F TC=0+-100	24546	C4-1/8-T0-1001-F
A3A9R86	0698-3150	6	5	RESISTOR 2.37K 1% .125W F TC=0+-100	24546	C4-1/8-T0-2371-F
A3A9R87	0698-3150	6		RESISTOR 2.37K 1% .125W F TC=0+-100	24546	C4-1/8-T0-2371-F
A3A9R88	0698-3150	6		RESISTOR 2.37K 1% .125W F TC=0+-100	24546	C4-1/8-T0-2371-F
A3A9R89	0698-3150	6		RESISTOR 2.37K 1% .125W F TC=0+-100	24546	C4-1/8-T0-2371-F
A3A9R90	0698-3150	6		RESISTOR 2.37K 1% .125W F TC=0+-100	24546	C4-1/8-T0-2371-F
A3A9TP1	0360-0535	0	4	TERMINAL TEST POINT PCB	00000	ORDER BY DESCRIPTION
A3A9TP2	0360-0535	0		TERMINAL TEST POINT PCB	00000	ORDER BY DESCRIPTION
A3A9TP3	0360-0535	0		TERMINAL TEST POINT PCB	00000	ORDER BY DESCRIPTION
A3A9TP4-A3A9TP8				NOT ASSIGNED		
A3A9TP9	0360-0535	0		TERMINAL TEST POINT PCB	00000	ORDER BY DESCRIPTION
A3A9U1	1826-0415	4	1	IC SWITCH ANLG QUAD 16-DIP-P PKG	18324	SD5000B
A3A9U2				NOT ASSIGNED		
A3A9U3				NOT ASSIGNED		
A3A9U4	1826-0026	3	2	IC COMPARATOR PRCN TO-99 PKG	01295	LM311L
A3A9U5	1826-0026	3		IC COMPARATOR PRCN TO-99 PKG	01295	LM311L
A3A9U6	1826-0089	8	1	IC OP AMP WB TO-99 PKG	29832	1322
A3A9U7				NOT ASSIGNED		
A3A9U8	1820-0471	0	1	IC INV TTL HEX 1-INP	01295	SN7406N
A3A9U9	1820-1201	2	1	IC DCDR TTL LS 2-TO-4-LINE DUAL 2-INP	01295	SN74LS139N
A3A9U10	1820-1202	7	1	IC GATE TTL LS NAND TPL 3-INP	01295	SN74LS10N
A3A9U11	1820-1197	9	1	IC GATE TTL LS NAND QUAD 2-INP	01295	SN74LS00N
A3A9U12	1820-1423	4	1	IC MV TTL LS MONOSTBL RETRIG DUAL	01295	SN74LS123N
A3A9U13	1820-1112	8	1	IC FF TTL LS D-TYPE POS-EDGE-TRIG	01295	SN74LS74AN
A3A9U14	1826-0601	0	2	IC OP AMP PRCN TO-99 PKG	06665	OP-16FJ
A3A9U15	1826-0601	0		IC OP AMP PRCN TO-99 PKG	06665	OP-16FJ
				MISCELLANEOUS PARTS		
	4040-0756	3	2	EXTR PC BD WHT	28480	4040-0756

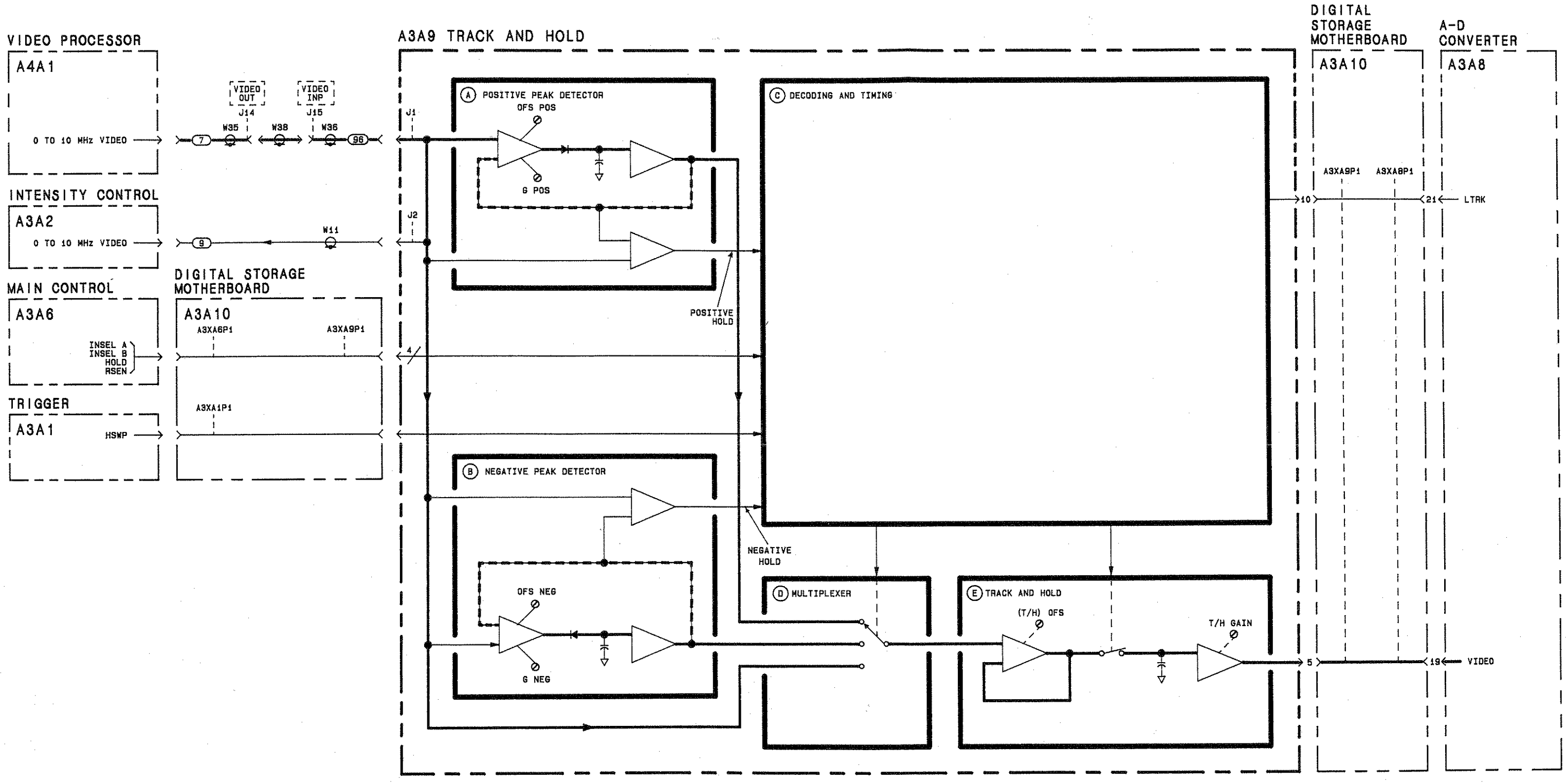

A3A9

FIGURE 7. A3A9 TRACK AND HOLD, BLOCK DIAGRAM

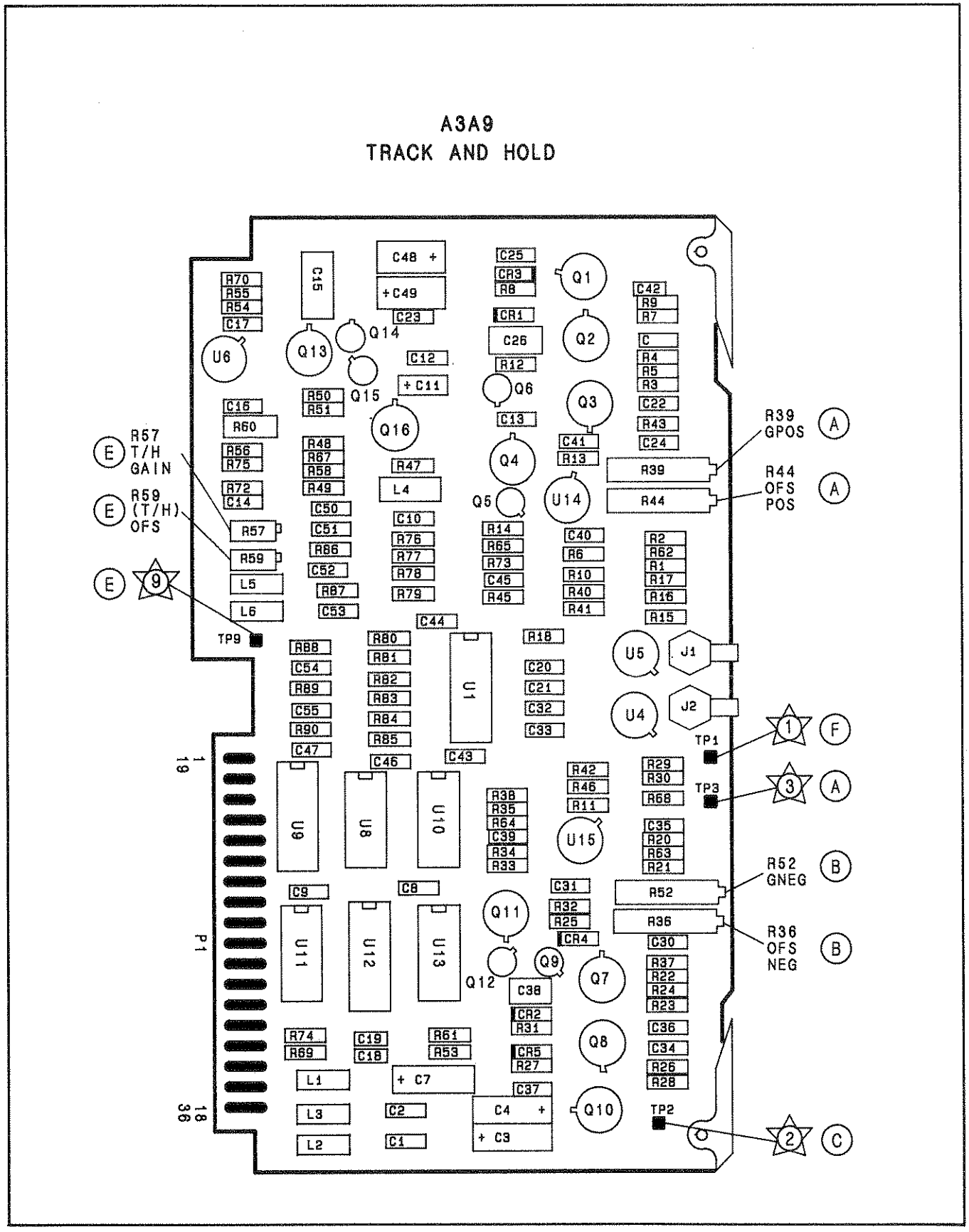

FIGURE 8. A3A9 TRACK AND HOLD, COMPONENT LOCATIONS

A3A9 TRACK AND HOLD
85662-60151

SIGNAL	TO/FROM	FUNCTION BLOCK
NC		
NC		
NC		
NC		
NC		
NC		
GND		F
GND		F
VIDEO	A3A8P1-19	E
GND		F
GND		F
GND		F
NC		
NC		
NC		
NC		
NC		
NC		
NC		
NC		
LTRK	A3A8P1-21	C
NC		
NC		
NC		
INSEL B	A3A6P1-6	C
RSEN	A3A5P1-12	C
INSEL A	A3A6P1-23	C
HSWP	A3A1P1-21	C
NC		
NC		
HOLD	A3A6P1-7	C
NC		
D GND		F
D GND		F
+5V		F
NC		
-15V		F
-15V		F

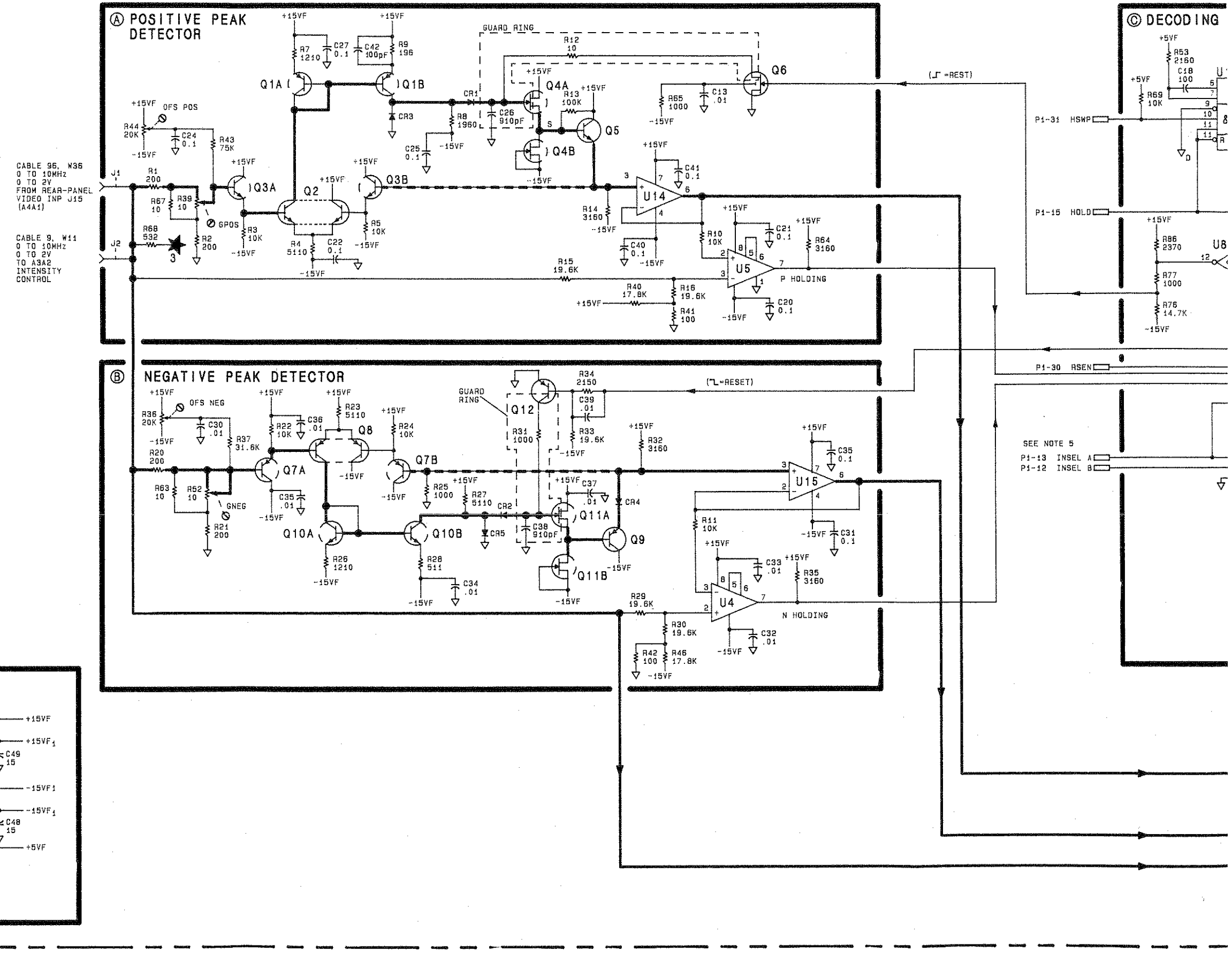

IAL PREFIX: 2403A

DISPLAY SECTION

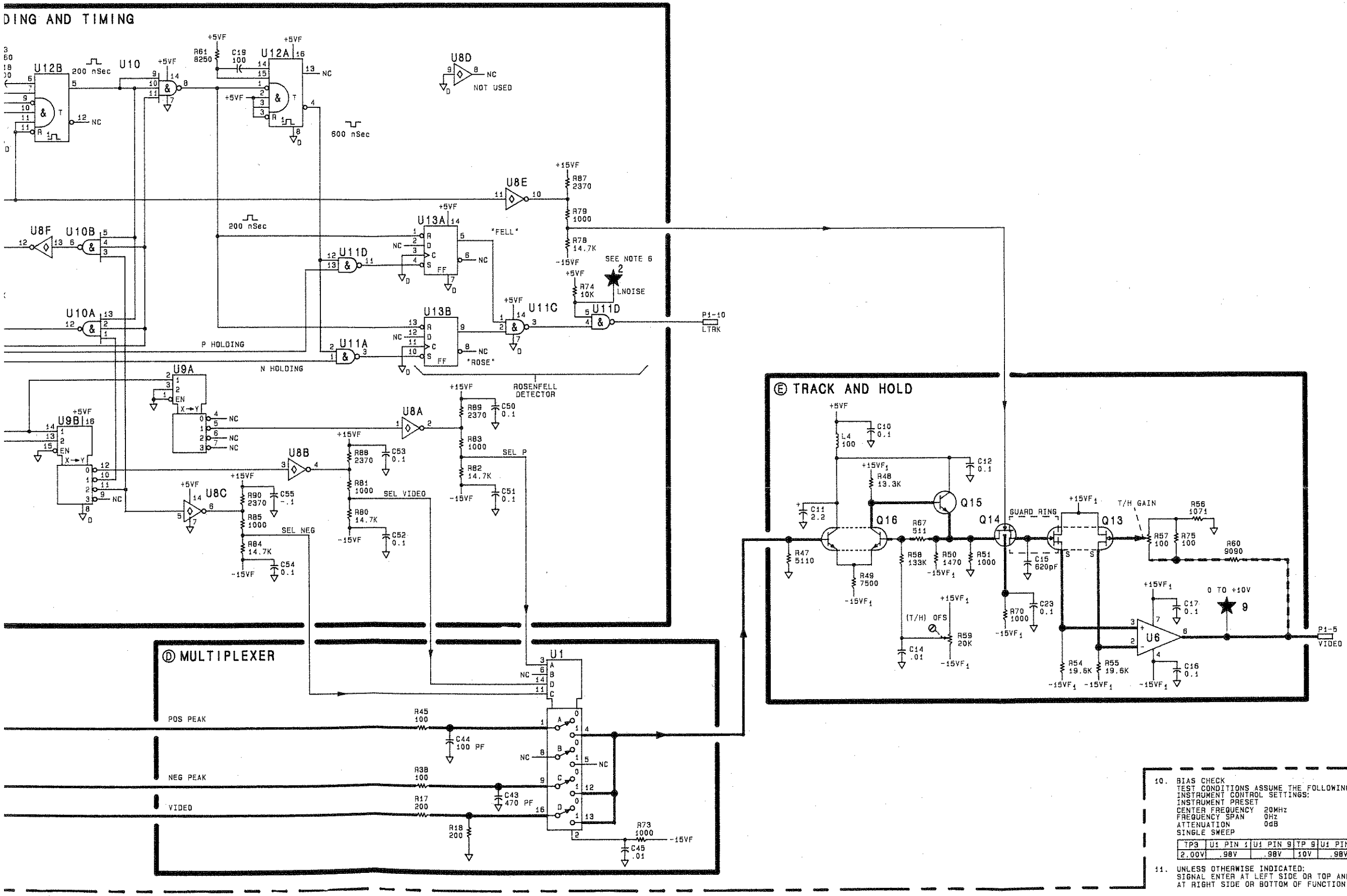

NOTES:

1. REFERENCE DESIGNATORS WITHIN THIS ASSEMBLY ARE ABBREVIATED. FOR COMPLETE REFERENCE DESIGNATION, PREFIX ABBREVIATION WITH ASSEMBLY DESIGNATION.

2. UNLESS OTHERWISE INDICATED:
RESISTANCE IS IN OHMS (Ω)
CAPACITANCE IS IN MICROFARADS (μF)
INDUCTANCE IS IN MICROHENRIES (μH)

3. UNLESS OTHERWISE INDICATED:
LOGIC LEVELS ARE TTL:
+2.0V TO +5.0V=LOGIC "1" =HIGH
0V TO +0.8V=LOGIC "0" =LOW

4. MNEMONIC TABLE:

MNEMONIC	DESCRIPTION
INSEL A	MULTIPLEX CHANNEL SELECT
INSEL B	MULTIPLEX CHANNEL SELECT
RSEN	PEAK DETECTOR RESET ENABLE
HSWP	HIGH=SWEEPING
HOLD	SAMPLER ON/OFF CONTROL
OFS POS	OFFSET POSITIVE PEAK DETECTOR
GPOS	GAIN POSITIVE PEAK DETECTOR
OFS NEG	OFFSET NEGATIVE PEAK DETECTOR
GNEG	GAIN NEGATIVE PEAK DETECTOR
T/H GAIN	TRACK AND HOLD GAIN ADJUST
(T/H) OFS	TRACK AND HOLD OFFSET ADJUST
LTRK	TRACKING INPUT SIGNAL (HIGH = NOISE)

5. INPUT SELECT TABLE

INSEL A	INSEL B	FUNCTION SELECTED
0	0	SAMPLE
1	0	POS PEAK
0	1	NEG PEAK
1	1	POS PEAK

6. GROUNDING LNOISE FORCES LTRK HIGH, INDICATING A "NOISY" SIGNAL. THIS IS DONE TO CHECK DYNAMIC TRACKING OF PEAK DETECTORS.

7. Q1, 2, 3, 7, 8, 10 AND 16 ARE DUAL TRANSISTORS WITH THE FOLLOWING P1 CONFIGURATION:
TOP VIEW

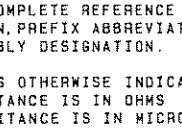

8. Q6 AND Q14 ARE MOS n-channel ENHANCEMENT MODE FETs WITH THE FOLLOWING PIN CONFIGURATION:
TOP VIEW

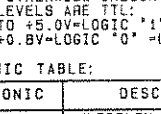

9. Q4, 11, AND 13 ARE DUAL FETs WITH THE FOLLOWING PIN CONFIGURATION:
TOP VIEW

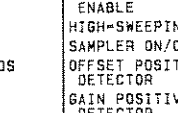

10. BIAS CHECK
TEST CONDITIONS ASSUME THE FOLLOWING INSTRUMENT CONTROL SETTINGS:
INSTRUMENT PRESET
CENTER FREQUENCY 20MHz
FREQUENCY SPAN 0Hz
ATTENUATION 0dB
SINGLE SWEEP

TP3	U1 PIN 1	U1 PIN 9	TP 9	U1 PIN 4
2.00V	.98V	.98V	10V	.98V

11. UNLESS OTHERWISE INDICATED:
SIGNAL ENTER AT LEFT SIDE OR TOP AND EXIT AT RIGHT SIDE OR BOTTOM OF FUNCTION BLOCKS.

A3A9

FIGURE 9. A3A9 TRACK AND HOLD, SCHEMATIC DIAGRAM

TABLE 1. A3A10, REPLACEABLE PARTS

Reference Designation	HP Part Number	C D	Qty	Description	Mfr Code	Mfr Part Number
A3A10	85662-60015	7	1	BOARD ASSEMBLY, DIGITAL STORAGE MOTHERBOARD (INCLUDES W2 AND W3)	28480	85662-60015
A3A10J1	1200-0508	0	1	SOCKET-IC 14-CONT DIP-SLDR	28480	1200-0508
A3A10J2	1251-5926	3	1	CONNECTOR 50-PIN M POST TYPE	28480	1251-5926
A3A10J3	1251-5816	0	1	CONNECTOR 4-PIN M POST TYPE	28480	1251-5816
A3XA1P1	1251-2026	8	14	CONNECTOR-PC EDGE 18-CONT/ROW 2-ROWS	28480	1251-2026
A3XA1P2	1251-2026	8		CONNECTOR-PC EDGE 18-CONT/ROW 2-ROWS	28480	1251-2026
A3XA2P1	1251-2026	8		CONNECTOR-PC EDGE 18-CONT/ROW 2-ROWS	28480	1251-2026
A3XA2P2	1251-2026	8		CONNECTOR-PC EDGE 18-CONT/ROW 2-ROWS	28480	1251-2026
A3XA3P1	1251-2026	8		CONNECTOR-PC EDGE 18-CONT/ROW 2-ROWS	28480	1251-2026
A3XA3P2	1251-2026	8		CONNECTOR-PC EDGE 18-CONT/ROW 2-ROWS	28480	1251-2026
A3XA4P1	1251-2026	8		CONNECTOR-PC EDGE 18-CONT/ROW 2-ROWS	28480	1251-2026
A3XA5P1	1251-2026	8		CONNECTOR-PC EDGE 18-CONT/ROW 2-ROWS	28480	1251-2026
A3XA6P1	1251-2026	8		CONNECTOR-PC EDGE 18-CONT/ROW 2-ROWS	28480	1251-2026
A3XA6P2	1251-2026	8		CONNECTOR-PC EDGE 18-CONT/ROW 2-ROWS	28480	1251-2026
A3XA7P1	1251-2026	8		CONNECTOR-PC EDGE 18-CONT/ROW 2-ROWS	28480	1251-2026
A3XA7P2	1251-2026	8		CONNECTOR-PC EDGE 18-CONT/ROW 2-ROWS	28480	1251-2026
A3XA8P1	1251-2026	8		CONNECTOR-PC EDGE 18-CONT/ROW 2-ROWS	28480	1251-2026
A3XA9P1	1251-2026	8		CONNECTOR-PC EDGE 18-CONT/ROW 2-ROWS	28480	1251-2026

A3A10
DIGITAL STORAGE MOTHERBOARD

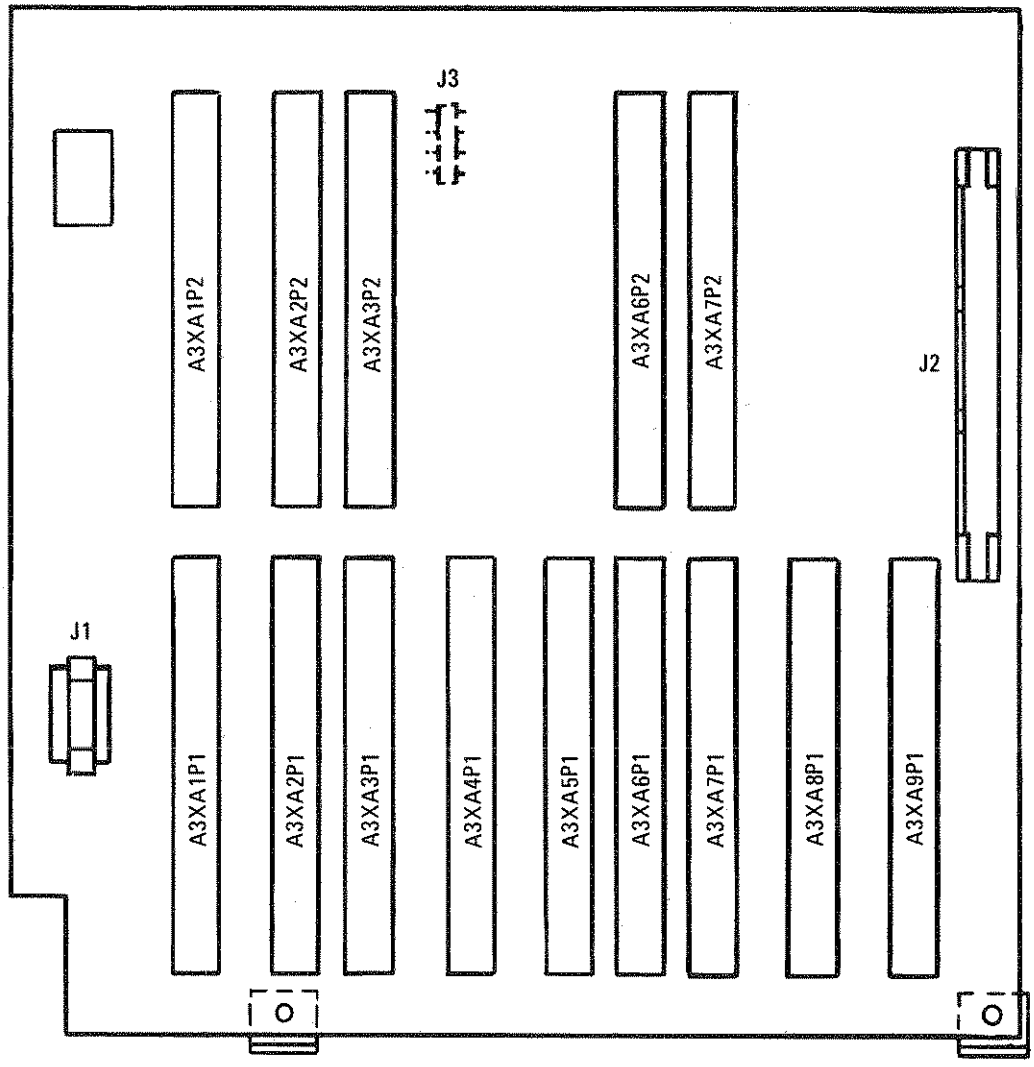

FIGURE 1. A3A10 DIGITAL STORAGE MOTHERBOARD, COMPONENT LOCATIONS

A10 DIGITAL STORAGE MOTHERBOARD
662-60015

A10J2
WIRE INSTRUMENT BUS

SIGNAL
GND (NC)
LTGR
IOBØ
IOB1
IOB2
IOB3
IOB4
IOB5
IOB6
IOB7
IOB8
IOB9
IOB10
IOB11
IOB12
IOB13
IOB14
IOB15
NC
NC
HPON (NC)
ADRØ
ADR1
ADR2
ADR3
ADR4
ADR5 (NOT USED)
NC
NC
KA8 (NC)
KA9 (NC)
KA10 (NC)
KA11 (NC)
KCØ (NC)
KC1 (NC)
KC2 (NC)
KC3 (NC)
KC4 (NC)
KC5 (NC)
KC6 (NC)
KC7 (NC)
LSTP (NC)
HSWP
LSRG (NC)
LDSR
LBIG (NC)
GND
LTIO
DGND

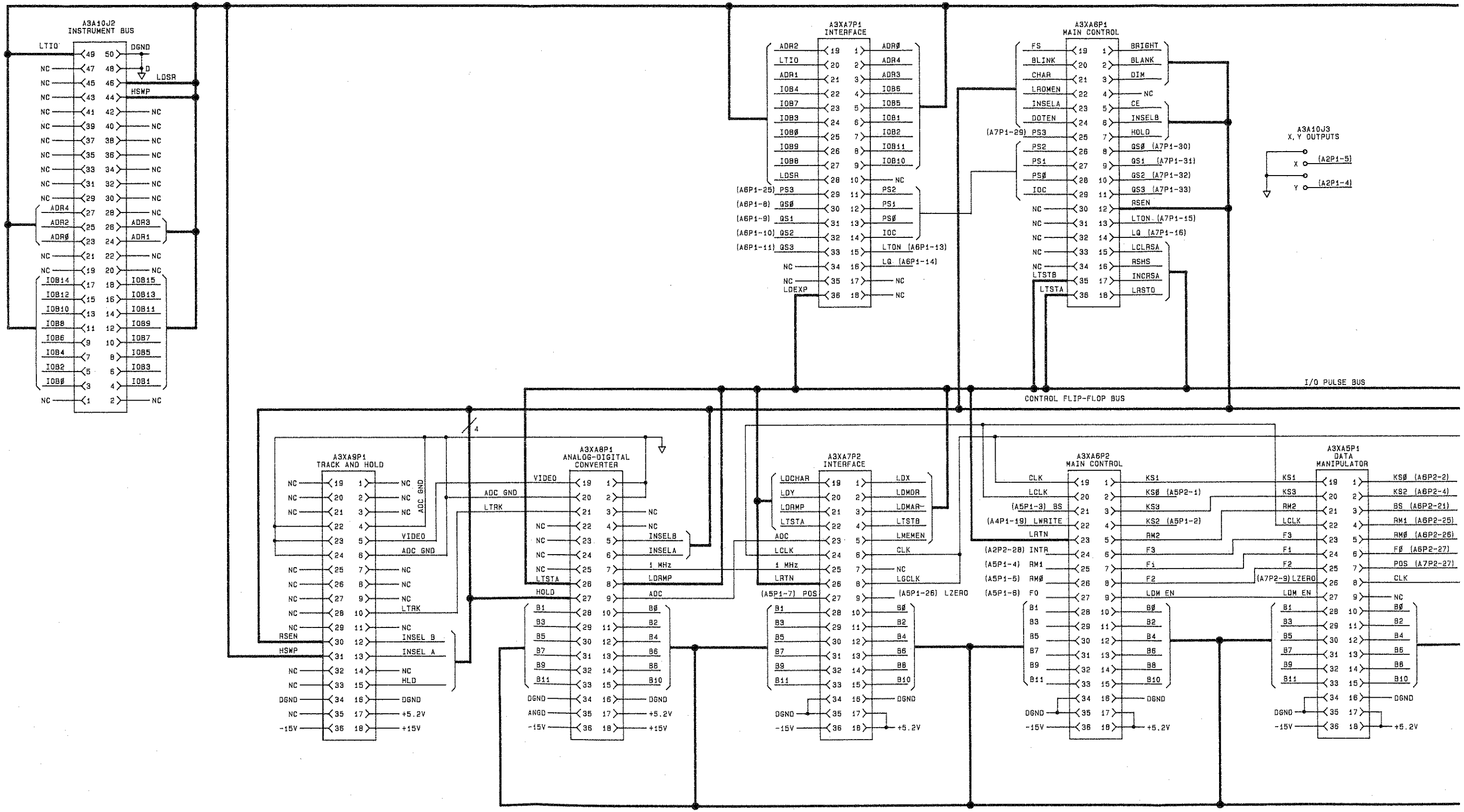

AL NUMBER PREFIX: 2403A

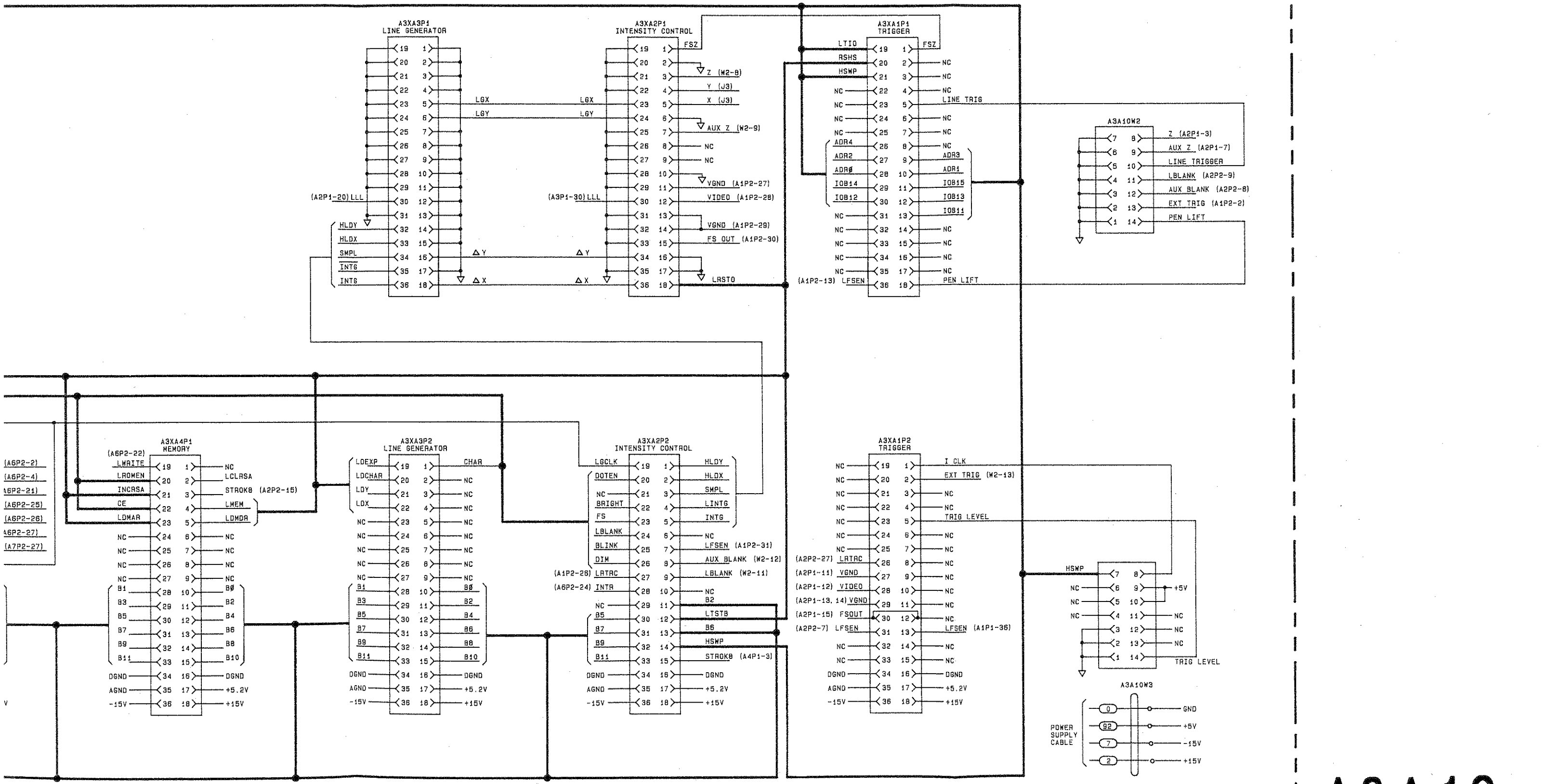

A3A10

FIGURE 2. A3A10 DIGITAL STORAGE MOTHERBOARD, INTERCONNECT DIAGRAM

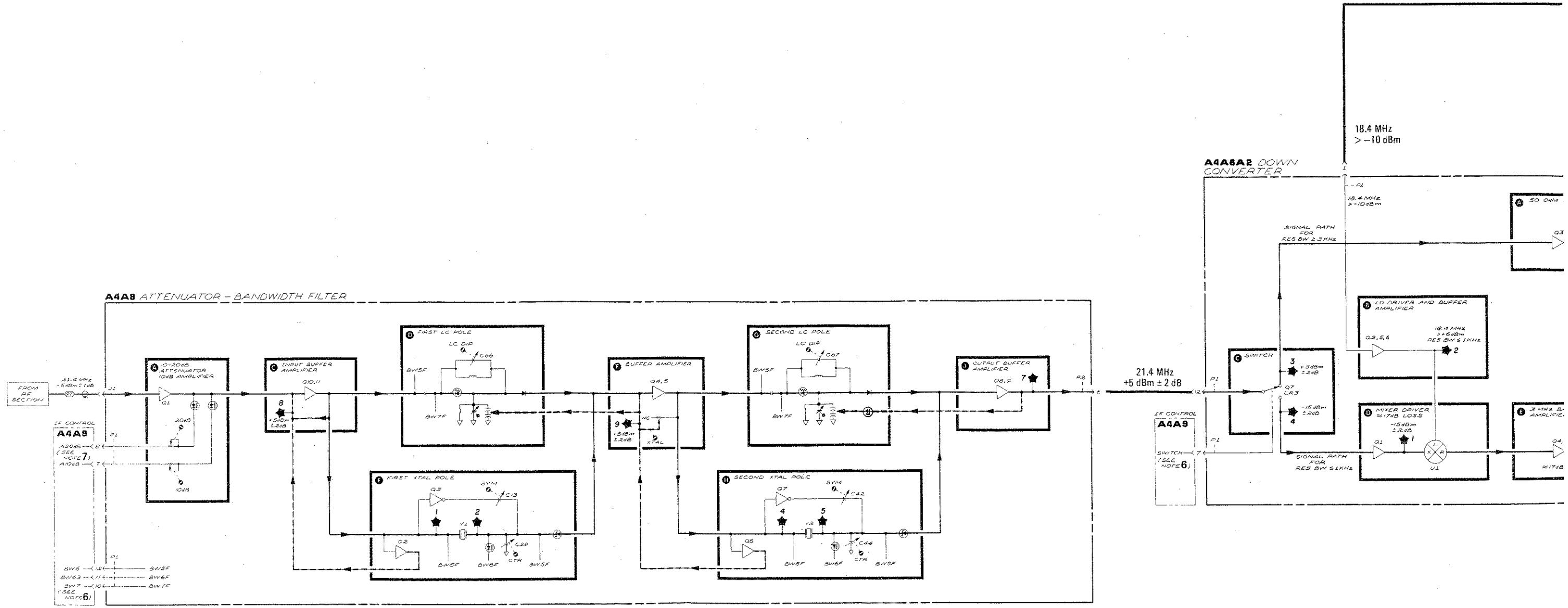
A4A8 ATTENUATOR – BANDWIDTH FILTER
FROM RF SECTION
21.4 MHz +5dBm ± 1dB
IF CONTROL A4A9
A 10-20dB ATTENUATOR 10dB AMPLIFIER
B INPUT BUFFER AMPLIFIER
D FIRST LC POLE
E FIRST XTAL POLE
F BUFFER AMPLIFIER
G SECOND LC POLE
H SECOND XTAL POLE
I OUTPUT BUFFER AMPLIFIER
21.4 MHz +5 dBm ± 2 dB
A4A6A2 DOWN CONVERTER
18.4 MHz >–10 dBm
SIGNAL PATH FOR RES BW 2.3 KHz
SIGNAL PATH FOR RES BW 5 KHz
A 50 OHM
B LO DRIVER AND BUFFER AMPLIFIER
C SWITCH
D MIXER DRIVER ≈17dB LOSS
E 3 MHz BUFFER AMPLIFIER
IF CONTROL A4A9
P/O A4A5 STEP GAIN
A 21.4 MHz +5 dBm ± 2 dB
C STEP GAIN 10dB + CAL
D STEP GAIN 20dB-1
E STEP GAIN 20dB-2
F 40.0 – 415.0dB ATTENUATORS
21.4 MHz –3 dBm ± 2 dB
A4A4 BANDWIDTH FILTER
A 10dB GAIN BUFFER AMPLIFIER
C FIRST LC POLE
E BUFFER AMPLIFIER
F BUFFER AMP

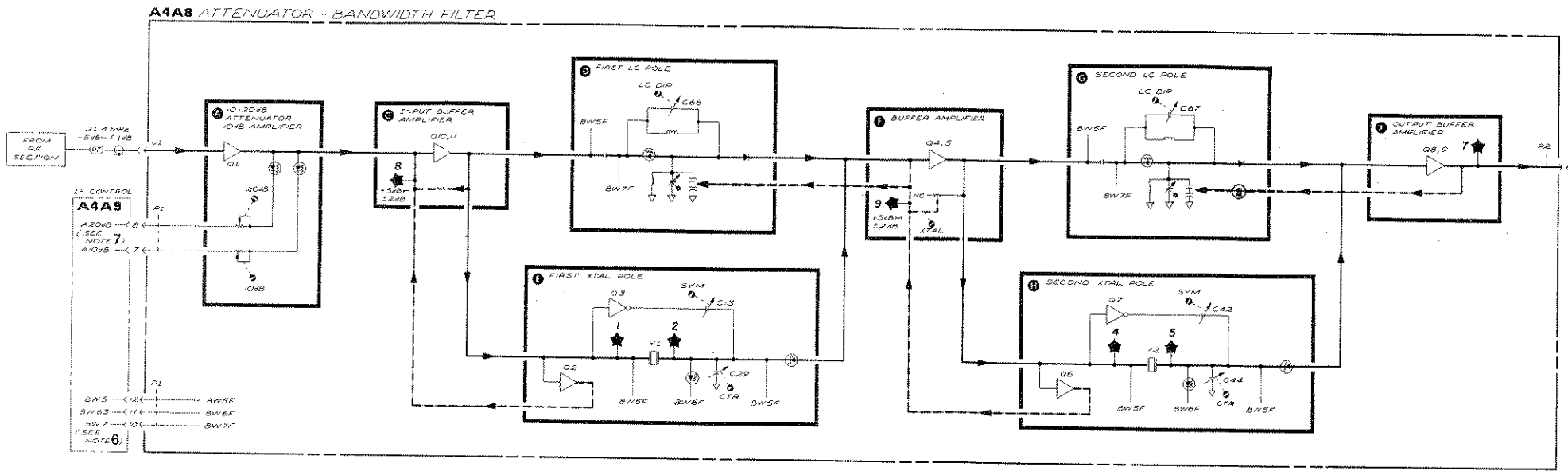

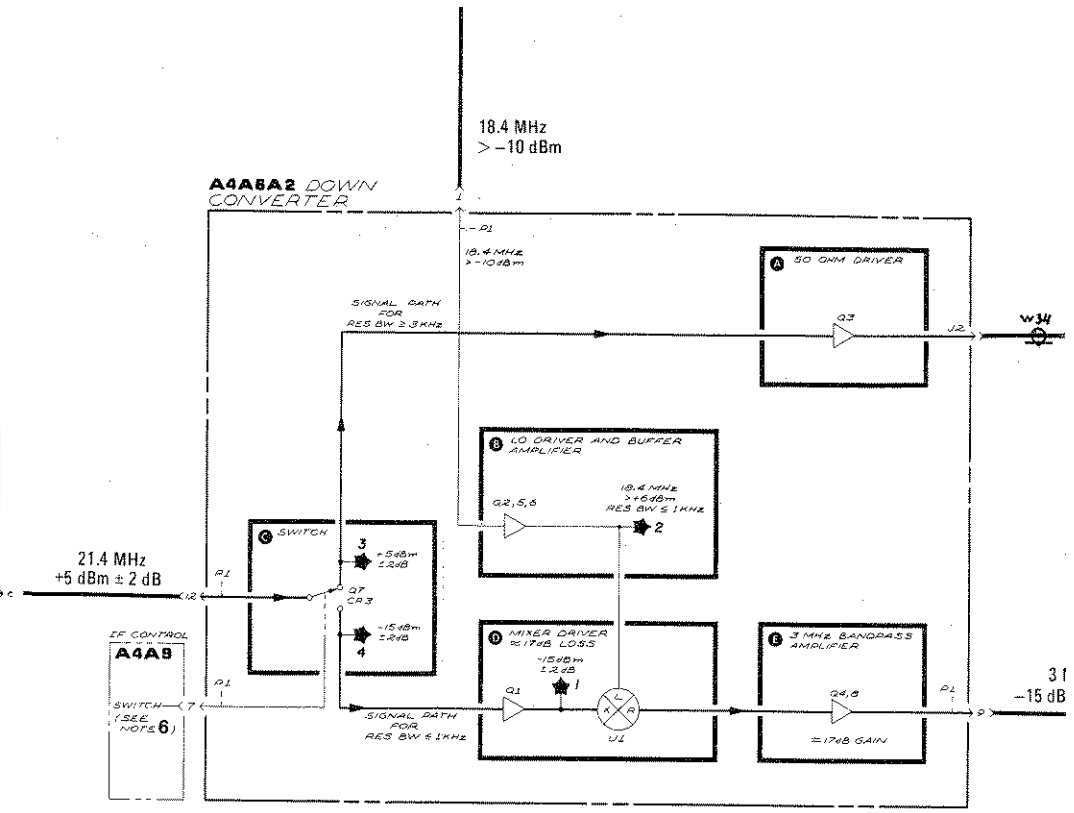

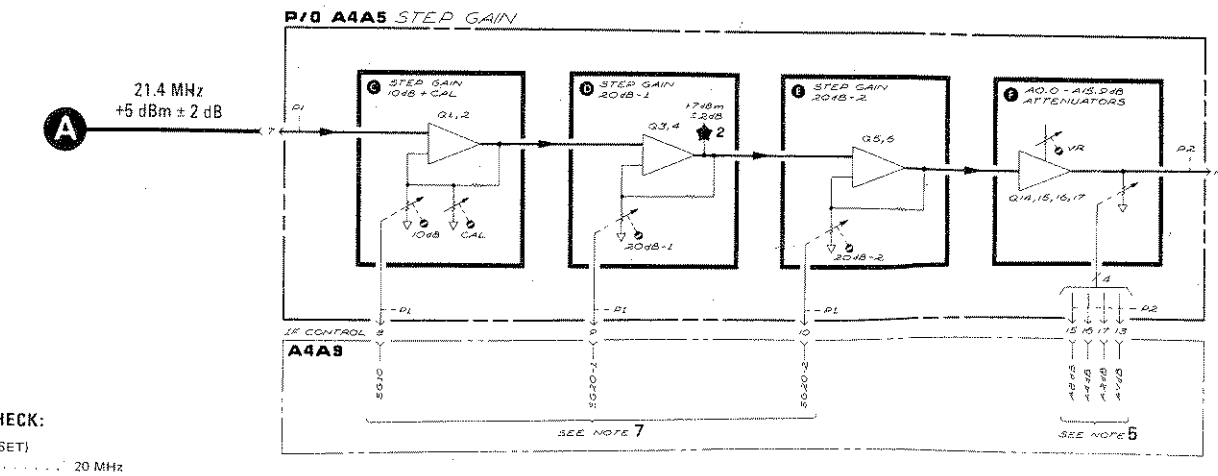

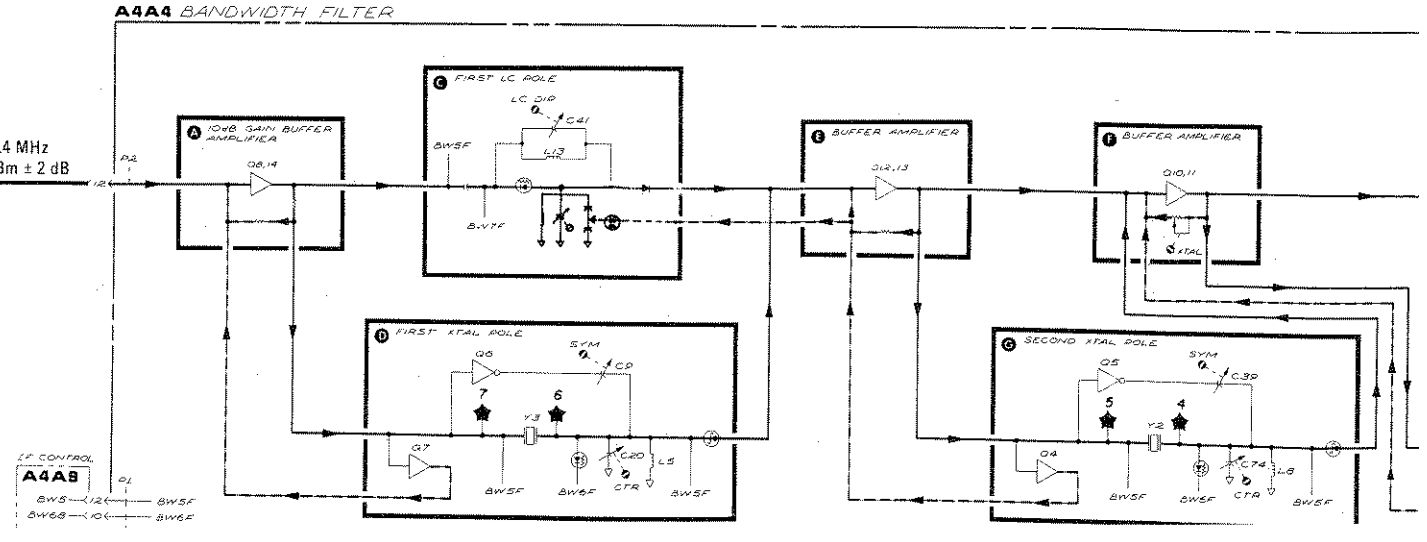

LOG AMPLIFIER STAGE GAIN CHECK:

CONTROL SETTINGS: (INSTR PRESET)

CENTER FREQUENCY	20 MHz
FREQUENCY SPAN	0 Hz
RESOLUTION BANDWIDTH	100 kHz
REFERENCE LEVEL	

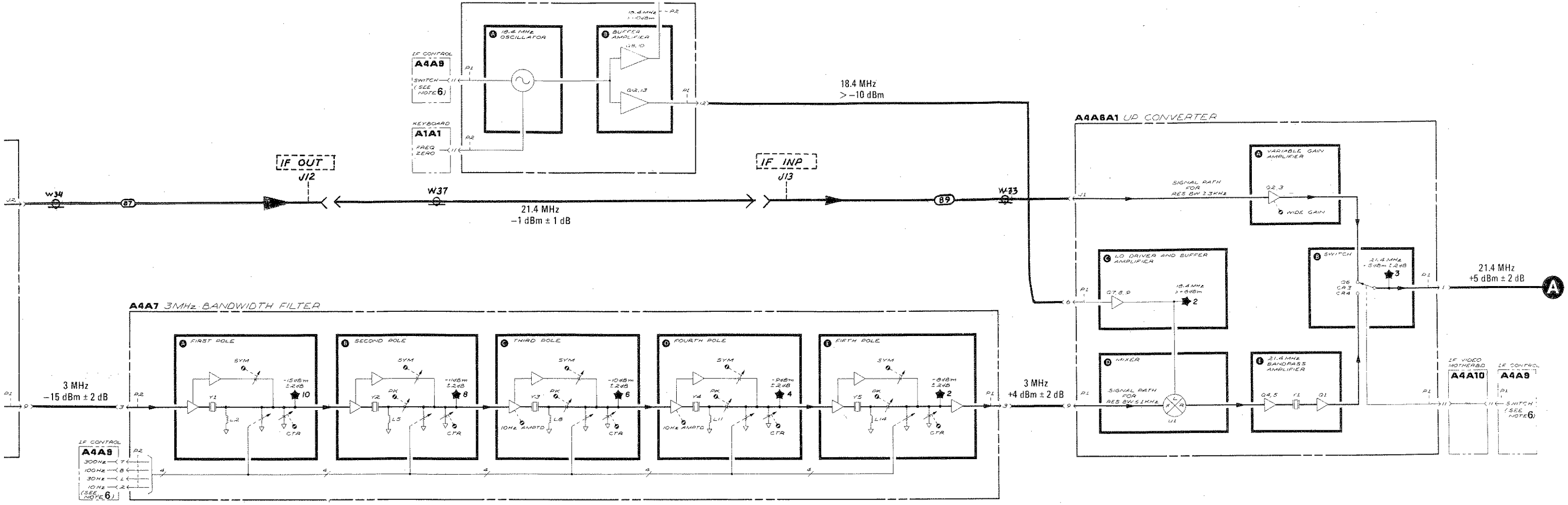

LOG AMPLIFIER STAGE GAIN CHECK:

CONTROL SETTINGS: (INSTR PRESET)
- CENTER FREQUENCY . . . . . 20 MHz
- FREQUENCY SPAN . . . . . 0 Hz
- RES BW . . . . . 100 kHz
- REFERENCE LEVEL . . . . . 0 dBm
- ATTENUATION . . . . . 10 dB

CONNECT HP 355D ATTENUATOR BETWEEN CAL OUTPUT AND SIGNAL INPUT 2 CONNECTORS

20 MHz CALIBRATOR ATTENUATED BY	TEST POINT	LEVELS (±25%)
0 dB	P1-7	700 mV PK-PK
0 dB	1	700 mV PK-PK
10 dB	2	700 mV PK-PK
20 dB	3	280 mV PK-PK
30 dB	4	100 mV PK-PK
30 dB	5	330 mV PK-PK
30 dB	P2-2	700 mV PK-PK

BANDPASS FILTER WIDE/NARROW CONDITIONS:

BW5	RESOLUTION BW	FILTER BANDWIDTH	CR30 BIAS
HI +14.8V (TYP)	100 kHz TO 3 MHz	WIDE (APPROX. 20 MHz)	FORWARD
LO −.6V (TYP)	10 Hz TO 30 kHz	NARROW (APPROX. 1 MHz)	REVERSE

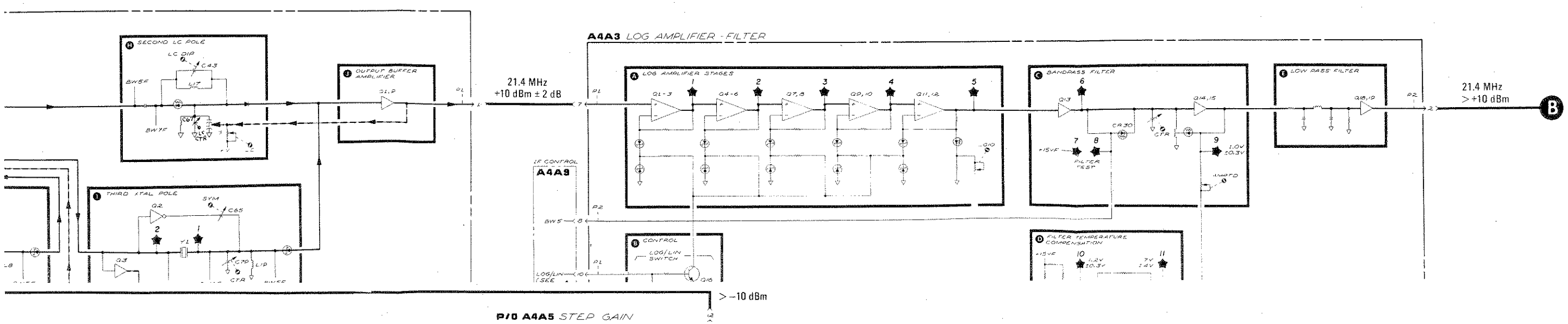

LOG EXPAND FIDELITY TABLE:

INSTRUMENT CONTROL SETTINGS ARE AS FOLLOWS:
- INSTRUMENT PRESET
- CENTER FREQUENCY . . . . 20 MHz
- FREQUENCY SPAN . . . . . 0 Hz
- ATTENUATOR . . . . . 0 dB

CONNECT 355D ATTENUATOR BETWEEN CALIBRATOR OUTPUT AND SIGNAL INPUT 2

EXTERNAL ATTENUATOR (355D)	TP1	TP2	TP3
0 dB	+1V	0V	+2V
50 dB	+0.5V	-2.5V	+1V
50 dB*	0V	-5V	0V

*PUSH LINEAR KEY

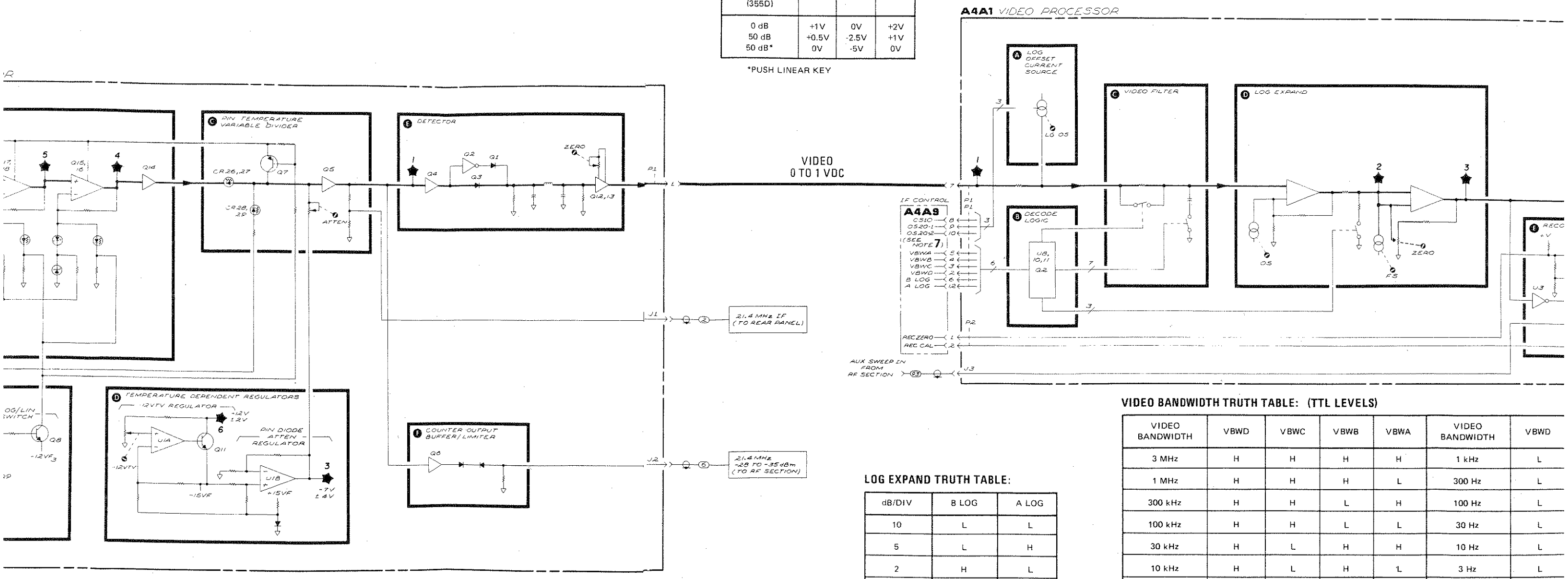

VIDEO BANDWIDTH TRUTH TABLE: (TTL LEVELS)

VIDEO BANDWIDTH	VBWD	VBWC	VBWB	VBWA	VIDEO BANDWIDTH	VBWD
3 MHz	H	H	H	H	1 kHz	L
1 MHz	H	H	H	L	300 Hz	L
300 kHz	H	H	L	H	100 Hz	L
100 kHz	H	H	L	L	30 Hz	L
30 kHz	H	L	H	H	10 Hz	L
10 kHz	H	L	H	L	3 Hz	L
3 kHz	H	L	L	H	1 Hz	L

LOG EXPAND TRUTH TABLE:

dB/DIV	B LOG	A LOG
10	L	L
5	L	H
2	H	L
1	H	H

(TTL LEVELS)

BWB — 10 — BW6F
BW7 — 8 — BW7F
(SEE NOTE 6)

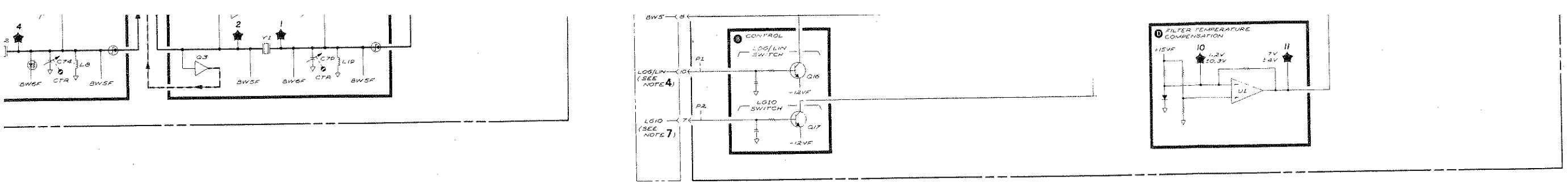

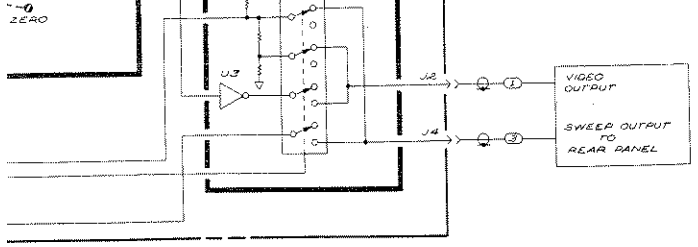

	VIDEO BANDWIDTH	VBWD	VBWC	VBWB	VBWA
	1 kHz	L	H	H	L
	300 Hz	L	H	L	H
	100 Hz	L	H	L	L
	30 Hz	L	L	H	H
	10 Hz	L	L	H	L
	3 Hz	L	L	L	H
	1 Hz	L	L	L	L

NOTES:

1. UNLESS OTHERWISE INDICATED POWER LEVELS ARE MEASURED UNDER THE FOLLOWING CONDITIONS USING AN ACTIVE PROBE AND SPECTRUM ANALYZER:
   INSTRUMENT PRESET
   CENTER FREQUENCY . . . . . 20 MHz
   FREQUENCY SPAN . . . . . 0 Hz
   ATTENUATION . . . . . 0 dB
   RESOLUTION BANDWIDTH. . . . . 3 kHz
2. A4A9 IF CONTROL ASSEMBLY IS NOT INCLUDED ON THE BLOCK DIAGRAM. IF A CONTROL LINE HAS AN INCORRECT VOLTAGE LEVEL REFER TO THE A4A9 SCHEMATIC FOR FURTHER TROUBLESHOOTING INFORMATION.
3. SEE SPECIAL MESSAGE AND DIAGNOSTIC FUNCTIONS FOR USE OF THE ERROR CORRECTION ROUTINE (KSW · SHIFT FREQUENCY SPAN) IN TROUBLESHOOTING.

4. LOG/LIN CONTROL LEVELS:

	LOG/LIN
LOG	5V TO 10V
LIN	–10V TO –14V

5. A0.0 – 15.9 dB ATTENUATOR CONTROL TABLE:

REFERENCE LEVEL dBm	CONTROL LINES		
	A2dB	A4dB	A8dB
–10	>+13V	>+13V	0V
–11	>+13V	>+13V	0V
–12	0V	0V	>+13V
–13	0V	0V	>+13V
–14	>+13V	0V	>+13V
–15	>+13V	0V	>+13V
–16	0V	>+13V	>+13V
–17	0V	>+13V	>+13V
–18	>+13V	>+13V	>+13V
–19	>+13V	>+13V	>+13V

6. BANDWIDTH CONTROL LINES (ALL VOLTAGES APPROXIMATE)

RES BW \ CONTROL LINES	BW5	BW83	BW68	BW7	SWITCH	300 Hz	100 Hz	30 Hz	10 Hz
3 MHz	+14.8V	–14V	–14V	+9.7V	+14.7V	<–10V	<–10V	<–10V	<–10V
1 MHz	+14.8V	–14V	–14V	+13.1V	+14.7V	<–10V	<–10V	<–10V	<–10V
300 kHz	+14.8V	–14V	–14V	+14.1V	+14.7V	<–10V	<–10V	<–10V	<–10V
100 kHz	+14.8V	–14V	–14V	+14.5V	+14.7V	<–10V	<–10V	<–10V	<–10V
30 kHz	–.8V	+14.3V	+14.3V	+14.3V	+14.7V	<–10V	<–10V	<–10V	<–10V
10 kHz	–.8V	+9.3V	+9.3V	+14.3V	+14.7V	<–10V	<–10V	<–10V	<–10V
3 kHz	–.8V	+9.0V	+9.0V	+14.3V	+14.7V	<–10V	<–10V	<–10V	<–10V
1 kHz	–.6V	+14.3V	+9.2V	+14.3V	0V	<–10V	<–10V	<–10V	<–10V
500 Hz	–.6V	+14.3V	+9.2V	+14.3V	0V	>4V	<–10V	<–10V	<–10V
100 Hz	–.6V	+14.3V	+9.2V	+14.3V	0V	<–10V	>4V	<–10V	<–10V
30 Hz	–.6V	+14.3V	+9.2V	+14.3V	0V	<–10V	<–10V	>4V	<–10V
10 Hz	–.6V	+14.3V	+9.2V	+14.3V	0V	<–10V	<–10V	>4V	>4V

7. 10 dB STEP GAIN TRUTH TABLE: (ALL VOLTAGES APPROXIMATE)

REFERENCE LEVEL RES BW ≥ 3 kHz	dBm			–10	–20	–30	–40	–50	–60	–70	–80	–90	–100	–110
REFERENCE LEVEL RES BW ≤ 1 kHz	dBm	–10	–20	–30	–40	–50	–60	–70	–80	–90	–100	–110	–120	–130
A10dB	LOG	9	0	9	9	9	9	9	9	9	9	9	9	9
	LIN	9	0	9	9	9	9	9	9	9	9	9	■	■
A20dB	LOG	0	9	9	9	9	9	9	9	9	9	9	9	9
	LIN	0	9	9	9	9	9	9	9	9	9	9	■	■
SG10	LOG	>7.5	>7.5	>7.5	0	>7.5	0	>7.5	0	0	0	0	0	0
	LIN	>7.5	>7.5	>7.5	0	>7.5	0	>7.5	0	0	0	0	■	■
SG20–1	LOG	>8.5	>8.5	>8.5	>8.5	0	0	0	0	0	0	0	0	0
	LIN	>8.5	>8.5	>8.5	>8.5	0	0	0	0	0	0	0	■	■
SG20–2	LOG	>8.5	>8.5	>8.5	>8.5	>8.5	>8.5	0	0	0	0	0	0	0
	LIN	>8.5	>8.5	>8.5	>8.5	>8.5	>8.5	0	0	0	0	0	■	■
OS10	LOG	>14	>14	>14	>14	>14	>14	>14	>14	0	>14	0	>14	0
	LIN	>14	>14	>14	>14	>14	>14	>14	>14	>14	>14	>14	■	■
OS20–1	LOG	>14	>14	>14	>14	>14	>14	>14	>14	>14	0	0	0	0
	LIN	>14	>14	>14	>14	>14	>14	>14	>14	>14	>14	>14	■	■
OS20–2	LOG	>14	>14	>14	>14	>14	>14	>14	>14	>14	>14	>14	0	0
	LIN	>14	>14	>14	>14	>14	>14	>14	>14	>14	>14	>14	■	■
LG10	LOG	<–10	<–10	<–10	<–10	<–10	<–10	<–10	<–10	<–10	<–10	<–10	■	■
	LIN	<–10	<–10	<–10	<–10	<–10	<–10	<–10	<–10	>–3	<–10	>–3	■	■
LG20	LOG	<–10	<–10	<–10	<–10	<–10	<–10	<–10	<–10	<–10	<–10	<–10	■	■
	LIN	<–10	<–10	<–10	<–10	<–10	<–10	<–10	<–10	<–10	>–3	>–3	■	■

INPUT ATTENUATION SETTING AT 0 dB

SHIFT ATTEN (KSI) (FOR EXTENDED REFERENCE LEVEL RANGES)

A

FIGURE 1. A4 IF SECTION, BLOCK DIA

A4

A4A1 VIDEO PROCESSOR, CIRCUIT DESCRIPTION

A4A1 Video Processor filters the detected IF signal from A4A2 Log Amplifier, it sets the dB/DIV LOG SCALE and the REFERENCE LEVEL offsets below −50 dBm or −70 dBm, and it provides the IF video output and the X and Y recorder outputs.

Video Filter (C)

The Video Filter is an RC low pass filter with selectable R and C. The series resistance R is one of two values controlled by switch U7. When the switch is closed (0), R17 is short circuited and the series resistance is minimum. In this state, video bandwidths from 3 kHz to 3 MHz are attainable (The 3 MHz nominal bandwidth is attained when Q14 through Q20 are turned off). When switch U7 is open (1), the series resistance R is high, approximately equal to R17 and video bandwidths from 1 Hz to 1 kHz are attainable. Shunt capacitors C5 through C11 are selected by switching transistors Q14 through Q20. Only one of these switching transistors can be on at any one time. Each capacitor except C11 is used with the high series resistance for the lower bandwidths and the low series resistance for the higher bandwidths.

Log Expand (D)

The Log Expand circuit allows four different amplitude scales: 10, 5, 2, 1 dB/DIV. Changes in the amplitude scale are accomplished by first amplifying the video signal, then attenuating it various amounts. This is accomplished by FET input amplifier U2, which offsets the input −5V and whose gain (set by R22 and R21) is 5. The offset is set by the current through Q1. This current source is adjustable using OS potentiometer R14. Switching transistors Q4, Q5, and Q6 are turned on or off to achieve voltage divider ratios of 1/10, 1/5, 1/2, and 1. Diodes CR2 and CR3 clamp this attenuated signal at about −1.2V to prevent forward biasing any switch in the off state. A final amplifier consisting of Q7, Q8, and Q9 amplifies this attenuated signal by 4 and offsets the output +2V. A +2V output corresponds to a full scale signal. This final amplifier is a two-stage amplifier. The first stage is a FET input stage made up of dual FET Q7. The first-stage output is multiplied by the transistor inverter Q8, whose output is buffered by an emitter follower Q9. This output is fed back to the inverting input through a resistor divider stick. Gain of the amplifier is adjusted by ZERO potentiometer R32, and offset for full scale is adjusted by FS potentiometer R36. Diode CR1 clamps the output at about −1.2V.

Log Offset Current Source (A)

The Log Offset Current Source simulates log gain for instrument reference levels below −60 dBm. This is achieved by offsetting the 0V to 1V video input signal by driving current through the source resistance R16. This current is changed by supplying different currents into the emitter of Q13, the transistor current source. Currents are controlled by switching transistors Q10, Q11, and Q12. For example, when switch Q12 is turned on, the transistor saturates and a current flows through R5 into the emitter of Q13. This emitter current (set by the voltage drop across R5) is closely equal to the collector current through Q12. The voltage drop across R5 can be changed by varying LG OS potentiometer R2, since U6 pin 3 and the emitter of Q13 are at the same voltage. This is true because U6 is a voltage follower with unity gain. Once R2 is set, the accuracy of R5, R7, and R9 determines the relative accuracy of the offsets, 0.1V, 0.2V, 0.2V (10 dB, 20 dB, 20 dB).

Power Supplies (F)

Zener diode VR2 is used to provide the −8.8V supply, which is used in the Log Expand circuit with the FS adjustment R36.

Decode Logic (B)

The Decode Logic circuit performs additional decoding on output lines from IF Control A4A9. VBWA, VBWB, VBWC, and VBWD are decoded by U8, a 1-of-8 decoder, and inverted by U10 to drive one of the seven capacitors used in the Video Filter. U11 decodes A LOG and B LOG and drives the switches that vary the attenuator in the Log Expand circuit.

Recorder Output (E)

The Recorder Output circuit provides outputs for an X-Y plotter. Also provided are outputs for calibrating lower left (LL) and upper right (UR). Calibration outputs and signal outputs are routed through switch U4. A control line, REC CAL, from IF Control A4A9 controls the state of the U4 switches. When REC CAL is high, the video output through U3 and AUX SWEEP have closed paths through the switch to provide VIDEO and SWEEP outputs to the rear panel. When the REC CAL is low, a closed path through the switch exists between the calibration voltages and the VIDEO and SWEEP outputs. Control line REC ZERO causes the FS or ZERO voltage to appear across the R50, R55, R51 divider stick. When in LL, REC ZERO is low and the switch inputs are pulled to about 0V. When REC ZERO is high, its open collector output will be set to the voltage determined by the divider stick: +10V for X_r out, and +1V for Y_r out.

A4A1 VIDEO PROCESSOR, TROUBLESHOOTING

Proper operation of the Log Offsets, OS1Ø, OS2Ø-1, and OS2Ø-2 can be determined from the display.

Connect an HP 355D Step Attenuator between CAL OUTPUT and the input of the spectrum analyzer. Set this attenuator to 110 dB. Press Instrument Preset and key in the following settings:

[CENTER FREQUENCY] ..... equal to CAL OUTPUT frequency
[FREQUENCY SPAN] ..... 0 Hz
[RES BW] ..... 3 kHz
[VIDEO BW] ..... 10 Hz
[ATTEN] ..... 0 dB
[SHIFT] [ATTEN]
[SWEEP TIME] ..... 20 sec
[REFERENCE LEVEL] ..... −40 dBm

Press the [SINGLE] sweep key. Then press the DATA STEP ⇩ key repeatedly. A display similar to Figure 1 should result. If a step is missing, one of the offsets or its control circuitry is defective. The truth table in Note 5 is an aid to determine which offset circuit is not operating properly. 0V in the table indicates that an offset is active. Accurate determination of amplitude step size is attainable using the MARKER [Δ] key and the DATA knob.

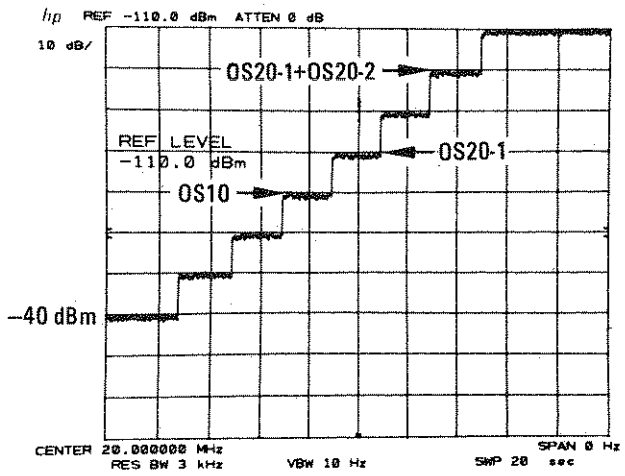

NOTE: Center Frequency readout will be 100.000 000 MHz for an HP 8566B.

FIGURE 1. LOG OFFSET GAIN STEP DISPLAY

The Video Filter circuit can be checked from the front panel. With no input signal, press Instrument Preset and set the controls as follows:

[CENTER FREQUENCY] ..... 25 MHz
[FREQUENCY SPAN] ..... 100 kHz
[SWEEP TIME] ..... 20 sec
[REFERENCE LEVEL] ..... −90 dBm
[VIDEO BW] ..... 1 Hz

Press [SINGLE] sweep. Then press the DATA STEP [⇧] key repeatedly. The display should appear as in Figure 2. Now key in [SHIFT] TRACE A [VIEW] . This turns only the Negative Peak Detector on. Reset [VIDEO BW] to 1 Hz. Press the [SINGLE] sweep key. Then press the DATA step [⇧] key repeatedly. The display should appear as in Figure 3.

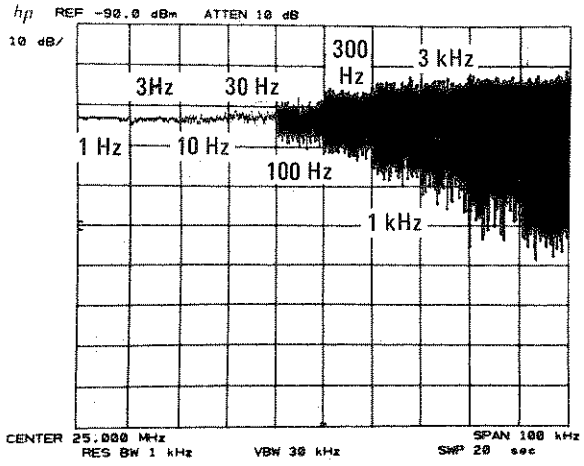

FIGURE 2. VIDEO BANDWIDTH STEP DISPLAY

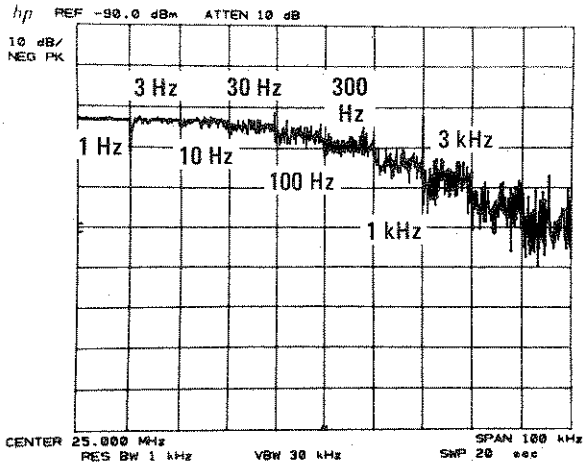

FIGURE 3. VIDEO BANDWIDTH STEP DISPLAY WITH NEGATIVE PEAK DETECTION

If the displayed noise does not change monotonically (continuously decrease level) with the step key, the indicated Video bandwidth is faulty. Refer to the service sheet to determine the defective switch, capacitor, or decoder.

The Log Expand and Decode Logic circuitry can be accurately checked by using the Error Correction Routine. Pressing [SHIFT] [FREQUENCY SPAN] (KSW) starts this routine. The error terms are displayed by pressing [SHIFT] [LINE] (KSw). The last three lines give the offset errors from the 1 dB LOG reference for the 2 dB, 5 dB, and 10 dB LOG scales, respectively. Maximum error is ± 0.5 dB for proper operation.

TABLE 1. A4A1, REPLACEABLE PARTS (1 OF 2)

Reference Designation	HP Part Number	C D	Qty	Description	Mfr Code	Mfr Part Number
A4A1	85662-60122	7	1	BOARD ASSEMBLY, VIDEO PROCESSOR	28480	85662-60122
A4A1C1				NOT ASSIGNED		
A4A1C2	0160-2055	9	9	CAPACITOR-FXD .01UF +80-20% 100VDC CER	28480	0160-2055
A4A1C3				NOT ASSIGNED		
A4A1C4	0160-2055	9		CAPACITOR-FXD .01UF +80-20% 100VDC CER	28480	0160-2055
A4A1C5	0160-0945	2	1	CAPACITOR-FXD 910PF +-5% 100VDC MICA	28480	0160-0945
A4A1C6	0160-0155	6	1	CAPACITOR-FXD 3300PF +-10% 200VDC POLYE	28480	0160-0155
A4A1C7	0160-0161	4	1	CAPACITOR-FXD .01UF +-10% 200VDC POLYE	28480	0160-0161
A4A1C8	0160-0163	6	1	CAPACITOR-FXD .033UF +-10% 200VDC POLYE	28480	0160-0163
A4A1C9	0160-0168	1	1	CAPACITOR-FXD .1UF +-10% 200VDC POLYE	28480	0160-0168
A4A1C10	0180-2205	3	1	CAPACITOR-FXD .33UF+-10% 35VDC TA	56289	150D334X9035A2
A4A1C11	0180-0291	3	1	CAPACITOR-FXD 1UF+-10% 35VDC TA	56289	150D105X9035A2
A4A1C12	0160-2055	9		CAPACITOR-FXD .01UF +80-20% 100VDC CER	28480	0160-2055
A4A1C13				NOT ASSIGNED		
A4A1C14	0160-2055	9		CAPACITOR-FXD .01UF +80-20% 100VDC CER	28480	0160-2055
A4A1C15	0160-2055	9		CAPACITOR-FXD .01UF +80-20% 100VDC CER	28480	0160-2055
A4A1C16	0180-1719	2	2	CAPACITOR-FXD 22UF+-10% 25VDC TA	06001	69F1466B
A4A1C17	0180-0229	7	1	CAPACITOR-FXD 33UF+-10% 10VDC TA	56289	150D336X9010B2
A4A1C18	0180-1719	2		CAPACITOR-FXD 22UF+-10% 25VDC TA	06001	69F1466B
A4A1C19	0160-2055	9		CAPACITOR-FXD .01UF +80-20% 100VDC CER	28480	0160-2055
A4A1C20	0160-2055	9		CAPACITOR-FXD .01UF +80-20% 100VDC CER	28480	0160-2055
A4A1C21	0160-2055	9		CAPACITOR-FXD .01UF +80-20% 100VDC CER	28480	0160-2055
A4A1C22	0160-2055	9		CAPACITOR-FXD .01UF +80-20% 100VDC CER	28480	0160-2055
A4A1C23	0160-4805	1	3	CAPACITOR-FXD 47PF +-5% 100VDC CER 0+-30	28480	0160-4805
A4A1C24	0160-4805	1		CAPACITOR-FXD 47PF +-5% 100VDC CER 0+-30	28480	0160-4805
A4A1C25	0160-4800	6	1	CAPACITOR-FXD 120PF +-5% 100VDC CER	28480	0160-4800
A4A1C26	0160-4791	4	1	CAPACITOR-FXD 10PF +-5% 100VDC CER 0+-30	28480	0160-4791
A4A1C27	0160-4805	1		CAPACITOR-FXD 47PF +-5% 100VDC CER 0+-30	28480	0160-4805
A4A1C28	0160-4084	8	3	CAPACITOR-FXD .1UF +-20% 50VDC CER	28480	0160-4084
A4A1C29	0160-4084	8		CAPACITOR-FXD .1UF +-20% 50VDC CER	28480	0160-4084
A4A1C30	0160-4084	8		CAPACITOR-FXD .1UF +-20% 50VDC CER	28480	0160-4084
A4A1CR1	1901-0535	9	1	DIODE-SM SIG SCHOTTKY	28480	1901-0535
A4A1CR2	1901-0179	7	2	DIODE-SWITCHING 15V 50MA 750PS DO-7	28480	1901-0179
A4A1CR3	1901-0179	7		DIODE-SWITCHING 15V 50MA 750PS DO-7	28480	1901-0179
A4A1J1	1250-0690	6	4	CONNECTOR-RF SMB M SGL-HOLE-FR 50-OHM	28480	1250-0690
A4A1J2	1250-0690	6		CONNECTOR-RF SMB M SGL-HOLE-FR 50-OHM	28480	1250-0690
A4A1J3	1250-0690	6		CONNECTOR-RF SMB M SGL-HOLE-FR 50-OHM	28480	1250-0690
A4A1J4	1250-0690	6		CONNECTOR-RF SMB M SGL-HOLE-FR 50-OHM	28480	1250-0690
A4A1L1	9140-0114	4	2	INDUCTOR RF-CH-MLD 10UH 10% .166DX.385LG	28480	9140-0114
A4A1L2	9140-0114	4		INDUCTOR RF-CH-MLD 10UH 10% .166DX.385LG	28480	9140-0114
A4A1L3	9100-1618	1	3	INDUCTOR RF-CH-MLD 5.6UH 10%	28480	9100-1618
A4A1L4	9100-1618	1		INDUCTOR RF-CH-MLD 5.6UH 10%	28480	9100-1618
A4A1L5	9100-1618	1		INDUCTOR RF-CH-MLD 5.6UH 10%	28480	9100-1618
A4A1Q1	1853-0281	9	5	TRANSISTOR PNP 2N2907A SI TO-18 PD=400MW	04713	2N2907A
A4A1Q2	1854-0404	0	11	TRANSISTOR NPN SI TO-18 PD=360MW	28480	1854-0404
A4A1Q3	1855-0050	4	1	TRANSISTOR-JFET DUAL N-CHAN D-MODE SI	28480	1855-0050
A4A1Q4	1854-0404	0		TRANSISTOR NPN SI TO-18 PD=360MW	28480	1854-0404
A4A1Q5	1854-0404	0		TRANSISTOR NPN SI TO-18 PD=360MW	28480	1854-0404
A4A1Q6	1854-0404	0		TRANSISTOR NPN SI TO-18 PD=360MW	28480	1854-0404
A4A1Q7	1855-0213	1	1	TRANSISTOR-JFET DUAL N-CHAN D-MODE TO-78	28480	1855-0213
A4A1Q8	1853-0388	7	1	TRANSISTOR-DUAL PNP PD=600MW	28480	1853-0388
A4A1Q9	1854-0378	7	1	TRANSISTOR NPN 2N5109 SI TO-39 PD=800MW	3L585	2N5109
A4A1Q10	1853-0281	9		TRANSISTOR PNP 2N2907A SI TO-18 PD=400MW	04713	2N2907A
A4A1Q11	1853-0281	9		TRANSISTOR PNP 2N2907A SI TO-18 PD=400MW	04713	2N2907A
A4A1Q12	1853-0281	9		TRANSISTOR PNP 2N2907A SI TO-18 PD=400MW	04713	2N2907A
A4A1Q13	1853-0281	9		TRANSISTOR PNP 2N2907A SI TO-18 PD=400MW	04713	2N2907A
A4A1Q14	1854-0404	0		TRANSISTOR NPN SI TO-18 PD=360MW	28480	1854-0404
A4A1Q15	1854-0404	0		TRANSISTOR NPN SI TO-18 PD=360MW	28480	1854-0404
A4A1Q16	1854-0404	0		TRANSISTOR NPN SI TO-18 PD=360MW	28480	1854-0404
A4A1Q17	1854-0404	0		TRANSISTOR NPN SI TO-18 PD=360MW	28480	1854-0404
A4A1Q18	1854-0404	0		TRANSISTOR NPN SI TO-18 PD=360MW	28480	1854-0404
A4A1Q19	1854-0404	0		TRANSISTOR NPN SI TO-18 PD=360MW	28480	1854-0404
A4A1Q20	1854-0404	0		TRANSISTOR NPN SI TO-18 PD=360MW	28480	1854-0404
A4A1Q21	1854-0637	1	1	TRANSISTOR NPN 2N2219A SI TO-5 PD=800MW	01295	2N2219A
A4A1R1	0698-3443	0	1	RESISTOR 287 1% .125W F TC=0+-100	24546	C4-1/8-T0-287R-F
A4A1R2	2100-3189	2	1	RESISTOR-TRMR 2K 10% C SIDE-ADJ 17-TRN	02111	43P202
A4A1R3	0698-3510	2	1	RESISTOR 453 1% .125W F TC=0+-100	24546	C4-1/8-T0-453R-F
A4A1R4	0757-0442	9	5	RESISTOR 10K 1% .125W F TC=0+-100	24546	C4-1/8-T0-1002-F
A4A1R5	0698-6880	5	1	RESISTOR 16K .5% .125W F TC=0+-50	28480	0698-6880
A4A1R6	0757-0442	9		RESISTOR 10K 1% .125W F TC=0+-100	24546	C4-1/8-T0-1002-F
A4A1R7	0698-6755	3	2	RESISTOR 8K .5% .125W F TC=0+-50	24546	NC4-1/8-T2-8001-D
A4A1R8	0757-0442	9		RESISTOR 10K 1% .125W F TC=0+-100	24546	C4-1/8-T0-1002-F
A4A1R9	0698-6755	3		RESISTOR 8K .5% .125W F TC=0+-50	24546	NC4-1/8-T2-8001-D
A4A1R10*	0757-0422	5	1	RESISTOR 909 1% .125W F TC=0+-100	24546	C4-1/8-T0-909R-F

*Indicates factory selected value

TABLE 1. A4A1, REPLACEABLE PARTS (2 OF 2)

Reference Designation	HP Part Number	C D	Qty	Description	Mfr Code	Mfr Part Number
A4A1R11	0757-0403	2	1	RESISTOR 121 1% .125W F TC=0+-100	24546	C4-1/8-T0-121R-F
A4A1R12	0757-0159	5	1	RESISTOR 1K 1% .5W F TC=0+-100	28480	0757-0159
A4A1R13	0698-3153	9	1	RESISTOR 3.83K 1% .125W F TC=0+-100	24546	C4-1/8-T0-3831-F
A4A1R14	2100-3056	8	2	RESISTOR-TRMR 5K 10% C SIDE-ADJ 17-TRN	02111	43P502
A4A1R15	0698-6330	0	1	RESISTOR 2K 1% .125W F TC=0+-25	28480	0698-6330
A4A1R16	0757-0394	0	1	RESISTOR 51.1 1% .125W F TC=0+-100	24546	C4-1/8-T0-51R1-F
A4A1R17	0698-4211	2	1	RESISTOR 158K 1% .125W F TC=0+-100	24546	C4-1/8-T0-1583-F
A4A1R18	0698-3135	1	7	RESISTOR 4.64K 1% .125W F TC=0+-100	24546	C4-1/8-T0-4641-F
A4A1R19	0698-3158	4	5	RESISTOR 23.7K 1% .125W F TC=0+-100	24546	C4-1/8-T0-2372-F
A4A1R20	0698-3158	4		RESISTOR 23.7K 1% .125W F TC=0+-100	24546	C4-1/8-T0-2372-F
A4A1R21	0698-3240	5	2	RESISTOR 500 .25% .125W F TC=0+-50	28480	0698-3240
A4A1R22	0698-7799	7	3	RESISTOR 2K .25% .125W F TC=0+-100	19701	MF4C1/8-T0-2001-C
A4A1R23	0698-7799	7		RESISTOR 2K .25% .125W F TC=0+-100	19701	MF4C1/8-T0-2001-C
A4A1R24	0698-7839	6	1	RESISTOR 222 .5% .125W F TC=0+-50	19701	MF4C1/8-T2-222R-D
A4A1R25	0698-3240	5		RESISTOR 500 .25% .125W F TC=0+-50	28480	0698-3240
A4A1R26	0698-7799	7		RESISTOR 2K .25% .125W F TC=0+-100	19701	MF4C1/8-T0-2001-C
A4A1R27	0757-0274	5	3	RESISTOR 1.21K 1% .125W F TC=0+-100	24546	C4-1/8-T0-1211-F
A4A1R28	0757-0274	5		RESISTOR 1.21K 1% .125W F TC=0+-100	24546	C4-1/8-T0-1211-F
A4A1R29	0757-0208	7	1	RESISTOR 5.62K 1% .125W F TC=0+-100	24546	C4-1/8-T0-5621-F
A4A1R30	0757-0438	3	1	RESISTOR 5.11K 1% .125W F TC=0+-100	24546	C4-1/8-T0-5111-F
A4A1R31	0698-3444	1	1	RESISTOR 316 1% .125W F TC=0+-100	24546	C4-1/8-T0-316R-F
A4A1R32	2100-3154	7	1	RESISTOR-TRMR 1K 10% C SIDE-ADJ 17-TRN	02111	43P102
A4A1R33	0757-0274	5		RESISTOR 1.21K 1% .125W F TC=0+-100	24546	C4-1/8-T0-1211-F
A4A1R34	0698-5552	6	1	RESISTOR 1K 1% .125W F TC=0+-25	28480	0698-5552
A4A1R35	0698-3275	6	1	RESISTOR 2.5K 1% .125W F TC=0+-25	28480	0698-3275
A4A1R36	2100-3056	8		RESISTOR-TRMR 5K 10% C SIDE-ADJ 17-TRN	02111	43P502
A4A1R37	0698-0084	9	3	RESISTOR 2.15K 1% .125W F TC=0+-100	24546	C4-1/8-T0-2151-F
A4A1R38	0698-0084	9		RESISTOR 2.15K 1% .125W F TC=0+-100	24546	C4-1/8-T0-2151-F
A4A1R39	0698-0084	9		RESISTOR 2.15K 1% .125W F TC=0+-100	24546	C4-1/8-T0-2151-F
A4A1R40	0698-0085	8	3	RESISTOR 2.61K 1% .125W F TC=0+-100	24546	C4-1/8-T0-2611-F
A4A1R41	0698-0085	0		RESISTOR 2.61K 1% .125W F TC=0+-100	24546	C4-1/8-T0-2611-F
A4A1R42	0757-0290	5	1	RESISTOR 6.19K 1% .125W F TC=0+-100	19701	MF4C1/8-T0-6191-F
A4A1R43	0698-3155	1		RESISTOR 4.64K 1% .125W F TC=0+-100	24546	C4-1/8-T0-4641-F
A4A1R44	0698-3158	4		RESISTOR 23.7K 1% .125W F TC=0+-100	24546	C4-1/8-T0-2372-F
A4A1R45	0698-3155	1		RESISTOR 4.64K 1% .125W F TC=0+-100	24546	C4-1/8-T0-4641-F
A4A1R46	0698-3158	4		RESISTOR 23.7K 1% .125W F TC=0+-100	24546	C4-1/8-T0-2372-F
A4A1R47	0698-3155	1		RESISTOR 4.64K 1% .125W F TC=0+-100	24546	C4-1/8-T0-4641-F
A4A1R48	0698-3158	4		RESISTOR 23.7K 1% .125W F TC=0+-100	24546	C4-1/8-T0-2372-F
A4A1R49	0757-0442	9		RESISTOR 10K 1% .125W F TC=0+-100	24546	C4-1/8-T0-1002-F
A4A1R50	0698-5577	5	1	RESISTOR 2.5K .5% .125W F TC=0+-100	24546	C4-1/8-T0-2501-D
A4A1R51	0757-0416	7	2	RESISTOR 511 1% .125W F TC=0+-100	24546	C4-1/8-T0-511R-F
A4A1R52	0698-3155	1		RESISTOR 4.64K 1% .125W F TC=0+-100	24546	C4-1/8-T0-4641-F
A4A1R53	0698-3155	1		RESISTOR 4.64K 1% .125W F TC=0+-100	24546	C4-1/8-T0-4641-F
A4A1R54	0698-3445	2	2	RESISTOR 348 1% .125W F TC=0+-100	24546	C4-1/8-T0-348R-F
A4A1R55	0698-3155	1		RESISTOR 4.64K 1% .125W F TC=0+-100	24546	C4-1/8-T0-4641-F
A4A1R56	0698-0085	0		RESISTOR 2.61K 1% .125W F TC=0+-100	24546	C4-1/8-T0-2611-F
A4A1R57	0757-0416	7		RESISTOR 511 1% .125W F TC=0+-100	24546	C4-1/8-T0-511R-F
A4A1R58	0757-0442	9		RESISTOR 10K 1% .125W F TC=0+-100	24546	C4-1/8-T0-1002-F
A4A1R59	0757-0401	0	1	RESISTOR 100 1% .125W F TC=0+-100	24546	C4-1/8-T0-101-F
A4A1R60	0757-0437	2	2	RESISTOR 4.75K 1% .125W F TC=0+-100	24546	C4-1/8-T0-4751-F
A4A1R61	0698-4123	5	1	RESISTOR 499 1% .125W F TC=0+-100	24546	C4-1/8-T0-499R-F
A4A1R62	0757-0280	3	1	RESISTOR 1K 1% .125W F TC=0+-100	24546	C4-1/8-T0-1001-F
A4A1R63	0698-4376	0	1	RESISTOR 32.4 1% .125W F TC=0+-100	24546	C4-1/8-T0-32R4-F
A4A1R64	0698-3445	2		RESISTOR 348 1% .125W F TC=0+-100	24546	C4-1/8-T0-348R-F
A4A1R65	0757-0437	2		RESISTOR 4.75K 1% .125W F TC=0+-100	24546	C4-1/8-T0-4751-F
A4A1R66	0757-0289	2	1	RESISTOR 13.3K 1% .125W F TC=0+-100	19701	MF4C1/8-T0-1332-F
A4A1R67*	0757-0459	8	1	RESISTOR 56.2K 1% .125W F TC=0+-100	24546	C4-1/8-T0-5622-F
A4A1TP1	1251-0600	0	3	CONNECTOR-SGL CONT PIN 1.14-MM-BSC-SZ SQ	28480	1251-0600
A4A1TP2	1251-0600	0		CONNECTOR-SGL CONT PIN 1.14-MM-BSC-SZ SQ	28480	1251-0600
A4A1TP3	1251-0600	0		CONNECTOR-SGL CONT PIN 1.14-MM-BSC-SZ SQ	28480	1251-0600
A4A1U1	5081-8117	3	1	SCREEN 1826-0092	28480	5081-8117
A4A1U2	1826-0089	8	1	IC OP AMP WB TO-99 PKG	29832	1322
A4A1U3	1826-0021	8	1	IC OP AMP GP TO-99 PKG	27014	LM318H
A4A1U4	1826-0417	6	1	IC SWITCH ANLG QUAD 16-DIP-C PKG	27014	LF13333D
A4A1U5	1810-0215	9	1	NETWORK-RES 8-SIP75.0K OHM X 7	01121	208A753
A4A1U6	1826-1058	3	1	IC OP AMP GP 8-TO-99 PKG	28480	1826-1058
A4A1U7	1826-1020	9	1	ANALOG SWITCH 2 SPST 10-METAL	28480	1826-1020
A4A1U8	1820-1216	3	1	IC DCDR TTL LS 3-TO-8-LINE 3-INP	01295	SN74LS138N
A4A1U9				NOT ASSIGNED		
A4A1U10	1820-0586	8	1	IC INV TTL L HEX 1-INP	01295	SN74L04N
A4A1U11	1820-1272	1	1	IC BFR TTL LS NOR QUAD 2-INP	01295	SN74LS33N
A4A1VR1	1902-0686	3	2	DIODE-ZNR 6.2V 2% DO-7 PD=.4W TC=+.002%	04713	1N825
A4A1VR2	1902-0686	3		DIODE-ZNR 6.2V 2% DO-7 PD=.4W TC=+.002%	04713	1N825
				MISCELLANEOUS PARTS		
	85662-20041	5	1	CVR VIDEO PROCSR	28480	85662-20041
	86701-40001	9	2	EXTRACTOR PC	28480	86701-40001

*Indicates factory selected value

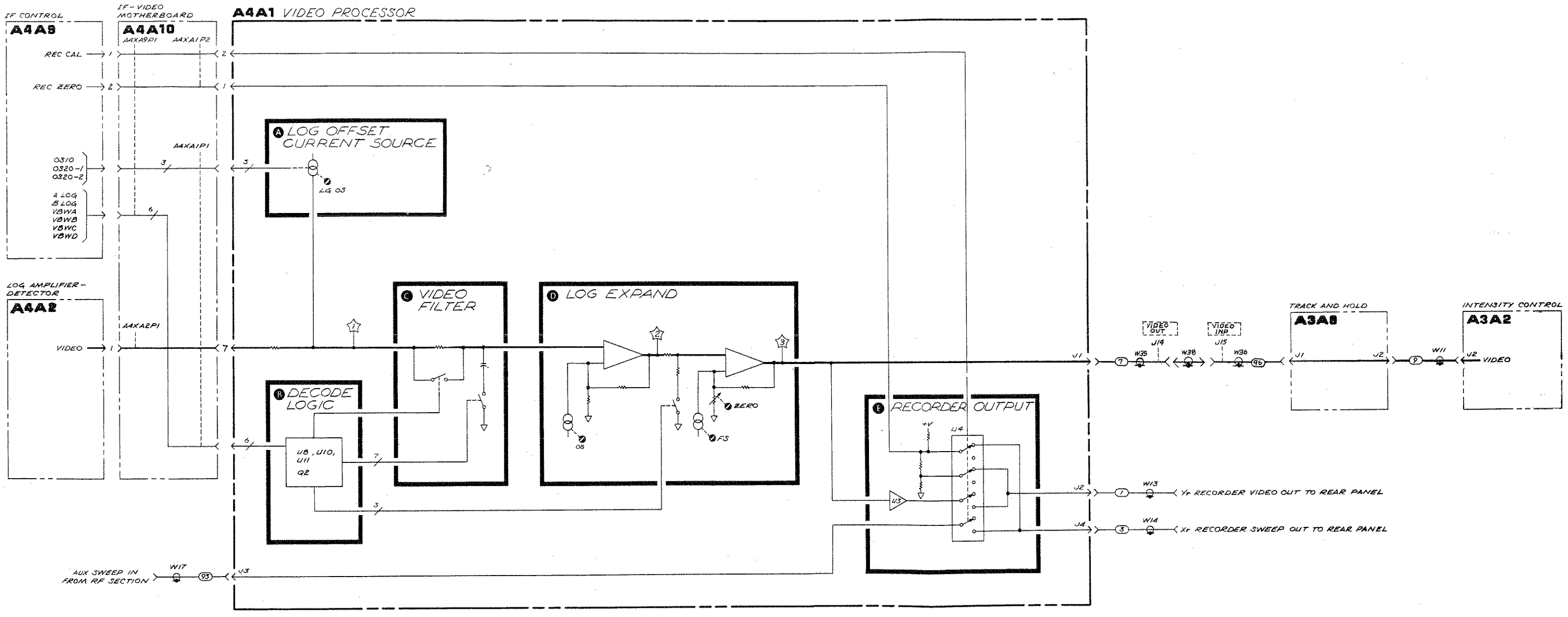

A4A1

FIGURE 4. A4A1 VIDEO PROCESSOR, BLOCK DIAGRAM

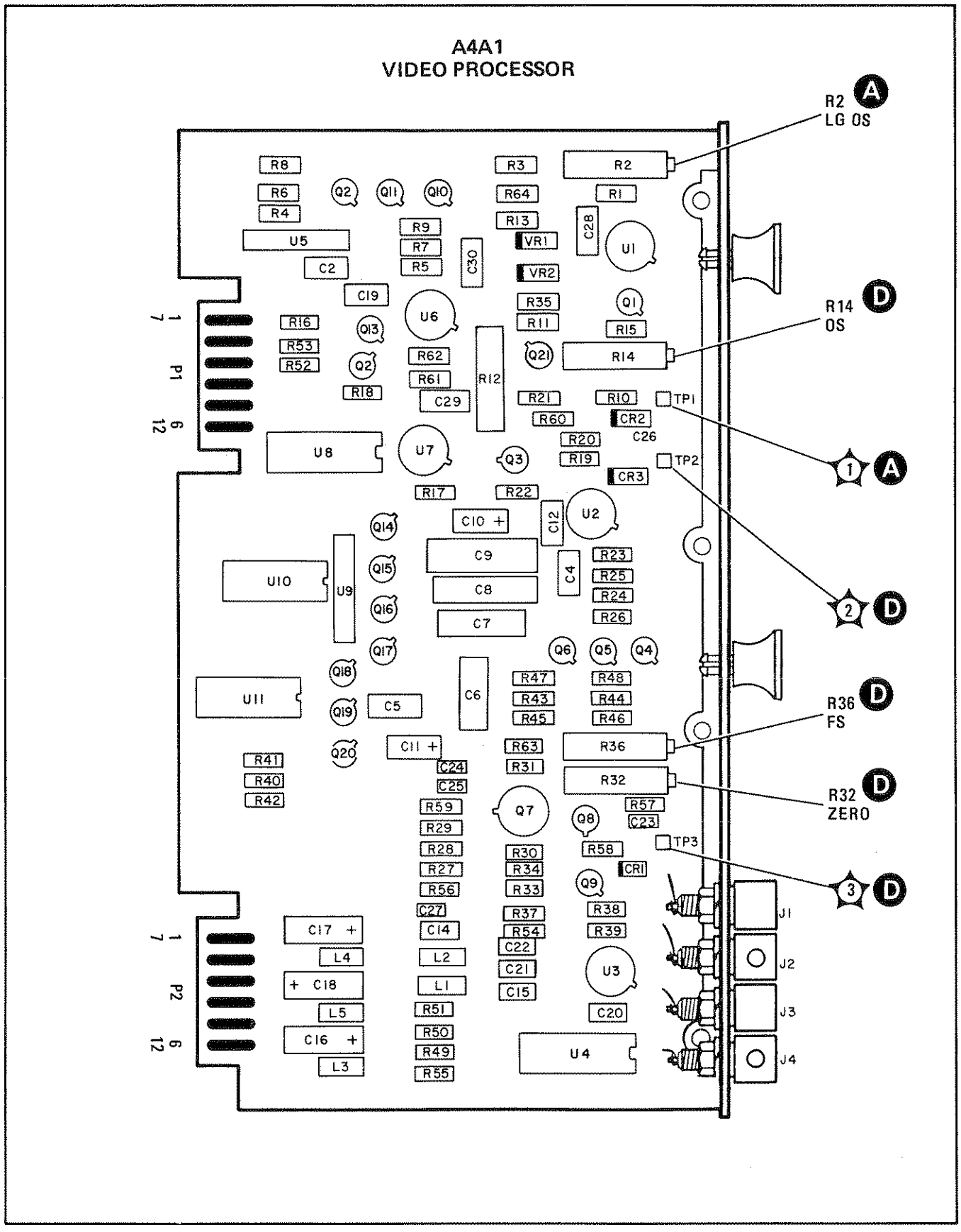

FIGURE 5. A4A1 VIDEO PROCESSOR, COMPONENT LOCATIONS

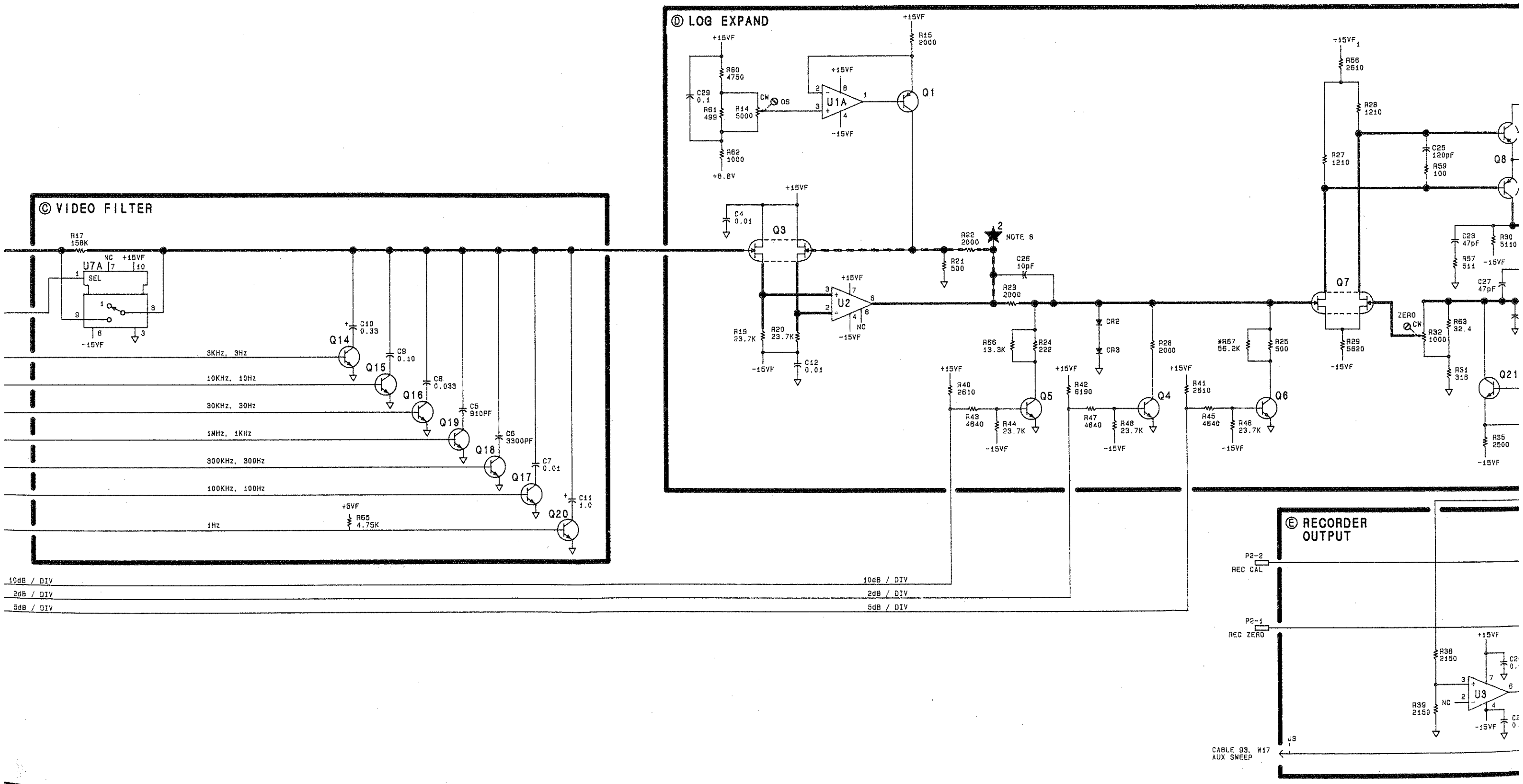

Ⓓ LOG EXPAND
Ⓒ VIDEO FILTER
Ⓔ RECORDER OUTPUT
U7A
SEL
NC
+15VF
-15VF
R17 158K
3KHz, 3Hz
10KHz, 10Hz
30KHz, 30Hz
1MHz, 1KHz
300KHz, 300Hz
100KHz, 100Hz
1Hz
Q14
Q15
Q16
Q19
Q18
Q17
Q20
C10 0.33
C9 0.10
C8 0.033
C5 910PF
C6 3300PF
C7 0.01
C11 1.0
+5VF
R65 4.75K
10dB / DIV
2dB / DIV
5dB / DIV
U1A
U2
Q1
Q3
Q4
Q5
Q6
Q7
Q8
Q21
R15 2000
R60 4750
R61 499
R14 5000
R62 1000
+8.8V
C29 0.1
C4 0.01
R19 23.7K
R20 23.7K
C12 0.01
R22 2000
R21 500
NOTE 8
C26 10pF
R23 2000
R66 13.3K
R24 222
R40 2610
R43 4640
R44 23.7K
CR2
CR3
R42 6190
R47 4640
R48 23.7K
R26 2000
R41 2610
R45 4640
R46 23.7K
*R67 56.2K
R25 500
R56 2610
R28 1210
R27 1210
R29 5620
C25 120pF
R59 100
C23 47pF
R57 511
R30 5110
C27 47pF
ZERO
R32 1000
R63 32.4
R31 316
R35 2500
P2-2
REC CAL
P2-1
REC ZERO
R38 2150
R39 2150
U3
J3
CABLE 93, W17
AUX SWEEP

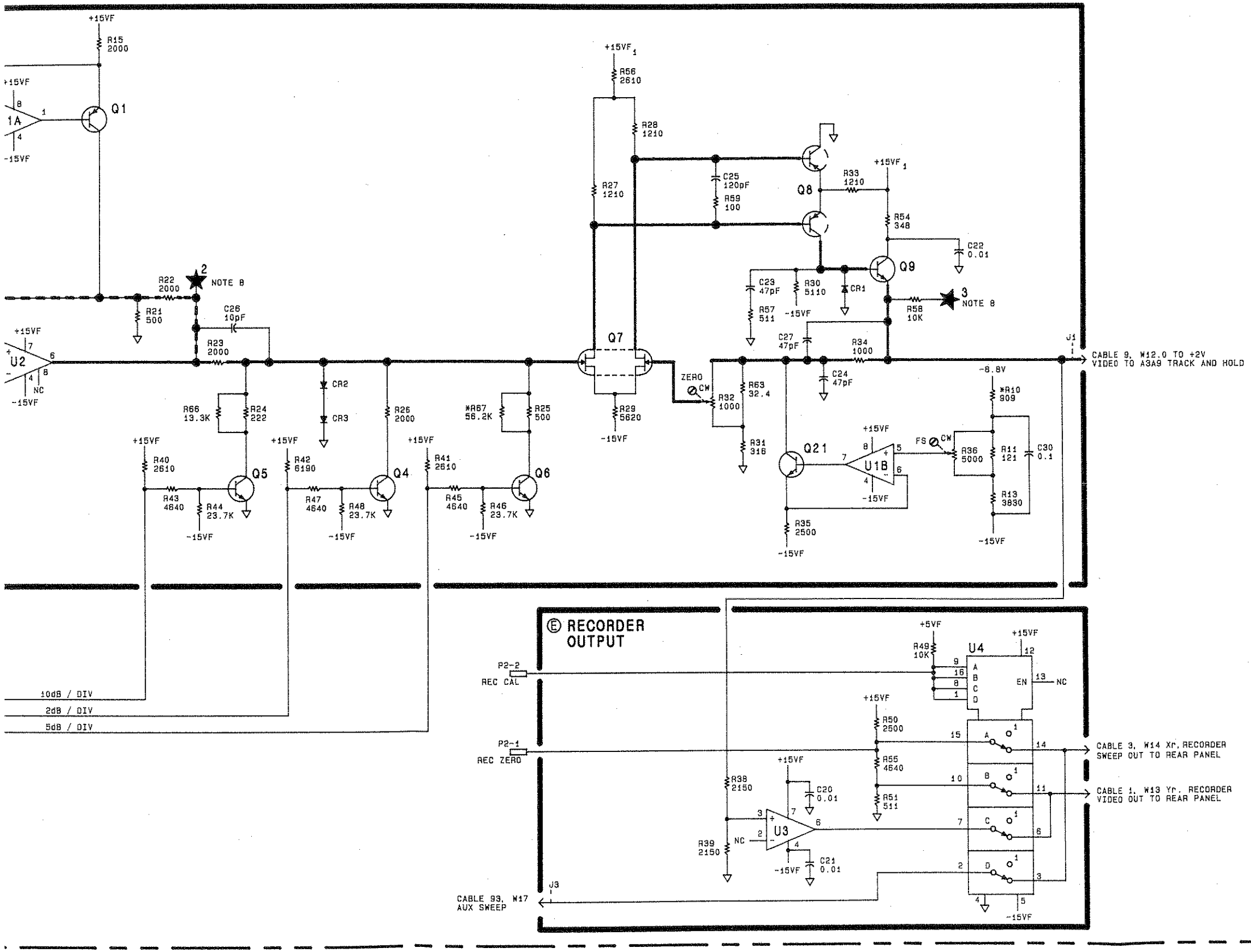

NOTES:

1. REFERENCE DESIGNATORS WITHIN THIS ASSEMBLY ARE ABBREVIATED. FOR COMPLETE REFERENCE DESIGNATION, PREFIX ABBREVIATION WITH ASSEMBLY DESIGNATION.

2. UNLESS OTHERWISE INDICATED:
   RESISTANCE IS IN OHMS (Ω)
   CAPACITANCE IS IN MICROFARADS (μF)
   INDUCTANCE IS IN MICROHENRIES (μH)

3. MNEMONIC TABLE:

MNEMONIC	DESCRIPTION
VBWA	VIDEO BANDWIDTH (LSB)
VBWB	VIDEO BANDWIDTH
VBWC	VIDEO BANDWIDTH
VBWD	VIDEO BANDWIDTH (MSB)
A LOG	LOG SCALE (LSB)
B LOG	LOG SCALE (MSB)
OS10	LOG OFFSET 10dB
OS20-1	LOG OFFSET 20dB-1
OS20-2	LOG OFFSET 20dB-2
REC ZERO	RECORDER LOWER LEFT
REC CAL	RECORDER LOWER LEFT OR UPPER RIGHT
VIDEO	DETECTED IF SIGNAL

4. UNLESS OTHERWISE INDICATED, LOGIC LEVELS ARE TTL:
   +3.6V TO +5.0V = LOGIC'1' = HIGH
   0V TO +0.8V = LOGIC'0' = LOW

5. OFFSET GAIN STEPS TRUTH TABLE:

LOG REF LEVEL		OS10	OS20-1	OS20-2
RES BW ≥3KHz	RES BW <3KHz			
-70 TO -79.9dBM	-90 TO -99.9	0V	>+14V	>+14V
-80 TO 89.9dBM	-100 TO -109.9	>+14V	0V	>+14V
-90 TO -99.9dBM	-110 TO -119.9	0V	0V	>+14V
-100 TO -109.9dBM	-120 TO -129.9	>+14V	0V	0V
-110 TO -119.9dBM	-130 TO -139.9	0V	0V	0V
INPUT ATTENUATOR 0dB SHIFT ATTENUATOR (FOR EXTENDED RANGE)				

6. VIDEO BANDWIDTH TRUTH TABLE:

VIDEO BANDWIDTH	VBWD	VBWC	VBWB	VBWA
3MHz	H	H	H	H
1MHz	H	H	H	L
300KHz	H	H	L	H
100KHz	H	H	L	L
30KHz	H	L	H	H
10KHz	H	L	H	L
3KHz	H	L	L	H
1KHz	L	H	H	L
300Hz	L	H	L	H
100Hz	L	H	L	L
30Hz	L	L	H	H
10Hz	L	L	H	L
3Hz	L	L	L	H
1Hz	L	L	L	L

7. LOG EXPAND TRUTH TABLE:

LOG SCALE	B LOG	A LOG
10 dB / DIV	L	L
5 dB / DIV	L	H
2 dB / DIV	H	L
1 dB / DIV	H	H

8. LOG EXPAND FIDELITY TABLE
   INSTRUMENT CONTROL SETTINGS ARE AS FOLLOWS:
   INSTRUMENT PRESET
   CENTER FREQUENCY 20 MHz
   FREQUENCY SPAN 0 Hz
   ATTENUATOR 0 dB
   CONNECT 365D ATTENUATOR BETWEEN CALIBRATOR OUTPUT AND SIGNAL

EXTERNAL ATTENUATOR	TP1	TP2	TP3
0dB	+1V	0V	+2V
50dB	+0.5V	-2.5V	+1V
50dB*	0V	-5V	0V
*PUSH LINEAR BUTTON			

9. RECORDER OUTPUT TABLE:

	REC CAL	REC ZERO	J4 OUTPUT	J2 OUTPUT
LOWER LEFT ACTIVATED	0V	0V	0V	0V
UPPER RIGHT ACTIVATED	0V	+10V	+10V	+1V
RECORDER LIMITS NOT ACTIVATED	+5V	+10V	SWEEP	VIDEO

10. UNLESS OTHERWISE INDICATED:
    SIGNALS ENTER AT LEFT SIDE OR TOP AT
    EXIT RIGHT SIDE OR BOTTOM OF FUNCTIO
    BLOCKS.

A4A1

FIGURE 6. A4A1 VIDEO PROCESSOR ASSEMBLY , SCHEMATIC DIAGRAM

A4A2 LOG AMPLIFIER-DETECTOR, CIRCUIT DESCRIPTION

A4A2 Log Amplifier-Detector Assembly contains the last four of the nine log amplifier stages. (The first five stages are in A4A3 Log Amplifier-Filter.) The first two stages in this assembly (Stage 6 and Stage 7) are also used in linear mode as a switchable 20 dB gain step. Following the last log stage, the 21.4 MHz IF signal is applied to a PIN diode attenuator. In log mode, this attenuation is varied with temperature to compensate for bias variations in the log stages. After passing through the PIN attenuator, the IF signal is detected to produce the vertical (video) signal which is applied to A4A1 Video Processor. The 21.4 MHz signal is attenuated and sent to the 21.4 MHz IF OUTPUT connector on the rear panel.

The control circuit of A4A2 contains log/linear switching circuitry and 20 dB linear gain step switching circuitry. Also contained in A4A2 is a temperature-dependent power supply which biases the log stages in A4A2 and A4A3. A similar temperature-dependent bias supply controls the attenuation of the PIN Diode Attenuator.

Log Amplifier Stages (A)

A4A2 contains the last four of the nine log amplifier stages. (Refer to A4A3 Log Amplifier-Filter for a description of log amplifier stages.) The operation of each stage is essentially identical to that of the log stages in A4A3.

LOG Mode. In LOG mode, the LOG/LIN control line from A4A9 IF Control is high (about +7V). Q9 is turned on, connecting the log diode bias resistor of each stage to the −12 VTV supply through CR16 and CR18. Q8 is off and PIN diodes CR12 and CR15 are reverse biased through R50. The LG2Ø control line from A4A9 IF Control Assembly is low in LOG mode, so Q10 is off and CR6 and CR9 are reverse biased. Thus all log diodes are on, and linear gain PIN diodes are off. The logged IF signal is applied through Q14 to the PIN Diode Attenuator, the Detector, and the Counter Output Limiter.

LINEAR Mode. Each of the log stages in this assembly provides linear gain through the use of a switchable PIN diode signal path. In LINEAR mode, the LOG/LIN control line is pulled to the −12 VTV supply through R101. This turns off Q9, removing the bias current from all log diodes. As the Q9 collector is pulled high through R46, the Q8 collector saturates to the −12 VTV supply, forward biasing PIN diodes CR2 and CR15 through CR21 in Log Amplifier Stages 8 and 9. Since PIN diode resistance is not affected by signal level, Stages 8 and 9 become non-limiting amplifiers with combined gain of approximately 15 dB. R36 is factory selected to adjust the gain of Stage 9 in LINEAR mode. This gain is necessary to obtain a 1V (full screen) video output in linear mode at approximately the same input level to the IF module that causes a 1V (full screen) output in LOG mode.

20 dB Linear Gain Step. Stages 6 and 7 are used as a switchable 20 dB gain step in LINEAR mode at low reference levels. When the LG2Ø control line is high (more positive than −5V), the Q10 collector saturates to the −12 VTV supply, turning on PIN diodes CR6 and CR9 in Log Amplifier Stages 6 and 7. Stage 6 and 7 each provide approximately 10 dB of non-limiting gain when LG2Ø is high. The combined gain of stages 6 and 7 is adjusted to 20 dB by varying the resistance of CR6. R14 sets the bias current and thus the resistance of CR6.

Pin Diode Attenuator (C)

In LOG mode, attenuation of the PIN Diode Attenuator is varied with temperature to compensate for bias variations with temperature in the Log Amplifier Stages. The attenuation is removed in the LINEAR mode.

LOG Mode. In LOG mode, Q7 is turned off because Q8 is off. CR30 is forward biased by the LOG/LIN control line through R63. PIN diodes CR28 and CR29 are forward biased by U1B through R62 and R61. PIN diodes CR26 and CR27 operate with fixed bias current through R56 and R57. CR26 through CR29 form a resistive voltage divider with CR28 and CR29 operating as a variable resistance. Op amp U1, which biases CR28 and CR29, is a temperature dependent voltage source. The voltage at U1 pin 7 becomes more negative as temperature increases, causing the attenuation to increase. The attenuation of the PIN Diode Attenuator is set by R61 (refer to ATTEN and −12 VTV Adjustments).

LINEAR Mode. In LINEAR mode, Q9 is off and Q8 and Q7 are on. Q7 supplies additional drive for CR26 and CR27 through R58. This biases CR26 and CR27 so that their resistance is small (<50Ω total). CR28 and CR29 are reverse biased through R63, since LOG/LIN is pulled to −12 VTV in linear mode. There is no attenuation, and the signal from Q14 is coupled directly to emitter follower Q5.

Detector Driver. The signal output from the PIN Diode attenuator is applied to emitter follower Q5, which provides low-impedance drive for the Detector. Bias for Q5 is supplied by R65, which with R64 forms a voltage divider for the signal from the Q5 emitter. The signal at J1 is linearly related to the displayed vertical signal in both LINEAR and LOG modes. The signal is sent by coax cable to the 21.4 MHz IF OUTPUT connector on the rear panel.

Temperature-Dependent Regulators (D)

The −12 VTV and PIN Diode Regulators provide temperature compensation for the Log Amplifier Stages. CR37 and CR38 operate as the temperature sensing elements to control the two voltages. U1A controls Q11 to regulate the −12 VTV supply, which provides a nominal −12V to a filter network for distribution throughout the Log Amplifier assemblies. The −12 VTV voltage is adjusted to provide proper log fidelity; it becomes more negative as temperature increases to correct for variations in log diode resistance. U1B produces a nominal −7V and forms the current source for CR28 and CR29 in the PIN Diode Attenuator. The voltage of U1B pin 7 becomes more negative as temperature increases to control the attenuation of the PIN Diode Attenuator.

ATTEN (C) and −12 VTV Adjustments (D)

The PIN Diode Attenuator adjustment (ATTEN potentiometer R61) is essentially a gain adjustment that varies the slope of the log curve. The −12 VTV adjustment (−12 VTV potentiometer R91 in the Temperature-Dependent Regulators circuit) varies the offset and slope of the log curve. These two adjustments (which interact) are used to set the output versus input curve in log mode. The IF input signal level, which causes a 1V (full screen) output in LINEAR mode, is used as a reference for full-scale deflection in LOG mode. The ATTEN and −12 VTV adjustments are made to give a 1V video output in both LOG and LINEAR modes for the same IF input signal level, and a 100 mV video output change for a 10 dB IF signal change in LOG mode.

Detector (E)

Q1 through Q4 and associated circuitry form a full wave rectifier to convert the IF signal to a video signal. Q4 is the current driver for the detector and converts voltage variations at the Q5 emitter to current variations which drive Q2 and Q3. Q3 is a half wave rectifier and conducts when the signal at the Q5 emitter is positive. The Q3 collector current is applied to the low-pass filter consisting of R75, R76, L12 through L14, and C51 through C54. When the signal at the Q5 collector goes negative, current generated in the Q4 collector is pulled out of the Q2 emitter. Q1 forms a current mirror, which drives current into the low-pass filter when Q2 collector current flows. Thus current flows into the low-pass filter on both positive and negative halves of the IF signal at the Q5 emitter. CR31, CR32, CR33, and R72 keep Q2 and Q3 biased slightly below cutoff. When current flows into the low-pass filter from Q1 or Q3, a positive voltage is developed across R75 and R76. The voltage developed is proportional to the IF signal level at the Q5 emitter. The low-pass filter has a bandwidth of about 7 MHz to remove IF frequencies from the detected video output signal. The detected voltage is applied to unity gain buffer amplifier Q12 and Q13 to drive A4A1 Video Processor. The offset of differential pair Q12 is removed by ZERO adjustment R79.

Counter Output Limiter (F)

The Counter Output Limiter provides an amplitude-limited signal at the IF frequency used for frequency counting. The IF signal from detector driver Q5 is buffered by Q6. CR35 and CR36 are biased to cutoff for signal levels corresponding to greater than a one-division display. In LOG or LINEAR mode, the counter output remains at approximately −30 dBm for signal levels displayed in the top nine divisions of the display.

A4A2 LOG AMPLIFIER-DETECTOR, TROUBLESHOOTING

If the amplitude of the displayed signals is approximately 10 dB low (i.e., CAL OUTPUT appears to be −20 dBm) in the log mode but correct in the linear display mode, then one of the log amplifier stages in the A4A3 Log Amplifier-Filter board or the A4A2 Log Amplifier-Detector board is defective. Connect a 10 dB step attenuator between the CAL OUTPUT and Spectrum Analyzer input. Refer to the Log Amplifier Stage Gain Check note on the service sheets for the necessary front panel control settings. When forward biased in log mode, the Schottky diodes should have voltage drops of 200 to 400 mV.

The following procedure will determine if the Linear Gain Steps, LG1Ø and LG2Ø, are operating properly. The LG1Ø circuitry is located on the A4A3 Log Amplifier-Filter board while the LG2Ø circuitry is located on the A4A2 Log Amplifier-Detector board. Connect a 10 dB step attenuator set to 0 dB between the CAL OUTPUT and the Spectrum Analyzer input. Press Instrument Preset and key in the following settings:

[CENTER FREQUENCY] ..... equal to the CAL OUTPUT frequency
[FREQUENCY SPAN] ..... 10 kHz
[RES BW] ..... 3 kHz
[ATTEN] ..... 0 dB
[SHIFT] LOG SCALE [ENTER dB/DIV] (Turns off IF Step Gains)
[REFERENCE LEVEL] ..... −60 dBm
SCALE LIN

The peak of the displayed signal should be on the top graticule. Adjust the front panel AMPTD CAL control to place the peak of the signal one division below the top graticule. If the signal limits at the top of the display, one of the Linear Gain Steps is stuck in the on state.

Set the 10 dB step attenuator to 10 dB and key in [REFERENCE LEVEL] −70 dBm. The peak of the displayed signal should be one division below the top graticule. If signal limits at the top of the display, the LG2Ø circuitry is defective. A signal approximately 3 divisions high indicates the LG1Ø circuitry is defective.

Set the 10 dB step attenuator to 20 dB and key in [REFERENCE LEVEL] −80 dBm. The peak of the displayed signal should be one division below the top graticule. The LG1Ø circuitry is defective if the signal limits at the top of the display.The LG2Ø circuitry is faulty if the displayed signal is approximately 3 divisions high.

The detector circuit on the A4A2 Log Amplifier-Detector board is most easily checked with dc voltages. These are derived using 0 Hz [CENTER FREQUENCY] and attenuating the CAL OUTPUT signal. The easiest point to check the Detector output without removing boards is A4A1TP1. Connect a DVM to this test point. The voltage at A4A1TP1 should be +1V for a signal displayed on the top graticule. The output will be 0.1V less for each division down from the top in either the linear or the 10 dB/DIV log modes when the detector is operating properly.

TABLE 1. A4A2, REPLACEABLE PARTS (1 OF 4)

Reference Designation	HP Part Number	C D	Qty	Description	Mfr Code	Mfr Part Number
A4A2	85662-60096	4	1	LOG AMPLIFIER (INCLUDES A4A2 AND A4A3)	28480	85662-60096
A4A2	85662-60097	5	1	RESTORED 85662-60096	28480	85662-60097
A4A2	85662-60132	9	1	BOARD ASSEMBLY, LOG AMPLIFIER-DETECTOR	28480	85662-60132
A4A2C1				NOT ASSIGNED		
A4A2C2				NOT ASSIGNED		
A4A2C3	0160-2055	9	50	CAPACITOR-FXD .01UF +80-20% 100VDC CER	28480	0160-2055
A4A2C4	0160-2055	9		CAPACITOR-FXD .01UF +80-20% 100VDC CER	28480	0160-2055
A4A2C5	0160-2055	9		CAPACITOR-FXD .01UF +80-20% 100VDC CER	28480	0160-2055
A4A2C6	0160-2055	9		CAPACITOR-FXD .01UF +80-20% 100VDC CER	28480	0160-2055
A4A2C7	0160-2055	9		CAPACITOR-FXD .01UF +80-20% 100VDC CER	28480	0160-2055
A4A2C8	0160-2055	9		CAPACITOR-FXD .01UF +80-20% 100VDC CER	28480	0160-2055
A4A2C9	0160-2055	9		CAPACITOR-FXD .01UF +80-20% 100VDC CER	28480	0160-2055
A4A2C10	0160-2055	9		CAPACITOR-FXD .01UF +80-20% 100VDC CER	28480	0160-2055
A4A2C11	0160-2055	9		CAPACITOR-FXD .01UF +80-20% 100VDC CER	28480	0160-2055
A4A2C12	0160-2055	9		CAPACITOR-FXD .01UF +80-20% 100VDC CER	28480	0160-2055
A4A2C13	0160-2055	9		CAPACITOR-FXD .01UF +80-20% 100VDC CER	28480	0160-2055
A4A2C14	0160-2055	9		CAPACITOR-FXD .01UF +80-20% 100VDC CER	28480	0160-2055
A4A2C15	0160-2055	9		CAPACITOR-FXD .01UF +80-20% 100VDC CER	28480	0160-2055
A4A2C16	0160-2055	9		CAPACITOR-FXD .01UF +80-20% 100VDC CER	28480	0160-2055
A4A2C17	0160-2055	9		CAPACITOR-FXD .01UF +80-20% 100VDC CER	28480	0160-2055
A4A2C18	0160-2055	9		CAPACITOR-FXD .01UF +80-20% 100VDC CER	28480	0160-2055
A4A2C19	0160-2055	9		CAPACITOR-FXD .01UF +80-20% 100VDC CER	28480	0160-2055
A4A2C20	0160-2055	9		CAPACITOR-FXD .01UF +80-20% 100VDC CER	28480	0160-2055
A4A2C21	0160-2055	9		CAPACITOR-FXD .01UF +80-20% 100VDC CER	28480	0160-2055
A4A2C22	0160-2055	9		CAPACITOR-FXD .01UF +80-20% 100VDC CER	28480	0160-2055
A4A2C23	0160-2055	9		CAPACITOR-FXD .01UF +80-20% 100VDC CER	28480	0160-2055
A4A2C24	0160-2055	9		CAPACITOR-FXD .01UF +80-20% 100VDC CER	28480	0160-2055
A4A2C25	0160-2055	9		CAPACITOR-FXD .01UF +80-20% 100VDC CER	28480	0160-2055
A4A2C26	0160-2055	9		CAPACITOR-FXD .01UF +80-20% 100VDC CER	28480	0160-2055
A4A2C27	0160-2055	9		CAPACITOR-FXD .01UF +80-20% 100VDC CER	28480	0160-2055
A4A2C28	0160-2055	9		CAPACITOR-FXD .01UF +80-20% 100VDC CER	28480	0160-2055
A4A2C29	0160-2055	9		CAPACITOR-FXD .01UF +80-20% 100VDC CER	28480	0160-2055
A4A2C30	0160-2055	9		CAPACITOR-FXD .01UF +80-20% 100VDC CER	28480	0160-2055
A4A2C31				NOT ASSIGNED		
A4A2C32	0160-2055	9		CAPACITOR-FXD .01UF +80-20% 100VDC CER	28480	0160-2055
A4A2C33	0160-2055	9		CAPACITOR-FXD .01UF +80-20% 100VDC CER	28480	0160-2055
A4A2C34	0160-2055	9		CAPACITOR-FXD .01UF +80-20% 100VDC CER	28480	0160-2055
A4A2C35				NOT ASSIGNED		
A4A2C36	0160-2055	9		CAPACITOR-FXD .01UF +80-20% 100VDC CER	28480	0160-2055
A4A2C37	0160-2055	9		CAPACITOR-FXD .01UF +80-20% 100VDC CER	28480	0160-2055
A4A2C38	0160-2055	9		CAPACITOR-FXD .01UF +80-20% 100VDC CER	28480	0160-2055
A4A2C39	0160-2055	9		CAPACITOR-FXD .01UF +80-20% 100VDC CER	28480	0160-2055
A4A2C40	0160-2055	9		CAPACITOR-FXD .01UF +80-20% 100VDC CER	28480	0160-2055
A4A2C41	0160-2055	9		CAPACITOR-FXD .01UF +80-20% 100VDC CER	28480	0160-2055
A4A2C42	0160-2055	9		CAPACITOR-FXD .01UF +80-20% 100VDC CER	28480	0160-2055
A4A2C43	0160-2055	9		CAPACITOR-FXD .01UF +80-20% 100VDC CER	28480	0160-2055
A4A2C44	0160-4084	8	1	CAPACITOR-FXD .1UF +-20% 50VDC CER	28480	0160-4084
A4A2C45				NOT ASSIGNED		
A4A2C46	0160-2055	9		CAPACITOR-FXD .01UF +80-20% 100VDC CER	28480	0160-2055
A4A2C47				NOT ASSIGNED		
A4A2C48	0160-2055	9		CAPACITOR-FXD .01UF +80-20% 100VDC CER	28480	0160-2055
A4A2C49	0160-2055	9		CAPACITOR-FXD .01UF +80-20% 100VDC CER	28480	0160-2055
A4A2C50	0160-2055	9		CAPACITOR-FXD .01UF +80-20% 100VDC CER	28480	0160-2055
A4A2C51	0160-2262	0	1	CAPACITOR-FXD 16PF +-5% 500VDC CER 0+-30	28480	0160-2262
A4A2C52	0160-2200	6	1	CAPACITOR-FXD 43PF +-5% 300VDC MICA	28480	0160-2200
A4A2C53	0160-2307	4	1	CAPACITOR-FXD 47PF +-5% 300VDC MICA	28480	0160-2307
A4A2C54	0160-2205	1	1	CAPACITOR-FXD 120PF +-5% 300VDC MICA	28480	0160-2205
A4A2C55	0160-2055	9		CAPACITOR-FXD .01UF +80-20% 100VDC CER	28480	0160-2055
A4A2C56-A4A2C59	0160-2055	9		CAPACITOR-FXD .01UF +80-20% 100VDC CER	28480	0160-2055
A4A2C60				NOT ASSIGNED		
A4A2C61				NOT ASSIGNED		
A4A2C62	0160-2055	9		CAPACITOR-FXD .01UF +80-20% 100VDC CER	28480	0160-2055
A4A2C63	0160-2055	9		CAPACITOR-FXD .01UF +80-20% 100VDC CER	28480	0160-2055
A4A2C64	0160-2055	9		CAPACITOR-FXD .01UF +80-20% 100VDC CER	28480	0160-2055
A4A2C65	0160-2055	9		CAPACITOR-FXD .01UF +80-20% 100VDC CER	28480	0160-2055
A4A2C66	0180-0228	6	1	CAPACITOR-FXD 22UF+-10% 15VDC TA	56289	150D226X9015B2
A4A2C67				NOT ASSIGNED		
A4A2C68	0160-4297	5	7	CAPACITOR-FXD .022UF +80-20% 100VDC CER	56289	C023F101H223ZS22-CDH
A4A2C69	0160-4297	5		CAPACITOR-FXD .022UF +80-20% 100VDC CER	56289	C023F101H223ZS22-CDH
A4A2C70	0160-4297	5		CAPACITOR-FXD .022UF +80-20% 100VDC CER	56289	C023F101H223ZS22-CDH
A4A2C71	0160-4297	5		CAPACITOR-FXD .022UF +80-20% 100VDC CER	56289	C023F101H223ZS22-CDH
A4A2C72	0160-4297	5		CAPACITOR-FXD .022UF +80-20% 100VDC CER	56289	C023F101H223ZS22-CDH

TABLE 1. A4A2, REPLACEABLE PARTS (2 OF 4)

Reference Designation	HP Part Number	C D	Qty	Description	Mfr Code	Mfr Part Number
A4A2C73	0160-4297	5		CAPACITOR-FXD .022UF +80-20% 100VDC CER	56289	C023F101H223ZS22-CDH
A4A2C74	0160-2055	9		CAPACITOR-FXD .01UF +80-20% 100VDC CER	28480	0160-2055
A4A2C75	0160-4297	5		CAPACITOR-FXD .022UF +80-20% 100VDC CER	56289	C023F101H223ZS22-CDH
A4A2CR1- A4A2CR3				NOT ASSIGNED		
A4A2CR4	1901-1085	6	8	DIODE-SM SIG SCHOTTKY	28480	1901-1085
A4A2CR5	1901-1085	6		DIODE-SM SIG SCHOTTKY	28480	1901-1085
A4A2CR6	1901-1070	9	8	DIODE-PIN 110V	28480	1901-1070
A4A2CR7	1901-1085	6		DIODE-SM SIG SCHOTTKY	28480	1901-1085
A4A2CR8	1901-1085	6		DIODE-SM SIG SCHOTTKY	28480	1901-1085
A4A2CR9	1901-1070	9		DIODE-PIN 110V	28480	1901-1070
A4A2CR10	1901-1085	6		DIODE-SM SIG SCHOTTKY	28480	1901-1085
A4A2CR11	1901-1085	6		DIODE-SM SIG SCHOTTKY	28480	1901-1085
A4A2CR12	1901-1070	9		DIODE-PIN 110V	28480	1901-1070
A4A2CR13	1901-1085	6		DIODE-SM SIG SCHOTTKY	28480	1901-1085
A4A2CR14	1901-1085	6		DIODE-SM SIG SCHOTTKY	28480	1901-1085
A4A2CR15	1901-1070	9		DIODE-PIN 110V	28480	1901-1070
A4A2CR16	1901-0047	8	10	DIODE-SWITCHING 20V 75MA 10NS	28480	1901-0047
A4A2CR17				NOT ASSIGNED		
A4A2CR18	1901-0047	8		DIODE-SWITCHING 20V 75MA 10NS	28480	1901-0047
A4A2CR19	1901-0047	8		DIODE-SWITCHING 20V 75MA 10NS	28480	1901-0047
A4A2CR20	1901-0047	8		DIODE-SWITCHING 20V 75MA 10NS	28480	1901-0047
A4A2CR21	1901-0047	8		DIODE-SWITCHING 20V 75MA 10NS	28480	1901-0047
A4A2CR22- A4A2CR25				NOT ASSIGNED		
A4A2CR26	1901-1070	9		DIODE-PIN 110V	28480	1901-1070
A4A2CR27	1901-1070	9		DIODE-PIN 110V	28480	1901-1070
A4A2CR28	1901-1070	9		DIODE-PIN 110V	28480	1901-1070
A4A2CR29	1901-1070	9		DIODE-PIN 110V	28480	1901-1070
A4A2CR30	1901-0047	8		DIODE-SWITCHING 20V 75MA 10NS	28480	1901-0047
A4A2CR31	1910-0016	0	3	DIODE-GE 60V 60MA 1US DO-7	28480	1910-0016
A4A2CR32	1910-0016	0		DIODE-GE 60V 60MA 1US DO-7	28480	1910-0016
A4A2CR33	1910-0016	0		DIODE-GE 60V 60MA 1US DO-7	28480	1910-0016
A4A2CR35	1901-0047	8		DIODE-SWITCHING 20V 75MA 10NS	28480	1901-0047
A4A2CR36	1901-0047	8		DIODE-SWITCHING 20V 75MA 10NS	28480	1901-0047
A4A2CR37	1901-0047	8		DIODE-SWITCHING 20V 75MA 10NS	28480	1901-0047
A4A2CR38	1901-0047	8		DIODE-SWITCHING 20V 75MA 10NS	28480	1901-0047
A4A2E1	9170-0029	3	8	CORE-SHIELDING BEAD	28480	9170-0029
A4A2E2	9170-0029	3		CORE-SHIELDING BEAD	28480	9170-0029
A4A2E3	9170-0029	3		CORE-SHIELDING BEAD	28480	9170-0029
A4A2E4	9170-0029	3		CORE-SHIELDING BEAD	28480	9170-0029
A4A2E5	9170-0029	3		CORE-SHIELDING BEAD	28480	9170-0029
A4A2E6	9170-0029	3		CORE-SHIELDING BEAD	28480	9170-0029
A4A2E7	9170-0029	3		CORE-SHIELDING BEAD	28480	9170-0029
A4A2E8	9170-0029	3		CORE-SHIELDING BEAD	28480	9170-0029
A4A2J1	1250-0690	6	2	CONNECTOR-RF SMB M SGL-HOLE-FR 50-OHM	28480	1250-0690
A4A2J2	1250-0690	6		CONNECTOR-RF SMB M SGL-HOLE-FR 50-OHM	28480	1250-0690
A4A2L1	9100-1618	1	3	INDUCTOR RF-CH-MLD 5.6UH 10%	28480	9100-1618
A4A2L2	9140-0105	3	2	INDUCTOR RF-CH-MLD 8.2UH 10%	28480	9140-0105
A4A2L3	9140-0114	4	3	INDUCTOR RF-CH-MLD 10UH 10% .166DX.385LG	28480	9140-0114
A4A2L4	9140-0114	4		INDUCTOR RF-CH-MLD 10UH 10% .166DX.385LG	28480	9140-0114
A4A2L5	9100-1619	2	2	INDUCTOR RF-CH-MLD 6.8UH 10%	28480	9100-1619
A4A2L6	9100-1623	8	2	INDUCTOR RF-CH-MLD 27UH 5% .166DX.385LG	28480	9100-1623
A4A2L7	9100-1623	8		INDUCTOR RF-CH-MLD 27UH 5% .166DX.385LG	28480	9100-1623
A4A2L8	9100-1618	1		INDUCTOR RF-CH-MLD 5.6UH 10%	28480	9100-1618
A4A2L9	9100-1618	1		INDUCTOR RF-CH-MLD 5.6UH 10%	28480	9100-1618
A4A2L10	9100-3553	7	1	INDUCTOR RF-CH-MLD 3.9UH 5% .166DX.385LG	28480	9100-3553
A4A2L11				NOT ASSIGNED		
A4A2L12	9140-0105	3		INDUCTOR RF-CH-MLD 8.2UH 10%	28480	9140-0105
A4A2L13	9140-0114	4		INDUCTOR RF-CH-MLD 10UH 10% .166DX.385LG	28480	9140-0114
A4A2L14	9140-0178	0	1	INDUCTOR RF-CH-MLD 12UH 10% .166DX.385LG	28480	9140-0178
A4A2L15- A4A2L49				NOT ASSIGNED		
A4A2L50	9100-1619	2	1	INDUCTOR RF-CH-MLD 6.8UH 10%	28480	9100-1619
A4A2MP1				NOT ASSIGNED		
A4A2MP2				NOT ASSIGNED		
A4A2MP3				NOT ASSIGNED		
A4A2Q1	1853-0075	9	1	TRANSISTOR-DUAL PNP PD=400MW	28480	1853-0075
A4A2Q2	1854-0345	8	2	TRANSISTOR NPN 2N5179 SI TO-72 PD=200MW	04713	2N5179
A4A2Q3	1853-0015	7	1	TRANSISTOR PNP SI PD=200MW FT=500MHZ	28480	1853-0015
A4A2Q4	1854-0345	8		TRANSISTOR NPN 2N5179 SI TO-72 PD=200MW	04713	2N5179
A4A2Q5	1853-0405	9	1	TRANSISTOR PNP SI PD=300MW FT=850MHZ	04713	2N4209

TABLE 1. A4A2, REPLACEABLE PARTS (3 OF 4)

Reference Designation	HP Part Number	C D	Qty	Description	Mfr Code	Mfr Part Number
A4A2Q6	1854-0019	3	9	TRANSISTOR NPN SI TO-18 PD=360MW	28480	1854-0019
A4A2Q7	1853-0281	9	1	TRANSISTOR PNP 2N2907A SI TO-18 PD=400MW	04713	2N2907A
A4A2Q8	1854-0404	0	4	TRANSISTOR NPN SI TO-18 PD=360MW	28480	1854-0404
A4A2Q9	1854-0404	0		TRANSISTOR NPN SI TO-18 PD=360MW	28480	1854-0404
A4A2Q10	1854-0404	0		TRANSISTOR NPN SI TO-18 PD=360MW	28480	1854-0404
A4A2Q11	1854-0637	1	1	TRANSISTOR NPN 2N2219A SI TO-5 PD=800MW	81295	2N2219A
A4A2Q12	1854-0475	5	1	TRANSISTOR-DUAL NPN PD=750MW	28480	1854-0475
A4A2Q13	1854-0404	0		TRANSISTOR NPN SI TO-18 PD=360MW	28480	1854-0404
A4A2Q14	1854-0019	3		TRANSISTOR NPN SI TO-18 PD=360MW	28480	1854-0019
A4A2Q15	1854-0019	3		TRANSISTOR NPN SI TO-18 PD=360MW	28480	1854-0019
A4A2Q16	1854-0019	3		TRANSISTOR NPN SI TO-18 PD=360MW	28480	1854-0019
A4A2Q17	1854-0019	3		TRANSISTOR NPN SI TO-18 PD=360MW	28480	1854-0019
A4A2Q18	1854-0019	3		TRANSISTOR NPN SI TO-18 PD=360MW	28480	1854-0019
A4A2Q19	1854-0019	3		TRANSISTOR NPN SI TO-18 PD=360MW	28480	1854-0019
A4A2Q20	1854-0019	3		TRANSISTOR NPN SI TO-18 PD=360MW	28480	1854-0019
A4A2Q21	1854-0019	3		TRANSISTOR NPN SI TO-18 PD=360MW	28480	1854-0019
A4A2R1	0757-0346	2	9	RESISTOR 10 1% .125W F TC=0+-100	24546	C4-1/8-T0-10R0-F
A4A2R2	0757-0346	2		RESISTOR 10 1% .125W F TC=0+-100	24546	C4-1/8-T0-10R0-F
A4A2R3	0757-0346	2		RESISTOR 10 1% .125W F TC=0+-100	24546	C4-1/8-T0-10R0-F
A4A2R4	0757-0346	2		RESISTOR 10 1% .125W F TC=0+-100	24546	C4-1/8-T0-10R0-F
A4A2R5	0757-0439	4		RESISTOR 6.81K 1% .125W F TC=0+-100	24546	C4-1/8-T0-6811-F
A4A2R6	0757-0279	0	14	RESISTOR 3.16K 1% .125W F TC=0+-100	24546	C4-1/8-T0-3161-F
A4A2R7	0757-0402	1		RESISTOR 110 1% .125W F TC=0+-100	24546	C4-1/8-T0-111-F
A4A2R8	0698-3136	8	9	RESISTOR 17.8K 1% .125W F TC=0+-100	24546	C4-1/8-T0-1782-F
A4A2R9	0698-3136	8		RESISTOR 17.8K 1% .125W F TC=0+-100	24546	C4-1/8-T0-1782-F
A4A2R10	0698-3444	1	5	RESISTOR 316 1% .125W F TC=0+-100	24546	C4-1/8-T0-316R-F
A4A2R11	0757-0439	4		RESISTOR 6.81K 1% .125W F TC=0+-100	24546	C4-1/8-T0-6811-F
A4A2R12	0757-0279	0		RESISTOR 3.16K 1% .125W F TC=0+-100	24546	C4-1/8-T0-3161-F
A4A2R13	0757-0280	3	6	RESISTOR 1K 1% .125W F TC=0+-100	24546	C4-1/8-T0-1001-F
A4A2R14	2100-3161	6	1	RESISTOR-TRMR 20K 10% C SIDE-ADJ 17-TRN	02111	43P203
A4A2R15	0757-0439	4		RESISTOR 6.81K 1% .125W F TC=0+-100	24546	C4-1/8-T0-6811-F
A4A2R16	0757-0279	0		RESISTOR 3.16K 1% .125W F TC=0+-100	24546	C4-1/8-T0-3161-F
A4A2R17	0698-3444	1		RESISTOR 316 1% .125W F TC=0+-100	24546	C4-1/8-T0-316R-F
A4A2R18*	0757-0402	1	2	RESISTOR 110 1% .125W F TC=0+-100	24546	C4-1/8-T0-111-F
A4A2R19	0757-0279	0		RESISTOR 3.16K 1% .125W F TC=0+-100	24546	C4-1/8-T0-3161-F
A4A2R20	0698-3136	8		RESISTOR 17.8K 1% .125W F TC=0+-100	24546	C4-1/8-T0-1782-F
A4A2R21	0698-3136	8		RESISTOR 17.8K 1% .125W F TC=0+-100	24546	C4-1/8-T0-1782-F
A4A2R22*	0698-3153	9	3	RESISTOR 3.83K 1% .125W F TC=0+-100	24546	C4-1/8-T0-3831-F
A4A2R23	0757-0279	0		RESISTOR 3.16K 1% .125W F TC=0+-100	24546	C4-1/8-T0-3161-F
A4A2R24*	0757-0439	4	10	RESISTOR 6.81K 1% .125W F TC=0+-100	24546	C4-1/8-T0-6811-F
A4A2R25	0757-0279	0		RESISTOR 3.16K 1% .125W F TC=0+-100	24546	C4-1/8-T0-3161-F
A4A2R26	0698-3438	3		RESISTOR 147 1% .125W F TC=0+-100	24546	C4-1/8-T0-147R-F
A4A2R27	0698-3136	8		RESISTOR 17.8K 1% .125W F TC=0+-100	24546	C4-1/8-T0-1782-F
A4A2R28	0698-3136	8		RESISTOR 17.8K 1% .125W F TC=0+-100	24546	C4-1/8-T0-1782-F
A4A2R29	0698-3444	1		RESISTOR 316 1% .125W F TC=0+-100	24546	C4-1/8-T0-316R-F
A4A2R30	0757-0439	4		RESISTOR 6.81K 1% .125W F TC=0+-100	24546	C4-1/8-T0-6811-F
A4A2R31	0757-0279	0		RESISTOR 3.16K 1% .125W F TC=0+-100	24546	C4-1/8-T0-3161-F
A4A2R32	0757-0279	0		RESISTOR 3.16K 1% .125W F TC=0+-100	24546	C4-1/8-T0-3161-F
A4A2R33				NOT ASSIGNED		
A4A2R34	0757-0439	4		RESISTOR 6.81K 1% .125W F TC=0+-100	24546	C4-1/8-T0-6811-F
A4A2R35	0757-1094	9	1	RESISTOR 1.47K 1% .125W F TC=0+-100	24546	C4-1/8-T0-1471-F
A4A2R36*	0698-3438	3	2	RESISTOR 147 1% .125W F TC=0+-100	24546	C4-1/8-T0-147R-F
A4A2R37	0757-0279	0		RESISTOR 3.16K 1% .125W F TC=0+-100	24546	C4-1/8-T0-3161-F
A4A2R38	0698-3136	8		RESISTOR 17.8K 1% .125W F TC=0+-100	24546	C4-1/8-T0-1782-F
A4A2R39	0698-3136	8		RESISTOR 17.8K 1% .125W F TC=0+-100	24546	C4-1/8-T0-1782-F
A4A2R40	0757-0439	4		RESISTOR 6.81K 1% .125W F TC=0+-100	24546	C4-1/8-T0-6811-F
A4A2R41	0698-3444	1		RESISTOR 316 1% .125W F TC=0+-100	24546	C4-1/8-T0-316R-F
A4A2R42	0757-0279	0		RESISTOR 3.16K 1% .125W F TC=0+-100	24546	C4-1/8-T0-3161-F
A4A2R43	0757-0439	4		RESISTOR 6.81K 1% .125W F TC=0+-100	24546	C4-1/8-T0-6811-F
A4A2R44	0698-3444	1		RESISTOR 316 1% .125W F TC=0+-100	24546	C4-1/8-T0-316R-F
A4A2R45	0757-0280	3		RESISTOR 1K 1% .125W F TC=0+-100	24546	C4-1/8-T0-1001-F
A4A2R46	0757-0439	4		RESISTOR 6.81K 1% .125W F TC=0+-100	24546	C4-1/8-T0-6811-F
A4A2R47	0757-0346	2		RESISTOR 10 1% .125W F TC=0+-100	24546	C4-1/8-T0-10R0-F
A4A2R48	0757-0346	2		RESISTOR 10 1% .125W F TC=0+-100	24546	C4-1/8-T0-10R0-F
A4A2R49	0757-0346	2		RESISTOR 10 1% .125W F TC=0+-100	24546	C4-1/8-T0-10R0-F
A4A2R50	0757-0442	9	14	RESISTOR 10K 1% .125W F TC=0+-100	24546	C4-1/8-T0-1002-F
A4A2R51-A4A2R55				NOT ASSIGNED		
A4A2R56	0757-0438	3	1	RESISTOR 5.11K 1% .125W F TC=0+-100	24546	C4-1/8-T0-5111-F
A4A2R57	0757-0458	7	2	RESISTOR 51.1K 1% .125W F TC=0+-100	24546	C4-1/8-T0-5112-F
A4A2R58	0757-0442	9		RESISTOR 10K 1% .125W F TC=0+-100	24546	C4-1/8-T0-1002-F
A4A2R59	0757-0279	0		RESISTOR 3.16K 1% .125W F TC=0+-100	24546	C4-1/8-T0-3161-F
A4A2R60	0757-0442	9		RESISTOR 10K 1% .125W F TC=0+-100	24546	C4-1/8-T0-1002-F
A4A2R61	2100-1972	3	1	RESISTOR-TRMR 20K 10% WW SIDE-ADJ 20-TRN	02660	3810P-203
A4A2R62*	0757-0199	3	1	RESISTOR 21.5K 1% .125W F TC=0+-100	24546	C4-1/8-T0-2152-F
A4A2R63	0757-0442	9		RESISTOR 10K 1% .125W F TC=0+-100	24546	C4-1/8-T0-1002-F

*Indicates factory selected value

TABLE 1. A4A2, REPLACEABLE PARTS (4 OF 4)

Reference Designation	HP Part Number	C D	Qty	Description	Mfr Code	Mfr Part Number
A4A2R64	0757-0394	0	2	RESISTOR 51.1 1% .125W F TC=0+-100	24546	C4-1/8-T0-51R1-F
A4A2R65	0757-0280	3		RESISTOR 1K 1% .125W F TC=0+-100	24546	C4-1/8-T0-1001-F
A4A2R66	0757-0442	9		RESISTOR 10K 1% .125W F TC=0+-100	24546	C4-1/8-T0-1002-F
A4A2R67	0757-0416	7	3	RESISTOR 511 1% .125W F TC=0+-100	24546	C4-1/8-T0-511R-F
A4A2R68				NOT ASSIGNED		
A4A2R69	0698-3437	2	1	RESISTOR 133 1% .125W F TC=0+-100	24546	C4-1/8-T0-133R-F
A4A2R70	0757-0280	3		RESISTOR 1K 1% .125W F TC=0+-100	24546	C4-1/8-T0-1001-F
A4A2R71	0698-3446	3	1	RESISTOR 383 1% .125W F TC=0+-100	24546	C4-1/8-T0-383R-F
A4A2R72	0757-0442	9		RESISTOR 10K 1% .125W F TC=0+-100	24546	C4-1/8-T0-1002-F
A4A2R73	0757-0401	0	4	RESISTOR 100 1% .125W F TC=0+-100	24546	C4-1/8-T0-101-F
A4A2R74	0757-0401	0		RESISTOR 100 1% .125W F TC=0+-100	24546	C4-1/8-T0-101-F
A4A2R75	0757-0416	7		RESISTOR 511 1% .125W F TC=0+-100	24546	C4-1/8-T0-511R-F
A4A2R76	0757-0416	7		RESISTOR 511 1% .125W F TC=0+-100	24546	C4-1/8-T0-511R-F
A4A2R77	0757-0442	9		RESISTOR 10K 1% .125W F TC=0+-100	24546	C4-1/8-T0-1002-F
A4A2R78	0757-0444	1	1	RESISTOR 12.1K 1% .125W F TC=0+-100	24546	C4-1/8-T0-1212-F
A4A2R79	2100-3103	6	1	RESISTOR-TRMR 10K 10% C SIDE-ADJ 17-TRN	02111	43P103
A4A2R80	0757-0440	7	1	RESISTOR 7.5K 1% .125W F TC=0+-100	24546	C4-1/8-T0-7501-F
A4A2R81	0757-0279	0		RESISTOR 3.16K 1% .125W F TC=0+-100	24546	C4-1/8-T0-3161-F
A4A2R82	0698-3442	9	1	RESISTOR 237 1% .125W F TC=0+-100	24546	C4-1/8-T0-237R-F
A4A2R83	0757-0401	0		RESISTOR 100 1% .125W F TC=0+-100	24546	C4-1/8-T0-101-F
A4A2R84	0757-0439	4		RESISTOR 6.81K 1% .125W F TC=0+-100	24546	C4-1/8-T0-6811-F
A4A2R85	0757-0346	2		RESISTOR 10 1% .125W F TC=0+-100	24546	C4-1/8-T0-10R0-F
A4A2R86*	0698-3154	0	2	RESISTOR 4.22K 1% .125W F TC=0+-100	24546	C4-1/8-T0-4221-F
A4A2R87	0698-3152	8	1	RESISTOR 3.48K 1% .125W F TC=0+-100	24546	C4-1/8-T0-3481-F
A4A2R88*	0698-3158	4	1	RESISTOR 23.7K 1% .125W F TC=0+-100	24546	C4-1/8-T0-2372-F
A4A2R89*	0698-3457	6	1	RESISTOR 316K 1% .125W F TC=0+-100	28480	0698-3457
A4A2R90	0757-0458	7		RESISTOR 51.1K 1% .125W F TC=0+-100	24546	C4-1/8-T0-5112-F
A4A2R91	2100-2852	0	1	RESISTOR-TRMR 1K 10% WW SIDE-ADJ 20-TRN	02660	3810P-102
A4A2R92	0698-3154	0		RESISTOR 4.22K 1% .125W F TC=0+-100	24546	C4-1/8-T0-4221-F
A4A2R93	0757-0280	3		RESISTOR 1K 1% .125W F TC=0+-100	24546	C4-1/8-T0-1001-F
A4A2R94	0683-0275	9	1	RESISTOR 2.7 5% .25W FC TC=-400/+500	01121	CB2705
A4A2R95	0698-3153	9		RESISTOR 3.83K 1% .125W F TC=0+-100	24546	C4-1/8-T0-3831-F
A4A2R96*	0698-3161	9	1	RESISTOR 30.3K 1% .125W F TC=0+-100	24546	C4-1/8-T0-3832-F
A4A2R97*	0698-8825	2	1	RESISTOR 681K 1% .125W F TC=0+-100	28480	0698-8825
A4A2R98	0698-3153	9		RESISTOR 3.83K 1% .125W F TC=0+-100	24546	C4-1/8-T0-3831-F
A4A2R99*	0757-0461	2	1	RESISTOR 68.1K 1% .125W F TC=0+-100	24546	C4-1/8-T0-6812-F
A4A2R100	0757-0442	9		RESISTOR 10K 1% .125W F TC=0+-100	24546	C4-1/8-T0-1002-F
A4A2R101	0757-0280	3		RESISTOR 1K 1% .125W F TC=0+-100	24546	C4-1/8-T0-1001-F
A4A2R102	0757-0442	9		RESISTOR 10K 1% .125W F TC=0+-100	24546	C4-1/8-T0-1002-F
A4A2R103	0757-0465	6	1	RESISTOR 100K 1% .125W F TC=0+-100	24546	C4-1/8-T0-1003-F
A4A2R104	0757-0442	9		RESISTOR 10K 1% .125W F TC=0+-100	24546	C4-1/8-T0-1002-F
A4A2R105	0757-0279	0		RESISTOR 3.16K 1% .125W F TC=0+-100	24546	C4-1/8-T0-3161-F
A4A2R106	0757-0394	0		RESISTOR 51.1 1% .125W F TC=0+-100	24546	C4-1/8-T0-51R1-F
A4A2R107	0757-0442	9		RESISTOR 10K 1% .125W F TC=0+-100	24546	C4-1/8-T0-1002-F
A4A2R108	0757-0442	9		RESISTOR 10K 1% .125W F TC=0+-100	24546	C4-1/8-T0-1002-F
A4A2R109	0757-0442	9		RESISTOR 10K 1% .125W F TC=0+-100	24546	C4-1/8-T0-1002-F
A4A2R110	0757-0442	9		RESISTOR 10K 1% .125W F TC=0+-100	24546	C4-1/8-T0-1002-F
A4A2R111	0757-0123	3	1	RESISTOR 34.8K 1% .125W F TC=0+-100	28480	0757-0123
A4A2R112	0757-0395	1	1	RESISTOR 56.2 1% .125W F TC=0+-100	24546	C4-1/8-T0-56R2-F
A4A2R113	0757-0401	0		RESISTOR 100 1% .125W F TC=0+-100	24546	C4-1/8-T0-101-F
A4A2R114	0757-0346	2		RESISTOR 10 1% .125W F TC=0+-100	24546	C4-1/8-T0-10R0-F
A4A2R115	0757-0279	0		RESISTOR 3.16K 1% .125W F TC=0+-100	24546	C4-1/8-T0-3161-F
A4A2TP1	1251-0600	0	8	CONNECTOR-SGL CONT PIN 1.14-MM-BSC-SZ SQ	28480	1251-0600
A4A2TP2	1251-0600	0		CONNECTOR-SGL CONT PIN 1.14-MM-BSC-SZ SQ	28480	1251-0600
A4A2TP3	1251-0600	0		CONNECTOR-SGL CONT PIN 1.14-MM-BSC-SZ SQ	28480	1251-0600
A4A2TP4	1251-0600	0		CONNECTOR-SGL CONT PIN 1.14-MM-BSC-SZ SQ	28480	1251-0600
A4A2TP5	1251-0600	0		CONNECTOR-SGL CONT PIN 1.14-MM-BSC-SZ SQ	28480	1251-0600
A4A2TP6	1251-0600	0		CONNECTOR-SGL CONT PIN 1.14-MM-BSC-SZ SQ	28480	1251-0600
A4A2TP7	1251-0600	0		CONNECTOR-SGL CONT PIN 1.14-MM-BSC-SZ SQ	28480	1251-0600
A4A2TP8	1251-0600	0		CONNECTOR-SGL CONT PIN 1.14-MM-BSC-SZ SQ	28480	1251-0600
A4A2U1	5081-8117	3	1	SCREEN 1826-0692	28480	5081-8117
A4A2VR1	1902-0126	6	2	DIODE-ZNR 2.61V 5% DO-7 PD=.4W TC=-.072%	28480	1902-0126
A4A2VR2	1902-0041	4	1	DIODE-ZNR 5.11V 5% DO-35 PD=.4W	28480	1902-0041
A4A2VR3	1902-0126	6		DIODE-ZNR 2.61V 5% DO-7 PD=.4W TC=-.072%	28480	1902-0126
				MISCELLANEOUS PARTS		
	1205-0011	0	1	HEAT SINK	28480	1205-0011
	05662-20040	4	1	COVER LOG AMP DET	28480	05662-20040
	86701-40001	9	1	EXTRACTOR-PC	28480	86701-40001

*Indicates factory selected value

A4A1 VIDEO PROCESSOR
85662-60122

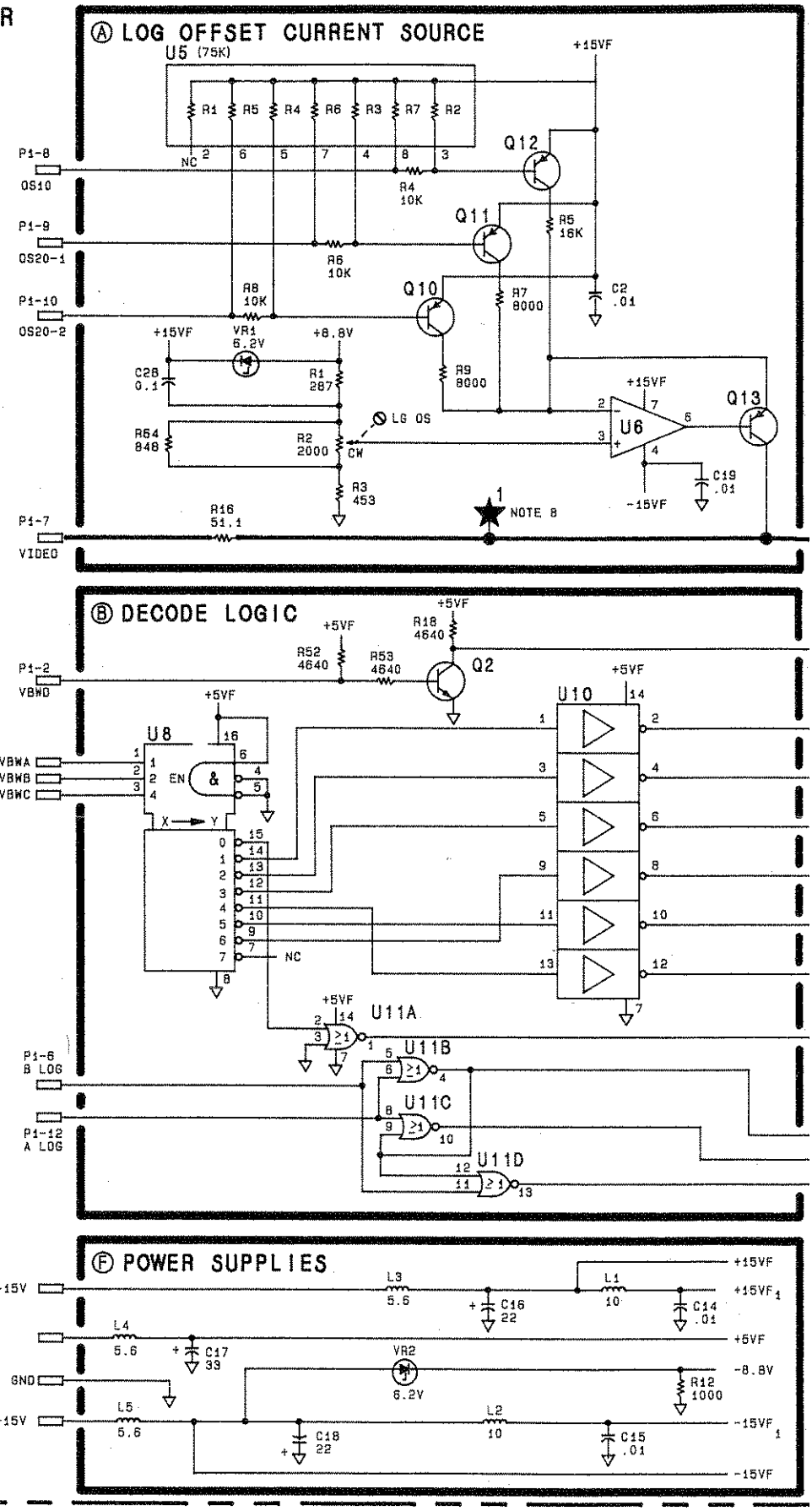

P1

PIN	SIGNAL	TO/FROM	FUNCTION BLOCK
1	GND		F
7	VIDEO	A4A2P1-1	A
2	VBWD	A4A9P1-32	B
8	OS10	A4A9P1-14	A
3	VBWC	A4A9P1-33	B
9	OS20-1	A4A9P1-15	A
4	VBWB	A4A9P1-34	B
10	OS20-2	A4A9P1-16	A
5	VBWA	A4A9P1-35	B
11	GND		F
6	B LOG	A4A9P1-20	B
12	A LOG	A4A9P1-19	B

P1

PIN	SIGNAL	TO/FROM	FUNCTION BLOCK
1	REC ZERO	A4A9P1-2	E
7	GND		F
2	REC CAL	A4A9P1-1	E
8	GND		F
3	GND		F
9	GND		F
4	+5V		F
10	GND		F
5	-15V		F
11	-15V		F
6	+15V		F
12	+15V		F

SERIAL PREFIX: 2403A

LOG AMPLIFIER – FILTER

A4A3

IF VIDEO MOTHERBOARD

A4A10

A4A2 LOG AMPLIFIER – DETECTOR

21.4MHz +5dBm ±2dB → 2 → A4XA3P2 → A4XA2P2 → 8

A LOG AMPLIFIER STAGES

STAGE 6 | STAGE 7 | STAGE 8 | STAGE 9

+12VF

Q21,Q22 | Q19,Q20 | Q17,Q18 | Q15,Q16 | Q14

LG20

C PIN DIODE ATTENUATOR

Q7

CR26, 27

CR28, 29

Q5

ATTEN

E DETECTOR

Q4

Q2

Q1

Q3

IF CONTROL

A4A9

LG20 → 18 → A4XA2P1 → A4XA2P2 → 7

LOG/LIN → 13 → A4XA2P1 → 9

B CONTROL

LG20 SWITCH

LG20

Q10

-12VF

LOG/LIN SWITCH

Q8

Q9

-12VF

-12VF

LOG/LIN

D TEMPERATURE DEPENDENT REGULATORS

-12 VTV REGULATOR

6 -12V ±2V

9 -12VTV

U1A

Q11

-15VF

PIN DIODE ATTENUATOR REGULATOR

U1B

3 -7V ±4V

-15VF

+15VF

-15VF

F COUNTER OUTPUT BUFFER/ LIMITER

Q6

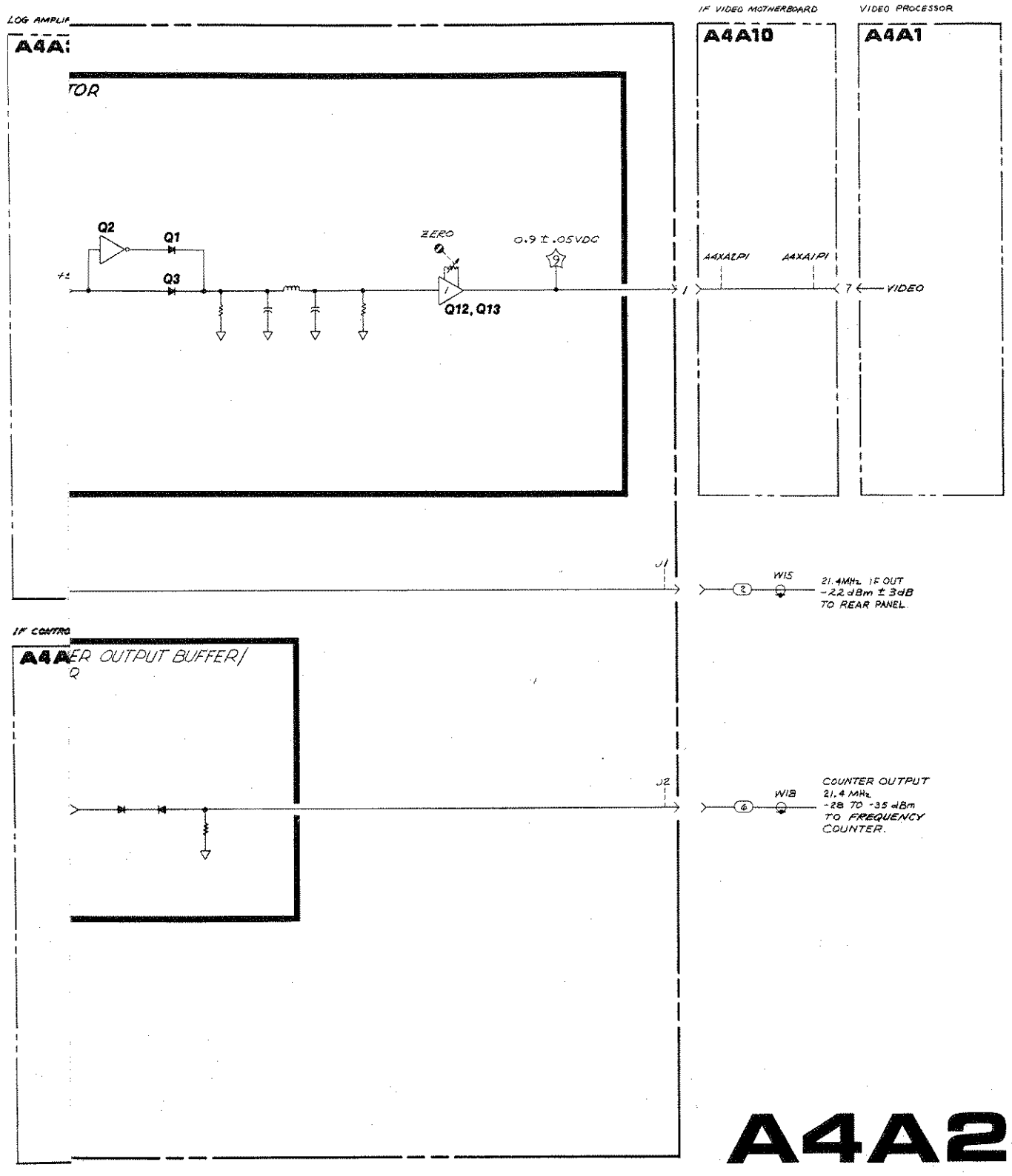

FIGURE 1. A4A2 LOG AMPLIFIER-DETECTOR, BLOCK DIAGRAM

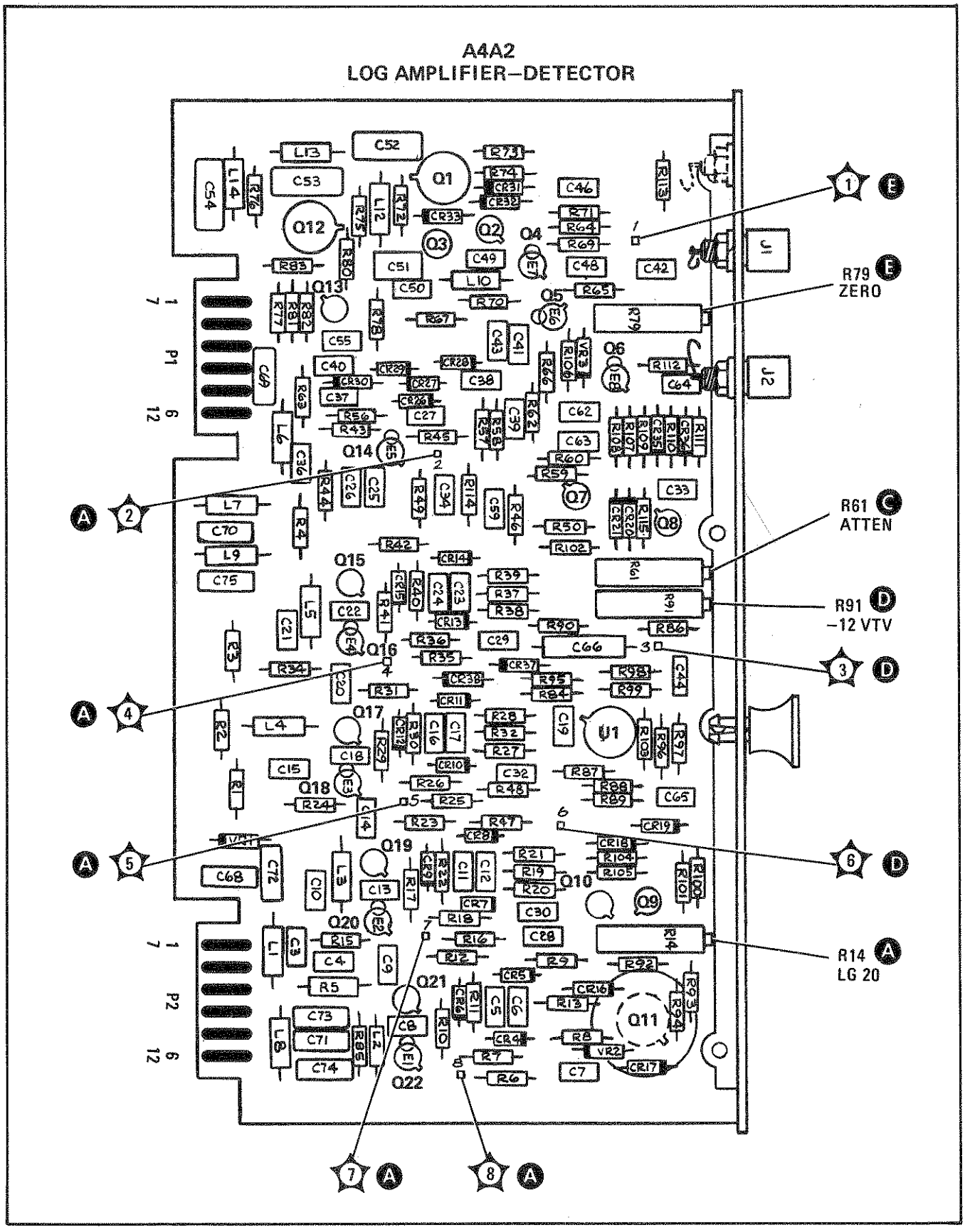

FIGURE 2. A4A2 LOG AMPLIFIER-DETECTOR, COMPONENT LOCATIONS

A4A2 LOG AMPLIFIER - DETECTOR
85662-60132

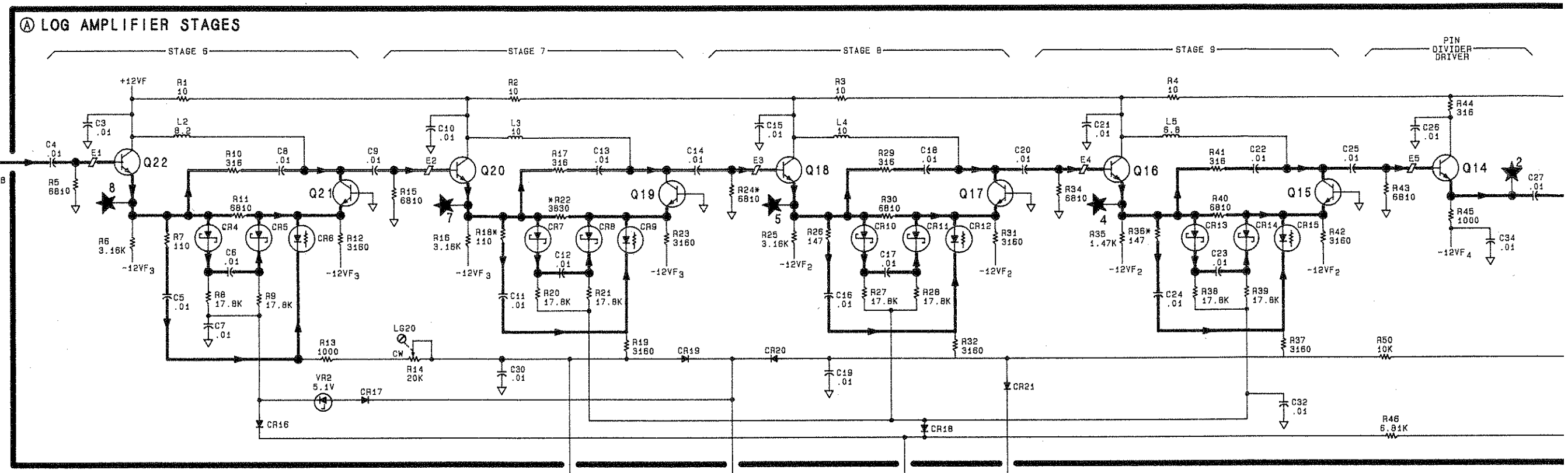

P1

PIN	SIGNAL	TO/FROM	FUNCTION BLOCK
1	VIDEO	A4A1 P1-7	E
7	GND		G
2	GND		G
8	GND		G
3	GND		G
9	LOG/LIN	A4A9 P1-13	B
4	GND		G
10	AGC	A4A3 P1-11	B
5	GND		G
11	GND		G
6	GND		G
12	-12VTV	A4A3 P1-12	D

P2

PIN	SIGNAL	TO/FROM	FUNCTION BLOCK
1	GND		G
7	LG20	A4A9 P1-18	B
2	GND		G
8	21.4 MHz	A4A3 P2-2	A
3	GND		G
9	GND		G
4	GND		G
10	GND		G
5	-15V		D G
11	-15V		D G
6	+15V		G
12	+15V		G

SERIAL PREFIX: 2403A

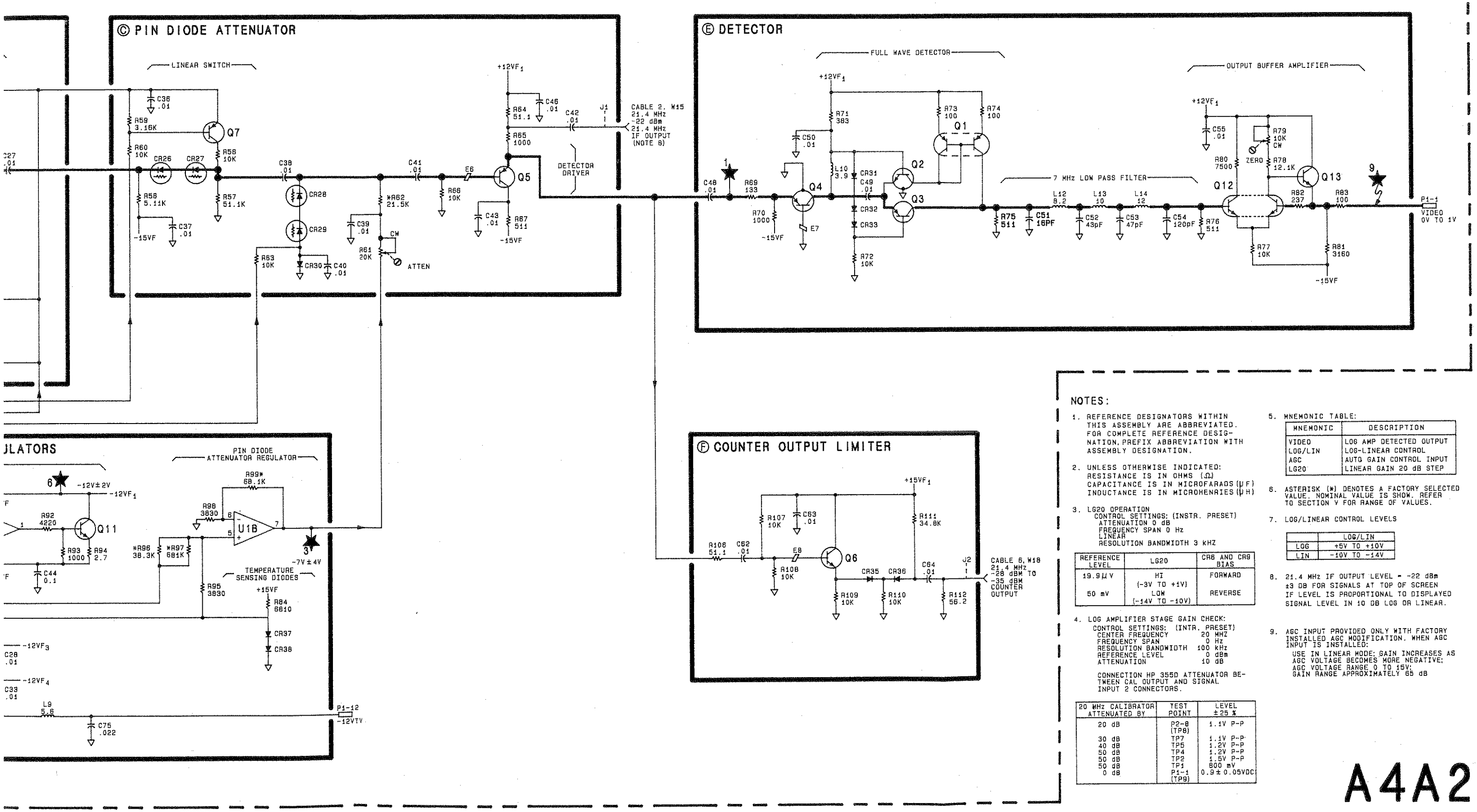

NOTES:

1. REFERENCE DESIGNATORS WITHIN THIS ASSEMBLY ARE ABBREVIATED. FOR COMPLETE REFERENCE DESIGNATION, PREFIX ABBREVIATION WITH ASSEMBLY DESIGNATION.

2. UNLESS OTHERWISE INDICATED:
   RESISTANCE IS IN OHMS (Ω)
   CAPACITANCE IS IN MICROFARADS (μF)
   INDUCTANCE IS IN MICROHENRIES (μH)

3. LG20 OPERATION
   CONTROL SETTINGS: (INSTR. PRESET)
   ATTENUATION 0 dB
   FREQUENCY SPAN 0 Hz
   LINEAR
   RESOLUTION BANDWIDTH 3 kHZ

REFERENCE LEVEL	LG20	CR6 AND CR9 BIAS
19.9μV	HI (-3V TO +1V)	FORWARD
50 mV	LOW (-14V TO -10V)	REVERSE

4. LOG AMPLIFIER STAGE GAIN CHECK:
   CONTROL SETTINGS: (INTR. PRESET)
   CENTER FREQUENCY 20 MHZ
   FREQUENCY SPAN 0 Hz
   RESOLUTION BANDWIDTH 100 kHz
   REFERENCE LEVEL 0 dBm
   ATTENUATION 10 dB

   CONNECTION HP 355D ATTENUATOR BETWEEN CAL OUTPUT AND SIGNAL INPUT 2 CONNECTORS.

20 MHz CALIBRATOR ATTENUATED BY	TEST POINT	LEVEL ±25 %
20 dB	P2-8 (TP8)	1.1V P-P
30 dB	TP7	1.1V P-P
40 dB	TP6	1.2V P-P
50 dB	TP4	1.2V P-P
50 dB	TP2	1.5V P-P
50 dB	TP1	800 mV
0 dB	P1-1 (TP9)	0.9±0.05VDC

5. MNEMONIC TABLE:

MNEMONIC	DESCRIPTION
VIDEO	LOG AMP DETECTED OUTPUT
LOG/LIN	LOG-LINEAR CONTROL
AGC	AUTO GAIN CONTROL INPUT
LG20	LINEAR GAIN 20 dB STEP

6. ASTERISK (*) DENOTES A FACTORY SELECTED VALUE. NOMINAL VALUE IS SHOW. REFER TO SECTION V FOR RANGE OF VALUES.

7. LOG/LINEAR CONTROL LEVELS

	LOG/LIN
LOG	+5V TO +10V
LIN	-10V TO -14V

8. 21.4 MHz IF OUTPUT LEVEL = -22 dBm ±3 DB FOR SIGNALS AT TOP OF SCREEN IF LEVEL IS PROPORTIONAL TO DISPLAYED SIGNAL LEVEL IN 10 DB LOG OR LINEAR.

9. AGC INPUT PROVIDED ONLY WITH FACTORY INSTALLED AGC MODIFICATION. WHEN AGC INPUT IS INSTALLED:
   USE IN LINEAR MODE; GAIN INCREASES AS AGC VOLTAGE BECOMES MORE NEGATIVE;
   AGC VOLTAGE RANGE 0 TO 15V;
   GAIN RANGE APPROXIMATELY 65 dB

A4A2

FIGURE 3. A4A2 LOG AMPLIFIER-DETECTOR, SCHEMATIC DIAGRAM

A4A3 LOG AMPLIFIER-FILTER, CIRCUIT DESCRIPTION

A4A3 Log Amplifier-Filter, with A4A2 Log Amplifier-Detector, provides the ability to display signals in either a linear or log mode. In log mode the calibrated display range is 90 dB. A4A3 contains the first five of nine log stages, and A4A2 contains the last four. A4A3 also contains circuitry for using one of the log stages as a switchable 10 dB gain step. This is used only in linear mode.

After being processed by the first five log amplifier stages, the 21.4 MHz IF signal is applied to the log amplifier filter, the bandwidth of which is either narrow (approximately 1 MHz) or wide (>20 MHz). The filter is in narrow mode for resolution bandwidths of ≤30 kHz to reduce noise generated in the log amplifier stages.

Control lines from A4A9 IF Control drive circuits of A4A3 which control the log amplifier filter, log/linear switching, and 10 dB linear gain step.

Log Amplifier Stages (A)

In LOG mode, the five log amplifier stages in A4A3 and the four log amplifier stages in A4A2 limit their gain in sequence with increasing signal level to provide 90 dB of log display range. In LINEAR mode, signal-level-dependent components are switched out of the signal path, and a linear display is provided.

LOG Mode. A simplified schematic of a log amplifier stage is shown in Figure 1. In LOG mode, the LOG/LIN control line is high (about +7V), Q16 is on, forward biasing log diodes CR25, CR26, and all other log diodes in this assembly. CR25 and CR26 are Schottky diodes with a forward bias voltage of approximately +0.4V. Q11 is an emitter follower used as a voltage source which drives Q12 through the resistance of CR25 and CR26. Q12 forms a common-base amplifier tuned to approximately 21.4 MHz. The gain of the amplifier is set by the ratio of R48 to the total resistance R_T between the emitters of Q11 and Q12 (primarily the resistance of CR25 and CR26). The formula for computing gain is:

$$G = 1 + \frac{316}{R_T}$$

R_T is at a minimum (approximately 150Ω) for small signals. The small-signal gain of the stage (about 10 dB) is set by the dc bias current through the log diodes. As the signal level at the Q11 emitter increases, signal current cancels bias current in the log diodes, increasing R_T. The gain of the stage for large signals is reduced to nearly unity (0 dB) because R_T becomes very large. Signal current flow through R49 keeps the stage gain slightly above unity to compensate for the input loading of the following stage.

Bias Supplies

The −12 VTV is supplied to A4A3 from A4A2. This voltage determines log diode bias current and becomes more negative as temperature increases to compensate for the increased resistance of the log diodes. The same supply is used to compensate the log diodes of the four log stages in A4A2.

LINEAR Mode. (See Figure 1) In LINEAR Mode, log diodes CR15 and CR16 are zero biased, and the limiting action is removed from the stage. R_T is large, and stage gain is nearly unity. Signal flow is through emitter follower Q11 and R48 to Q13.

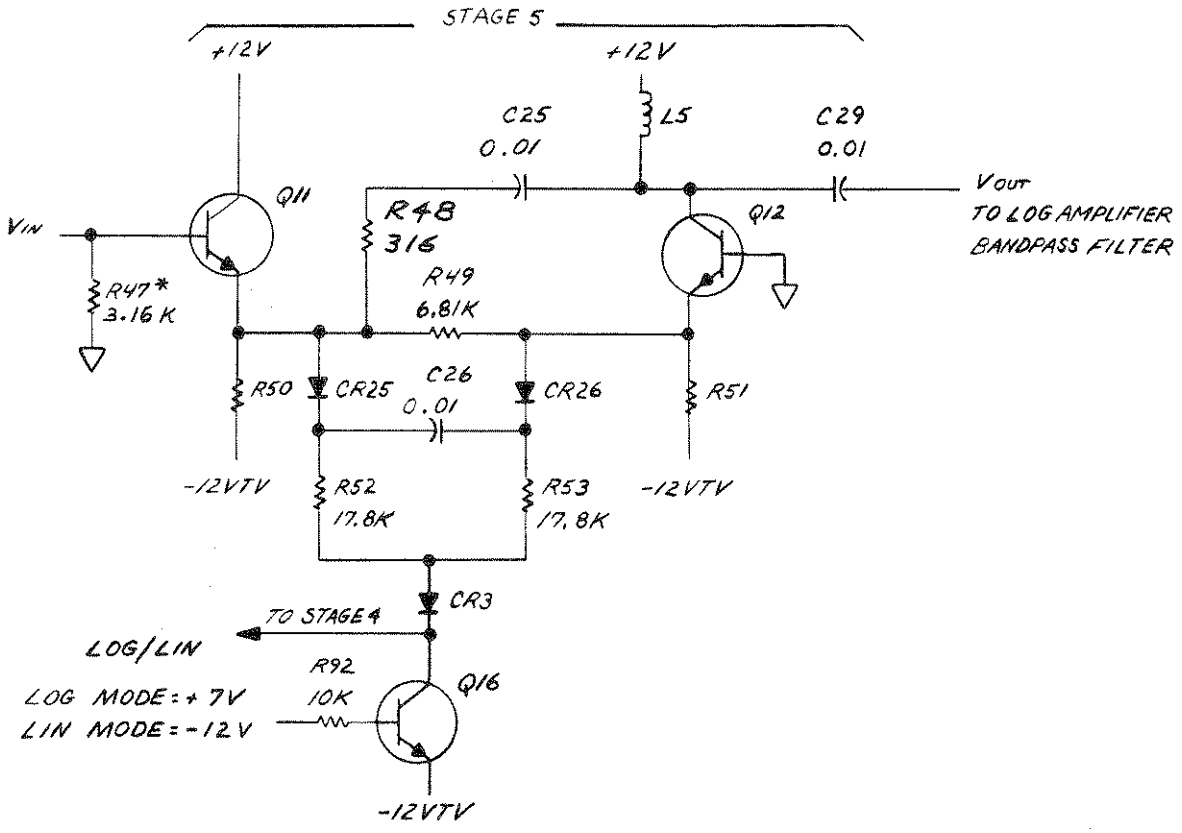

FIGURE 1. LOG AMPLIFIER STAGE, SIMPLIFIED SCHEMATIC

Log Stages. All nine of the log amplifier stages in A4A2 and A4A3 are similar in operation, although there are variations in certain stages. While all stages except the first three contain two log diodes each, the first two stages contain six diodes each, and the third contains four diodes. More diodes are used in Stages 1 through 3 because these stages have their logging action at higher signal levels than the other log stages. Log diodes of Stages 1 and 2 are biased so that the logging action occurs at signal levels of approximately 0 dBm to + 10 dBm, whereas the remaining stages log at lower signal levels. To provide proper log fidelity (log amplifier output versus input), attenuation is required between the output of a higher level log stage and the input of a lower level log stage. Resistive divider R20, R29, and R30 attenuates the output of Stage 2, and a similar attenuator is used between Stages 3 and 4. Resistors in series with the log diodes of Stage 1 through 3 are factory-selected to compensate for variations in log diode resistance. Correct stage gain is required for proper log fidelity. Refer to the A4A3 schematic note for the method of checking the gain of Stages 1 through 5 in log mode.

10 dB Linear Gain Step. Stage 5 is used as a switchable 10 dB gain step in linear mode at low reference levels. When control line LG1Ø is low (−12V typical), Q17 is off and CR27 is reverse biased, preventing CR27 from being a signal path. When control line LG1Ø is high (more positive than −3V), the Q17 collector is saturated to the −12 VTV supply, and PIN diode CR27 is forward biased. LG1Ø adjustment R83 sets the bias current (and thus resistance) of PIN diode CR27. The resistance of CR27 plus R54 is set so that the gain of Stage 5 will increase by 10 dB when CR27 is turned on (refer to the foregoing gain formula). Since PIN diode resistance is unaffected by signal level, Stage 5 operates as a non-limiting amplifier. This 10 dB gain step, in conjunction with a similar 20 dB gain step in A4A2, is used for the last 30 dB of step gain (lowest 30 dB of reference level) in linear mode. See the schematic note for the reference levels at which this gain step is checked.

Bandpass Filters (C)

In narrow resolution bandwidths, noise generated in the log amplifiers is reduced by the Bandpass Filter following Log Amplifier Stage 5. The bandwidth of this filter is switchable between wide (>20 MHz) and narrow (about 1 MHz). In resolution bandwidths of 30 kHz or less, the filter bandwidth is narrow. This reduces the log amplifier noise contribution 90 dB down from the reference level. In resolution bandwidths of 100 kHz and greater, the bandwidth of the filter is wide enough so as not to affect the shape of the wide resolution bandwidth filters (see Figure 2).

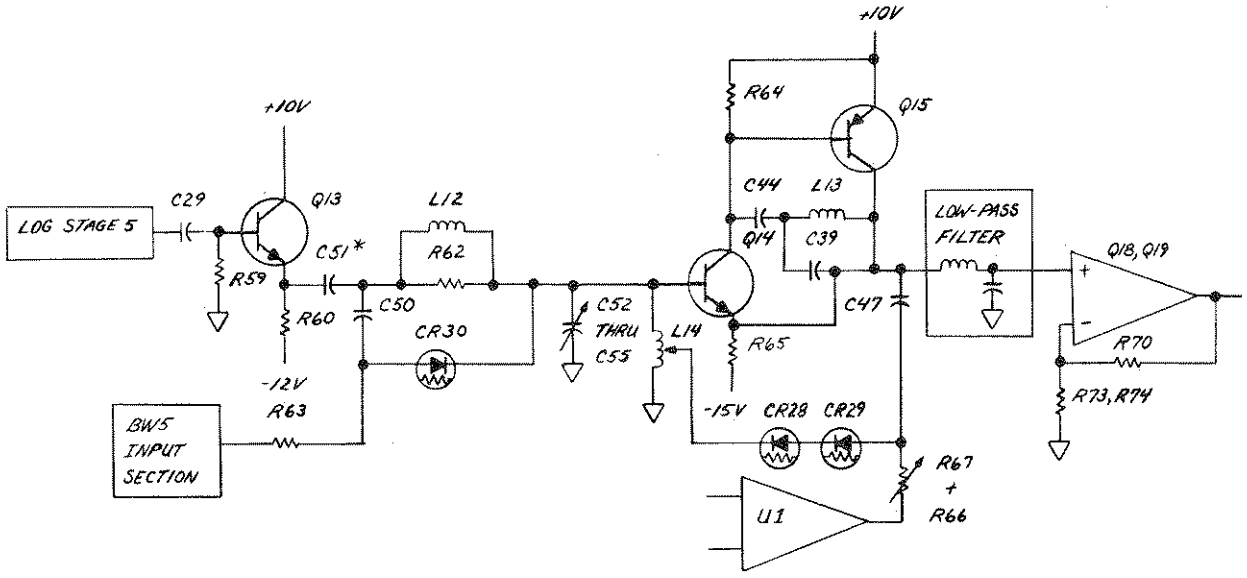

FIGURE 2. BANDPASS FILTER, SIMPLIFIED SCHEMATIC

Bandpass Filter Switching. Emitter follower Q13 buffers the output of Log Amplifier Stage 5 and drives the Bandpass Filter. The filter bandwidth is determined by the resistance through which the LC tank network (L14 and C52 through C55) is driven. In resolution bandwidths of 3 MHz to 100 kHz, bandwidth control line BW5 is high (+15V) and CR30 is forward biased through R63, resulting in a low filter drive impedance and wide bandwidth. When the analyzer resolution bandwidth is less than 100 kHz, BW5 is low (about −0.6V). CR30 is reverse biased, and the LC shunt network is driven through R62, setting the filter bandwidth at about 1 MHz. The signal is buffered by Q14 and Q15. The output of buffer amplifier Q14/Q15 provides a low impedance drive for the Low-Pass Filter. The Buffer Amplifier Q14/Q15 also drives the center tap of L14 through the resistance of PIN diodes CR28 and CR29. This feedback results in an apparent negative input resistance in parallel with L14. The negative input resistance compensates for the parallel resistance present in the tank circuit because of the Q of L14. The gain of the filter in narrow mode is set equal to that in wide mode by setting the resistance CR28 and CR29. The resistance of CR28 and CR29 is set by adjusting the diode bias current with FILTER AMPTD adjustment R67. L13 and C39 are frequency compensation for Q14 and Q15.

BW5 Input Section. TP7 and TP8 provide a means to adjust the bandpass filter for equal gain in wide and narrow modes. This can be done without changing IF bandwidth, which might in itself introduce an amplitude change. With the analyzer in narrow resolution bandwidths (30 kHz through 10 Hz), BW5 is approximately −0.6V, which reverse biases CR30. This places the Bandpass Filter in narrow mode. The center frequency of the bandpass filter can be adjusted with CTR adjustment C55. To place the Bandpass Filter in wide mode, TP7 and TP8 are shorted together with a jumper wire. This forward biases CR30 through R89 and R63. Filter amplitude can then be set with FILTER AMPTD adjustment R67 so that amplitudes are equal in wide (test points jumpered) and narrow (jumper removed) modes.

Filter Temperature Compensation (D)

The Filter Temperature Compensation circuit stabilizes the gain of the bandpass filter with temperature changes.

Op Amp U1 and associated circuitry provide temperature dependent bias for CR28 and CR29 to compensate for temperature-dependent changes in the Q of L14 and the resistance of CR28 and CR29. As temperature increases, diode bias current increases as the voltage at U1 pin 6 increases. CR5 and CR6 operate as temperature-sensing elements to control the voltage at U1 pin 6.

Low-Pass Filter (E)

The Low-Pass Filter consists of L15, L16, C56 through C59, R67, and R68. It has a bandwidth of about 30 MHz, which removes harmonics of the 21.4 HMz IF signal to reduce log fidelity variations between wide and narrow settings of the Bandpass Filter. The Low-Pass Filter has a loss of 6 dB, which is compensated for by buffer amplifier Q18/Q19, which has a gain of 6 dB. R74* is factory-selected to adjust the gain of Q18/Q19 for proper log fidelity.

A4A3 LOG AMPLIFIER-FILTER, TROUBLESHOOTING

If the amplitude of the displayed signals is approximately 10 dB low (i.e., CAL OUTPUT appears to be −20 dBm) in the log mode but correct in the linear display mode, then one of the log amplifier stages in the A4A3 Log Amplifier-Filter board or the A4A2 Log Amplifier-Detector board is defective. Connect a 10 dB step attenuator between the CAL OUTPUT and the spectrum analyzer input. Refer to the Log Amplifier Stage Gain Check note on the service sheets for the necessary front panel control settings. When forward biased in log mode, the Schottky diodes should have voltage drops of 200 – 400 mV.

The following procedure will determine if the Linear Gain Steps, LG1Ø and LG2Ø, are operating properly. The LG1Ø circuitry is located on the A4A3 Log Amplifier-Filter Board while the LG2Ø circuitry is located on the A4A2 Log Amplifier-Detector Board. Connect a 10 dB step attenuator set to 0 dB between the CAL OUTPUT and the spectrum analyzer input. Press Instrument Preset and key in the following settings:

CENTER FREQUENCY ..... equal to the CAL OUTPUT frequency
FREQUENCY SPAN ..... 10 kHz
RES BW ..... 3 kHz
ATTEN ..... 0 dB
SHIFT LOG SCALE ENTER dB/DIV (Turns off IF Step Gains)
REFERENCE LEVEL ..... −60 dBm
SCALE LIN

The peak of the displayed signal should be on the top graticule. Adjust the front panel AMPTD CAL control to place the peak of the signal one division below the top graticule. If the signal limits at the top of the display, one of the Linear Gain Steps is stuck in the on state.

Set the 10 dB step attenuator to 10 dB and key in REFERENCE LEVEL −70 dBm. The peak of the displayed signal should be one division below the top graticule. If signal limits at the top of the display, the LG2Ø circuitry is defective. A signal approximately 3 divisions high indicates that the LG1Ø circuitry is defective.

Set the 10 dB step attenuator to 20 dB and key in REFERENCE LEVEL −80 dBm. The peak of the displayed signal should be one division below the top graticule. The LG1Ø circuitry is defective if the signal limits at the top of the display. The LG2Ø circuitry is faulty if the displayed signal is approximately 3 divisions high.

The detector circuit on the A4A2 Log Amplifier-Detector board is most easily checked with dc voltages. These are derived using 0 Hz FREQUENCY SPAN and attenuating the CAL OUTPUT signal. The easiest point to check the Detector output without removing boards is A4A1TP1. Connect a DVM to this test point. The voltage at A4A1TP1 should be +1V for a signal displayed on the top graticule. The output will be 0.1V less for each division down from the top in either the linear or the 10 dB/DIV log modes when the detector is operating properly.

TABLE 1. A4A3, REPLACEABLE PARTS (1 OF 4)

Reference Designation	HP Part Number	C D	Qty	Description	Mfr Code	Mfr Part Number
A4A3	85662-60096	4	1	LOG AMPLIFIER (INCLUDES A4A2 AND A4A3)	28480	85662-60096
	85662-60097	5		RESTORED 85662-60096	28480	85662-60097
	85662-60089	9	1	BOARD ASSEMBLY, LOG AMPLIFIER	28480	85662-60089
A4A3C1	0160-2055	9	46	CAPACITOR-FXD .01UF +80-20% 100VDC CER	28480	0160-2055
A4A3C2	0160-2055	9		CAPACITOR-FXD .01UF +80-20% 100VDC CER	28480	0160-2055
A4A3C3	0160-2055	9		CAPACITOR-FXD .01UF +80-20% 100VDC CER	28480	0160-2055
A4A3C4	0160-2055	9		CAPACITOR-FXD .01UF +80-20% 100VDC CER	28480	0160-2055
A4A3C5	0160-2055	9		CAPACITOR-FXD .01UF +80-20% 100VDC CER	28480	0160-2055
A4A3C6	0160-2055	9		CAPACITOR-FXD .01UF +80-20% 100VDC CER	28480	0160-2055
A4A3C7	0160-2244	8	1	CAPACITOR-FXD 3PF +-.25PF 500VDC CER	28480	0160-2244
A4A3C8	0160-2055	9		CAPACITOR-FXD .01UF +80-20% 100VDC CER	28480	0160-2055
A4A3C9	0160-2236	8	2	CAPACITOR-FXD 1PF +-.25PF 500VDC CER	28480	0160-2236
A4A3C10	0160-2055	9		CAPACITOR-FXD .01UF +80-20% 100VDC CER	28480	0160-2055
A4A3C11	0160-2055	9		CAPACITOR-FXD .01UF +80-20% 100VDC CER	28480	0160-2055
A4A3C12	0160-2055	9		CAPACITOR-FXD .01UF +80-20% 100VDC CER	28480	0160-2055
A4A3C13	0160-2055	9		CAPACITOR-FXD .01UF +80-20% 100VDC CER	28480	0160-2055
A4A3C14	0160-2055	9		CAPACITOR-FXD .01UF +80-20% 100VDC CER	28480	0160-2055
A4A3C15	0160-2055	9		CAPACITOR-FXD .01UF +80-20% 100VDC CER	28480	0160-2055
A4A3C16	0160-2055	9		CAPACITOR-FXD .01UF +80-20% 100VDC CER	28480	0160-2055
A4A3C17	0160-2055	9		CAPACITOR-FXD .01UF +80-20% 100VDC CER	28480	0160-2055
A4A3C18	0160-2055	9		CAPACITOR-FXD .01UF +80-20% 100VDC CER	28480	0160-2055
A4A3C19	0160-2055	9		CAPACITOR-FXD .01UF +80-20% 100VDC CER	28480	0160-2055
A4A3C20	0160-2055	9		CAPACITOR-FXD .01UF +80-20% 100VDC CER	28480	0160-2055
A4A3C21				NOT ASSIGNED		
A4A3C22				NOT ASSIGNED		
A4A3C23	0160-2055	9		CAPACITOR-FXD .01UF +80-20% 100VDC CER	28480	0160-2055
A4A3C24	0160-2055	9		CAPACITOR-FXD .01UF +80-20% 100VDC CER	28480	0160-2055
A4A3C25	0160-2055	9		CAPACITOR-FXD .01UF +80-20% 100VDC CER	28480	0160-2055
A4A3C26	0160-2055	9		CAPACITOR-FXD .01UF +80-20% 100VDC CER	28480	0160-2055
A4A3C27	0160-2055	9		CAPACITOR-FXD .01UF +80-20% 100VDC CER	28480	0160-2055
A4A3C28	0160-2055	9		CAPACITOR-FXD .01UF +80-20% 100VDC CER	28480	0160-2055
A4A3C29	0160-2055	9		CAPACITOR-FXD .01UF +80-20% 100VDC CER	28480	0160-2055
A4A3C30				NOT ASSIGNED		
A4A3C31	0160-4297	5	6	CAPACITOR-FXD .022UF +80-20% 100VDC CER	56289	C023F101H223ZS22-CDH
A4A3C32	0160-4297	5		CAPACITOR-FXD .022UF +80-20% 100VDC CER	56289	C023F101H223ZS22-CDH
A4A3C33	0160-2055	9		CAPACITOR-FXD .01UF +80-20% 100VDC CER	28480	0160-2055
A4A3C34	0160-2055	9		CAPACITOR-FXD .01UF +80-20% 100VDC CER	28480	0160-2055
A4A3C35				NOT ASSIGNED		
A4A3C36				NOT ASSIGNED		
A4A3C37	0160-4297	5		CAPACITOR-FXD .022UF +80-20% 100VDC CER	56289	C023F101H223ZS22-CDH
A4A3C38	0160-2055	9		CAPACITOR-FXD .01UF +80-20% 100VDC CER	28480	0160-2055
A4A3C39	0160-2255	1	1	CAPACITOR-FXD 8.2PF +-.25PF 500VDC CER	28480	0160-2255
A4A3C40	0160-2055	9		CAPACITOR-FXD .01UF +80-20% 100VDC CER	28480	0160-2055
A4A3C41	0160-4297	5		CAPACITOR-FXD .022UF +80-20% 100VDC CER	56289	C023F101H223ZS22-CDH
A4A3C42	0160-2055	9		CAPACITOR-FXD .01UF +80-20% 100VDC CER	28480	0160-2055
A4A3C43	0160-2055	9		CAPACITOR-FXD .01UF +80-20% 100VDC CER	28480	0160-2055
A4A3C44	0160-2055	9		CAPACITOR-FXD .01UF +80-20% 100VDC CER	28480	0160-2055
A4A3C45	0160-2055	9		CAPACITOR-FXD .01UF +80-20% 100VDC CER	28480	0160-2055
A4A3C46	0160-2055	9		CAPACITOR-FXD .01UF +80-20% 100VDC CER	28480	0160-2055
A4A3C47	0160-2055	9		CAPACITOR-FXD .01UF +80-20% 100VDC CER	28480	0160-2055
A4A3C48	0160-2055	9		CAPACITOR-FXD .01UF +80-20% 100VDC CER	28480	0160-2055
A4A3C49	0160-2055	9		CAPACITOR-FXD .01UF +80-20% 100VDC CER	28480	0160-2055
A4A3C50	0160-2055	9		CAPACITOR-FXD .01UF +80-20% 100VDC CER	28480	0160-2055
A4A3C51*	0160-3536	3	1	CAPACITOR-FXD 620PF +-5% 100VDC MICA	28480	0160-3536
A4A3C52*	0160-2252	8	2	CAPACITOR-FXD 6.2PF +-.25PF 500VDC CER	28480	0160-2252
A4A3C53*	0160-0839	3	1	CAPACITOR-FXD 110PF +-1% 300VDC MICA	28480	0160-0839
A4A3C54	0160-0455	9	1	CAPACITOR-FXD 18PF +-2% 600VDC CER	28480	0160-0455
A4A3C55	0121-0493	3	1	CAPACITOR-V TRMR-AIR 1.7-11PF 175V	74970	187-0306-125
A4A3C56	0160-2251	7	1	CAPACITOR-FXD 5.6PF +-.25PF 500VDC CER	28480	0160-2251
A4A3C57	0160-2236	8		CAPACITOR-FXD 1PF +-.25PF 500VDC CER	28480	0160-2236
A4A3C58	0160-2262	0	1	CAPACITOR-FXD 16PF +-5% 500VDC CER 0+-30	28480	0160-2262
A4A3C59	0160-2252	8		CAPACITOR-FXD 6.2PF +-.25PF 500VDC CER	28480	0160-2252
A4A3C60				NOT ASSIGNED		
A4A3C61	0160-2055	9		CAPACITOR-FXD .01UF +80-20% 100VDC CER	28480	0160-2055
A4A3C62	0160-2055	9		CAPACITOR-FXD .01UF +80-20% 100VDC CER	28480	0160-2055
A4A3C63	0160-2055	9		CAPACITOR-FXD .01UF +80-20% 100VDC CER	28480	0160-2055
A4A3C64				NOT ASSIGNED		
A4A3C65	0160-2055	9		CAPACITOR-FXD .01UF +80-20% 100VDC CER	28480	0160-2055
A4A3C66	0160-4297	5		CAPACITOR-FXD .022UF +80-20% 100VDC CER	56289	C023F101H223ZS22-CDH
A4A3C67	0160-2055	9		CAPACITOR-FXD .01UF +80-20% 100VDC CER	28480	0160-2055
A4A3C68	0160-2055	9		CAPACITOR-FXD .01UF +80-20% 100VDC CER	28480	0160-2055
A4A3C69	0160-2055	9		CAPACITOR-FXD .01UF +80-20% 100VDC CER	28480	0160-2055
A4A3C70	0160-2055	9		CAPACITOR-FXD .01UF +80-20% 100VDC CER	28480	0160-2055

*Indicates factory selected value

TABLE 1. A4A3, REPLACEABLE PARTS (2 OF 4)

Reference Designation	HP Part Number	C D	Qty	Description	Mfr Code	Mfr Part Number
A4A3C71	0160-4297	5		CAPACITOR-FXD .022UF +80-20% 100VDC CER	56289	C023F101H223ZS22-CDH
A4A3CR1	1901-0047	8	5	DIODE-SWITCHING 20V 75MA 10NS	28480	1901-0047
A4A3CR2	1901-0047	8		DIODE-SWITCHING 20V 75MA 10NS	28480	1901-0047
A4A3CR3	1901-0047	8		DIODE-SWITCHING 20V 75MA 10NS	28480	1901-0047
A4A3CR4	1901-0047	8		DIODE-SWITCHING 20V 75MA 10NS	28480	1901-0047
A4A3CR5	85662-80026	2	2	DTC-SEL1901-0050	28480	85662-80026
A4A3CR6	85662-80026	2		DTC-SEL1901-0050	28480	85662-80026
A4A3CR7	1901-1085	6	20	DIODE-SM SIG SCHOTTKY	28480	1901-1085
A4A3CR8	1901-1085	6		DIODE-SM SIG SCHOTTKY	28480	1901-1085
A4A3CR9	1901-1085	6		DIODE-SM SIG SCHOTTKY	28480	1901-1085
A4A3CR10	1901-1085	6		DIODE-SM SIG SCHOTTKY	28480	1901-1085
A4A3CR11	1901-1085	6		DIODE-SM SIG SCHOTTKY	28480	1901-1085
A4A3CR12	1901-1085	6		DIODE-SM SIG SCHOTTKY	28480	1901-1085
A4A3CR13	1901-1085	6		DIODE-SM SIG SCHOTTKY	28480	1901-1085
A4A3CR14	1901-1085	6		DIODE-SM SIG SCHOTTKY	28480	1901-1085
A4A3CR15	1901-1085	6		DIODE-SM SIG SCHOTTKY	28480	1901-1085
A4A3CR16	1901-1085	6		DIODE-SM SIG SCHOTTKY	28480	1901-1085
A4A3CR17	1901-1085	6		DIODE-SM SIG SCHOTTKY	28480	1901-1085
A4A3CR18	1901-1085	6		DIODE-SM SIG SCHOTTKY	28480	1901-1085
A4A3CR19	1901-1085	6		DIODE-SM SIG SCHOTTKY	28480	1901-1085
A4A3CR20	1901-1085	6		DIODE-SM SIG SCHOTTKY	28480	1901-1085
A4A3CR21	1901-1085	6		DIODE-SM SIG SCHOTTKY	28480	1901-1085
A4A3CR22	1901-1085	6		DIODE-SM SIG SCHOTTKY	28480	1901-1085
A4A3CR23	1901-1085	6		DIODE-SM SIG SCHOTTKY	28480	1901-1085
A4A3CR24	1901-1085	6		DIODE-SM SIG SCHOTTKY	28480	1901-1085
A4A3CR25	1901-1085	6		DIODE-SM SIG SCHOTTKY	28480	1901-1085
A4A3CR26	1901-1085	6		DIODE-SM SIG SCHOTTKY	28480	1901-1085
A4A3CR27	1901-1070	9	4	DIODE-PIN 110V	28480	1901-1070
A4A3CR28	1901-1070	9		DIODE-PIN 110V	28480	1901-1070
A4A3CR29	1901-1070	9		DIODE-PIN 110V	28480	1901-1070
A4A3CR30	1901-1070	9		DIODE-PIN 110V	28480	1901-1070
A4A3CR31	1901-0047	8		DIODE-SWITCHING 20V 75MA 10NS	28480	1901-0047
A4A3L1	9100-1619	2	1	INDUCTOR RF-CH-MLD 6.8UH 10%	28480	9100-1619
A4A3L2	9140-0105	3	5	INDUCTOR RF-CH-MLD 8.2UH 10%	28480	9140-0105
A4A3L3	9140-0105	3		INDUCTOR RF-CH-MLD 8.2UH 10%	28480	9140-0105
A4A3L4	9140-0105	3		INDUCTOR RF-CH-MLD 8.2UH 10%	28480	9140-0105
A4A3L5	9140-0105	3		INDUCTOR RF-CH-MLD 8.2UH 10%	28480	9140-0105
A4A3L6	9100-1618	1	6	INDUCTOR RF-CH-MLD 5.6UH 10%	28480	9100-1618
A4A3L7	9100-1618	1		INDUCTOR RF-CH-MLD 5.6UH 10%	28480	9100-1618
A4A3L8	9100-1618	1		INDUCTOR RF-CH-MLD 5.6UH 10%	28480	9100-1618
A4A3L9	9100-1618	1		INDUCTOR RF-CH-MLD 5.6UH 10%	28480	9100-1618
A4A3L10	9100-1618	1		INDUCTOR RF-CH-MLD 5.6UH 10%	28480	9100-1618
A4A3L11	9100-1618	1		INDUCTOR RF-CH-MLD 5.6UH 10%	28480	9100-1618
A4A3L12	9100-1623	8	1	INDUCTOR RF-CH-MLD 27UH 5% .166DX.385LG	28480	9100-1623
A4A3L13	9140-0105	3		INDUCTOR RF-CH-MLD 8.2UH 10%	28480	9140-0105
A4A3L14	9100-3854	1	1	INDUCTOR 400NH 10% .3DX1.016LG Q=150	28480	9100-3854
A4A3L15	9140-0111	1	1	INDUCTOR RF-CH-MLD 3.3UH 10%	28480	9140-0111
A4A3L16	9140-0098	3	1	INDUCTOR RF-CH-MLD 2.2UH 10%	28480	9140-0098
A4A3Q1	1854-0345	8	1	TRANSISTOR NPN 2N5179 SI TO-72 PD=200MW	04713	2N5179
A4A3Q2	1853-0007	7	3	TRANSISTOR PNP 2N3251 SI TO-18 PD=360MW	04713	2N3251
A4A3Q3	1854-0019	3	11	TRANSISTOR NPN SI TO-18 PD=360MW	28480	1854-0019
A4A3Q4	1854-0019	3		TRANSISTOR NPN SI TO-18 PD=360MW	28480	1854-0019
A4A3Q5	1853-0007	7		TRANSISTOR PNP 2N3251 SI TO-18 PD=360MW	04713	2N3251
A4A3Q6	1854-0019	3		TRANSISTOR NPN SI TO-18 PD=360MW	28480	1854-0019
A4A3Q7	1854-0019	3		TRANSISTOR NPN SI TO-18 PD=360MW	28480	1854-0019
A4A3Q8	1854-0019	3		TRANSISTOR NPN SI TO-18 PD=360MW	28480	1854-0019
A4A3Q9	1854-0019	3		TRANSISTOR NPN SI TO-18 PD=360MW	28480	1854-0019
A4A3Q10	1854-0019	3		TRANSISTOR NPN SI TO-18 PD=360MW	28480	1854-0019
A4A3Q11	1854-0019	3		TRANSISTOR NPN SI TO-18 PD=360MW	28480	1854-0019
A4A3Q12	1854-0019	3		TRANSISTOR NPN SI TO-18 PD=360MW	28480	1854-0019
A4A3Q13	1854-0019	3		TRANSISTOR NPN SI TO-18 PD=360MW	28480	1854-0019
A4A3Q14	1854-0546	1	1	TRANSISTOR NPN SI TO-72 PD=200MW	28480	1854-0546
A4A3Q15	1853-0007	7		TRANSISTOR PNP 2N3251 SI TO-18 PD=360MW	04713	2N3251
A4A3Q16	1854-0404	0	2	TRANSISTOR NPN SI TO-18 PD=360MW	28480	1854-0404
A4A3Q17	1854-0404	0		TRANSISTOR NPN SI TO-18 PD=360MW	28480	1854-0404
A4A3Q18	1854-0019	3		TRANSISTOR NPN SI TO-18 PD=360MW	28480	1854-0019
A4A3Q19	1853-0405	9	1	TRANSISTOR PNP SI PD=300MW FT=850MHZ	04713	2N4209
A4A3R1				NOT ASSIGNED		
A4A3R2	0757-0346	2	6	RESISTOR 10 1% .125W F TC=0+-100	24546	C4-1/8-T0-10R0-F
A4A3R3				NOT ASSIGNED		
A4A3R4	0757-0346	2		RESISTOR 10 1% .125W F TC=0+-100	24546	C4-1/8-T0-10R0-F
A4A3R5	0757-0346	2		RESISTOR 10 1% .125W F TC=0+-100	24546	C4-1/8-T0-10R0-F

TABLE 1. A4A3, REPLACEABLE PARTS (3 OF 4)

Reference Designation	HP Part Number	C D	Qty	Description	Mfr Code	Mfr Part Number
A4A3R6	0757-0346	2		RESISTOR 10 1% .125W F TC=0+-100	24546	C4-1/8-T0-10R0-F
A4A3R7	0757-0346	2		RESISTOR 10 1% .125W F TC=0+-100	24546	C4-1/8-T0-10R0-F
A4A3R8	0757-0401	0	1	RESISTOR 100 1% .125W F TC=0+-100	24546	C4-1/8-T0-101-F
A4A3R9	0757-0439	4	7	RESISTOR 6.81K 1% .125W F TC=0+-100	24546	C4-1/8-T0-6811-F
A4A3R10	0698-3444	1	7	RESISTOR 316 1% .125W F TC=0+-100	24546	C4-1/8-T0-316R-F
A4A3R11	0698-3439	4	3	RESISTOR 178 1% .125W F TC=0+-100	24546	C4-1/8-T0-178R-F
A4A3R12	0698-3429	2	2	RESISTOR 19.6 1% .125W F TC=0+-100	03888	PME55-1/8-T0-19R6-F
A4A3R13	0757-0279	0		RESISTOR 3.16K 1% .125W F TC=0+-100	24546	C4-1/8-T0-3161-F
A4A3R14	0757-0279	0		RESISTOR 3.16K 1% .125W F TC=0+-100	24546	C4-1/8-T0-3161-F
A4A3R15*	0757-0316	6	1	RESISTOR 42.2 1% .125W F TC=0+-100	24546	C4-1/8-T0-42R2-F
A4A3R16	0698-0084	9	3	RESISTOR 2.15K 1% .125W F TC=0+-100	24546	C4-1/8-T0-2151-F
A4A3R17	0698-3151	7	2	RESISTOR 2.87K 1% .125W F TC=0+-100	24546	C4-1/8-T0-2871-F
A4A3R18				NOT ASSIGNED		
A4A3R19	0757-0439	4		RESISTOR 6.81K 1% .125W F TC=0+-100	24546	C4-1/8-T0-6811-F
A4A3R20	0698-3444	1		RESISTOR 316 1% .125W F TC=0+-100	24546	C4-1/8-T0-316R-F
A4A3R21	0698-3429	2		RESISTOR 19.6 1% .125W F TC=0+-100	03888	PME55-1/8-T0-19R6-F
A4A3R22	0698-3439	4		RESISTOR 178 1% .125W F TC=0+-100	24546	C4-1/8-T0-178R-F
A4A3R23	0757-0274	5	3	RESISTOR 1.21K 1% .125W F TC=0+-100	24546	C4-1/8-T0-1211-F
A4A3R24	0757-0279	0		RESISTOR 3.16K 1% .125W F TC=0+-100	24546	C4-1/8-T0-3161-F
A4A3R25*	0757-0394	0	2	RESISTOR 51.1 1% .125W F TC=0+-100	24546	C4-1/8-T0-51R1-F
A4A3R26	0698-3151	7		RESISTOR 2.87K 1% .125W F TC=0+-100	24546	C4-1/8-T0-2871-F
A4A3R27	0698-0084	9		RESISTOR 2.15K 1% .125W F TC=0+-100	24546	C4-1/8-T0-2151-F
A4A3R28				NOT ASSIGNED		
A4A3R29*	0698-3440	7	1	RESISTOR 196 1% .125W F TC=0+-100	24546	C4-1/8-T0-196R-F
A4A3R30	0698-3444	1		RESISTOR 316 1% .125W F TC=0+-100	24546	C4-1/8-T0-316R-F
A4A3R31	0698-3444	1		RESISTOR 316 1% .125W F TC=0+-100	24546	C4-1/8-T0-316R-F
A4A3R32	0757-0439	4		RESISTOR 6.81K 1% .125W F TC=0+-100	24546	C4-1/8-T0-6811-F
A4A3R33	0757-0279	0		RESISTOR 3.16K 1% .125W F TC=0+-100	24546	C4-1/8-T0-3161-F
A4A3R34	0757-0279	0		RESISTOR 3.16K 1% .125W F TC=0+-100	24546	C4-1/8-T0-3161-F
A4A3R35*	0757-0180	2	1	RESISTOR 31.6 1% .125W F TC=0+-100	28480	0757-0180
A4A3R36	0757-0441	8	2	RESISTOR 8.25K 1% .125W F TC=0+-100	24546	C4-1/8-T0-8251-F
A4A3R37	0757-0441	8		RESISTOR 8.25K 1% .125W F TC=0+-100	24546	C4-1/8-T0-8251-F
A4A3R38*	0698-3443	0	1	RESISTOR 287 1% .125W F TC=0+-100	24546	C4-1/8-T0-287R-F
A4A3R39	0698-3446	3	1	RESISTOR 383 1% .125W F TC=0+-100	24546	C4-1/8-T0-383R-F
A4A3R40	0698-3444	1		RESISTOR 316 1% .125W F TC=0+-100	24546	C4-1/8-T0-316R-F
A4A3R41	0757-0439	4		RESISTOR 6.81K 1% .125W F TC=0+-100	24546	C4-1/8-T0-6811-F
A4A3R42	0757-0279	0		RESISTOR 3.16K 1% .125W F TC=0+-100	24546	C4-1/8-T0-3161-F
A4A3R43	0757-0279	0		RESISTOR 3.16K 1% .125W F TC=0+-100	24546	C4-1/8-T0-3161-F
A4A3R44	0698-3136	8	4	RESISTOR 17.8K 1% .125W F TC=0+-100	24546	C4-1/8-T0-1782-F
A4A3R45	0698-3136	8		RESISTOR 17.8K 1% .125W F TC=0+-100	24546	C4-1/8-T0-1782-F
A4A3R46				NOT ASSIGNED		
A4A3R47*	0757-0279	0	12	RESISTOR 3.16K 1% .125W F TC=0+-100	24546	C4-1/8-T0-3161-F
A4A3R48	0698-3444	1		RESISTOR 316 1% .125W F TC=0+-100	24546	C4-1/8-T0-316R-F
A4A3R49	0757-0439	4		RESISTOR 6.81K 1% .125W F TC=0+-100	24546	C4-1/8-T0-6811-F
A4A3R50	0757-0279	0		RESISTOR 3.16K 1% .125W F TC=0+-100	24546	C4-1/8-T0-3161-F
A4A3R51	0757-0279	0		RESISTOR 3.16K 1% .125W F TC=0+-100	24546	C4-1/8-T0-3161-F
A4A3R52	0698-3136	8		RESISTOR 17.8K 1% .125W F TC=0+-100	24546	C4-1/8-T0-1782-F
A4A3R53	0698-3136	8		RESISTOR 17.8K 1% .125W F TC=0+-100	24546	C4-1/8-T0-1782-F
A4A3R54*	0757-0399	5	1	RESISTOR 82.5 1% .125W F TC=0+-100	24546	C4-1/8-T0-82R5-F
A4A3R55				NOT ASSIGNED		
A4A3R56				NOT ASSIGNED		
A4A3R57	0757-0442	9	6	RESISTOR 10K 1% .125W F TC=0+-100	24546	C4-1/8-T0-1002-F
A4A3R58				NOT ASSIGNED		
A4A3R59	0757-0439	4		RESISTOR 6.81K 1% .125W F TC=0+-100	24546	C4-1/8-T0-6811-F
A4A3R60	0698-0084	9		RESISTOR 2.15K 1% .125W F TC=0+-100	24546	C4-1/8-T0-2151-F
A4A3R61	0698-0082	7	2	RESISTOR 464 1% .125W F TC=0+-100	24546	C4-1/8-T0-4640-F
A4A3R62	0757-0274	5		RESISTOR 1.21K 1% .125W F TC=0+-100	24546	C4-1/8-T0-1211-F
A4A3R63	0757-0439	4		RESISTOR 6.81K 1% .125W F TC=0+-100	24546	C4-1/8-T0-6811-F
A4A3R64	0698-3439	4		RESISTOR 178 1% .125W F TC=0+-100	24546	C4-1/8-T0-178R-F
A4A3R65	0757-0274	5		RESISTOR 1.21K 1% .125W F TC=0+-100	24546	C4-1/8-T0-1211-F
A4A3R66*	0757-0466	7	1	RESISTOR 110K 1% .125W F TC=0+-100	24546	C4-1/8-T0-1103-F
A4A3R67	2100-3054	6	1	RESISTOR-TRMR 50K 10% C SIDE-ADJ 17-TRN	02111	43P503
A4A3R68	0698-0082	7		RESISTOR 464 1% .125W F TC=0+-100	24546	C4-1/8-T0-4640-F
A4A3R69	0698-3444	1		RESISTOR 316 1% .125W F TC=0+-100	24546	C4-1/8-T0-316R-F
A4A3R70	0757-0416	7	1	RESISTOR 511 1% .125W F TC=0+-100	24546	C4-1/8-T0-511R-F
A4A3R71	0757-0394	0		RESISTOR 51.1 1% .125W F TC=0+-100	24546	C4-1/8-T0-51R1-F
A4A3R72	0757-0280	3	3	RESISTOR 1K 1% .125W F TC=0+-100	24546	C4-1/8-T0-1001-F
A4A3R73	0757-0418	9	1	RESISTOR 619 1% .125W F TC=0+-100	24546	C4-1/8-T0-619R-F
A4A3R74*	0698-3153	9	1	RESISTOR 3.83K 1% .125W F TC=0+-100	24546	C4-1/8-T0-3831-F
A4A3R75				NOT ASSIGNED		
A4A3R76	0757-0442	9		RESISTOR 10K 1% .125W F TC=0+-100	24546	C4-1/8-T0-1002-F
A4A3R77	0757-0442	9		RESISTOR 10K 1% .125W F TC=0+-100	24546	C4-1/8-T0-1002-F
A4A3R78	0757-0442	9		RESISTOR 10K 1% .125W F TC=0+-100	24546	C4-1/8-T0-1002-F
A4A3R79*	0757-0458	7	1	RESISTOR 51.1K 1% .125W F TC=0+-100	24546	C4-1/8-T0-5112-F
A4A3R80*	0698-0083	8	1	RESISTOR 1.96K 1% .125W F TC=0+-100	24546	C4-1/8-T0-1961-F

*Indicates factory selected value

TABLE 1. A4A3, REPLACEABLE PARTS (4 OF 4)

Reference Designation	HP Part Number	CD	Qty	Description	Mfr Code	Mfr Part Number
A4A3R81*	0757-0447	4	1	RESISTOR 16.2K 1% .125W F TC=0+-100	24546	C4-1/8-T0-1622-F
A4A3R82	0757-0279	0		RESISTOR 3.16K 1% .125W F TC=0+-100	24546	C4-1/8-T0-3161-F
A4A3R83	2100-3161	6	1	RESISTOR-TRMR 20K 10% C SIDE-ADJ 17-TRN	02111	43P203
A4A3R84	0757-0279	0		RESISTOR 3.16K 1% .125W F TC=0+-100	24546	C4-1/8-T0-3161-F
A4A3R85	0757-0442	9		RESISTOR 10K 1% .125W F TC=0+-100	24546	C4-1/8-T0-1002-F
A4A3R86				NOT ASSIGNED		
A4A3R87	0757-0346	2		RESISTOR 10 1% .125W F TC=0+-100	24546	C4-1/8-T0-10R0-F
A4A3R88	0698-3160	8	1	RESISTOR 31.6K 1% .125W F TC=0+-100	24546	C4-1/8-T0-3162-F
A4A3R89	0757-0280	3		RESISTOR 1K 1% .125W F TC=0+-100	24546	C4-1/8-T0-1001-F
A4A3R90	0757-0465	6	1	RESISTOR 100K 1% .125W F TC=0+-100	24546	C4-1/8-T0-1003-F
A4A3R91				NOT ASSIGNED		
A4A3R92	0757-0442	9		RESISTOR 10K 1% .125W F TC=0+-100	24546	C4-1/8-T0-1002-F
A4A3R93	0757-0280	3		RESISTOR 1K 1% .125W F TC=0+-100	24546	C4-1/8-T0-1001-F
A4A3TP1	1251-0600	0	11	CONNECTOR-SGL CONT PIN 1.14-MM-BSC-SZ SQ	28480	1251-0600
A4A3TP2	1251-0600	0		CONNECTOR-SGL CONT PIN 1.14-MM-BSC-SZ SQ	28480	1251-0600
A4A3TP3	1251-0600	0		CONNECTOR-SGL CONT PIN 1.14-MM-BSC-SZ SQ	28480	1251-0600
A4A3TP4	1251-0600	0		CONNECTOR-SGL CONT PIN 1.14-MM-BSC-SZ SQ	28480	1251-0600
A4A3TP5	1251-0600	0		CONNECTOR-SGL CONT PIN 1.14-MM-BSC-SZ SQ	28480	1251-0600
A4A3TP6	1251-0600	0		CONNECTOR-SGL CONT PIN 1.14-MM-BSC-SZ SQ	28480	1251-0600
A4A3TP7	1251-0600	0		CONNECTOR-SGL CONT PIN 1.14-MM-BSC-SZ SQ	28480	1251-0600
A4A3TP8	1251-0600	0		CONNECTOR-SGL CONT PIN 1.14-MM-BSC-SZ SQ	28480	1251-0600
A4A3TP9	1251-0600	0		CONNECTOR-SGL CONT PIN 1.14-MM-BSC-SZ SQ	28480	1251-0600
A4A3TP10	1251-0600	0		CONNECTOR-SGL CONT PIN 1.14-MM-BSC-SZ SQ	28480	1251-0600
A4A3TP11	1251-0600	0		CONNECTOR-SGL CONT PIN 1.14-MM-BSC-SZ SQ	28480	1251-0600
A4A3U1	1826-1058	3	1	IC OP AMP GP 8-TO-99 PKG	28480	1826-1058
A4A3VR1	1902-0126	6	1	DIODE-ZNR 2.61V 5% DO-7 PD=.4W TC=-.072%	28480	1902-0126
A4A3VR2	1902-0579	3	1	DIODE-ZNR 5.1V 5% PD=1W IR=10UA	28480	1902-0579
A4A3VR3	1902-0041	4	1	DIODE-ZNR 5.11V 5% DO-35 PD=.4W	28480	1902-0041
				MISCELLANEOUS PARTS		
	6960-0016	0	2	PLUG-HOLE TR-HD FOR .125-D-HOLE NYL	28480	6960-0016
	6960-0069	3	3	PLUG-HOLE CNCL-HD FOR .125-D-HOLE NYL	28480	6960-0069
	05662-20037	9	1	COVER LOG AMPLIFIER	28480	05662-20037

*Indicates factory selected value

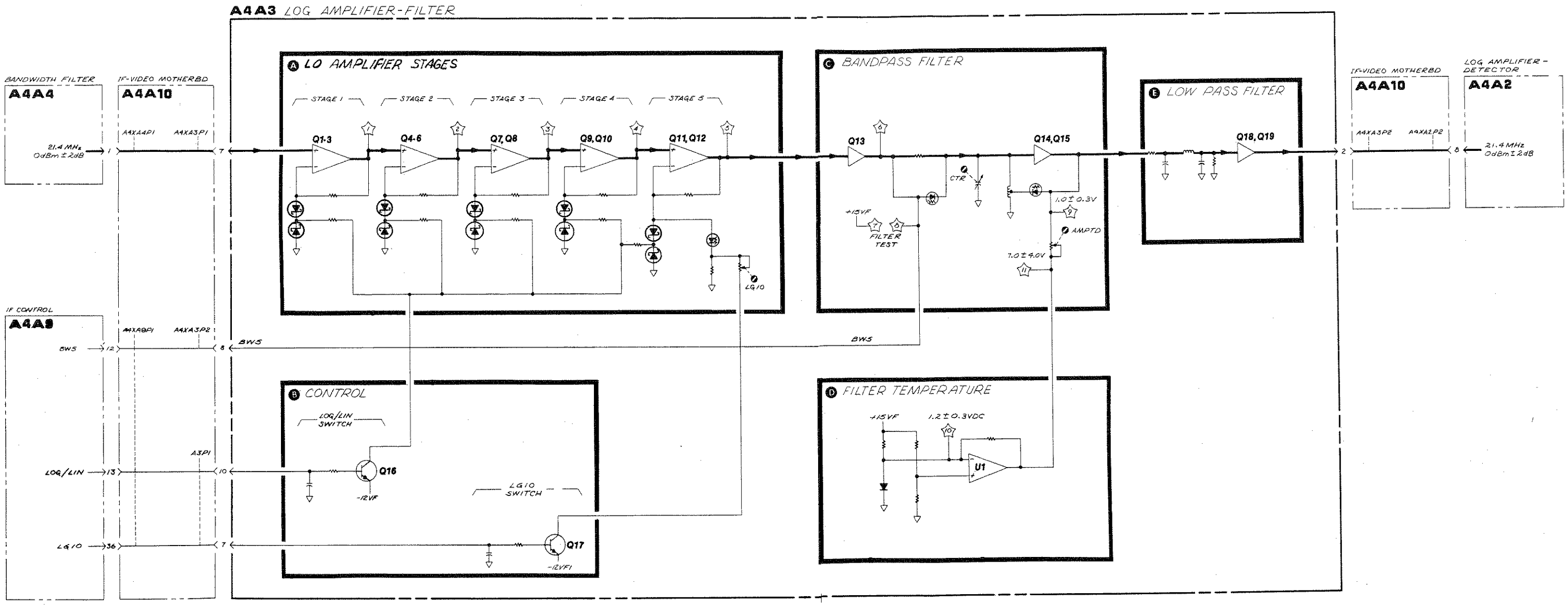

A4A3

FIGURE 3. A4A3 LOG AMPLIFIER-FILTER, BLOCK DIAGRAM

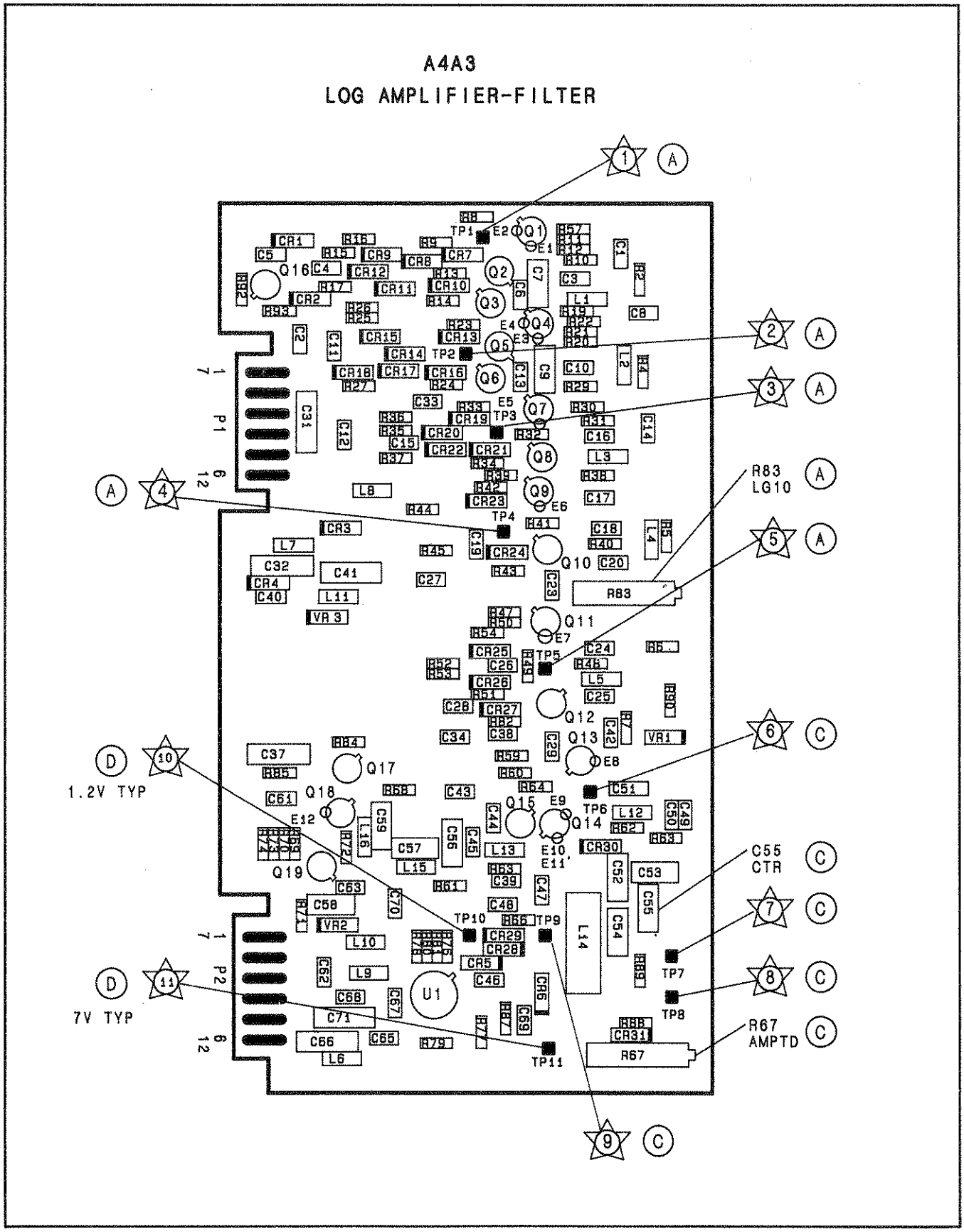

FIGURE 4. A4A3 LOG AMPLIFIER-FILTER, COMPONENT LOCATIONS

A4A3 LOG AMPLIFIER-FILTER
85662-60009

P1

PIN	SIGNAL	TO/FROM	FUNCTION BLOCK
1	GND		F
7	21.4MHz	A4A4P1-1	A
2	GND		F
8	GND		F
3	GND		F
9	GND		F
4	GND		F
10	LOG/LIN	A4A9P1-13	B
5	GND		F
11	AGC	A4A2P1-10	B
6	GND		F
12	-12VTV	A4A2P1-12	F

P2

PIN	SIGNAL	TO/FROM	FUNCTION BLOCK
1	GND		F
7	LG10	A4A9P1-36	B
2	21.4MHz	A4A2P2-5	E
8	BW5	A4A9P1-12	C
3	GND		F
9	GND		F
4	GND		F
10	GND		F
5	-15V		F
11	-15V		F
6	+15V		F
12	+15V		F

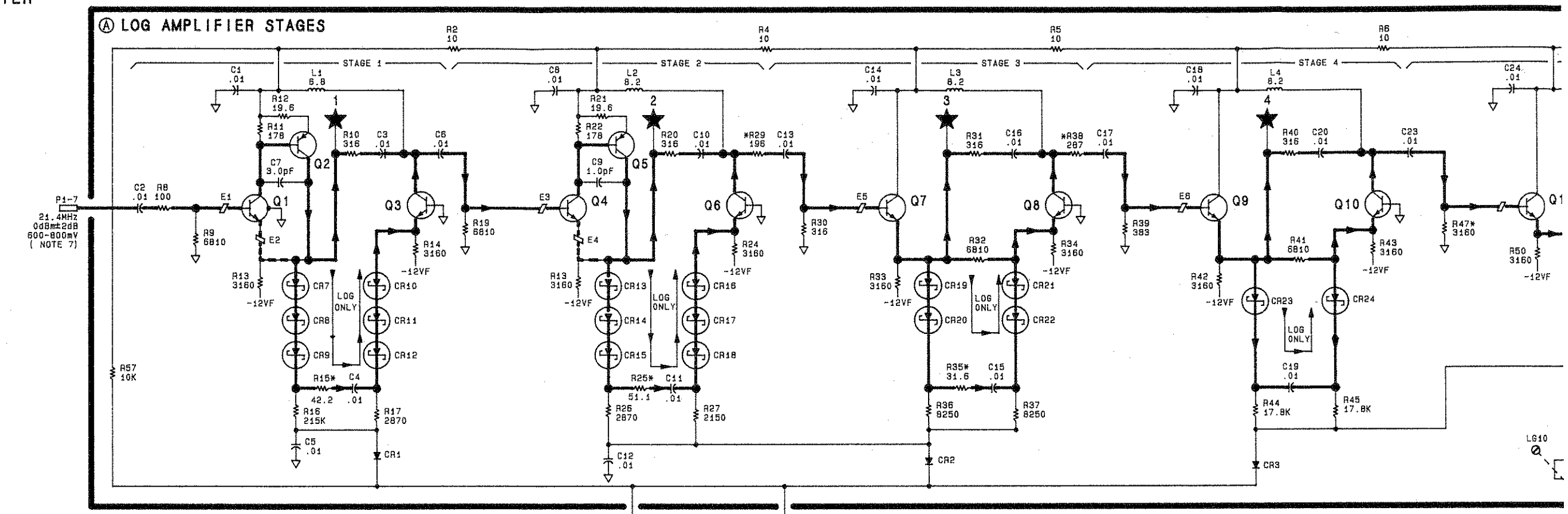

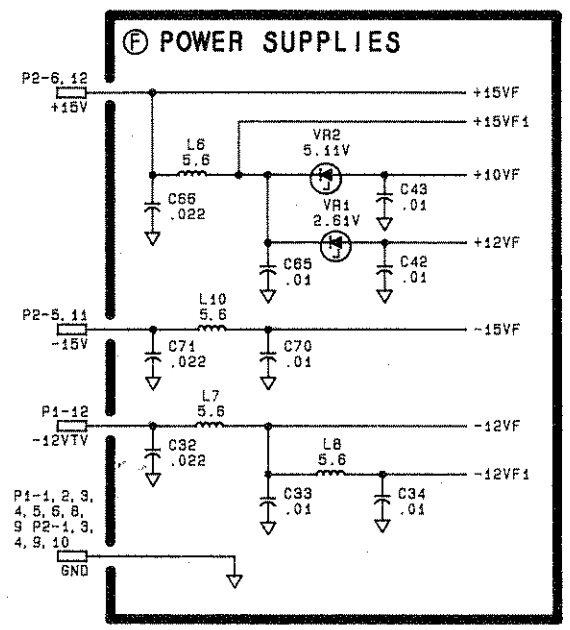

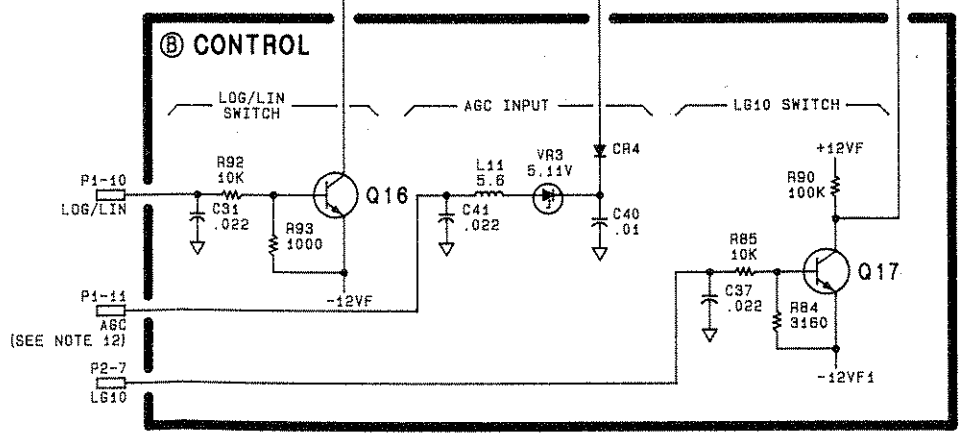

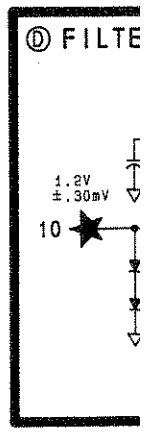

SERIAL PREFIX: 2403A

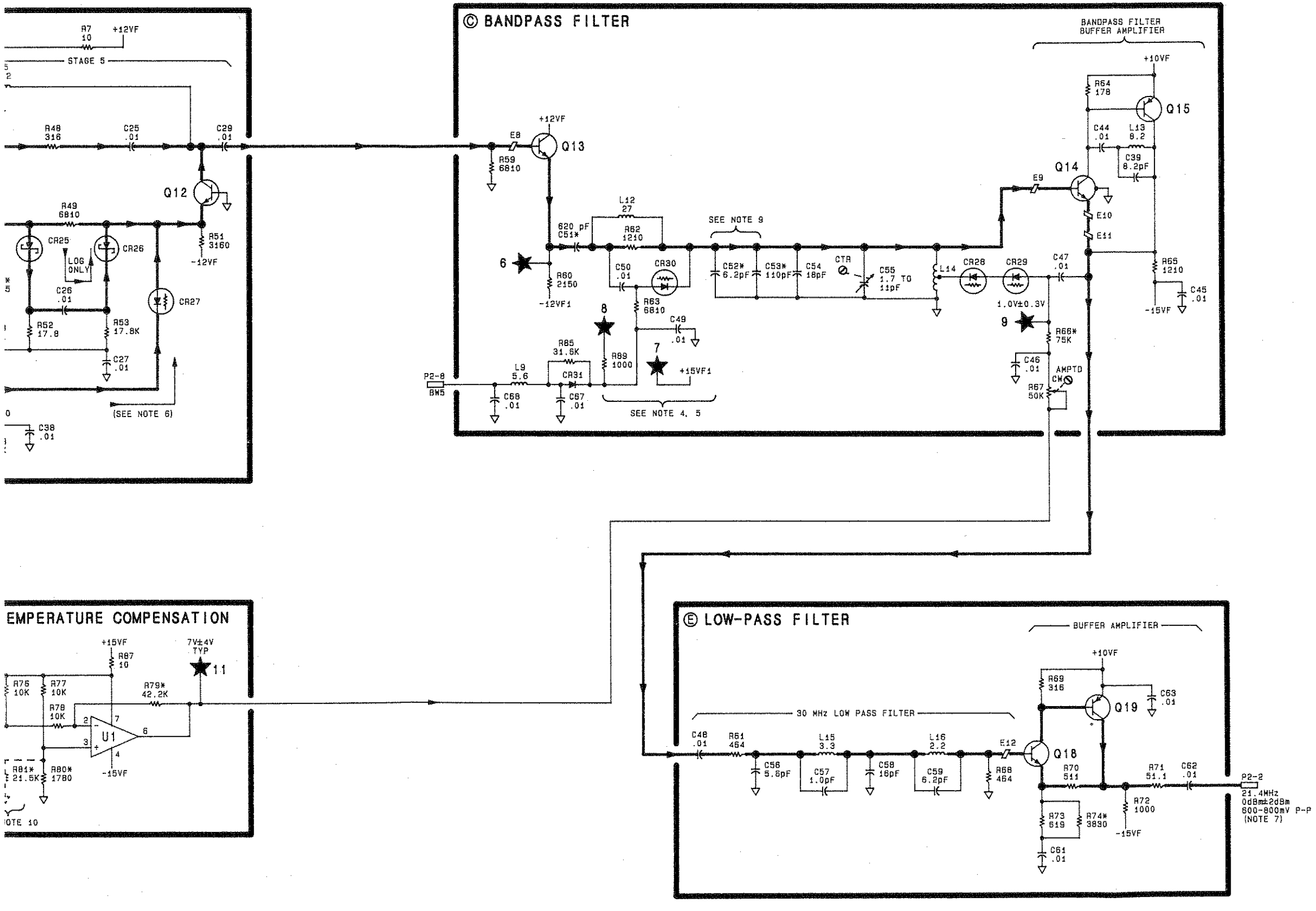

NOTES:

1. REFERENCE DESIGNATORS WITHIN THIS ASSEMBLY ARE ABBREVIATED. FOR COMPLETE REFERENCE DESIGNATION, PREFIX ABBREVIATION WITH ASSEMBLY DESIGNATION.
2. UNLESS OTHERWISE INDICATED:
   RESISTANCE IS IN OHMS (Ω)
   CAPACITANCE IS IN MICROFARADS (μF)
   INDUCTANCE IS IN MICROHENRIES (μH)
3. * INDICATES FACTORY SELECTED COMPONENT; TYPICAL VALUE SHOWN.
4. BANDPASS FILTER WIDE/NARROW CONDITIONS:

BW5	RESOLUTION BW	FILTER BANDWIDTH	CR30 BIAS
HI +14.8V (TYP)	100kHz TO 3MHz	WIDE (APPROX. 20MHz)	FORWARD
LO -.6V (TYP)	10Hz TO 30 Hz	NARROW (APPROX. 1MHz)	REVERSE

5. FOR ADJUSTMENT OF BANDPASS FILTER, TP8 IS SHORTED TO TP7 WHICH FORWARD BIASES CR30 TO PLACE FILTER IN "WIDE" MODE (APPROX. 20MHz).
6. LG 10 OPERATION:
   CONTROL SETTINGS: (INSTR PRESET)
   ATTENUATION 0dB
   LINEAR
   RESOLUTION BANDWIDTH 3kHz

REFERENCE LEVEL	LG10	CR27 BIAS
50 μV	HI (-3V TO +1V)	FORWARD
50 mV	LO (-14V TO -10V)	REVERSE

7. LOG AMPLIFIER STAGE GAIN CHECK:
   CONTROL SETTINGS: (INSTR PRESET)
   CENTER FREQUENCY....CAL. OUT FREQ.
   FREQUENCY SPAN.....0Hz
   RES BW.....100kHz
   REFERENCE LEVEL....0dBm
   ATTENUATION.....10dB
   CONNECT HP355D ATTENUATOR BETWEEN CAL OUTPUT AND SIGNAL INPUT 2 CONNECTOR

20MHz CALIBRATOR ATTENUATED BY	TEST POINT	LEVELS ±25%
0dB	P1-7	700mV P-P
0dB	1	700mV P-P
10dB	2	700mV P-P
20dB	3	280mV P-P
30dB	4	100mV P-P
30dB	5	330mV P-P
30dB	P2-2	700mV P-P

8. MNEMONIC TABLE:

MNEMONIC	DESCRIPTION
LG10	LINEAR GAIN STEP (10dB)
LOG/LIN	LOG-LINEAR CONTROL
AGC	AUTOMATIC GAIN CONTROL VOLTAGE INPUT
BW5	BANDWIDTH CONTROL LINE 5

9. C52 AND C53 IS FACTORY SELECTED IF REQUIRED TO ADJUST FILTER CENTER FREQUENCY.
10. R81 IS FACTORY SELECTED FOR TEMPERATURE COMPENSATION AND MAY NOT BE PRESENT.
11. LOG/LIN CONTROL LEVELS:

	LOG/LIN
LOG	5V TO 10V
LIN	-10V TO -14V

12. REFER TO NOTE 9 ON A4A2 LOG AMPLIFIER DETECTOR SCHEMATIC.
13. UNLESS OTHERWISE INDICATED:
    SIGNALS ENTER AT LEFT SIDE AND EXIT AT RIGHT SIDE OF FUNCTION BLOCKS.

A4A3

FIGURE 5. A4A3 LOG AMPLIFIER-FILTER, SCHEMATIC DIAGRAM

A4A4 BANDWIDTH FILTER, CIRCUIT DESCRIPTION

A4A4 Bandwidth Filter determines the bandwidth of the 21.4 MHz IF in conjunction with A4A8 Attenuator-Bandwidth Filter. A4A4 is very similar to A4A8 except that it does not have a switchable gain input amplifier, and it has an extra stage of crystal filtering. Only the 10 dB Gain Input Buffer Amplifier will be described here. For descriptions of the other circuits in A4A4, refer to descriptions of the corresponding circuits in A4A8.

Input Buffer Amplifier (A)

The 10 dB Input Buffer Amplifier (Figure 1) functions as a noninverting op amp.

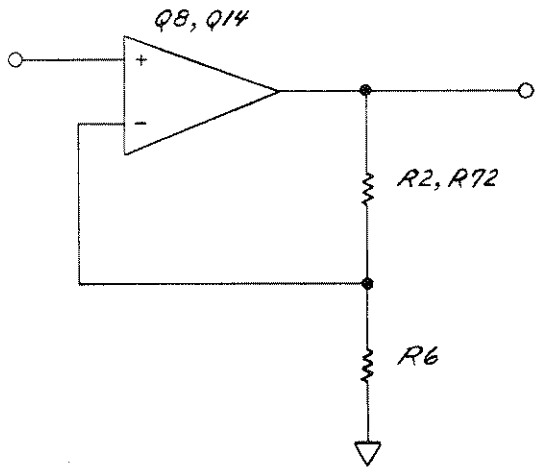

FIGURE 1. A4A4 INPUT BUFFER AMPLIFIER, EQUIVALENT CIRCUIT

In the crystal mode (30 kHz, 10 kHz, and 3 kHz bandwidths), the amplifier includes Q7. The biasing of the amplifier is independent of its RF (21.4 MHz) operation but is very critical for its proper functioning. If a malfunction occurs, the dc bias should be checked first.

The current through Q14 is determined by the difference between two current sources, one involving Q7 and the other involving Q8 (see Figure 2). The most convenient way to find the current from each source is to measure the voltage across each emitter resistor (A 1 kΩ resistor should be used in series with the voltmeter probe tip to prevent the circuit from oscillating and giving an erroneous reading). For Q7, the current through R90 must be included. If results are inconsistent, the emitter resistor should be checked also. Check to see that the BW5 line is at the voltage specified on the schematic.

In the LC mode (the four wider bandwidths), the BW5 line goes to approximately + 14.8V and turns off the current source Q7. The current supplied by Q7 in the crystal mode is now supplied through CR1 and R12 from the BW5 line. In the LC mode, the current through Q14 can be found by subtracting the current through R12 from the current through R4.

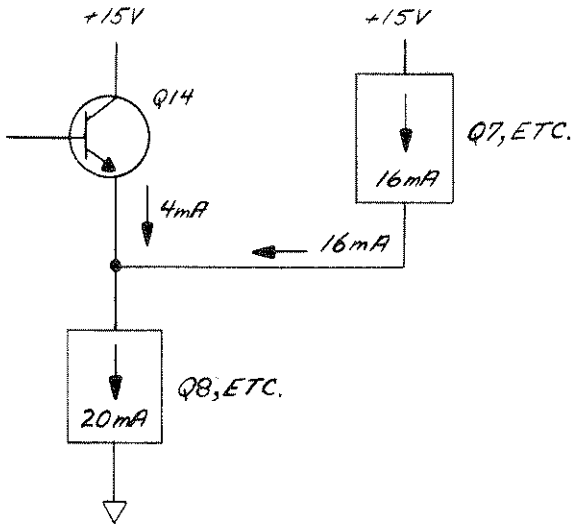

FIGURE 2. A4A4 INPUT BUFFER AMPLIFIER, CURRENT SINKS

TABLE 1. A4A4, REPLACEABLE PARTS (1 OF 4)

Reference Designation	HP Part Number	C D	Qty	Description	Mfr Code	Mfr Part Number
A4A4	85662-60142	1	1	BOARD ASSEMBLY, BANDWIDTH FILTER	28480	85662-60142
A4A4C1	0160-4832	4	51	CAPACITOR-FXD .01UF +-10% 100VDC CER	28480	0160-4832
A4A4C2	0160-4832	4		CAPACITOR-FXD .01UF +-10% 100VDC CER	28480	0160-4832
A4A4C3	0160-2254	0	1	CAPACITOR-FXD 7.5PF +-.25PF 500VDC CER	28480	0160-2254
A4A4C4	0160-4832	4		CAPACITOR-FXD .01UF +-10% 100VDC CER	28480	0160-4832
A4A4C5	0160-4832	4		CAPACITOR-FXD .01UF +-10% 100VDC CER	28480	0160-4832
A4A4C6	0160-4833	5	3	CAPACITOR-FXD .022UF +-10% 100VDC CER	28480	0160-4833
A4A4C7	0160-4832	4		CAPACITOR-FXD .01UF +-10% 100VDC CER	28480	0160-4832
A4A4C8	0160-2257	3	3	CAPACITOR-FXD 10PF +-5% 500VDC CER 0+-60	28480	0160-2257
A4A4C9	0121-0059	7	3	CAPACITOR-V TRMR-CER 2-8PF 350V PC-MTG	52763	304324 2/8PF NPO
A4A4C10*	0160-2249	3	3	CAPACITOR-FXD 4.7PF +-.25PF 500VDC CER	28480	0160-2249
A4A4C11	0160-4832	4		CAPACITOR-FXD .01UF +-10% 100VDC CER	28480	0160-4832
A4A4C12				NOT ASSIGNED		
A4A4C13	0160-4832	4		CAPACITOR-FXD .01UF +-10% 100VDC CER	28480	0160-4832
A4A4C14	0160-4832	4		CAPACITOR-FXD .01UF +-10% 100VDC CER	28480	0160-4832
A4A4C15	0160-4574	1	2	CAPACITOR-FXD 1000PF +-10% 100VDC CER	28480	0160-4574
A4A4C16	0160-0437	7	2	CAPACITOR-FXD 12PF +-5% 500VDC CER	28480	0160-0437
A4A4C17*	0160-0134	1	4	CAPACITOR-FXD 220PF +-5% 300VDC MICA	28480	0160-0134
A4A4C18	0160-4832	4		CAPACITOR-FXD .01UF +-10% 100VDC CER	28480	0160-4832
A4A4C19	0121-0036	0	2	CAPACITOR-V TRMR-CER 5.5-18PF 350V	52763	304324 5.5/18PF NPO
A4A4C20	0121-0446	6	3	CAPACITOR-V TRMR-CER 4.5-20PF 160V	28480	0121-0446
A4A4C21	0160-4832	4		CAPACITOR-FXD .01UF +-10% 100VDC CER	28480	0160-4832
A4A4C22	0160-4832	4		CAPACITOR-FXD .01UF +-10% 100VDC CER	28480	0160-4832
A4A4C23	0160-4832	4		CAPACITOR-FXD .01UF +-10% 100VDC CER	28480	0160-4832
A4A4C24	0160-4832	4		CAPACITOR-FXD .01UF +-10% 100VDC CER	28480	0160-4832
A4A4C25	0160-4832	4		CAPACITOR-FXD .01UF +-10% 100VDC CER	28480	0160-4832
A4A4C26	0160-4832	4		CAPACITOR-FXD .01UF +-10% 100VDC CER	28480	0160-4832
A4A4C27	0160-4832	4		CAPACITOR-FXD .01UF +-10% 100VDC CER	28480	0160-4832
A4A4C28	0140-0194	1	1	CAPACITOR-FXD 110PF +-5% 300VDC MICA	72136	DM15F111J0300WV1CR
A4A4C29	0160-4832	4		CAPACITOR-FXD .01UF +-10% 100VDC CER	28480	0160-4832
A4A4C30	0160-4832	4		CAPACITOR-FXD .01UF +-10% 100VDC CER	28480	0160-4832
A4A4C31	0160-2207	3	3	CAPACITOR-FXD 300PF +-5% 300VDC MICA	28480	0160-2207
A4A4C32	0160-4832	4		CAPACITOR-FXD .01UF +-10% 100VDC CER	28480	0160-4832
A4A4C33	0160-4833	5		CAPACITOR-FXD .022UF +-10% 100VDC CER	28480	0160-4833
A4A4C34	0160-4832	4		CAPACITOR-FXD .01UF +-10% 100VDC CER	28480	0160-4832
A4A4C35	0160-4832	4		CAPACITOR-FXD .01UF +-10% 100VDC CER	28480	0160-4832
A4A4C36	0160-4832	4		CAPACITOR-FXD .01UF +-10% 100VDC CER	28480	0160-4832
A4A4C37	0160-2257	3		CAPACITOR-FXD 10PF +-5% 500VDC CER 0+-60	28480	0160-2257
A4A4C38*	0160-2249	3		CAPACITOR-FXD 4.7PF +-.25PF 500VDC CER	28480	0160-2249
A4A4C39	0121-0059	7		CAPACITOR-V TRMR-CER 2-8PF 350V PC-MTG	52763	304324 2/8PF NPO
A4A4C40	0160-4832	4		CAPACITOR-FXD .01UF +-10% 100VDC CER	28480	0160-4832
A4A4C41	0121-0452	4	2	CAPACITOR-V TRMR-AIR 1.3-5.4PF 175V	74970	187-0103-020
A4A4C42				NOT ASSIGNED		
A4A4C43	0121-0452	4		CAPACITOR-V TRMR-AIR 1.3-5.4PF 175V	74970	187-0103-020
A4A4C44				NOT ASSIGNED		
A4A4C45				NOT ASSIGNED		
A4A4C46	0160-4835	7	3	CAPACITOR-FXD .1UF +-10% 50VDC CER	28480	0160-4835
A4A4C47	0160-4832	4		CAPACITOR-FXD .01UF +-10% 100VDC CER	28480	0160-4832
A4A4C48	0160-4832	4		CAPACITOR-FXD .01UF +-10% 100VDC CER	28480	0160-4832
A4A4C49	0160-4832	4		CAPACITOR-FXD .01UF +-10% 100VDC CER	28480	0160-4832
A4A4C50	0160-4832	4		CAPACITOR-FXD .01UF +-10% 100VDC CER	28480	0160-4832
A4A4C51				NOT ASSIGNED		
A4A4C52	0160-4832	4		CAPACITOR-FXD .01UF +-10% 100VDC CER	28480	0160-4832
A4A4C53	0160-4832	4		CAPACITOR-FXD .01UF +-10% 100VDC CER	28480	0160-4832
A4A4C54	0160-4832	4		CAPACITOR-FXD .01UF +-10% 100VDC CER	28480	0160-4832
A4A4C55	0160-4833	5		CAPACITOR-FXD .022UF +-10% 100VDC CER	28480	0160-4833
A4A4C56	0160-4832	4		CAPACITOR-FXD .01UF +-10% 100VDC CER	28480	0160-4832
A4A4C57	0160-2207	3		CAPACITOR-FXD 300PF +-5% 300VDC MICA	28480	0160-2207
A4A4C58	0160-4832	4		CAPACITOR-FXD .01UF +-10% 100VDC CER	28480	0160-4832
A4A4C59	0160-4832	4		CAPACITOR-FXD .01UF +-10% 100VDC CER	28480	0160-4832
A4A4C60	0160-4832	4		CAPACITOR-FXD .01UF +-10% 100VDC CER	28480	0160-4832
A4A4C61	0160-4832	4		CAPACITOR-FXD .01UF +-10% 100VDC CER	28480	0160-4832
A4A4C62	0160-4574	1		CAPACITOR-FXD 1000PF +-10% 100VDC CER	28480	0160-4574
A4A4C63	0160-4832	4		CAPACITOR-FXD .01UF +-10% 100VDC CER	28480	0160-4832
A4A4C64	0160-2257	3		CAPACITOR-FXD 10PF +-5% 500VDC CER 0+-60	28480	0160-2257
A4A4C65	0121-0059	7		CAPACITOR-V TRMR-CER 2-8PF 350V PC-MTG	52763	304324 2/8PF NPO
A4A4C66*	0160-2249	3		CAPACITOR-FXD 4.7PF +-.25PF 500VDC CER	28480	0160-2249
A4A4C67	0121-0036	0		CAPACITOR-V TRMR-CER 5.5-18PF 350V	52763	304324 5.5/18PF NPO
A4A4C68	0160-4832	4		CAPACITOR-FXD .01UF +-10% 100VDC CER	28480	0160-4832
A4A4C69	0160-0437	7		CAPACITOR-FXD 12PF +-5% 500VDC CER	28480	0160-0437
A4A4C70*	0160-0134	1		CAPACITOR-FXD 220PF +-5% 300VDC MICA	28480	0160-0134

*Indicates factory selected value

TABLE 1. A4A4, REPLACEABLE PARTS (2 OF 4)

Reference Designation	HP Part Number	C D	Qty	Description	Mfr Code	Mfr Part Number
A4A4C71	0160-4832	4		CAPACITOR-FXD .01UF +-10% 100VDC CER	28480	0160-4832
A4A4C72	0160-4832	4		CAPACITOR-FXD .01UF +-10% 100VDC CER	28480	0160-4832
A4A4C73	0121-0446	6		CAPACITOR-V TRMR-CER 4.5-20PF 160V	28480	0121-0446
A4A4C74	0121-0446	6		CAPACITOR-V TRMR-CER 4.5-20PF 160V	28480	0121-0446
A4A4C75				NOT ASSIGNED		
A4A4C76	0160-4832	4		CAPACITOR-FXD .01UF +-10% 100VDC CER	28480	0160-4832
A4A4C77	0160-4832	4		CAPACITOR-FXD .01UF +-10% 100VDC CER	28480	0160-4832
A4A4C78	0160-4832	4		CAPACITOR-FXD .01UF +-10% 100VDC CER	28480	0160-4832
A4A4C79	0160-4832	4		CAPACITOR-FXD .01UF +-10% 100VDC CER	28480	0160-4832
A4A4C80	0160-4832	4		CAPACITOR-FXD .01UF +-10% 100VDC CER	28480	0160-4832
A4A4C81	0160-4832	4		CAPACITOR-FXD .01UF +-10% 100VDC CER	28480	0160-4832
A4A4C82				NOT ASSIGNED		
A4A4C83				NOT ASSIGNED		
A4A4C84	0160-2207	3		CAPACITOR-FXD 300PF +-5% 300VDC MICA	28480	0160-2207
A4A4C85				NOT ASSIGNED		
A4A4C86	0160-4832	4		CAPACITOR-FXD .01UF +-10% 100VDC CER	28480	0160-4832
A4A4C87	0160-4835	7		CAPACITOR-FXD .1UF +-10% 50VDC CER	28480	0160-4835
A4A4C88	0160-4835	7		CAPACITOR-FXD .1UF +-10% 50VDC CER	28480	0160-4835
A4A4C89	0160-4832	4		CAPACITOR-FXD .01UF +-10% 100VDC CER	28480	0160-4832
A4A4C90	0160-4832	4		CAPACITOR-FXD .01UF +-10% 100VDC CER	28480	0160-4832
A4A4C91	0160-2258	4	3	CAPACITOR-FXD 11PF +-5% 500VDC CER 0+-30	28480	0160-2258
A4A4C92	0160-0134	1		CAPACITOR-FXD 220PF +-5% 300VDC MICA	28480	0160-0134
A4A4C93	0160-4832	4		CAPACITOR-FXD .01UF +-10% 100VDC CER	28480	0160-4832
A4A4C94	0160-2258	4		CAPACITOR-FXD 11PF +-5% 500VDC CER 0+-30	28480	0160-2258
A4A4C95	0160-4832	4		CAPACITOR-FXD .01UF +-10% 100VDC CER	28480	0160-4832
A4A4C96	0160-2258	4		CAPACITOR-FXD 11PF +-5% 500VDC CER 0+-30	28480	0160-2258
A4A4C97	0160-0134	1		CAPACITOR-FXD 220PF +-5% 300VDC MICA	28480	0160-0134
A4A4C98	0160-4832	4		CAPACITOR-FXD .01UF +-10% 100VDC CER	28480	0160-4832
A4A4CR1	1901-0047	8	11	DIODE-SWITCHING 20V 75MA 10NS	28480	1901-0047
A4A4CR2				NOT ASSIGNED		
A4A4CR3	1901-0047	8		DIODE-SWITCHING 20V 75MA 10NS	28480	1901-0047
A4A4CR4	1901-1070	9	6	DIODE-PIN 110V	28480	1901-1070
A4A4CR5	1901-1070	9		DIODE-PIN 110V	28480	1901-1070
A4A4CR6	1901-0535	9	8	DIODE-SM SIG SCHOTTKY	28480	1901-0535
A4A4CR7	1901-0047	8		DIODE-SWITCHING 20V 75MA 10NS	28480	1901-0047
A4A4CR8	1901-0535	9		DIODE-SM SIG SCHOTTKY	28480	1901-0535
A4A4CR9				NOT ASSIGNED		
A4A4CR10	1901-0047	8		DIODE-SWITCHING 20V 75MA 10NS	28480	1901-0047
A4A4CR11				NOT ASSIGNED		
A4A4CR12	1901-0047	8		DIODE-SWITCHING 20V 75MA 10NS	28480	1901-0047
A4A4CR13	1901-1070	9		DIODE-PIN 110V	28480	1901-1070
A4A4CR14	1901-0535	9		DIODE-SM SIG SCHOTTKY	28480	1901-0535
A4A4CR15	1901-0047	8		DIODE-SWITCHING 20V 75MA 10NS	28480	1901-0047
A4A4CR16	1901-0535	9		DIODE-SM SIG SCHOTTKY	28480	1901-0535
A4A4CR17				NOT ASSIGNED		
A4A4CR18	1901-0047	8		DIODE-SWITCHING 20V 75MA 10NS	28480	1901-0047
A4A4CR19	1901-1070	9		DIODE-PIN 110V	28480	1901-1070
A4A4CR20	1901-0047	8		DIODE-SWITCHING 20V 75MA 10NS	28480	1901-0047
A4A4CR21	1901-1070	9		DIODE-PIN 110V	28480	1901-1070
A4A4CR22	1901-0535	9		DIODE-SM SIG SCHOTTKY	28480	1901-0535
A4A4CR23	1901-0047	8		DIODE-SWITCHING 20V 75MA 10NS	28480	1901-0047
A4A4CR24	1901-0535	9		DIODE-SM SIG SCHOTTKY	28480	1901-0535
A4A4CR25	1901-1070	9		DIODE-PIN 110V	28480	1901-1070
A4A4CR26				NOT ASSIGNED		
A4A4CR27	1901-0535	9		DIODE-SM SIG SCHOTTKY	28480	1901-0535
A4A4CR28	1901-0535	9		DIODE-SM SIG SCHOTTKY	28480	1901-0535
A4A4CR29	1901-0047	8		DIODE-SWITCHING 20V 75MA 10NS	28480	1901-0047
A4A4CR30	1901-0047	8		DIODE-SWITCHING 20V 75MA 10NS	28480	1901-0047
A4A4E1	9170-0029	3	16	CORE-SHIELDING BEAD	28480	9170-0029
A4A4E2	9170-0029	3		CORE-SHIELDING BEAD	28480	9170-0029
A4A4E3	9170-0029	3		CORE-SHIELDING BEAD	28480	9170-0029
A4A4E4	9170-0029	3		CORE-SHIELDING BEAD	28480	9170-0029
A4A4E5	9170-0029	3		CORE-SHIELDING BEAD	28480	9170-0029
A4A4E6	9170-0029	3		CORE-SHIELDING BEAD	28480	9170-0029
A4A4E7	9170-0029	3		CORE-SHIELDING BEAD	28480	9170-0029
A4A4E8	9170-0029	3		CORE-SHIELDING BEAD	28480	9170-0029
A4A4E9	9170-0029	3		CORE-SHIELDING BEAD	28480	9170-0029
A4A4E10	9170-0029	3		CORE-SHIELDING BEAD	28480	9170-0029
A4A4E11	9170-0029	3		CORE-SHIELDING BEAD	28480	9170-0029
A4A4E12	9170-0029	3		CORE-SHIELDING BEAD	28480	9170-0029
A4A4E13	9170-0029	3		CORE-SHIELDING BEAD	28480	9170-0029
A4A4E14	9170-0029	3		CORE-SHIELDING BEAD	28480	9170-0029
A4A4E15	9170-0029	3		CORE-SHIELDING BEAD	28480	9170-0029
A4A4E16	9170-0029	3		CORE-SHIELDING BEAD	28480	9170-0029

TABLE 1. A4A4, REPLACEABLE PARTS (3 OF 4)

Reference Designation	HP Part Number	C D	Qty	Description	Mfr Code	Mfr Part Number
A4A4L1	9100-1641	0	1	INDUCTOR RF-CH-MLD 240UH 5% .166DX.385LG	28480	9100-1641
A4A4L2	9140-0114	4	3	INDUCTOR RF-CH-MLD 10UH 10% .166DX.385LG	28480	9140-0114
A4A4L3	9140-0178	0	2	INDUCTOR RF-CH-MLD 12UH 10% .166DX.385LG	28480	9140-0178
A4A4L4	9100-2813	0	2	INDUCTOR 400NH 10% .312DX1.016LG Q=150	28480	9100-2813
A4A4L5	9140-0098	3	3	INDUCTOR RF-CH-MLD 2.2UH 10%	28480	9140-0098
A4A4L6	9100-1620	5	3	INDUCTOR RF-CH-MLD 15UH 10% .166DX.385LG	28480	9100-1620
A4A4L7	9140-0453	4	2	INDUCTOR RF-CH-MLD 6.8UH 5% .166DX.385LG	28480	9140-0453
A4A4L8	9140-0098	3		INDUCTOR RF-CH-MLD 2.2UH 10%	28480	9140-0098
A4A4L9	9100-1618	1	7	INDUCTOR RF-CH-MLD 5.6UH 10%	28480	9100-1618
A4A4L10	9100-1618	1		INDUCTOR RF-CH-MLD 5.6UH 10%	28480	9100-1618
A4A4L11				NOT ASSIGNED		
A4A4L12	9100-1618	1		INDUCTOR RF-CH-MLD 5.6UH 10%	28480	9100-1618
A4A4L13	9100-1620	5		INDUCTOR RF-CH-MLD 15UH 10% .166DX.385LG	28480	9100-1620
A4A4L14	9100-1618	1		INDUCTOR RF-CH-MLD 5.6UH 10%	28480	9100-1618
A4A4L15	9140-0114	4		INDUCTOR RF-CH-MLD 10UH 10% .166DX.385LG	28480	9140-0114
A4A4L16	9140-0114	4		INDUCTOR RF-CH-MLD 10UH 10% .166DX.385LG	28480	9140-0114
A4A4L17	9140-0178	0		INDUCTOR RF-CH-MLD 12UH 10% .166DX.385LG	28480	9140-0178
A4A4L18	9100-2813	0		INDUCTOR 400NH 10% .312DX1.016LG Q=150	28480	9100-2813
A4A4L19	9140-0098	3		INDUCTOR RF-CH-MLD 2.2UH 10%	28480	9140-0098
A4A4L20	9140-0453	4		INDUCTOR RF-CH-MLD 6.8UH 5% .166DX.385LG	28480	9140-0453
A4A4L21				NOT ASSIGNED		
A4A4L22	9100-1620	5		INDUCTOR RF-CH-MLD 15UH 10% .166DX.385LG	28480	9100-1620
A4A4L23				NOT ASSIGNED		
A4A4L24	9100-1618	1		INDUCTOR RF-CH-MLD 5.6UH 10%	28480	9100-1618
A4A4L25	9100-1618	1		INDUCTOR RF-CH-MLD 5.6UH 10%	28480	9100-1618
A4A4L26	9100-1618	1		INDUCTOR RF-CH-MLD 5.6UH 10%	28480	9100-1618
A4A4L27	9140-0112	2	3	INDUCTOR RF-CH-MLD 4.7UH 10%	28480	9140-0112
A4A4L28	9140-0112	2		INDUCTOR RF-CH-MLD 4.7UH 10%	28480	9140-0112
A4A4L29	9140-0112	2		INDUCTOR RF-CH-MLD 4.7UH 10%	28480	9140-0112
A4A4Q1	1855-0267	5	3	TRANSISTOR J-FET N-CHAN D-MODE TO-92 SI	28480	1855-0267
A4A4Q2	1853-0007	7	7	TRANSISTOR PNP 2N3251 SI TO-18 PD=360MW	04713	2N3251
A4A4Q3	1853-0007	7		TRANSISTOR PNP 2N3251 SI TO-18 PD=360MW	04713	2N3251
A4A4Q4	1853-0007	7		TRANSISTOR PNP 2N3251 SI TO-18 PD=360MW	04713	2N3251
A4A4Q5	1853-0007	7		TRANSISTOR PNP 2N3251 SI TO-18 PD=360MW	04713	2N3251
A4A4Q6	1853-0007	7		TRANSISTOR PNP 2N3251 SI TO-18 PD=360MW	04713	2N3251
A4A4Q7	1853-0007	7		TRANSISTOR PNP 2N3251 SI TO-18 PD=360MW	04713	2N3251
A4A4Q8	1854-0404	0	3	TRANSISTOR NPN SI TO-18 PD=360MW	28480	1854-0404
A4A4Q9	1853-0007	7		TRANSISTOR PNP 2N3251 SI TO-18 PD=360MW	04713	2N3251
A4A4Q10	1854-0404	0		TRANSISTOR NPN SI TO-18 PD=360MW	28480	1854-0404
A4A4Q11	1855-0267	5		TRANSISTOR J-FET N-CHAN D-MODE TO-92 SI	28480	1855-0267
A4A4Q12	1854-0404	0		TRANSISTOR NPN SI TO-18 PD=360MW	28480	1854-0404
A4A4Q13	1855-0267	5		TRANSISTOR J-FET N-CHAN D-MODE TO-92 SI	28480	1855-0267
A4A4Q14	1854-0345	9	1	TRANSISTOR NPN 2N5179 SI TO-72 PD=200MW	04713	2N5179
A4A4R1	0757-0441	8		RESISTOR 8.25K 1% .125W F TC=0+-100	24546	C4-1/8-T0-8251-F
A4A4R2	0698-3431	6	2	RESISTOR 23.7 1% .125W F TC=0+-100	03888	PME55-1/8-T0-23R7-F
A4A4R3*	0698-8819	4	1	RESISTOR 3.83 1% .125W F TC=0+-100	28480	0698-8819
A4A4R4	0757-0401	0	4	RESISTOR 100 1% .125W F TC=0+-100	24546	C4-1/8-T0-101-F
A4A4R5	0757-0442	9	5	RESISTOR 10K 1% .125W F TC=0+-100	24546	C4-1/8-T0-1002-F
A4A4R6	0757-0397	3	1	RESISTOR 68.1 1% .125W F TC=0+-100	24546	C4-1/8-T0-68R1-F
A4A4R7	0698-3155	1	3	RESISTOR 4.64K 1% .125W F TC=0+-100	24546	C4-1/8-T0-4641-F
A4A4R8	0757-0280	3	7	RESISTOR 1K 1% .125W F TC=0+-100	24546	C4-1/8-T0-1001-F
A4A4R9	0757-0438	3	6	RESISTOR 5.11K 1% .125W F TC=0+-100	24546	C4-1/8-T0-5111-F
A4A4R10	0698-3441	8	3	RESISTOR 215 1% .125W F TC=0+-100	24546	C4-1/8-T0-215R-F
A4A4R11	0757-0443	0	3	RESISTOR 11K 1% .125W F TC=0+-100	24546	C4-1/8-T0-1102-F
A4A4R12	0698-0082	7	4	RESISTOR 464 1% .125W F TC=0+-100	24546	C4-1/8-T0-4640-F
A4A4R13	0698-3444	1	3	RESISTOR 316 1% .125W F TC=0+-100	24546	C4-1/8-T0-316R-F
A4A4R14	0698-3442	9	3	RESISTOR 237 1% .125W F TC=0+-100	24546	C4-1/8-T0-237R-F
A4A4R15	0757-0279	0	3	RESISTOR 3.16K 1% .125W F TC=0+-100	24546	C4-1/8-T0-3161-F
A4A4R16*	0757-0200	7	2	RESISTOR 5.62K 1% .125W F TC=0+-100	24546	C4-1/8-T0-5621-F
A4A4R17	0698-3156	2	4	RESISTOR 14.7K 1% .125W F TC=0+-100	24546	C4-1/8-T0-1472-F
A4A4R18	0698-3156	2		RESISTOR 14.7K 1% .125W F TC=0+-100	24546	C4-1/8-T0-1472-F
A4A4R19	0757-0280	3		RESISTOR 1K 1% .125W F TC=0+-100	24546	C4-1/8-T0-1001-F
A4A4R20*	0757-0441	8	3	RESISTOR 8.25K 1% .125W F TC=0+-100	24546	C4-1/8-T0-8251-F
A4A4R21	0757-0290	5	6	RESISTOR 6.19K 1% .125W F TC=0+-100	19701	MF4C1/8-T0-6191-F
A4A4R22	0757-0290	5		RESISTOR 6.19K 1% .125W F TC=0+-100	19701	MF4C1/8-T0-6191-F
A4A4R23				NOT ASSIGNED		
A4A4R24	0698-3431	6		RESISTOR 23.7 1% .125W F TC=0+-100	03888	PME55-1/8-T0-23R7-F
A4A4R25	0757-0401	0		RESISTOR 100 1% .125W F TC=0+-100	24546	C4-1/8-T0-101-F
A4A4R26	0757-0280	3		RESISTOR 1K 1% .125W F TC=0+-100	24546	C4-1/8-T0-1001-F
A4A4R27	0698-3155	1		RESISTOR 4.64K 1% .125W F TC=0+-100	24546	C4-1/8-T0-4641-F
A4A4R28	0698-0082	7		RESISTOR 464 1% .125W F TC=0+-100	24546	C4-1/8-T0-4640-F
A4A4R29	0757-0443	0		RESISTOR 11K 1% .125W F TC=0+-100	24546	C4-1/8-T0-1102-F
A4A4R30	0757-0438	3		RESISTOR 5.11K 1% .125W F TC=0+-100	24546	C4-1/8-T0-5111-F
A4A4R31	0698-3441	8		RESISTOR 215 1% .125W F TC=0+-100	24546	C4-1/8-T0-215R-F
A4A4R32	0698-3444	1		RESISTOR 316 1% .125W F TC=0+-100	24546	C4-1/8-T0-316R-F
A4A4R33	0698-3442	9		RESISTOR 237 1% .125W F TC=0+-100	24546	C4-1/8-T0-237R-F
A4A4R34	0757-0279	0		RESISTOR 3.16K 1% .125W F TC=0+-100	24546	C4-1/8-T0-3161-F
A4A4R35*	0757-0418	9	1	RESISTOR 619 1% .125W F TC=0+-100	24546	C4-1/8-T0-619R-F

*Indicates factory selected value

TABLE 1. A4A4, REPLACEABLE PARTS (4 OF 4)

Reference Designation	HP Part Number	C D	Qty	Description	Mfr Code	Mfr Part Number
A4A4R36				NOT ASSIGNED		
A4A4R37	0757-0442	9		RESISTOR 10K 1% .125W F TC=0+-100	24546	C4-1/8-T0-1002-F
A4A4R38				NOT ASSIGNED		
A4A4R39	0757-0280	3		RESISTOR 1K 1% .125W F TC=0+-100	24546	C4-1/8-T0-1001-F
A4A4R40*	0757-0441	8		RESISTOR 8.25K 1% .125W F TC=0+-100	24546	C4-1/8-T0-8251-F
A4A4R41	0757-0290	5		RESISTOR 6.19K 1% .125W F TC=0+-100	19701	MF4C1/8-T0-6191-F
A4A4R42				NOT ASSIGNED		
A4A4R43	2100-3163	9	1	RESISTOR-TRMR 1M 20% C SIDE-ADJ 17-TRN	02111	43P105
A4A4R44				NOT ASSIGNED		
A4A4R45*	0757-0346	2	1	RESISTOR 10 1% .125W F TC=0+-100	24546	C4-1/8-T0-10R0-F
A4A4R46	0757-0280	3		RESISTOR 1K 1% .125W F TC=0+-100	24546	C4-1/8-T0-1001-F
A4A4R47				NOT ASSIGNED		
A4A4R48	0757-0290	5		RESISTOR 6.19K 1% .125W F TC=0+-100	19701	MF4C1/8-T0-6191-F
A4A4R49	2100-3052	4	1	RESISTOR-TRMR 50 10% C SIDE-ADJ 17-TRN	02111	43P500
A4A4R50	0757-0401	0		RESISTOR 100 1% .125W F TC=0+-100	24546	C4-1/8-T0-101-F
A4A4R51	0757-0280	3		RESISTOR 1K 1% .125W F TC=0+-100	24546	C4-1/8-T0-1001-F
A4A4R52	0698-3155	1		RESISTOR 4.64K 1% .125W F TC=0+-100	24546	C4-1/8-T0-4641-F
A4A4R53	0698-0082	7		RESISTOR 464 1% .125W F TC=0+-100	24546	C4-1/8-T0-4640-F
A4A4R54	0757-0443	0		RESISTOR 11K 1% .125W F TC=0+-100	24546	C4-1/8-T0-1102-F
A4A4R55	0757-0438	3		RESISTOR 5.11K 1% .125W F TC=0+-100	24546	C4-1/8-T0-5111-F
A4A4R56	0698-3441	8		RESISTOR 215 1% .125W F TC=0+-100	24546	C4-1/8-T0-215R-F
A4A4R57	0698-3444	1		RESISTOR 316 1% .125W F TC=0+-100	24546	C4-1/8-T0-316R-F
A4A4R58	0698-3442	9		RESISTOR 237 1% .125W F TC=0+-100	24546	C4-1/8-T0-237R-F
A4A4R59	0757-0279	0		RESISTOR 3.16K 1% .125W F TC=0+-100	24546	C4-1/8-T0-3161-F
A4A4R60*	0757-0200	7		RESISTOR 5.62K 1% .125W F TC=0+-100	24546	C4-1/8-T0-5621-F
A4A4R61	0698-3156	2		RESISTOR 14.7K 1% .125W F TC=0+-100	24546	C4-1/8-T0-1472-F
A4A4R62	0698-3156	2		RESISTOR 14.7K 1% .125W F TC=0+-100	24546	C4-1/8-T0-1472-F
A4A4R63	0757-0280	3		RESISTOR 1K 1% .125W F TC=0+-100	24546	C4-1/8-T0-1001-F
A4A4R64*	0757-0288	1	1	RESISTOR 9.09K 1% .125W F TC=0+-100	19701	MF4C1/8-T0-9091-F
A4A4R65*	0757-0317	7	1	RESISTOR 1.33K 1% .125W F TC=0+-100	24546	C4-1/8-T0-1331-F
A4A4R66	0757-0290	5		RESISTOR 6.19K 1% .125W F TC=0+-100	19701	MF4C1/8-T0-6191-F
A4A4R67	0757-0290	5		RESISTOR 6.19K 1% .125W F TC=0+-100	19701	MF4C1/8-T0-6191-F
A4A4R68	0757-0417	8	1	RESISTOR 562 1% .125W F TC=0+-100	24546	C4-1/8-T0-562R-F
A4A4R69				NOT ASSIGNED		
A4A4R70	0698-3440	7	1	RESISTOR 196 1% .125W F TC=0+-100	24546	C4-1/8-T0-196R-F
A4A4R71				NOT ASSIGNED		
A4A4R72	0698-3438	3	1	RESISTOR 147 1% .125W F TC=0+-100	24546	C4-1/8-T0-147R-F
A4A4R73	0698-0082	7		RESISTOR 464 1% .125W F TC=0+-100	24546	C4-1/8-T0-4640-F
A4A4R74	0757-0430	3		RESISTOR 5.11K 1% .125W F TC=0+-100	24546	C4-1/8-T0-5111-F
A4A4R75	0757-0438	3		RESISTOR 5.11K 1% .125W F TC=0+-100	24546	C4-1/8-T0-5111-F
A4A4R76	0757-0438	3		RESISTOR 5.11K 1% .125W F TC=0+-100	24546	C4-1/8-T0-5111-F
A4A4R77-						
A4A4R81				NOT ASSIGNED		
A4A4R82	0757-0401	0		RESISTOR 100 1% .125W F TC=0+-100	24546	C4-1/8-T0-101-F
A4A4R83	0757-0442	9		RESISTOR 10K 1% .125W F TC=0+-100	24546	C4-1/8-T0-1002-F
A4A4R84	0757-0442	9		RESISTOR 10K 1% .125W F TC=0+-100	24546	C4-1/8-T0-1002-F
A4A4R85	0757-0442	9		RESISTOR 10K 1% .125W F TC=0+-100	24546	C4-1/8-T0-1002-F
A4A4R86				NOT ASSIGNED		
A4A4R87				NOT ASSIGNED		
A4A4R88	0698-3154	0	3	RESISTOR 4.22K 1% .125W F TC=0+-100	24546	C4-1/8-T0-4221-F
A4A4R89	0698-3154	0		RESISTOR 4.22K 1% .125W F TC=0+-100	24546	C4-1/8-T0-4221-F
A4A4R90	0698-3154	0		RESISTOR 4.22K 1% .125W F TC=0+-100	24546	C4-1/8-T0-4221-F
A4A4R91	0757-0180	2	3	RESISTOR 31.6 1% .125W F TC=0+-100	28480	0757-0180
A4A4R92	0757-0180	2		RESISTOR 31.6 1% .125W F TC=0+-100	28480	0757-0180
A4A4R93	0757-0180	2		RESISTOR 31.6 1% .125W F TC=0+-100	28480	0757-0180
A4A4R94*	0757-0465	6	2	RESISTOR 100K 1% .125W F TC=0+-100	24546	C4-1/8-T0-1003-F
A4A4R95	0757-0465	6		RESISTOR 100K 1% .125W F TC=0+-100	24546	C4-1/8-T0-1003-F
A4A4R96	0757-0420	3	1	RESISTOR 750 1% .125W F TC=0+-100	24546	C4-1/8-T0-751-F
A4A4TP1	0360-1788	7	6	CONNECTOR-SGL CONT PIN .045-IN-BSC-SZ SQ	28480	0360-1788
A4A4TP2	0360-1788	7		CONNECTOR-SGL CONT PIN .045-IN-BSC-SZ SQ	28480	0360-1788
A4A4TP3	1251-0600	0	2	CONNECTOR-SGL CONT PIN 1.14-MM-BSC-SZ SQ	28480	1251-0600
A4A4TP4	0360-1788	7		CONNECTOR-SGL CONT PIN .045-IN-BSC-SZ SQ	28480	0360-1788
A4A4TP5	0360-1788	7		CONNECTOR-SGL CONT PIN .045-IN-BSC-SZ SQ	28480	0360-1788
A4A4TP6	0360-1788	7		CONNECTOR-SGL CONT PIN .045-IN-BSC-SZ SQ	28480	0360-1788
A4A4TP7	0360-1788	7		CONNECTOR-SGL CONT PIN .045-IN-BSC-SZ SQ	28480	0360-1788
A4A4TP8	1251-0600	0		CONNECTOR-SGL CONT PIN 1.14-MM-BSC-SZ SQ	28480	1251-0600
A4A4VR1	1902-0048	1	1	DIODE-ZNR 6.81V 5% DO-35 PD=.4W	28480	1902-0048
A4A4Y1	0410-1029	6	3	CRYSTAL-QUARTZ MATCHED SET OF 6	28480	0410-1029
A4A4Y2	0410-1029	6		CRYSTAL-QUARTZ MATCHED SET OF 6	28480	0410-1029
A4A4Y3	0410-1029	6		CRYSTAL-QUARTZ MATCHED SET OF 6 SET OF SIX INCLUDES A4A4Y1-3, A4A6A1Y1 AND A4A8Y1-2	28480	0410-1029
				MISCELLANEOUS PARTS		
	6960-0016	0	2	PLUG-HOLE TR-HD FOR .125-D-HOLE NYL	28480	6960-0016
	05662-20036	8	1	CVR BW FILTER	28480	05662-20036

*Indicates factory selected value

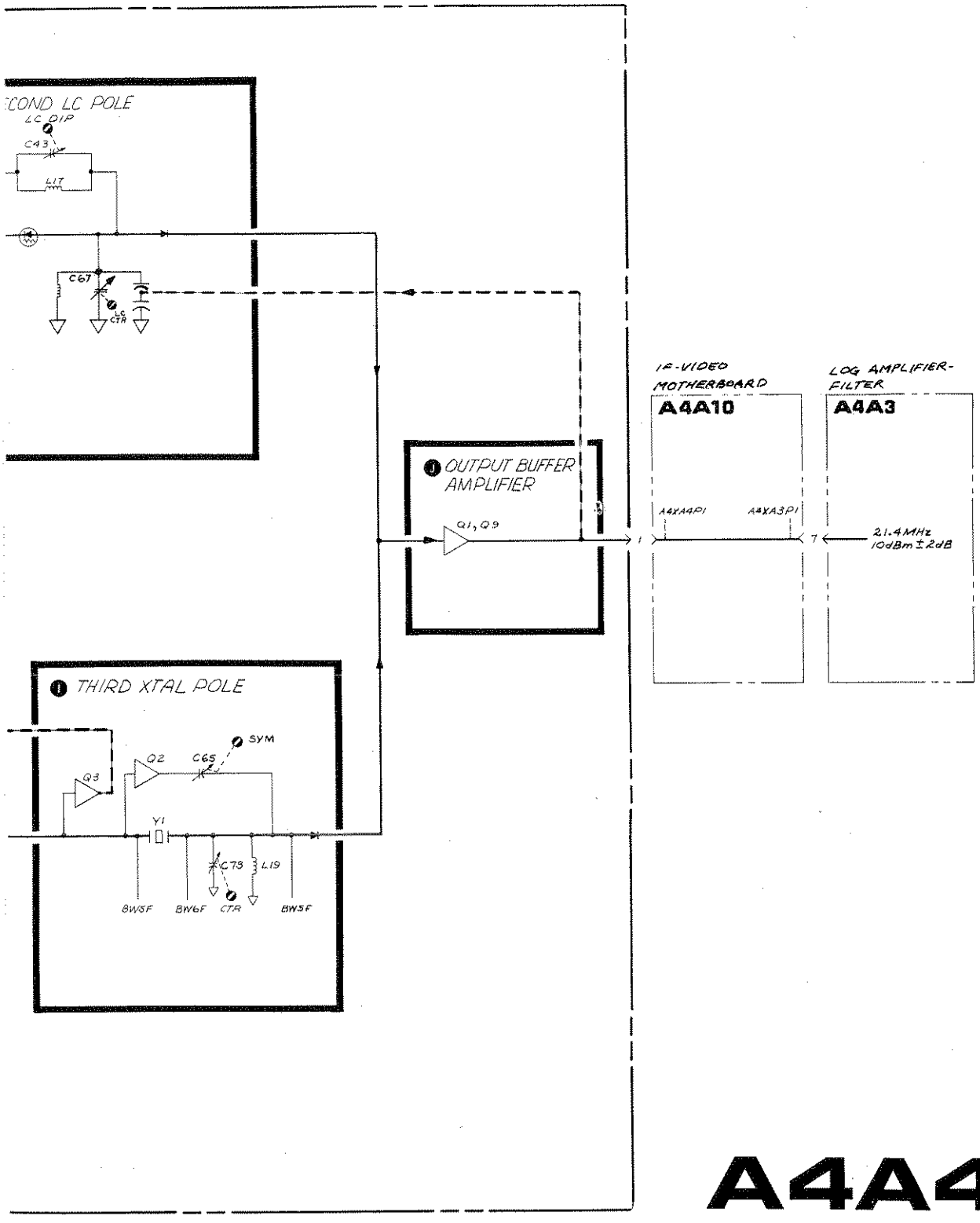

A4A4

FIGURE 3. A4A4 BANDWIDTH FILTER, BLOCK DIAGRAM

IF VIDEO MOTHERBOARD
A4A10

A4A4 BANDWIDTH FILTER

A10dB GAIN BUFFER AMPLIFIER

FIRST LC POLE

BUFFER AMPLIFIER

SECOND LC POLE

BUFFER AMPLIFIER

FIRST XTAL POLE

SECOND XTAL POLE

THIRD XTAL POLE

OUTPUT BUFFER AMPLIFIER

BANDWIDTH CONTROL LINES

IF-VIDEO MOTHERBOARD
A4A10

LOG AMP FILTER
A4A

A4

FIGURE 3. A4A4 BANDWIDTH FILTER

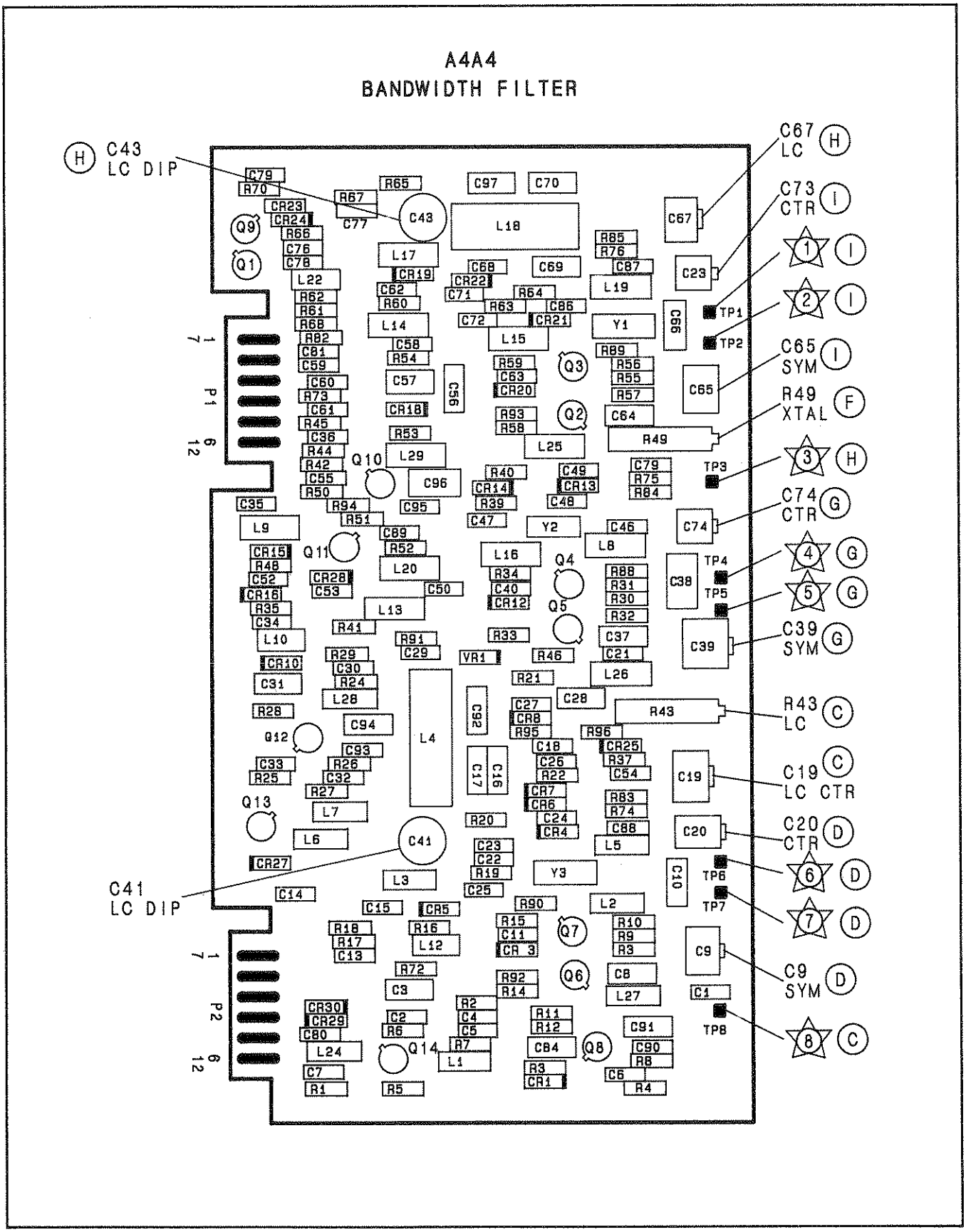

FIGURE 4. A4A4 BANDWIDTH FILTER, COMPONENT LOCATIONS

INAL	TO/FROM	FUNCTION BLOCK
MHz	A4A3, P1-7	J K
	A4A9, P1-4	K B
		K K
	A4A9, P1-21	K B
	A4A5, P1-5	K K
	A4A9, P1-12	K B

INAL	TO/FROM	FUNCTION BLOCK
		K K
		K K
		K K
		K K
		K K
MHz	A4A5, P2-10	K A

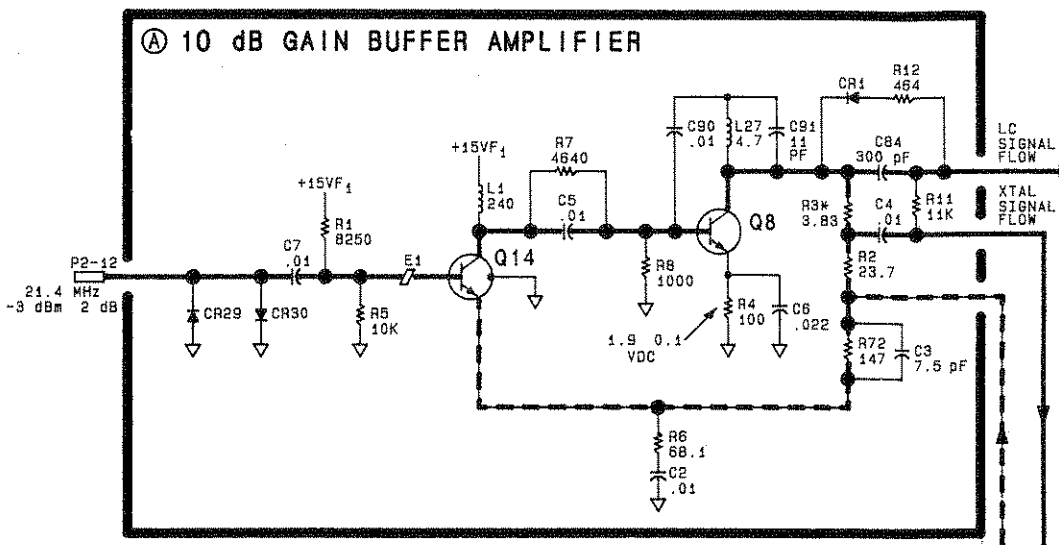

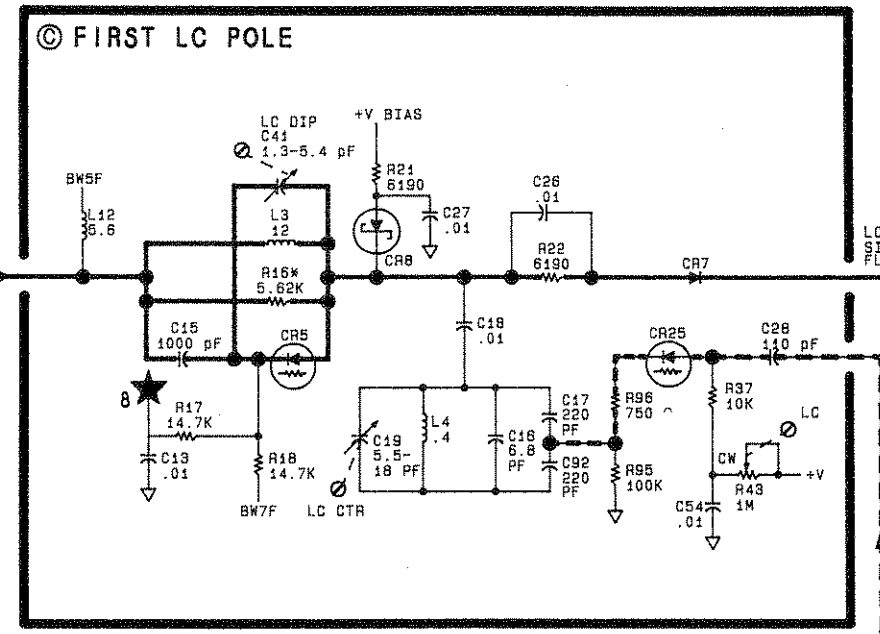

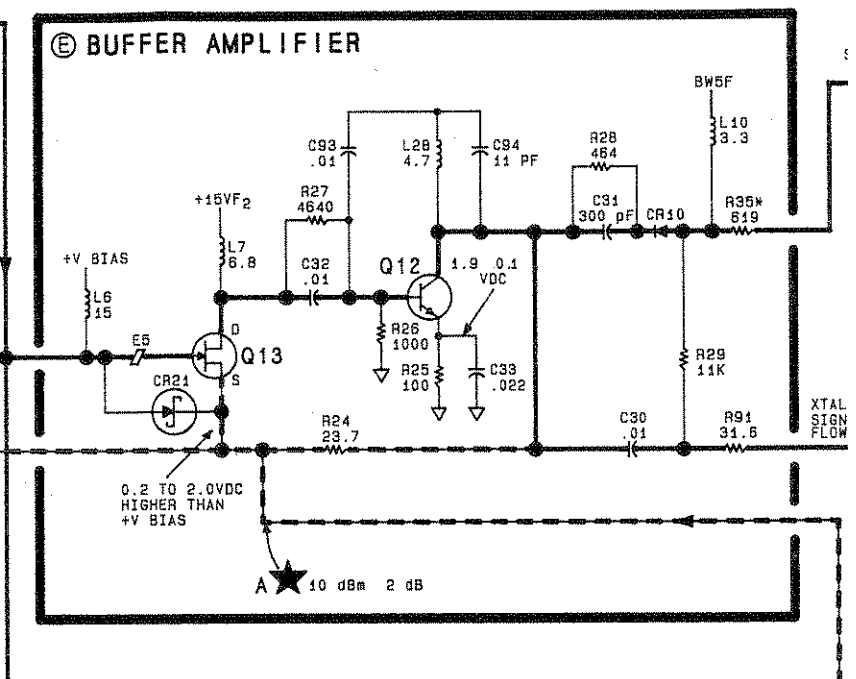

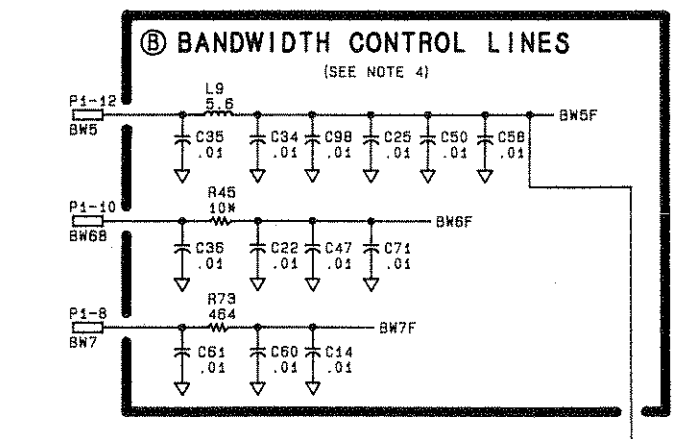

REFIX: 2403A

AY SECTION

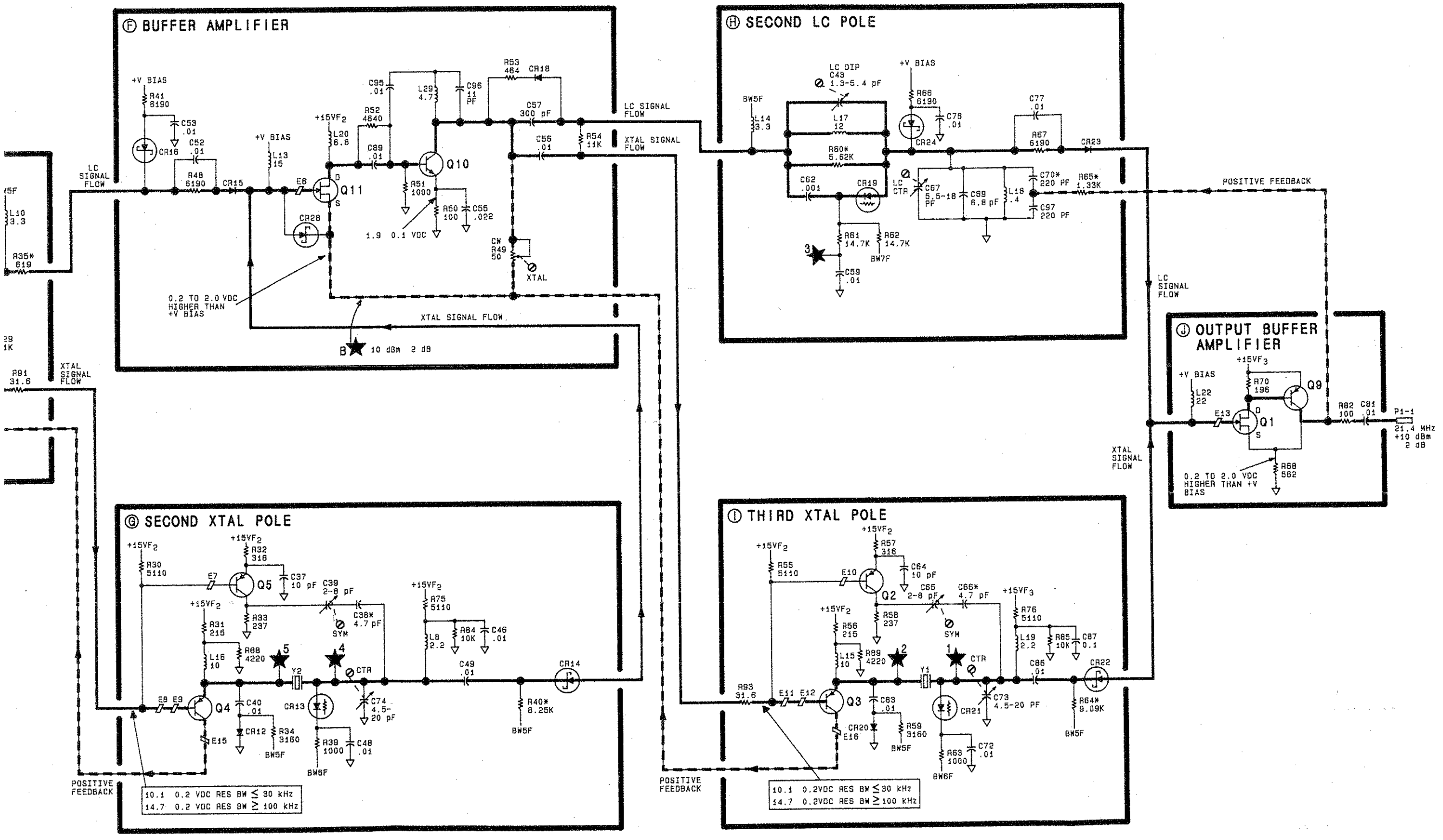

NOTES:

1. REFERENCE DESIGNATORS WITHIN THIS ASSEMBLY ARE ABBREVIATED. FOR COMPLETE REFERENCE DESIGNATION, PREFIX ABBREVIATION WITH ASSEMBLY DESIGNATION.
2. UNLESS OTHERWISE INDICATED:
   RESISTANCE IS IN OHMS (Ω)
   CAPACITANCE IS IN MICROFARADS (μF)
   INDUCTANCE IS IN MICROHENRIES (μH)
3. ASTERISK (*) DENOTES A FACTORY SELECTED COMPONENT; TYPICAL VALUE IS SHOWN. REFER TO SECTION V FOR RANGE OF VALUES.
4. MNEMONIC TABLE:

MNEMONIC	DESCRIPTION
BW5	BANDWIDTH 5
BW7	BANDWIDTH 7 (LC MODE)
BW68	BANDWIDTH 68 (XTAL MODE)

5. UNLESS OTHERWISE NOTED, INSTRUMENT SETTINGS ARE AS FOLLOWS:

INSTRUMENT PRESET	
CENTER FREQUENCY	CAL. OUT FREQ
FREQUENCY SPAN	0 Hz
ATTENUATION	0 dB
RESOLUTION BANDWIDTH	3 kHz

6. TABLE OF RESOLUTION BANDWIDTH CONTROL LINE VOLTAGES.

RESOLUTION BANDWIDTH	TYPICAL VALUES		
	BW5	BW68	BW7
3 MHz	+14.8	-14.0	+ 9.7
1 MHz	+14.8	-14.0	+13.1
300 kHz	+14.8	-14.0	+14.1
100 kHz	+14.8	-14.0	+14.5
30 kHz	-.6	+14.3	+14.3
10 kHz	-.6	+9.3	+14.3
3 kHz	-.6	+9.0	+14.3
1 kHz AND NARROWER	-.6	+14.3	+14.3

7. UNLESS OTHERWISE INDICATED: SIGNALS ENTER AT LEFT SIDE AND EXIT AT RIGHT SIDE OF FUNCTION BLOCKS.

A4A4

FIGURE 5. A4A4 BANDWIDTH FILTER, SCHEMATIC DIAGRAM

A4A5 STEP GAIN, CIRCUIT DESCRIPTION

A4A5 Step Gain has three functions. It provides 65.9 dB of gain in discrete 0.1 dB steps (from −15.9 dB to +50 dB); it develops a nominal +10V bias supply; and it provides the 18.4 MHz LO frequency to A4A6A1 Up Converter and A4A6A2 Down Converter.

Step Gain 10 dB + Calibration (C)

This circuit is configured as a non-inverting operational amplifier. It provides a minimum of about 2 dB gain (adjustable by CAL potentiometer R33) and a maximum of about 12 dB (adjustable by 10 dB potentiometer R32). (See Figure 1.) The PIN diode CR5 functions as a variable resistor that has about 1K resistance at minimum and 70Ω of resistance at maximum gain. When the SG10 line is not sinking current (SG10 is off), the PIN resistance is controlled only by R33. When the SG10 line is grounded (SG10 is on), the gain is controlled primarily by R32. If the CAL potentiometer is adjusted, R32 must be adjusted also.

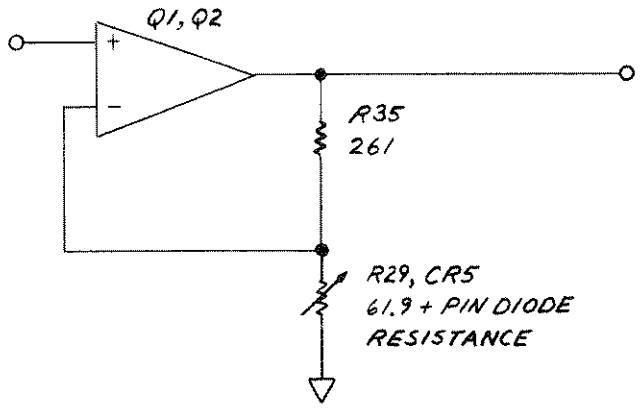

FIGURE 1. STEP GAIN 10 dB + CALIBRATION, EQUIVALENT CIRCUIT

Step Gain 20 dB-1 (D)
Step Gain 20 dB-2 (E)

This circuit is similar to the Step Gain 10 dB + Calibration circuit, except that the gain range is from 0 dB to 20 dB. PIN diode CR6 functions as both a switch and as a variable resistor. When the SG20-1 line is low, CR6 is turned on by current adjustable by 20 dB-1 potentiometer R44. More current through the PIN causes the PIN to have a lower resistance and the amplifier to have more gain. The Step Gain 20 dB-2 circuit is identical in operation to the Step Gain 20 dB-1 circuit.

A0.0 – A15.9 dB Attenuators (F)

These attenuators normally operate over the range of 0.0 dB to 9.9 dB except in the Error Correction function [SHIFT] [FREQUENCY SPAN], when they operate over the whole range of 0.0 dB to 15.9 dB. The first three attenuation stages, A8dB, A4dB, and A2dB, are emitter followers with a resistor divider on the output of each one. The dividers are switched in and out with diodes CR8, CR9, and CR10 to yield discrete steps of attenuation. The last attenuator is variable. Its range is adjusted by VR potentiometer R51. R51 sets the emitter voltage of Q16, which in turn determines how much current is sunk through PIN diode CR11 when resistors are switched in A4A9 IF Control. (See Figure 2.)

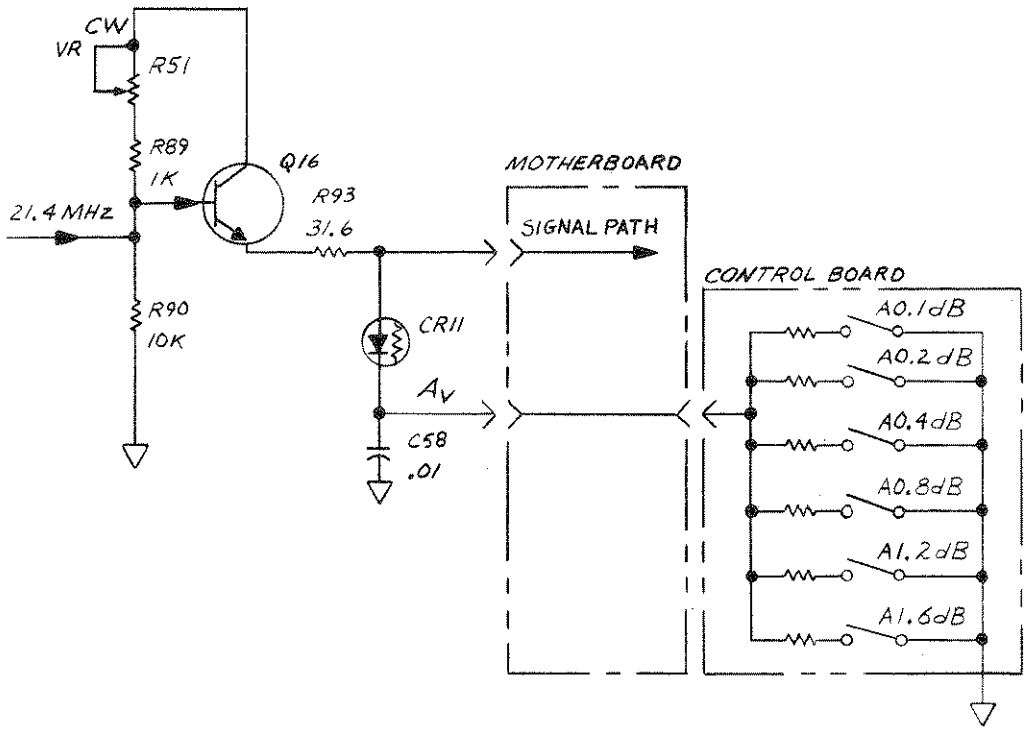

FIGURE 2. A0.0 – A15.9 dB ATTENUATORS, SIMPLIFIED SCHEMATIC

+ 10V Temperature Compensating Power Supply (G)

This supply (see Figure 3) compensates for the effect of temperature on PIN diodes used on the A4A5, A4A4, and A4A8 assemblies. Its nominal voltage is + 10V and its nominal temperature coefficient is + 35 mV/°C. The output voltage is derived from the following equation:

$$
\begin{aligned}
V_O &= V_{R4} + V_{fb} \\
&= (I_{R4})(R_4) + V_{fb} \\
&= \left(\frac{V_{R5}}{R_5}\right)(R_4) + V_{fb} \\
&\approx \left[\frac{(V_{fb} - V_{CR2})}{R_5}\right](R_4) + V_{fb}
\end{aligned}
$$

where: $V_{fb} \approx 3V$ (the voltage applied across CR2, CR3, CR4, and R5 at U1 pin 2) and is equal to the input voltage.

Using circuit values:

$$\approx \left[\frac{(3V - 1.8V)}{9.09K} \right] (51.1K) + 3V$$

$$\approx 9.75V$$

As temperature changes, the voltage drop across CR2, CR3, and CR4 changes. This results in a change in the current through the feedback resistor R4. Since $V_{out} = V_{fb} + V_{R4}$, the voltage developed across R4 changes the output of the supply. The change in V_{out} is directly proportional to the change in current through R4.

$$\Delta V_{out} = (\Delta I_{R4})(R_4)$$

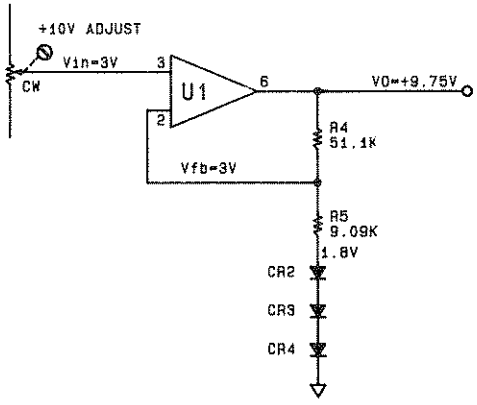

FIGURE 3. + 10V TEMPERATURE-COMPENSATING POWER SUPPLY, SIMPLIFIED SCHEMATIC

18.4 MHz Oscillator (A)

The 18.4 MHz Oscillator is basically a Colpitts oscillator with a crystal Y1 in the feedback path. A simplified schematic is shown in Figure 4.

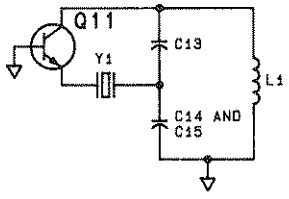

FIGURE 4. 18.4 MHz OSCILLATOR, EQUIVALENT CIRCUIT

If the crystal were replaced with a large capacitor, the circuit would oscillate at the resonant frequency of the parallel resonant circuit made up of L1, C13, C14, and C15. When the crystal is inserted, the feedback path is broken except at the series resonance of the crystal (18.4 MHz). The parallel combination of varactor CR1, temperature-compensating capacitor C7, and FREQ ZERO COARSE air-variable capacitor C10 are in series with the crystal and can pull it several kHz either side of 18.4 MHz.

The voltage output is determined by the current through R10* times the collector load. If the output is too low, R10* can be decreased in size.

The collector voltage is divided by C13, C14, and C15 and goes to the Buffer Amplifiers. The division ratio is:

$$\frac{\frac{1}{C_{15}}}{\frac{1}{C_{13}} + \frac{1}{C_{14}} + \frac{1}{C_{15}}} \approx 0.13$$

Buffer Amplifiers (B)

The Buffer Amplifiers are two almost identical amplifier circuits. The top amplifier on the schematic (Q10, Q8) provides the 18.4 MHz LO signal to A4A6A1 Up Converter, while the bottom amplifier (Q12, Q13) provides the signal to A4A6A2 Down Converter.

A4A5 STEP GAIN, TROUBLESHOOTING

Operation of the Step Gains and A0.0 to A15.9 Attenuator can be determined from the display by several easy tests.

The Step Gains are checked in the following way. Connect a 10 dB step attenuator between CAL OUTPUT and the input to the analyzer. Set this attenuator to 90 dB, press Instrument Preset, and key in the following:

[CENTER FREQUENCY] ..... equal to the CAL OUTPUT frequency
[FREQUENCY SPAN] ..... 0 Hz
[RES BW] ..... 1 kHz
[ATTEN] ..... 0 dB
[VIDEO BW] ..... 10 Hz
[SWEEP TIME] ..... 20 sec
[REFERENCE LEVEL] ..... −10 dBm

Press the [SINGLE] sweep key and then repeatedly press the DATA SWEEP [⇩] key. Figure 5 should be displayed. If one or more of the steps is missing, refer to Note 8 for the Step Gain truth table to determine which stage is faulty. 0V in the table indicates that a control line is active.

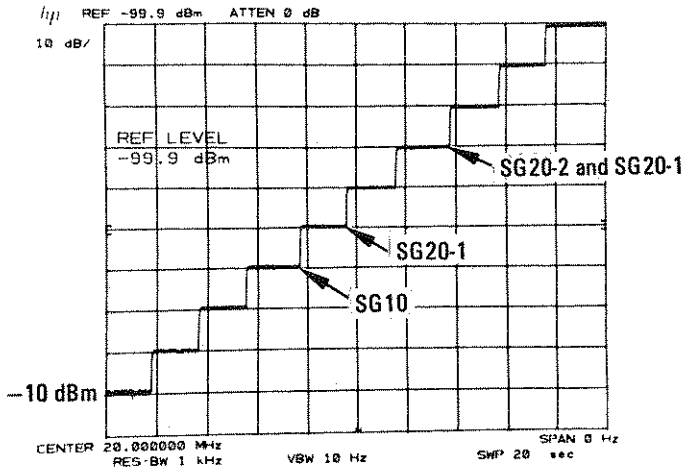

NOTE: Center Frequency readout will be 100.000 000 MHz for an HP 8566B.

FIGURE 5. 10 dB STEP GAIN TEST

If a component has been replaced, a simple calibration/diagnostic program exists. The calibration routine is started by connecting a cable from CAL OUTPUT to the input of the analyzer and then pressing [SHIFT] [FREQUENCY SPAN]. When this program has finished, press [SHIFT] [LINE] TRIGGER which will list the calibration data. (Refer to Figure 6.) Lines 19 through 26 give the step gain errors. Acceptable error is ±1 dB. Locations of the correction data are given in Table 1.

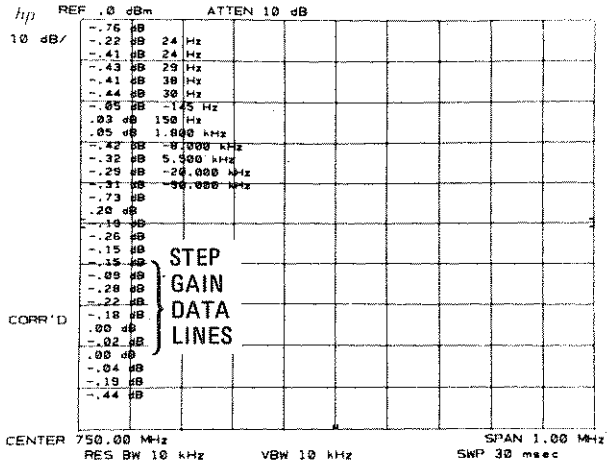

FIGURE 6. ERROR CORRECTION ROUTINE DATA

TABLE 1. LOCATIONS OF STEP GAIN CALIBRATION DATA

Reference Level (dBm)	−10	−20	−30	−40	−50	−60	−70	≤−80
Step Gain Control Line	A20 dB (A4A8 assembly)	A10 dB (A4A8 assembly)		SG10	SG20-1	SG10 SG20-1	SG20-1 SG20-2	SG10 SG20-1 SG20-2
Calibration Line	26	25	24	23	22	21	20	19

The A2dB, A4dB, and A8dB circuitry of the A0.0 to A15.9 Attenuator is activated by the following routine. First, connect a 1 dB step attenuator between CAL OUTPUT and the input to the analyzer. Set this attenuator to 10 dB, press Instrument Preset, and key in the following:

[CENTER FREQUENCY] ..... equal to the CAL OUTPUT frequency
[FREQUENCY SPAN] ..... 0 Hz
LOG SCALE [ENTER dB/DIV] ..... 1 dB
[SWEEP TIME] ..... 20 sec
[REFERENCE LEVEL] ..... −10 dBm

Press [SINGLE] sweep and repeatedly press the DATA STEP [⇩] key. The display should appear as in Figure 7. If every other step is missing, the AVdB control line is faulty. Check the A1dB circuitry on the A4A9 IF Control board to find the defective component. If only a few steps are missing, refer to the truth table in Note 9 to determine which function is not operating properly. 0V in the table indicates that a line is active.

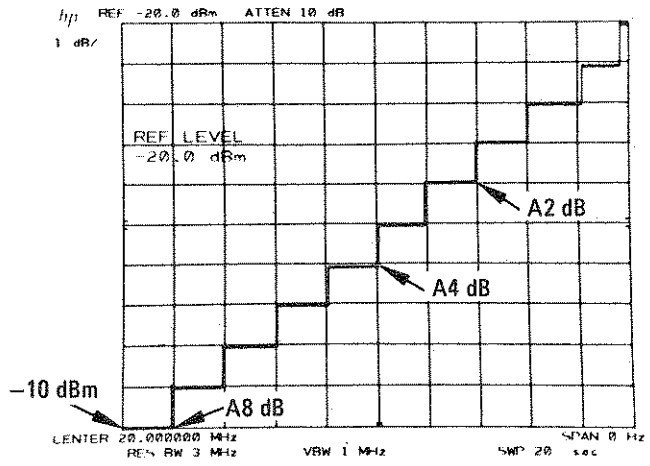

NOTE: Center Frequency readout will be 100.000 000 MHz for an HP 8566B.

FIGURE 7. 1 dB STEP GAIN TEST

Often several steps will appear to be slightly in error. Analysis of the truth table in Note 9 will indicate that no single stage could be faulty. This is caused by log fidelity error in the log amplifier circuitry. If accurate determination of the step size is necessary, IF substitution using a calibrated 1 dB step attenuator will be required.

Operation of the AVdB control line and the 0.1 – 1.9 dB section of the A0.0 – A15dB Attenuator on A4A9 IF Control can be tested with the following method. Press Instrument Preset and key in the following:

[CENTER FREQUENCY] ..... equal to the CAL OUTPUT frequency

[FREQUENCY SPAN] ..... 0 Hz

LIN SCALE

[Δ]

[SHIFT] [AUTO] (KSA)

[SWEEP TIME] ..... 20 sec

[VIDEO BW] ..... 3 kHz

[REFERENCE LEVEL] ..... – 8 dBm

Press the [SINGLE] sweep key and rotate the DATA control knob in a counterclockwise direction. A stepped display similar to Figure 8 should result. If the steps are not monotonic, the circuitry is faulty. The AVdB control line voltage for a – 10 dBm Reference Level will vary widely among instruments, although the ratio between the voltage for – 11.9 dBm and – 10 dBm will remain constant. During the above test, the voltage should vary approximately 8.5% from – 10 dBm to – 11.9 dBm.

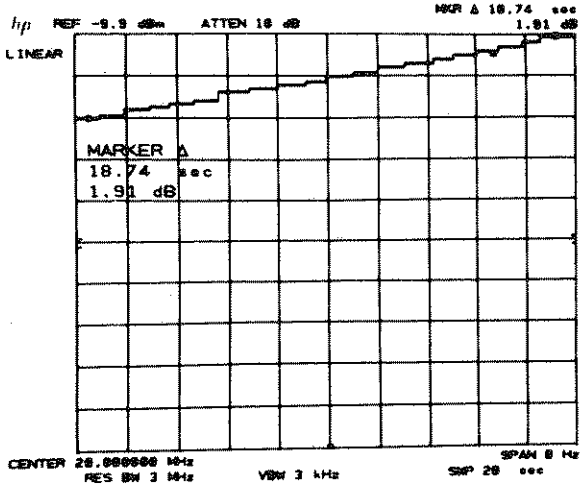

NOTE: Center Frequency readout will be 100.000 000 MHz for an HP 8566B.

FIGURE 8. 0.1 dB STEP GAIN TEST

The absolute step amplitudes can be determined with the MARKER Δ function. The reference steps are 0.00 dB, 0.90 dB, and 1.90 dB. In the Linear mode, the error should be less than ±0.12 dB. If these steps are not correct, or the display is not monotonic, refer to A4A9 IF Control Service Sheet for more troubleshooting information.

TABLE2. A4A5, REPLACEABLE PARTS (1 OF 3)

Reference Designation	HP Part Number	C D	Qty	Description	Mfr Code	Mfr Part Number
A4A5	85662-60139	6	1	BOARD ASSEMBLY, STEP GAIN	28480	85662-60139
A4A5C1	0160-4833	5	3	CAPACITOR-FXD .022UF +-10% 100VDC CER	28480	0160-4833
A4A5C2				NOT ASSIGNED		
A4A5C3	0160-4832	4	41	CAPACITOR-FXD .01UF +-10% 100VDC CER	28480	0160-4832
A4A5C4	0180-0197	8	2	CAPACITOR-FXD 2.2UF +-10% 20VDC TA	28480	0180-0197
A4A5C5	0160-4832	4		CAPACITOR-FXD .01UF +-10% 100VDC CER	28480	0160-4832
A4A5C6				NOT ASSIGNED		
A4A5C7				NOT ASSIGNED		
A4A5C8	0160-4832	4		CAPACITOR-FXD .01UF +-10% 100VDC CER	28480	0160-4832
A4A5C9	0160-2251	7	1	CAPACITOR-FXD 5.6PF +-.25PF 500VDC CER	28480	0160-2251
A4A5C10	0121-0493	3	1	CAPACITOR-V TRMR-AIR 1.7-11PF 175V	28480	0121-0493
A4A5C11	0160-0127	2	1	CAPACITOR-FXD 1UF +-20% 25VDC CER	28480	0160-0127
A4A5C12				NOT ASSIGNED		
A4A5C13	0160-0334	3	1	CAPACITOR-FXD 47PF +-.5PF 300VDC MICA	28480	0160-0334
A4A5C14	0160-2209	5	1	CAPACITOR-FXD 360PF +-5% 300VDC MICA	28480	0160-2209
A4A5C15	0160-3538	5	1	CAPACITOR-FXD 750PF +-5% 100VDC MICA	28480	0160-3538
A4A5C16				NOT ASSIGNED		
A4A5C17	0160-4832	4		CAPACITOR-FXD .01UF +-10% 100VDC CER	28480	0160-4832
A4A5C18	0160-4832	4		CAPACITOR-FXD .01UF +-10% 100VDC CER	28480	0160-4832
A4A5C19	0160-4832	4		CAPACITOR-FXD .01UF +-10% 100VDC CER	28480	0160-4832
A4A5C20	0160-4832	4		CAPACITOR-FXD .01UF +-10% 100VDC CER	28480	0160-4832
A4A5C21	0160-4832	4		CAPACITOR-FXD .01UF +-10% 100VDC CER	28480	0160-4832
A4A5C22	0160-4832	4		CAPACITOR-FXD .01UF +-10% 100VDC CER	28480	0160-4832
A4A5C23	0160-4832	4		CAPACITOR-FXD .01UF +-10% 100VDC CER	28480	0160-4832
A4A5C24	0160-4833	5		CAPACITOR-FXD .022UF +-10% 100VDC CER	28480	0160-4833
A4A5C25	0160-4833	5		CAPACITOR-FXD .022UF +-10% 100VDC CER	28480	0160-4833
A4A5C26	0160-4832	4		CAPACITOR-FXD .01UF +-10% 100VDC CER	28480	0160-4832
A4A5C27	0160-4832	4		CAPACITOR-FXD .01UF +-10% 100VDC CER	28480	0160-4832
A4A5C28	0160-4832	4		CAPACITOR-FXD .01UF +-10% 100VDC CER	28480	0160-4832
A4A5C29	0160-4832	4		CAPACITOR-FXD .01UF +-10% 100VDC CER	28480	0160-4832
A4A5C30				NOT ASSIGNED		
A4A5C31	0160-4832	4		CAPACITOR-FXD .01UF +-10% 100VDC CER	28480	0160-4832
A4A5C32	0160-2252	8	1	CAPACITOR-FXD 6.2PF +-.25PF 500VDC CER	28480	0160-2252
A4A5C33	0160-4832	4		CAPACITOR-FXD .01UF +-10% 100VDC CER	28480	0160-4832
A4A5C34	0160-4832	4		CAPACITOR-FXD .01UF +-10% 100VDC CER	28480	0160-4832
A4A5C35	0160-4832	4		CAPACITOR-FXD .01UF +-10% 100VDC CER	28480	0160-4832
A4A5C36	0160-4832	4		CAPACITOR-FXD .01UF +-10% 100VDC CER	28480	0160-4832
A4A5C37	0160-2244	8	2	CAPACITOR-FXD 3PF +-.25PF 500VDC CER	28480	0160-2244
A4A5C38	0160-4832	4		CAPACITOR-FXD .01UF +-10% 100VDC CER	28480	0160-4832
A4A5C39	0160-4832	4		CAPACITOR-FXD .01UF +-10% 100VDC CER	28480	0160-4832
A4A5C40	0160-4832	4		CAPACITOR-FXD .01UF +-10% 100VDC CER	28480	0160-4832
A4A5C41	0160-4832	4		CAPACITOR-FXD .01UF +-10% 100VDC CER	28480	0160-4832
A4A5C42	0160-4832	4		CAPACITOR-FXD .01UF +-10% 100VDC CER	28480	0160-4832
A4A5C43				NOT ASSIGNED		
A4A5C44	0160-4832	4		CAPACITOR-FXD .01UF +-10% 100VDC CER	28480	0160-4832
A4A5C45	0160-2244	8		CAPACITOR-FXD 3PF +-.25PF 500VDC CER	28480	0160-2244
A4A5C46	0180-0197	8		CAPACITOR-FXD 2.2UF+-10% 20VDC TA	56289	150D225X9020A2
A4A5C47	0160-4832	4		CAPACITOR-FXD .01UF +-10% 100VDC CER	28480	0160-4832
A4A5C48	0160-4832	4		CAPACITOR-FXD .01UF +-10% 100VDC CER	28480	0160-4832
A4A5C49	0160-4832	4		CAPACITOR-FXD .01UF +-10% 100VDC CER	28480	0160-4832
A4A5C50	0160-4832	4		CAPACITOR-FXD .01UF +-10% 100VDC CER	28480	0160-4832
A4A5C51	0160-4832	4		CAPACITOR-FXD .01UF +-10% 100VDC CER	28480	0160-4832
A4A5C52	0160-4832	4		CAPACITOR-FXD .01UF +-10% 100VDC CER	28480	0160-4832
A4A5C53	0160-4832	4		CAPACITOR-FXD .01UF +-10% 100VDC CER	28480	0160-4832
A4A5C54	0160-4832	4		CAPACITOR-FXD .01UF +-10% 100VDC CER	28480	0160-4832
A4A5C55	0160-4832	4		CAPACITOR-FXD .01UF +-10% 100VDC CER	28480	0160-4832
A4A5C56	0160-4832	4		CAPACITOR-FXD .01UF +-10% 100VDC CER	28480	0160-4832
A4A5C57	0160-4832	4		CAPACITOR-FXD .01UF +-10% 100VDC CER	28480	0160-4832
A4A5C58	0160-4832	4		CAPACITOR-FXD .01UF +-10% 100VDC CER	28480	0160-4832
A4A5C59	0160-4832	4		CAPACITOR-FXD .01UF +-10% 100VDC CER	28480	0160-4832
A4A5C60				NOT ASSIGNED		
A4A5C61	0160-4832	4		CAPACITOR-FXD .01UF +-10% 100VDC CER	28480	0160-4832
A4A5C62	0160-4832	4		CAPACITOR-FXD .01UF +-10% 100VDC CER	28480	0160-4832
A4A5C63	0160-4832	4		CAPACITOR-FXD .01UF +-10% 100VDC CER	28480	0160-4832
A4A5C64	0180-2216	6	1	CAPACITOR-FXD 350UF+75-10% 16VDC AL	56289	39D357G016DH2
A4A5CR1	0122-0255	7	1	DIODE-VVC 1N5144 22PF 10% C4/C60-MIN=3.2	01281	1N5144
A4A5CR2	1901-0040	1	5	DIODE-SWITCHING 30V 50MA 2NS DO-35	28480	1901-0040
A4A5CR3	1901-0040	1		DIODE-SWITCHING 30V 50MA 2NS DO-35	28480	1901-0040
A4A5CR4	1901-0040	1		DIODE-SWITCHING 30V 50MA 2NS DO-35	28480	1901-0040
A4A5CR5	1901-1070	9	4	DIODE-PIN 110V	28480	1901-1070
A4A5CR6	1901-1070	9		DIODE-PIN 110V	28480	1901-1070
A4A5CR7	1901-1070	9		DIODE-PIN 110V	28480	1901-1070
A4A5CR8	1901-1117	5	3	DIODE-SWITCHING 30V	28480	1901-1117
A4A5CR9	1901-1117	5		DIODE-SWITCHING 30V	28480	1901-1117
A4A5CR10	1901-1117	5		DIODE-SWITCHING 30V	28480	1901-1117

TABLE 2. A4A5, REPLACEABLE PARTS (2 OF 3)

Reference Designation	HP Part Number	C D	Qty	Description	Mfr Code	Mfr Part Number
A4A5CR11	1901-1070	9		DIODE-PIN 110V	28480	1901-1070
A4A5CR12	1901-0040	1		DIODE-SWITCHING 30V 50MA 2NS DO-35	28480	1901-0040
A4A5CR13	1901-0040	1		DIODE-SWITCHING 30V 50MA 2NS DO-35	28480	1901-0040
A4A5E1	9170-0029	3	15	CORE-SHIELDING BEAD	28480	9170-0029
A4A5E2	9170-0029	3		CORE-SHIELDING BEAD	28480	9170-0029
A4A5E3	9170-0029	3		CORE-SHIELDING BEAD	28480	9170-0029
A4A5E4	9170-0029	3		CORE-SHIELDING BEAD	28480	9170-0029
A4A5E5	9170-0029	3		CORE-SHIELDING BEAD	28480	9170-0029
A4A5E6	9170-0029	3		CORE-SHIELDING BEAD	28480	9170-0029
A4A5E7	9170-0029	3		CORE-SHIELDING BEAD	28480	9170-0029
A4A5E8	9170-0029	3		CORE-SHIELDING BEAD	28480	9170-0029
A4A5E9				NOT ASSIGNED		
A4A5E10	9170-0029	3		CORE-SHIELDING BEAD	28480	9170-0029
A4A5E11	9170-0029	3		CORE-SHIELDING BEAD	28480	9170-0029
A4A5E12	9170-0029	3		CORE-SHIELDING BEAD	28480	9170-0029
A4A5E13	9170-0029	3		CORE-SHIELDING BEAD	28480	9170-0029
A4A5E14	9170-0029	3		CORE-SHIELDING BEAD	28480	9170-0029
A4A5E15	9170-0029	3		CORE-SHIELDING BEAD	28480	9170-0029
A4A5E16	9170-0029	3		CORE-SHIELDING BEAD	28480	9170-0029
A4A5L1	9140-0266	7	1	INDUCTOR RF-CH-MLD 1.8UH 5% .166DX.385LG	28480	9140-0266
A4A5L2	9140-0158	6	1	INDUCTOR RF-CH-MLD 1UH 10% .105DX.26LG	28480	9140-0158
A4A5L3	9100-1618	1	3	INDUCTOR RF-CH-MLD 5.6UH 10%	28480	9100-1618
A4A5L4	9100-1618	1		INDUCTOR RF-CH-MLD 5.6UH 10%	28480	9100-1618
A4A5L5	9100-1624	9	6	INDUCTOR RF-CH-MLD 30UH 5% .166DX.385LG	28480	9100-1624
A4A5L6	9100-1618	1		INDUCTOR RF-CH-MLD 5.6UH 10%	28480	9100-1618
A4A5L7-A4A5L9				NOT ASSIGNED		
A4A5L10	9100-1624	9		INDUCTOR RF-CH-MLD 30UH 5% .166DX.385LG	28480	9100-1624
A4A5L11	9100-1624	9		INDUCTOR RF-CH-MLD 30UH 5% .166DX.385LG	28480	9100-1624
A4A5L12	9100-1624	9		INDUCTOR RF-CH-MLD 30UH 5% .166DX.385LG	28480	9100-1624
A4A5L13	9100-1624	9		INDUCTOR RF-CH-MLD 30UH 5% .166DX.385LG	28480	9100-1624
A4A5L14	9100-1624	9		INDUCTOR RF-CH-MLD 30UH 5% .166DX.385LG	28480	9100-1624
A4A5Q1	1854-0345	8	3	TRANSISTOR NPN 2N5179 SI TO-72 PD=200MW	04713	2N5179
A4A5Q2	1853-0015	7	3	TRANSISTOR PNP SI PD=200MW FT=500MHZ	28480	1853-0015
A4A5Q3	1854-0345	8		TRANSISTOR NPN 2N5179 SI TO-72 PD=200MW	04713	2N5179
A4A5Q4	1853-0015	7		TRANSISTOR PNP SI PD=200MW FT=500MHZ	28480	1853-0015
A4A5Q5	1854-0345	8		TRANSISTOR NPN 2N5179 SI TO-72 PD=200MW	04713	2N5179
A4A5Q6	1853-0015	7		TRANSISTOR PNP SI PD=200MW FT=500MHZ	28480	1853-0015
A4A5Q7	1854-0404	0	1	TRANSISTOR NPN SI TO-18 PD=360MW	28480	1854-0404
A4A5Q8	1854-0019	3	6	TRANSISTOR NPN SI TO-18 PD=360MW	28480	1854-0019
A4A5Q9	1853-0281	9	1	TRANSISTOR PNP 2N2907A SI TO-18 PD=400MW	04713	2N2907A
A4A5Q10	1854-0019	3		TRANSISTOR NPN SI TO-18 PD=360MW	28480	1854-0019
A4A5Q11	1854-0019	3		TRANSISTOR NPN SI TO-18 PD=360MW	28480	1854-0019
A4A5Q12	1854-0019	3		TRANSISTOR NPN SI TO-18 PD=360MW	28480	1854-0019
A4A5Q13	1854-0019	3		TRANSISTOR NPN SI TO-18 PD=360MW	28480	1854-0019
A4A5Q14	1854-0994	3	3	TRANSISTOR NPN SI TO-72 PD=200MW	28480	1854-0994
A4A5Q15	1854-0994	3		TRANSISTOR NPN SI TO-72 PD=200MW	28480	1854-0994
A4A5Q16	1854-0019	3		TRANSISTOR NPN SI TO-18 PD=360MW	28480	1854-0019
A4A5Q17	1854-0994	3		TRANSISTOR NPN SI TO-72 PD=200MW	28480	1854-0994
A4A5R1	0698-0084	9	4	RESISTOR 2.15K 1% .125W F TC=0+-100	24546	C4-1/8-T0-2151-F
A4A5R2	2100-3183	6	1	RESISTOR-TRMR 10K 10% C SIDE-ADJ 17-TRN	02111	43P103
A4A5R3	0757-0440	7	1	RESISTOR 7.5K 1% .125W F TC=0+-100	24546	C4-1/8-T0-7501-F
A4A5R4	0757-0458	7	1	RESISTOR 51.1K 1% .125W F TC=0+-100	24546	C4-1/8-T0-5112-F
A4A5R5	0757-0288	1	1	RESISTOR 9.09K 1% .125W F TC=0+-100	19701	MF4C1/8-T0-9091-F
A4A5R6	0757-0442	9	7	RESISTOR 10K 1% .125W F TC=0+-100	24546	C4-1/8-T0-1002-F
A4A5R7	0757-0465	6	3	RESISTOR 100K 1% .125W F TC=0+-100	24546	C4-1/8-T0-1003-F
A4A5R8	0757-0439	4	2	RESISTOR 6.81K 1% .125W F TC=0+-100	24546	C4-1/8-T0-6811-F
A4A5R9	0757-0439	4		RESISTOR 6.81K 1% .125W F TC=0+-100	24546	C4-1/8-T0-6811-F
A4A5R10*	0698-0083	8	3	RESISTOR 1.96K 1% .125W F TC=0+-100	24546	C4-1/8-T0-1961-F
A4A5R11	0757-0421	4	1	RESISTOR 825 1% .125W F TC=0+-100	24546	C4-1/8-T0-825R-F
A4A5R12	0757-0442	9		RESISTOR 10K 1% .125W F TC=0+-100	24546	C4-1/8-T0-1002-F
A4A5R13	0757-0465	6		RESISTOR 100K 1% .125W F TC=0+-100	24546	C4-1/8-T0-1003-F
A4A5R14	0757-0442	9		RESISTOR 10K 1% .125W F TC=0+-100	24546	C4-1/8-T0-1002-F
A4A5R15	0757-0442	9		RESISTOR 10K 1% .125W F TC=0+-100	24546	C4-1/8-T0-1002-F
A4A5R16	0757-0401	0	4	RESISTOR 100 1% .125W F TC=0+-100	24546	C4-1/8-T0-101-F
A4A5R17	0757-0346	2	3	RESISTOR 10 1% .125W F TC=0+-100	24546	C4-1/8-T0-10R0-F
A4A5R18	0698-3444	1	5	RESISTOR 316 1% .125W F TC=0+-100	24546	C4-1/8-T0-316R-F
A4A5R19	0698-3437	2	2	RESISTOR 133 1% .125W F TC=0+-100	24546	C4-1/8-T0-133R-F
A4A5R20	0698-0083	8		RESISTOR 1.96K 1% .125W F TC=0+-100	24546	C4-1/8-T0-1961-F
A4A5R21	0698-3444	1		RESISTOR 316 1% .125W F TC=0+-100	24546	C4-1/8-T0-316R-F
A4A5R22	0757-0346	2		RESISTOR 10 1% .125W F TC=0+-100	24546	C4-1/8-T0-10R0-F
A4A5R23	0698-3437	2		RESISTOR 133 1% .125W F TC=0+-100	24546	C4-1/8-T0-133R-F
A4A5R24	0698-0083	8		RESISTOR 1.96K 1% .125W F TC=0+-100	24546	C4-1/8-T0-1961-F
A4A5R25	0757-0279	0	2	RESISTOR 3.16K 1% .125W F TC=0+-100	24546	C4-1/8-T0-3161-F

*Indicates factory selected value

TABLE 2. A4A5, REPLACEABLE PARTS (3 OF 3)

Reference Designation	HP Part Number	C D	Qty	Description	Mfr Code	Mfr Part Number
A4A5R26	0757-0279	0		RESISTOR 3.16K 1% .125W F TC=0+-100	24546	C4-1/8-T0-3161-F
A4A5R27	0757-0290	5	3	RESISTOR 6.19K 1% .125W F TC=0+-100	19701	MF4C1/8-T0-6191-F
A4A5R28	0698-3444	1		RESISTOR 316 1% .125W F TC=0+-100	24546	C4-1/8-T0-316R-F
A4A5R29	0757-0276	7	3	RESISTOR 61.9 1% .125W F TC=0+-100	24546	C4-1/8-T0-6192-F
A4A5R30	0698-3260	9	7	RESISTOR 464K 1% .125W F TC=0+-100	28480	0698-3260
A4A5R31	0757-0280	3	10	RESISTOR 1K 1% .125W F TC=0+-100	24546	C4-1/8-T0-1001-F
A4A5R32	2100-3056	8	3	RESISTOR-TRMR 5K 10% C SIDE-ADJ 17-TRN	02111	43P502
A4A5R33	2100-3163	8	1	RESISTOR-TRMR 1M 20% C SIDE-ADJ 17-TRN	02111	43P105
A4A5R34	0757-0465	6		RESISTOR 100K 1% .125W F TC=0+-100	24546	C4-1/8-T0-1003-F
A4A5R35	0698-3132	4	1	RESISTOR 261 1% .125W F TC=0+-100	24546	C4-1/8-T0-2610-F
A4A5R36	0757-0280	3		RESISTOR 1K 1% .125W F TC=0+-100	24546	C4-1/8-T0-1001-F
A4A5R37	0757-0276	7		RESISTOR 61.9 1% .125W F TC=0+-100	24546	C4-1/8-T0-6192-F
A4A5R38	0757-0401	0		RESISTOR 100 1% .125W F TC=0+-100	24546	C4-1/8-T0-101-F
A4A5R39	0757-0290	5		RESISTOR 6.19K 1% .125W F TC=0+-100	19701	MF4C1/8-T0-6191-F
A4A5R40	0698-3444	1		RESISTOR 316 1% .125W F TC=0+-100	24546	C4-1/8-T0-316R-F
A4A5R41	0698-4037	0	2	RESISTOR 46.4 1% .125W F TC=0+-100	24546	C4-1/8-T0-46R4-F
A4A5R42	0698-3260	9		RESISTOR 464K 1% .125W F TC=0+-100	28480	0698-3260
A4A5R43	0757-0280	3		RESISTOR 1K 1% .125W F TC=0+-100	24546	C4-1/8-T0-1001-F
A4A5R44	2100-3056	8		RESISTOR-TRMR 5K 10% C SIDE-ADJ 17-TRN	02111	43P502
A4A5R45	0757-0280	3		RESISTOR 1K 1% .125W F TC=0+-100	24546	C4-1/8-T0-1001-F
A4A5R46	0757-0420	3	2	RESISTOR 750 1% .125W F TC=0+-100	24546	C4-1/8-T0-751-F
A4A5R47	0757-0276	7		RESISTOR 61.9 1% .125W F TC=0+-100	24546	C4-1/8-T0-6192-F
A4A5R48	0698-4037	0		RESISTOR 46.4 1% .125W F TC=0+-100	24546	C4-1/8-T0-46R4-F
A4A5R49	0757-0290	5		RESISTOR 6.19K 1% .125W F TC=0+-100	19701	MF4C1/8-T0-6191-F
A4A5R50	0698-3444	1		RESISTOR 316 1% .125W F TC=0+-100	24546	C4-1/8-T0-316R-F
A4A5R51	2100-3161	6	1	RESISTOR-TRMR 20K 10% C SIDE-ADJ 17-TRN	02111	43P203
A4A5R52	0698-3260	9		RESISTOR 464K 1% .125W F TC=0+-100	28480	0698-3260
A4A5R53	0757-0280	3		RESISTOR 1K 1% .125W F TC=0+-100	24546	C4-1/8-T0-1001-F
A4A5R54	2100-3056	8		RESISTOR-TRMR 5K 10% C SIDE-ADJ 17-TRN	02111	43P502
A4A5R55	0757-0420	3		RESISTOR 750 1% .125W F TC=0+-100	24546	C4-1/8-T0-751-F
A4A5R56	0757-0280	3		RESISTOR 1K 1% .125W F TC=0+-100	24546	C4-1/8-T0-1001-F
A4A5R57				NOT ASSIGNED		
A4A5R58				NOT ASSIGNED		
A4A5R59	0698-0084	9		RESISTOR 2.15K 1% .125W F TC=0+-100	24546	C4-1/8-T0-2151-F
A4A5R60	0698-3260	9		RESISTOR 464K 1% .125W F TC=0+-100	28480	0698-3260
A4A5R61	0757-0403	2	1	RESISTOR 121 1% .125W F TC=0+-100	24546	C4-1/8-T0-121R-F
A4A5R62*	0698-3151	7	1	RESISTOR 2.87K 1% .125W F TC=0+-100	24546	C4-1/8-T0-2871-F
A4A5R63	0757-0398	4	1	RESISTOR 75 1% .125W F TC=0+-100	24546	C4-1/8-T0-75R0-F
A4A5R64	0757-0280	3		RESISTOR 1K 1% .125W F TC=0+-100	24546	C4-1/8-T0-1001-F
A4A5R65	0757-0442	9		RESISTOR 10K 1% .125W F TC=0+-100	24546	C4-1/8-T0-1002-F
A4A5R66	0757-0442	9		RESISTOR 10K 1% .125W F TC=0+-100	24546	C4-1/8-T0-1002-F
A4A5R67	0698-0084	9		RESISTOR 2.15K 1% .125W F TC=0+-100	24546	C4-1/8-T0-2151-F
A4A5R68	0698-3260	9		RESISTOR 464K 1% .125W F TC=0+-100	28480	0698-3260
A4A5R69	0757-0395	1	1	RESISTOR 56.2 1% .125W F TC=0+-100	24546	C4-1/8-T0-56R2-F
A4A5R70	0757-0419	0	1	RESISTOR 681 1% .125W F TC=0+-100	24546	C4-1/8-T0-681R-F
A4A5R71	0757-0401	0		RESISTOR 100 1% .125W F TC=0+-100	24546	C4-1/8-T0-101-F
A4A5R72-						
A4A5R79				NOT ASSIGNED		
A4A5R80	0757-0280	3		RESISTOR 1K 1% .125W F TC=0+-100	24546	C4-1/8-T0-1001-F
A4A5R81				NOT ASSIGNED		
A4A5R82				NOT ASSIGNED		
A4A5R83	0698-0084	9		RESISTOR 2.15K 1% .125W F TC=0+-100	24546	C4-1/8-T0-2151-F
A4A5R84	0698-3260	9		RESISTOR 464K 1% .125W F TC=0+-100	28480	0698-3260
A4A5R85	0698-3435	0	2	RESISTOR 38.3 1% .125W F TC=0+-100	24546	C4-1/8-T0-38R3-F
A4A5R86*	0698-3447	4	1	RESISTOR 422 1% .125W F TC=0+-100	24546	C4-1/8-T0-422R-F
A4A5R87	0698-3438	3	1	RESISTOR 147 1% .125W F TC=0+-100	24546	C4-1/8-T0-147R-F
A4A5R88	0757-0317	7	1	RESISTOR 1.33K 1% .125W F TC=0+-100	24546	C4-1/8-T0-1331-F
A4A5R89	0757-0280	3		RESISTOR 1K 1% .125W F TC=0+-100	24546	C4-1/8-T0-1001-F
A4A5R90	0757-0442	9		RESISTOR 10K 1% .125W F TC=0+-100	24546	C4-1/8-T0-1002-F
A4A5R91	0757-0280	3		RESISTOR 1K 1% .125W F TC=0+-100	24546	C4-1/8-T0-1001-F
A4A5R92	0698-3260	9		RESISTOR 464K 1% .125W F TC=0+-100	28480	0698-3260
A4A5R93	0698-3435	0		RESISTOR 38.3 1% .125W F TC=0+-100	24546	C4-1/8-T0-38R3-F
A4A5R94				NOT ASSIGNED		
A4A5R95				NOT ASSIGNED		
A4A5R96	0757-0401	0		RESISTOR 100 1% .125W F TC=0+-100	24546	C4-1/8-T0-101-F
A4A5R97	0757-0346	2		RESISTOR 10 1% .125W F TC=0+-100	24546	C4-1/8-T0-10R0-F
A4A5TP1	1251-0600	8	3	CONNECTOR-SGL CONT PIN 1.14-MM-BSC-SZ SQ	28480	1251-0600
A4A5TP2	1251-0600	8		CONNECTOR-SGL CONT PIN 1.14-MM-BSC-SZ SQ	28480	1251-0600
A4A5TP3	1251-0600	0		CONNECTOR-SGL CONT PIN 1.14-MM-BSC-SZ SQ	28480	1251-0600
A4A5U1	1826-1058	3	1	IC OP AMP GP 8-TO-99 PKG	28480	1826-1058
A4A5VR1	1902-3104	6	1	DIODE-ZNR 5.62V 5% DO-35 PD=.4W	28480	1902-3104
A4A5Y1	0410-1489	2	1	XTAL 10.4 MHZ	28480	0410-1489
				MISCELLANEOUS PARTS		
	6960-0016	0	2	PLUG-HOLE TR-HD FOR .125-D-HOLE NYL	28480	6960-0016
	05662-20148	3	1	COVER STEP GAIN	28480	05662-20148
	06701-40001	9	2	EXTRACTOR PC	28480	06701-40001

*Indicates factory selected value

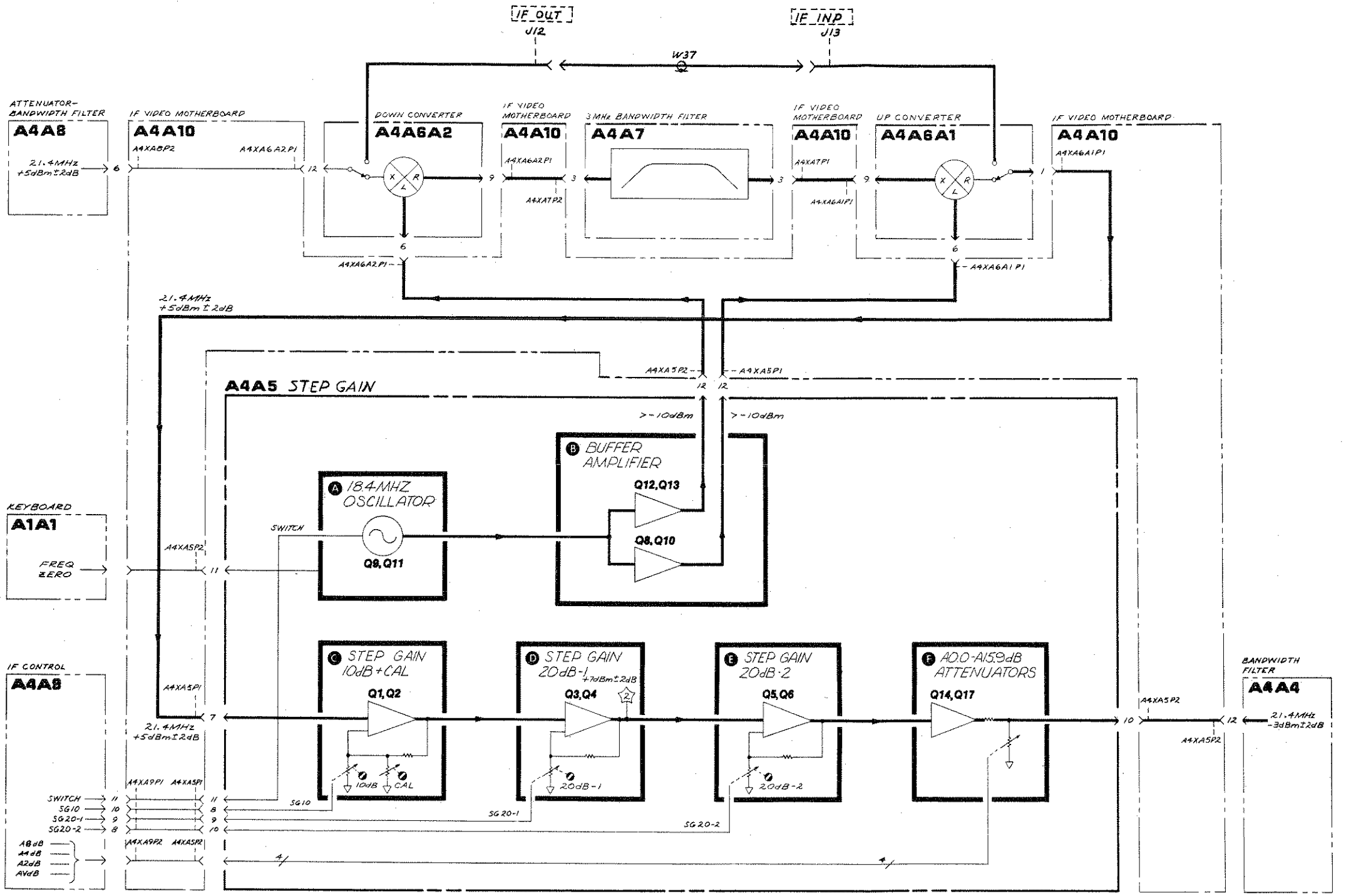

A4A5

FIGURE 9. A4A5 STEP GAIN, BLOCK DIAGRAM

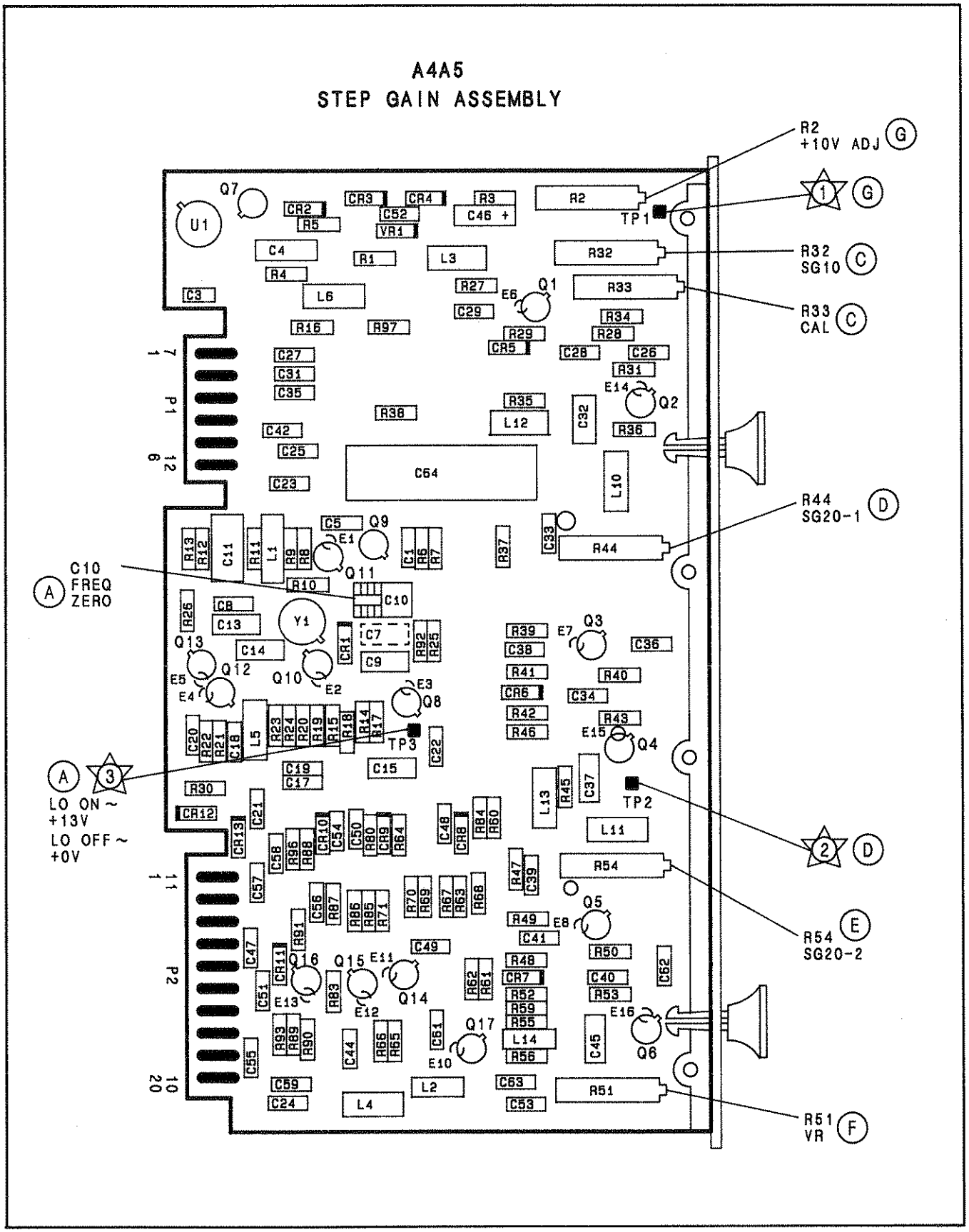

FIGURE 10. A4A5 STEP GAIN, COMPONENT LOCATIONS

A4A5 STEP GAIN
85662-60139

1

PIN	SIGNAL	TO/FROM	FUNCTION BLOCK
1	GND		G
7	21.4 MHz	A4A6A1P1-1	C
2	GND		G
8	SG10	A4A9P1-10	C
3	GND		G
9	SG20-1	A4A9P1-9	D
4	GND		G
10	SG20-2	A4A9P1-8	E
5	+10V_F	A4A4P1-11, A4A8P1-6 A4A9P1-11	G
11	SWITCH		A
6	GND		G
12	18.4 MHz LO	A4A6A1P1-6	B

2

PIN	SIGNAL	TO/FROM	FUNCTION BLOCK
1	GND		G
11	FREQ ZERO	A1A1	A
2	GND		G
12	18.4 MHz LO	A4A6A2P1-1	B
3	GND		G
13	AV dB	A4A9P2-7	F
4	GND		G
14	GND		G
5	GND		G
15	A8 dB	A4A9P2-5	F
6	GND		G
16	A4 dB	A4A9P2-4	F
7	GND		G
17	A2 dB	A4A9P2-22	F
8	GND		G
18	-15V		G
9	GND		G
19	+15V		G
10	21.4 MHz	A4A4P2-12	F
20	GND		G

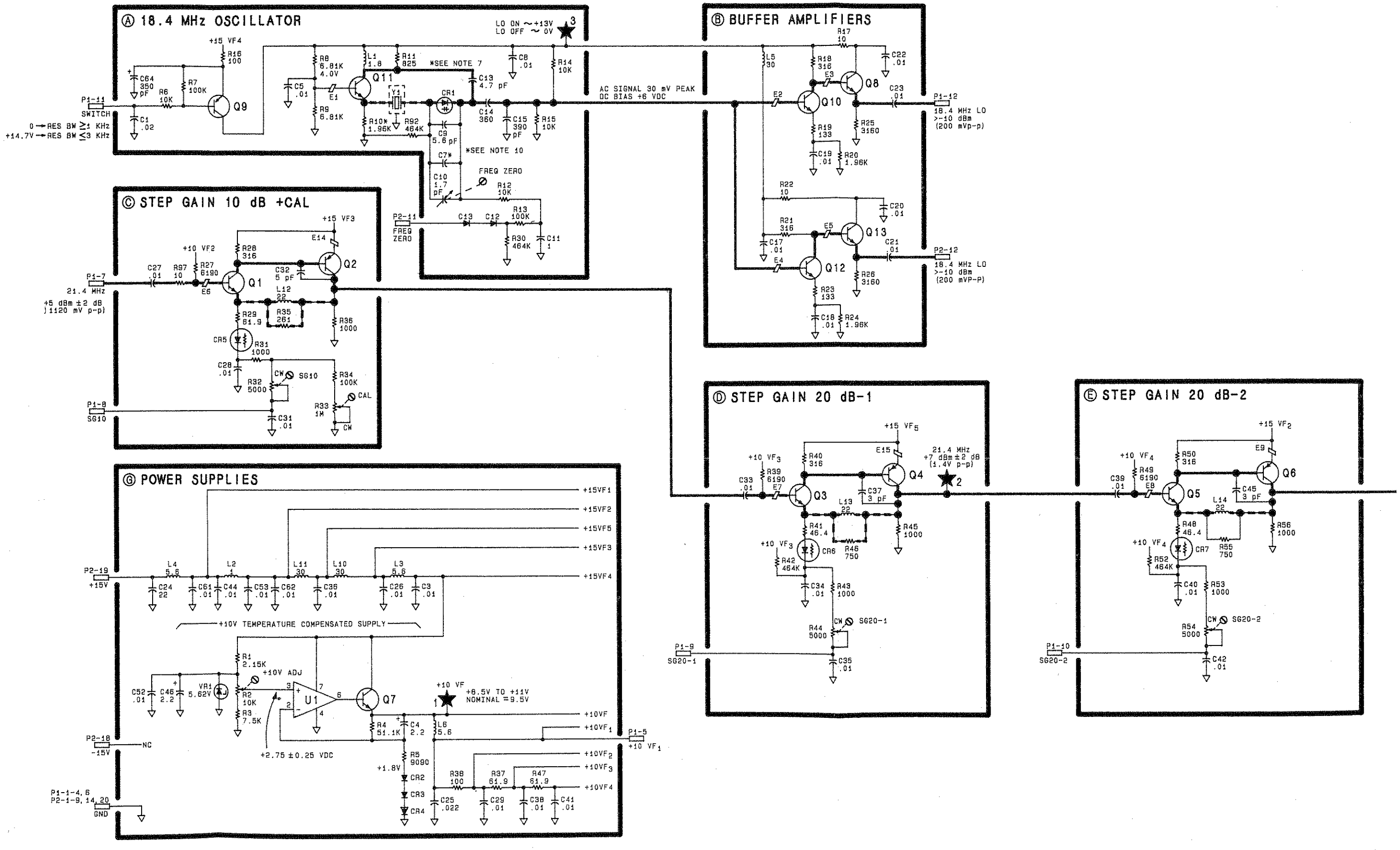

SERIAL NUMBER PREFIX: 2403A

-DISPLAY SECTION

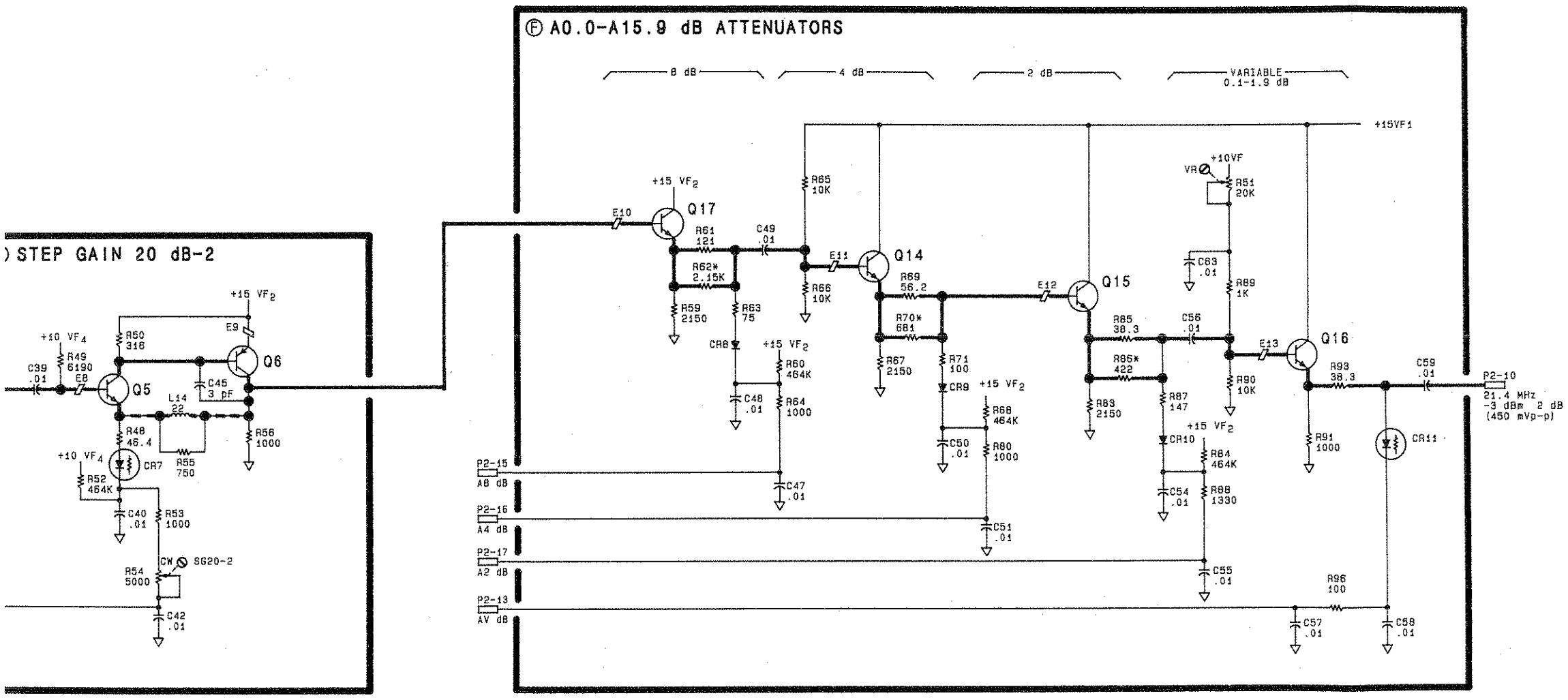

NOTES:

1. REFERENCE DESIGNATORS WITHIN THIS ASSEMBLY ARE ABBREVIATED. FOR COMPLETE REFERENCE DESIGNATION, PREFIX ABBREVIATION WITH ASSEMBLY DESIGNATION.

2. UNLESS OTHERWISE INDICATED:
   RESISTANCE IS IN OHMS (Ω)
   CAPACITANCE IS IN MICROFARADS (μF)
   INDUCTANCE IS IN MICROHENRIES (μH)

3. ASTERISK (*) DENOTES FACTORY SELECTED COMPONENT. TYPICAL VALUE IS SHOWN. REFER TO SECTION V FOR RANGE OF VALUES.

4. MNEMONIC TABLE:

MNEMONIC	DESCRIPTION
A2 dB	ATTENUATION 2 dB
A4 dB	ATTENUATION 4 dB
A8 dB	ATTENUATION 8 dB
AV dB	ATTENUATION VARIABLE
FREQ ZERO	FREQUENCY ZERO FROM FRONT PANEL CONTROL
SG10	STEP GAIN 10 dB
SG20-1	STEP GAIN 20 dB-1
SG20-2	STEP GAIN 20 dB-2
SWITCH	LOW = DOWN CONVERTING (3 MHz IF)

5. RF PERFORMANCE OF THIS BOARD IS ADVERSELY AFFECTED BY USE OF EXTENDERS. SEE TROUBLESHOOTING HINTS FOR INFORMATION ON REPAIR OF THIS BOARD.

6. INSTRUMENT CONTROL SETTINGS FOR ALL MEASUREMENTS ON THIS BOARD ARE AS FOLLOWS:

INSTRUMENT PRESET	CAL. OUT FREQ.
CENTER FREQUENCY	0 Hz
FREQUENCY SPAN	0 dB
ATTENUATION	

7. 300 mV PEAK (SCOPE PROBE MAY LOAD THE CIRCUIT, MAKING ACCURATE MEASUREMENT DIFFICULT).

8. STEP GAIN TRUTH TABLE:

REF. LEVEL RES BW ≤1 KHz	dBm	-10	-20	-30	-40	-50	-60	-70	≤-80
SG10	LOG	>7.5V	>7.5V	>7.5V	0V	>7.5V	0V	>7.5V	0V
SG20-1	LOG	>8.5V	>8.5V	>8.5V	>8.5V	0V	0V	0V	0V
SG20-2	LOG	>8.5V	>8.5V	>8.5V	>8.5V	>8.5V	>8.5V	0V	0V

9. A0.0 - 15.9 dB ATTENUATOR CONTROL TABLE:

REF. LEVEL dBm	CONTROL LINES		
	A2 dB	A4 Db	a8 Db
-10	>+13V	>+13V	0V
-11	>+13V	>+13V	0V
-12	0V	0V	>+13V
-13	0V	0V	>+13V
-14	>+13V	0V	>+13V
-15	>+13V	0V	>+13V
-16	0V	>+13V	>+13V
-17	0V	>+13V	>+13V
-18	>+13V	>+13V	>+13V
-19	>+13V	>+13V	>+13V

10. NORMALLY OPEN.

11. UNLESS OTHERWISE INDICATED:
    SIGNALS ENTER AT LEFT SIDE AND EXIT AT RIGHT SIDE OF FUNCTION BLOCKS.

A4A5

FIGURE 11. A4A5 STEP GAIN, SCHEMATIC DIAGRAM

A4A6A1 UP CONVERTER, CIRCUIT DESCRIPTION

For narrow (≤1 kHz) bandwidths, A4A6A1 Up Converter Assembly converts the 3 MHz IF signal from A4A7 3 MHz Filter to a 21.4 MHz IF signal and sends it to A4A5 Step Gain. For wide (≥3 kHz) bandwidths, the 21.4 MHz from A4A6A2 Down Converter is amplified and sent to A4A5.

Variable Gain Amplifier (A)

The Variable Gain Amplifier has about 6 dB of gain to compensate for the loss incurred by the 50-Ohm Driver in A4A6A2, which converts the 21.4 MHz IF signal into a 50Ω system.

21.4 MHz IF Switch (B)

For wide (≥3 kHz) bandwidths, the SWITCH line goes to +15V, which turns Q6 off. This forward biases CR3 (the current is sunk through the LO Driver and Buffer Amplifier) and reverse biases CR2, allowing the 21.4 MHz IF signal to pass through CR3 and then to A4A5.

For narrow (≤1 kHz) bandwidths, the SWITCH line goes to 1V, turning Q6 on. The collector of Q6 goes to about +15V, which turns the LO Driver on, forward biases CR2, and reverse biases CR3, breaking the path from the Variable Gain Amplifier.

LO Driver and Buffer Amplifier (C)

This circuit is only on for bandwidths ≤1 kHz. It consists of an emitter follower (Q7) driving a common base stage (Q8) which in turn drives a common emitter stage (Q9). The voltages and signal levels are indicated on the schematic.

Mixer (D)

The Mixer is double balanced and has about 6 dB conversion loss. It mixes the 3 MHz IF signal from A4A7 with the 18.4 MHz LO signal from the LO Driver and Buffer Amplifier to produce a 21.4 MHz signal through the 21.4 MHz Bandpass Amplifier to A4A5.

21.4 MHz Bandpass Amplifier (E)

This is a common emitter amplifier with about 7 dB of gain. It is preceded by a wide (BW ≈ 5 MHz) bandpass filter (R61, C32, and L2) and followed by a narrow (BW ≈ 10 kHz) bandpass (T1, Y1, L8, and R60). The wide filter attenuates harmonics of the 18.4 MHz LO, and the narrow filter attenuates the fundamental of the 18.4 MHz LO. 18.4 MHz NULL adjustment C31 compensates for the case capacitance of the crystal. The crystal Y1 and inverting transformer T1 are driven by an emitter follower Q4. The output emitter follower is turned on and off by the SWITCH line.

A4A6A2 DOWN CONVERTER, CIRCUIT DESCRIPTION

For resolution bandwidths ≤1 kHz, A4A6A2 Down Converter converts the 21.4 MHz IF signal from A20 Third Converter down to a 3 MHz IF signal. For resolution bandwidths ≥3 kHz, the 21.4 MHz is not converted but is sent through A4A6A1 Up Converter to A4A5 Step Gain.

Switch (C) and 50-Ohm Driver (A)

For bandwidths ≥3 kHz, the SWITCH line is +15V and Q7 is off. R38 in the LO Driver and Buffer Amplifier pulls the collector of Q7 to less than 0V. This forward biases CR3 and reverse biases CR5, passing the 21.4 MHz IF signal to the 50 Ohm Driver, where it is converted to a 50Ω system (6 dB loss) and sent to A4A6A1.

For bandwidths ≤ 1 kHz, the SWITCH line is 0V, turning Q7 on. The collector Q7 goes to almost +15V, which turns CR5 on (shorting any signal that might pass through CR3) and CR3 off. Q7 also turns the LO on.

LO Driver and Buffer Amplifier (B)

This circuit is only on for bandwidths ≤1 kHz. It consists of an emitter follower Q6 driving a common base stage Q5 which in turn drives a common emitter stage Q2. The proper bias voltages and signal levels are shown on the schematic.

Mixer and Driver (D)

Q1 is an emitter follower driving a step-down transformer. The turns ratio is about 4½ to 1, which yields a 12 dB loss and drives the Mixer from a low impedance. The Mixer has an additional 5 dB loss.

3 MHz Bandpass Amplifier (E)

This amplifier compensates for the losses of the transformer T1 and the mixer U1. The filter at the output, consisting of L5, C22, and R52, has less than 1 dB of loss at 3 MHz.

A4A6 DOWN/UP CONVERTER, TROUBLESHOOTING

If the resolution bandwidths less than 3 kHz are not working properly, the fault is most likely on the Down/Up Converter or the 3 MHz Bandwidth Filter boards.

If only noise is displayed, check the voltage on the SWITCH control lines. If the SWITCH line is working, the 18.4 MHz LO signal levels should be tested. The 18.4 MHz Oscillator is located on the A4A5 Step Gain board.

A4A6A2R33* may have to be changed if mixer A4A6A2U1 is replaced. Refer to the Performance Tests and Adjustments manual for the correct procedure for selecting this value.

Note that the SWITCH control line voltage is different on the A4A6A1 Up Converter board. This is due to a 100Ω resistor, R4, on the A4A10 IF Video Motherboard.

TABLE 1. A4A6, REPLACEABLE PARTS (1 OF 4)

Reference Designation	HP Part Number	CD	Qty	Description	Mfr Code	Mfr Part Number
A4A6	85662-60018	0	1	DOWN/UP CONVERTER ASSEMBLY	28480	85662-60018
A4A6J1	1250-0690	6	2	CONNECTOR-RF SMB M SGL-HOLE-FR 50-OHM	28480	1250-0690
A4A6J2	1250-0690	6		CONNECTOR-RF SMB M SGL-HOLE-FR 50-OHM	28480	1250-0690
				MISCELLANEOUS PARTS		
	86701-40001	9	1	EXTRACTOR, PC BOARD	28480	86701-40001
	85662-20039	1	1	COVER CONVERTER ASSEMBLY	28480	85662-20039
A4A6A1	85662-60006	6	1	BOARD ASSEMBLY, UP CONVERTER (P/O A4A6)	28480	85662-60006
A4A6A1C1-A4A6A1C3				NOT ASSIGNED		
A4A6A1C4	0160-4084	8	2	CAPACITOR-FXD .1UF +-20% 50VDC CER	28480	0160-4084
A4A6A1C5	0160-2055	9	16	CAPACITOR-FXD .01UF +80-20% 100VDC CER	28480	0160-2055
A4A6A1C6-A4A6A1C8				NOT ASSIGNED		
A4A6A1C9	0160-4084	8		CAPACITOR-FXD .1UF +-20% 50VDC CER	28480	0160-4084
A4A6A1C10				NOT ASSIGNED		
A4A6A1C11	0160-2055	9		CAPACITOR-FXD .01UF +80-20% 100VDC CER	28480	0160-2055
A4A6A1C12	0160-2055	9		CAPACITOR-FXD .01UF +80-20% 100VDC CER	28480	0160-2055
A4A6A1C13	0160-2055	9		CAPACITOR-FXD .01UF +80-20% 100VDC CER	28480	0160-2055
A4A6A1C14				NOT ASSIGNED		
A4A6A1C15				NOT ASSIGNED		
A4A6A1C16	0160-2055	9		CAPACITOR-FXD .01UF +80-20% 100VDC CER	28480	0160-2055
A4A6A1C17	0160-2055	9		CAPACITOR-FXD .01UF +80-20% 100VDC CER	28480	0160-2055
A4A6A1C18	0160-2055	9		CAPACITOR-FXD .01UF +80-20% 100VDC CER	28480	0160-2055
A4A6A1C19	0160-2055	9		CAPACITOR-FXD .01UF +80-20% 100VDC CER	28480	0160-2055
A4A6A1C20	0160-2055	9		CAPACITOR-FXD .01UF +80-20% 100VDC CER	28480	0160-2055
A4A6A1C21	0160-2055	9		CAPACITOR-FXD .01UF +80-20% 100VDC CER	28480	0160-2055
A4A6A1C22	0160-2055	9		CAPACITOR-FXD .01UF +80-20% 100VDC CER	28480	0160-2055
A4A6A1C23	0160-2055	9		CAPACITOR-FXD .01UF +80-20% 100VDC CER	28480	0160-2055
A4A6A1C24	0160-2055	9		CAPACITOR-FXD .01UF +80-20% 100VDC CER	28480	0160-2055
A4A6A1C25	0160-2055	9		CAPACITOR-FXD .01UF +80-20% 100VDC CER	28480	0160-2055
A4A6A1C26	0160-2055	9		CAPACITOR-FXD .01UF +80-20% 100VDC CER	28480	0160-2055
A4A6A1C27	0160-2244	8	1	CAPACITOR-FXD 3PF +-.25PF 500VDC CER	28480	0160-2244
A4A6A1C28				NOT ASSIGNED		
A4A6A1C29				NOT ASSIGNED		
A4A6A1C30	0160-2055	9		CAPACITOR-FXD .01UF +80-20% 100VDC CER	28480	0160-2055
A4A6A1C31	0121-0453	5	1	CAPACITOR-V TRMR-AIR 1.3-5.4PF 175V	74970	187-0303-125
A4A6A1C32	0140-0199	6	1	CAPACITOR-FXD 240PF +-5% 300VDC MICA	72136	DM15F241J0300WV1CR
A4A6A1CR1				NOT ASSIGNED		
A4A6A1CR2	1901-0047	8	3	DIODE-SWITCHING 20V 75MA 10NS	28480	1901-0047
A4A6A1CR3	1901-0047	8		DIODE-SWITCHING 20V 75MA 10NS	28480	1901-0047
A4A6A1CR4	1901-0047	8		DIODE-SWITCHING 20V 75MA 10NS	28480	1901-0047
A4A6A1E1	9170-0029	3	7	CORE-SHIELDING BEAD	28480	9170-0029
A4A6A1E2	9170-0029	3		CORE-SHIELDING BEAD	28480	9170-0029
A4A6A1E3	9170-0029	3		CORE-SHIELDING BEAD	28480	9170-0029
A4A6A1E4	9170-0029	3		CORE-SHIELDING BEAD	28480	9170-0029
A4A6A1E5	9170-0029	3		CORE-SHIELDING BEAD	28480	9170-0029
A4A6A1E6	9170-0029	3		CORE-SHIELDING BEAD	28480	9170-0029
A4A6A1E7	9170-0029	3		CORE-SHIELDING BEAD	28480	9170-0029
A4A6A1L1	9140-0112	2	2	INDUCTOR RF-CH-MLD 4.7UH 10%	28480	9140-0112
A4A6A1L2	9100-1611	4	1	INDUCTOR RF-CH-MLD 220NH 20%	28480	9100-1611
A4A6A1L3				NOT ASSIGNED		
A4A6A1L4	9100-1624	9	1	INDUCTOR RF-CH-MLD 30UH 5% .166DX.385LG	28480	9100-1624
A4A6A1L5	9100-1620	5	1	INDUCTOR RF-CH-MLD 15UH 10% .166DX.385LG	28480	9100-1620
A4A6A1L6				NOT ASSIGNED		
A4A6A1L7	9140-0112	2		INDUCTOR RF-CH-MLD 4.7UH 10%	28480	9140-0112
A4A6A1L8	9100-1618	1	1	INDUCTOR RF-CH-MLD 5.6UH 10%	28480	9100-1618
A4A6A1Q1	1854-0019	3	5	TRANSISTOR NPN SI TO-18 PD=360MW	28480	1854-0019
A4A6A1Q2	1853-0007	7	2	TRANSISTOR PNP 2N3251 SI TO-18 PD=360MW	04713	2N3251
A4A6A1Q3	1854-0345	8	1	TRANSISTOR NPN 2N5179 SI TO-72 PD=200MW	04713	2N5179
A4A6A1Q4	1854-0019	3		TRANSISTOR NPN SI TO-18 PD=360MW	28480	1854-0019
A4A6A1Q5	1854-0247	9	1	TRANSISTOR NPN SI TO-39 PD=1W FT=800MHZ	28480	1854-0247
A4A6A1Q6	1853-0007	7		TRANSISTOR PNP 2N3251 SI TO-18 PD=360MW	04713	2N3251
A4A6A1Q7	1854-0019	3		TRANSISTOR NPN SI TO-18 PD=360MW	28480	1854-0019
A4A6A1Q8	1854-0019	3		TRANSISTOR NPN SI TO-18 PD=360MW	28480	1854-0019
A4A6A1Q9	1854-0019	3		TRANSISTOR NPN SI TO-18 PD=360MW	28480	1854-0019
A4A6A1R1	0757-0401	0	2	RESISTOR 100 1% .125W F TC=0+-100	24546	C4-1/8-T0-101-F
A4A6A1R2				NOT ASSIGNED		
A4A6A1R3				NOT ASSIGNED		
A4A6A1R4	0757-1094	9	1	RESISTOR 1.47K 1% .125W F TC=0+-100	24546	C4-1/8-T0-1471-F
A4A6A1R5	0757-0465	6	2	RESISTOR 100K 1% .125W F TC=0+-100	24546	C4-1/8-T0-1003-F

TABLE 1. A4A6, REPLACEABLE PARTS (2 OF 4)

Reference Designation	HP Part Number	C D	Qty	Description	Mfr Code	Mfr Part Number
A4A6A1R6	0757-0438	3	1	RESISTOR 5.11K 1% .125W F TC=0+-100	24546	C4-1/8-T0-5111-F
A4A6A1R7				NOT ASSIGNED		
A4A6A1R8				NOT ASSIGNED		
A4A6A1R9	0698-3442	9	1	RESISTOR 237 1% .125W F TC=0+-100	24546	C4-1/8-T0-237R-F
A4A6A1R10	0757-0400	9	1	RESISTOR 90.9 1% .125W F TC=0+-100	24546	C4-1/8-T0-90R9-F
A4A6A1R11				NOT ASSIGNED		
A4A6A1R12	0757-0279	0	2	RESISTOR 3.16K 1% .125W F TC=0+-100	24546	C4-1/8-T0-3161-F
A4A6A1R13	0757-0279	0		RESISTOR 3.16K 1% .125W F TC=0+-100	24546	C4-1/8-T0-3161-F
A4A6A1R14	0757-0465	6		RESISTOR 100K 1% .125W F TC=0+-100	24546	C4-1/8-T0-1003-F
A4A6A1R15	0757-0280	3	4	RESISTOR 1K 1% .125W F TC=0+-100	24546	C4-1/8-T0-1001-F
A4A6A1R16	0757-0317	7	1	RESISTOR 1.33K 1% .125W F TC=0+-100	24546	C4-1/8-T0-1331-F
A4A6A1R17	0757-0442	9	5	RESISTOR 10K 1% .125W F TC=0+-100	24546	C4-1/8-T0-1002-F
A4A6A1R18	0757-0442	9		RESISTOR 10K 1% .125W F TC=0+-100	24546	C4-1/8-T0-1002-F
A4A6A1R19	0757-0280	3		RESISTOR 1K 1% .125W F TC=0+-100	24546	C4-1/8-T0-1001-F
A4A6A1R20	0757-0280	3		RESISTOR 1K 1% .125W F TC=0+-100	24546	C4-1/8-T0-1001-F
A4A6A1R21	0757-0180	2	2	RESISTOR 31.6 1% .125W F TC=0+-100	28480	0757-0180
A4A6A1R22	0757-0180	2		RESISTOR 31.6 1% .125W F TC=0+-100	28480	0757-0180
A4A6A1R23	0757-0346	2	2	RESISTOR 10 1% .125W F TC=0+-100	24546	C4-1/8-T0-10R0-F
A4A6A1R24	0757-0416	7	2	RESISTOR 511 1% .125W F TC=0+-100	24546	C4-1/8-T0-511R-F
A4A6A1R25	0757-0280	3		RESISTOR 1K 1% .125W F TC=0+-100	24546	C4-1/8-T0-1001-F
A4A6A1R26	0757-0394	0	1	RESISTOR 51.1 1% .125W F TC=0+-100	24546	C4-1/8-T0-51R1-F
A4A6A1R27	0757-0439	4	1	RESISTOR 6.81K 1% .125W F TC=0+-100	24546	C4-1/8-T0-6811-F
A4A6A1R28	0757-0442	9		RESISTOR 10K 1% .125W F TC=0+-100	24546	C4-1/8-T0-1002-F
A4A6A1R29	2100-3154	7	1	RESISTOR-TRMR 1K 10% C SIDE-ADJ 17-TRN	02111	43P102
A4A6A1R30	0698-3439	4	1	RESISTOR 178 1% .125W F TC=0+-100	24546	C4-1/8-T0-178R-F
A4A6A1R31				NOT ASSIGNED		
A4A6A1R32	0757-0419	0	1	RESISTOR 681 1% .125W F TC=0+-100	24546	C4-1/8-T0-681R-F
A4A6A1R33	0757-0346	2		RESISTOR 10 1% .125W F TC=0+-100	24546	C4-1/8-T0-10R0-F
A4A6A1R34	0757-0442	9		RESISTOR 10K 1% .125W F TC=0+-100	24546	C4-1/8-T0-1002-F
A4A6A1R35	0698-3444	1	1	RESISTOR 316 1% .125W F TC=0+-100	24546	C4-1/8-T0-316R-F
A4A6A1R50	0757-0442	9		RESISTOR 10K 1% .125W F TC=0+-100	24546	C4-1/8-T0-1002-F
A4A6A1R51	0757-0447	4	1	RESISTOR 16.2K 1% .125W F TC=0+-100	24546	C4-1/8-T0-1622-F
A4A6A1R52-A4A6A1R59				NOT ASSIGNED		
A4A6A1R60	0757-0416	7		RESISTOR 511 1% .125W F TC=0+-100	24546	C4-1/8-T0-511R-F
A4A6A1R61	0757-0401	8		RESISTOR 100 1% .125W F TC=0+-100	24546	C4-1/8-T0-101-F
A4A6A1T1	85662-80002	4	1	COIL ASSY X-FER	28480	85662-80002
A4A6A1TP2	1251-0600	0	2	CONNECTOR-SGL CONT PIN 1.14-MM-BSC-SZ SQ	28480	1251-0600
A4A6A1TP3	1251-0600	0		CONNECTOR-SGL CONT PIN 1.14-MM-BSC-SZ SQ	28480	1251-0600
A4A6A1U1	0955-0084	5	1	MIXER DBL BAL S BARR DIODE; P=200MW MAX	28480	0955-0084
A4A6A1Y1				CRYSTAL, 21.4 MHZ, SET OF SIX INCLUDES A4A4Y1-3, A4A6A1Y1 AND A4A8Y1-2		
				MISCELLANEOUS PARTS		
	6960-0016	0	1	PLUG-HOLE TR-HD FOR .125-D-HOLE NYL	28480	6960-0016

TABLE 1. A4A6, REPLACEABLE PARTS (3 OF 4)

Reference Designation	HP Part Number	C D	Qty	Description	Mfr Code	Mfr Part Number
A4A6A2	85662-60005	5	1	BOARD ASSEMBLY, DOWN CONVERTER(P/O A4A6)	28480	85662-60005
A4A6A2C1				NOT ASSIGNED		
A4A6A2C2	0160-2055	9	18	CAPACITOR-FXD .01UF +80-20% 100VDC CER	28480	0160-2055
A4A6A2C3				NOT ASSIGNED		
A4A6A2C4	0160-2055	9		CAPACITOR-FXD .01UF +80-20% 100VDC CER	28480	0160-2055
A4A6A2C5				NOT ASSIGNED		
A4A6A2C6				NOT ASSIGNED		
A4A6A2C7	0160-2055	9		CAPACITOR-FXD .01UF +80-20% 100VDC CER	28480	0160-2055
A4A6A2C8	0160-2055	9		CAPACITOR-FXD .01UF +80-20% 100VDC CER	28480	0160-2055
A4A6A2C9	0160-2055	9		CAPACITOR-FXD .01UF +80-20% 100VDC CER	28480	0160-2055
A4A6A2C10	0160-2055	9		CAPACITOR-FXD .01UF +80-20% 100VDC CER	28480	0160-2055
A4A6A2C11	0160-2055	9		CAPACITOR-FXD .01UF +80-20% 100VDC CER	28480	0160-2055
A4A6A2C12	0160-2055	9		CAPACITOR-FXD .01UF +80-20% 100VDC CER	28480	0160-2055
A4A6A2C13	0160-2055	9		CAPACITOR-FXD .01UF +80-20% 100VDC CER	28480	0160-2055
A4A6A2C14	0140-0196	3	1	CAPACITOR-FXD 150PF +-5% 300VDC MICA	72136	DM15F151J0300WV1CR
A4A6A2C15	0160-2055	9		CAPACITOR-FXD .01UF +80-20% 100VDC CER	28480	0160-2055
A4A6A2C16	0160-2055	9		CAPACITOR-FXD .01UF +80-20% 100VDC CER	28480	0160-2055
A4A6A2C17	0160-2055	9		CAPACITOR-FXD .01UF +80-20% 100VDC CER	28480	0160-2055
A4A6A2C18	0160-4084	8	2	CAPACITOR-FXD .1UF +-20% 50VDC CER	28480	0160-4084
A4A6A2C19	0160-4084	8		CAPACITOR-FXD .1UF +-20% 50VDC CER	28480	0160-4084
A4A6A2C20	0160-2055	9		CAPACITOR-FXD .01UF +80-20% 100VDC CER	28480	0160-2055
A4A6A2C21	0160-2207	3	1	CAPACITOR-FXD 300PF +-5% 300VDC MICA	28480	0160-2207
A4A6A2C22	0140-0193	9	1	CAPACITOR-FXD 82PF +-5% 300VDC MICA	72136	DM15E820J0300WV1CR
A4A6A2C23	0160-2055	9		CAPACITOR-FXD .01UF +80-20% 100VDC CER	28480	0160-2055
A4A6A2C24	0160-2055	9		CAPACITOR-FXD .01UF +80-20% 100VDC CER	28480	0160-2055
A4A6A2C25				NOT ASSIGNED		
A4A6A2C26				NOT ASSIGNED		
A4A6A2C27	0160-2055	9		CAPACITOR-FXD .01UF +80-20% 100VDC CER	28480	0160-2055
A4A6A2C28	0160-2055	9		CAPACITOR-FXD .01UF +80-20% 100VDC CER	28480	0160-2055
A4A6A2C29	0160-2055	9		CAPACITOR-FXD .01UF +80-20% 100VDC CER	28480	0160-2055
A4A6A2C30	0140-0210	2	1	CAPACITOR-FXD 270PF +-5% 300VDC MICA	72136	DM15F271J0300WV1CR
A4A6A2CR1	1901-0040	1	1	DIODE-SWITCHING 30V 50MA 2NS DO-35	28480	1901-0040
A4A6A2CR2				NOT ASSIGNED		
A4A6A2CR3	1901-0047	8	2	DIODE-SWITCHING 20V 75MA 10NS	28480	1901-0047
A4A6A2CR4				NOT ASSIGNED		
A4A6A2CR5	1901-0047	8		DIODE-SWITCHING 20V 75MA 10NS	28480	1901-0047
A4A6A2E1	9170-0029	3	4	CORE-SHIELDING BEAD	28480	9170-0029
A4A6A2E2	9170-0029	3		CORE-SHIELDING BEAD	28480	9170-0029
A4A6A2E3	9170-0029	3		CORE-SHIELDING BEAD	28480	9170-0029
A4A6A2E4	9170-0029	3		CORE-SHIELDING BEAD	28480	9170-0029
A4A6A2L1	9140-0111	1	1	INDUCTOR RF-CH-MLD 3.3UH 10%	28480	9140-0111
A4A6A2L2				NOT ASSIGNED		
A4A6A2L3				NOT ASSIGNED		
A4A6A2L4	9140-0112	2	3	INDUCTOR RF-CH-MLD 4.7UH 10%	28480	9140-0112
A4A6A2L5	9100-1625	0	1	INDUCTOR RF-CH-MLD 33UH 5% .166DX.385LG	28480	9100-1625
A4A6A2L6				NOT ASSIGNED		
A4A6A2L7				NOT ASSIGNED		
A4A6A2L8	9140-0112	2		INDUCTOR RF-CH-MLD 4.7UH 10%	28480	9140-0112
A4A6A2L9	9140-0112	2		INDUCTOR RF-CH-MLD 4.7UH 10%	28480	9140-0112
A4A6A2L10	9140-0114	4	1	INDUCTOR RF-CH-MLD 10UH 10% .166DX.385LG	28480	9140-0114
A4A6A2L11	9100-1611	4	1	INDUCTOR RF-CH-MLD 220NH 20%	28480	9100-1611
A4A6A2L12	9100-2232	7	1	INDUCTOR RF-CH-MLD 560NH 10%	28480	9100-2232
A4A6A2Q1	1854-0019	3	4	TRANSISTOR NPN SI TO-18 PD=360MW	28480	1854-0019
A4A6A2Q2	1853-0034	0	2	TRANSISTOR PNP SI TO-18 PD=360MW	28480	1853-0034
A4A6A2Q3	1854-0019	3		TRANSISTOR NPN SI TO-18 PD=360MW	28480	1854-0019
A4A6A2Q4	1854-0345	8	1	TRANSISTOR NPN 2N5179 SI TO-72 PD=200MW	04713	2N5179
A4A6A2Q5	1854-0019	3		TRANSISTOR NPN SI TO-18 PD=360MW	28480	1854-0019
A4A6A2Q6	1854-0019	3		TRANSISTOR NPN SI TO-18 PD=360MW	28480	1854-0019
A4A6A2Q7	1853-0007	7	1	TRANSISTOR PNP 2N3251 SI TO-18 PD=360MW	04713	2N3251
A4A6A2Q8	1853-0034	0		TRANSISTOR PNP SI TO-18 PD=360MW	28480	1853-0034
A4A6A2R1				NOT ASSIGNED		
A4A6A2R2				NOT ASSIGNED		
A4A6A2R3				NOT ASSIGNED		
A4A6A2R4	0698-0083	8	1	RESISTOR 1.96K 1% .125W F TC=0+-100	24546	C4-1/8-TO-1961-F
A4A6A2R5- A4A6A2R10				NOT ASSIGNED		
A4A6A2R11	0757-0346	2	4	RESISTOR 10 1% .125W F TC=0+-100	24546	C4-1/8-TO-10R0-F
A4A6A2R12	0757-0279	0	5	RESISTOR 3.16K 1% .125W F TC=0+-100	24546	C4-1/8-TO-3161-F
A4A6A2R13	0757-0279	0		RESISTOR 3.16K 1% .125W F TC=0+-100	24546	C4-1/8-TO-3161-F
A4A6A2R14	0757-0394	0	4	RESISTOR 51.1 1% .125W F TC=0+-100	24546	C4-1/8-TO-51R1-F
A4A6A2R15	0757-0465	6	1	RESISTOR 100K 1% .125W F TC=0+-100	24546	C4-1/8-TO-1003-F

TABLE 1. A4A6, REPLACEABLE PARTS (4 OF 4)

Reference Designation	HP Part Number	C D	Qty	Description	Mfr Code	Mfr Part Number
A4A6A2R16	0757-0442	9	4	RESISTOR 10K 1% .125W F TC=0+-100	24546	C4-1/8-T0-1002-F
A4A6A2R17	0757-0394	0		RESISTOR 51.1 1% .125W F TC=0+-100	24546	C4-1/8-T0-51R1-F
A4A6A2R18	0757-0442	9		RESISTOR 10K 1% .125W F TC=0+-100	24546	C4-1/8-T0-1002-F
A4A6A2R19	0757-0418	9	2	RESISTOR 619 1% .125W F TC=0+-100	24546	C4-1/8-T0-619R-F
A4A6A2R20	0698-0084	9	2	RESISTOR 2.15K 1% .125W F TC=0+-100	24546	C4-1/8-T0-2151-F
A4A6A2R21				NOT ASSIGNED		
A4A6A2R22	0757-0442	9		RESISTOR 10K 1% .125W F TC=0+-100	24546	C4-1/8-T0-1002-F
A4A6A2R23	0757-0279	0		RESISTOR 3.16K 1% .125W F TC=0+-100	24546	C4-1/8-T0-3161-F
A4A6A2R24	0757-0346	2		RESISTOR 10 1% .125W F TC=0+-100	24546	C4-1/8-T0-10R0-F
A4A6A2R25	0698-0084	9		RESISTOR 2.15K 1% .125W F TC=0+-100	24546	C4-1/8-T0-2151-F
A4A6A2R26	0757-0394	0		RESISTOR 51.1 1% .125W F TC=0+-100	24546	C4-1/8-T0-51R1-F
A4A6A2R27	0698-0082	7	2	RESISTOR 464 1% .125W F TC=0+-100	24546	C4-1/8-T0-4640-F
A4A6A2R28	0757-0180	2	1	RESISTOR 31.6 1% .125W F TC=0+-100	28480	0757-0180
A4A6A2R29	0698-0082	7		RESISTOR 464 1% .125W F TC=0+-100	24546	C4-1/8-T0-4640-F
A4A6A2R30	0757-0279	0		RESISTOR 3.16K 1% .125W F TC=0+-100	24546	C4-1/8-T0-3161-F
A4A6A2R31	0757-0401	0	1	RESISTOR 100 1% .125W F TC=0+-100	24546	C4-1/8-T0-101-F
A4A6A2R32	0698-3447	4	1	RESISTOR 422 1% .125W F TC=0+-100	24546	C4-1/8-T0-422R-F
A4A6A2R33*	0757-0395	1	1	RESISTOR 56.2 1% .125W F TC=0+-100	24546	C4-1/8-T0-56R2-F
A4A6A2R34				NOT ASSIGNED		
A4A6A2R35	0757-0346	2		RESISTOR 10 1% .125W F TC=0+-100	24546	C4-1/8-T0-10R0-F
A4A6A2R36				NOT ASSIGNED		
A4A6A2R37				NOT ASSIGNED		
A4A6A2R38	0757-0438	3	1	RESISTOR 5.11K 1% .125W F TC=0+-100	24546	C4-1/8-T0-5111-F
A4A6A2R39	0757-0279	0		RESISTOR 3.16K 1% .125W F TC=0+-100	24546	C4-1/8-T0-3161-F
A4A6A2R40	0757-0442	9		RESISTOR 10K 1% .125W F TC=0+-100	24546	C4-1/8-T0-1002-F
A4A6A2R41	0757-0394	0		RESISTOR 51.1 1% .125W F TC=0+-100	24546	C4-1/8-T0-51R1-F
A4A6A2R42	0757-0418	9		RESISTOR 619 1% .125W F TC=0+-100	24546	C4-1/8-T0-619R-F
A4A6A2R43-A4A6A2R49				NOT ASSIGNED		
A4A6A2R50	0757-0346	2		RESISTOR 10 1% .125W F TC=0+-100	24546	C4-1/8-T0-10R0-F
A4A6A2R51				NOT ASSIGNED		
A4A6A2R52	0757-0280	3	1	RESISTOR 1K 1% .125W F TC=0+-100	24546	C4-1/8-T0-1001-F
A4A6A2T1	85662-80001	3	1	COIL AY XFMR	28480	85662-80001
A4A6A2TP1	1251-0600	0	4	CONNECTOR-SGL CONT PIN 1.14-MM-BSC-SZ SQ	28480	1251-0600
A4A6A2TP2	1251-0600	0		CONNECTOR-SGL CONT PIN 1.14-MM-BSC-SZ SQ	28480	1251-0600
A4A6A2TP3	1251-0600	0		CONNECTOR-SGL CONT PIN 1.14-MM-BSC-SZ SQ	28480	1251-0600
A4A6A2TP4	1251-0600	0		CONNECTOR-SGL CONT PIN 1.14-MM-BSC-SZ SQ	28480	1251-0600
A4A6A2U1	0955-0084	5	1	MIXER DBL BAL S BARR DIODE; P=200MW MAX	28480	0955-0084
A4A6A2VR1	1902-0049	2	1	DIODE-ZNR 6.19V 5% DO-35 PD=.4W	28480	1902-0049
				MISCELLANEOUS PARTS		
	6960-0016	0	1	PLUG-HOLE TR-HD FOR .125-D-HOLE NYL	28480	6960-0016

*Indicates factory selected value

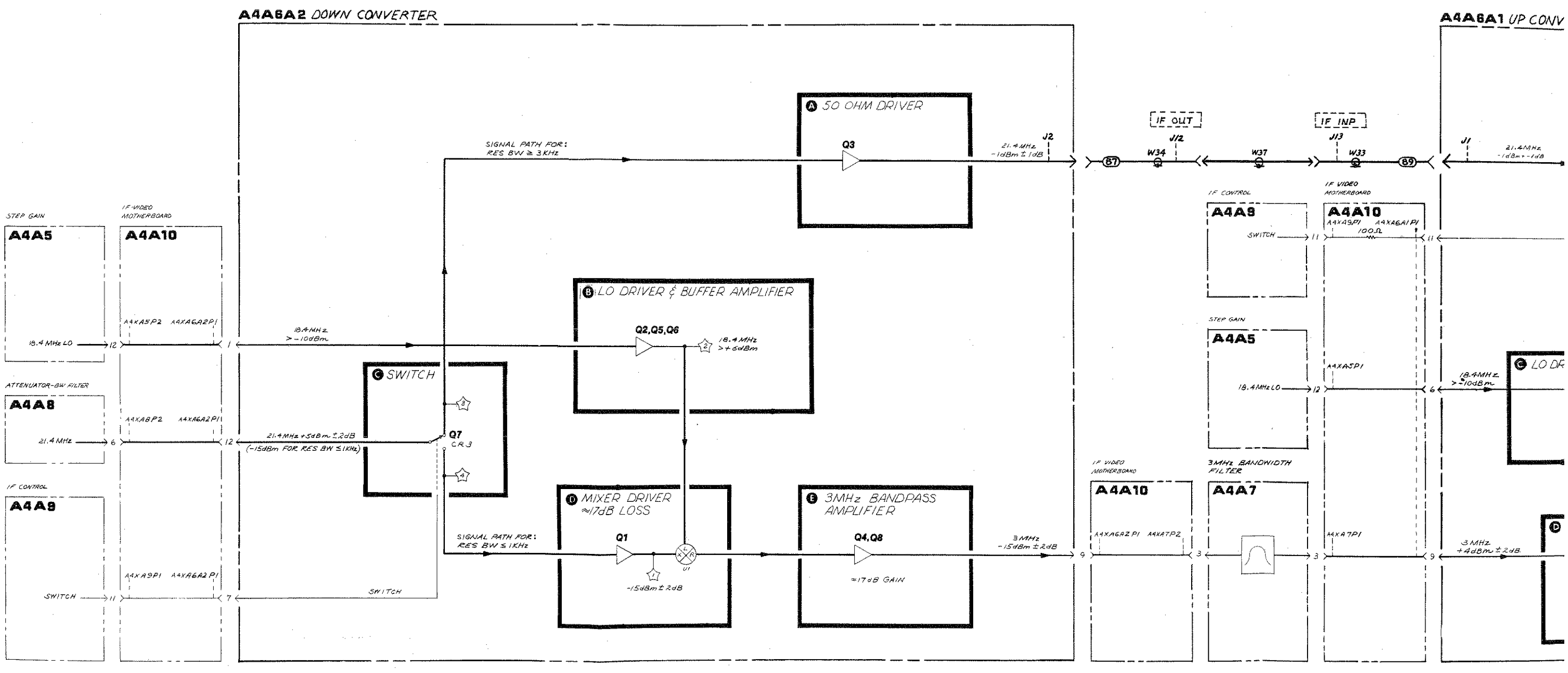
A4A6A2 DOWN CONVERTER
A4A6A1 UP CONV
A SO OHM DRIVER
Q3
SIGNAL PATH FOR: RES BW ≥ 3KHz
21.4 MHz -1dBm ± 1dB
J2
IF OUT
J12
W34
W37
IF INP
J13
W33
87
89
J1
21.4MHz -1dBm ± 1dB
IF CONTROL
A4A9
SWITCH
11
IF VIDEO MOTHERBOARD
A4A10
A4XA9P1
A4XA6A1P1
100Ω
STEP GAIN
A4A5
18.4 MHz LO
12
A4XA5P2
A4XA6A2P1
1
18.4MHz >-10dBm
B LO DRIVER & BUFFER AMPLIFIER
Q2,Q5,Q6
2
18.4 MHz >+6dBm
C SWITCH
3
4
ATTENUATOR-BW FILTER
A4A8
21.4 MHz
6
A4XA8P2
A4XA6A2P1
21.4 MHz +5dBm ± 2dB
(-15dBm FOR RES BW ≤ 1KHz)
Q7
CR 3
D MIXER DRIVER ≈17dB LOSS
Q1
-15dBm ± 2dB
U1
SIGNAL PATH FOR: RES BW ≤ 1KHz
SWITCH
A4XA9P1
A4XA6A2P1
7
E 3MHz BANDPASS AMPLIFIER
Q4,Q8
≈17dB GAIN
3MHz -15dBm ± 2dB
9
IF VIDEO MOTHERBOARD
A4A10
A4XA6A2P1
A4XA7P2
3
3MHz BANDWIDTH FILTER
A4A7
A4XA7P1
3MHz +4dBm ± 2dB
C LO DR
D

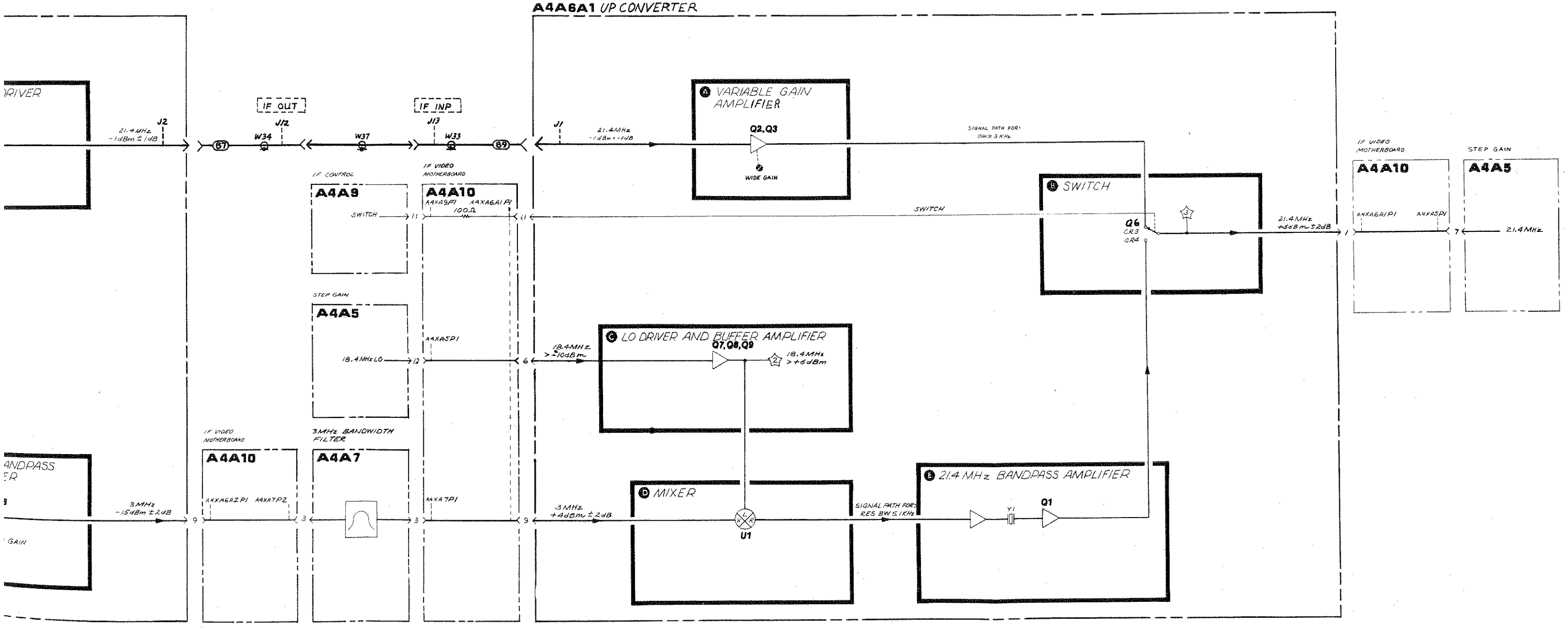

A4A6

FIGURE 1. A4A6A2 DOWN CONVERTER AND A4A6A1 UP CONVERTER, BLOCK DIAGRAM

A4A6
DOWN/UP CONVERTER

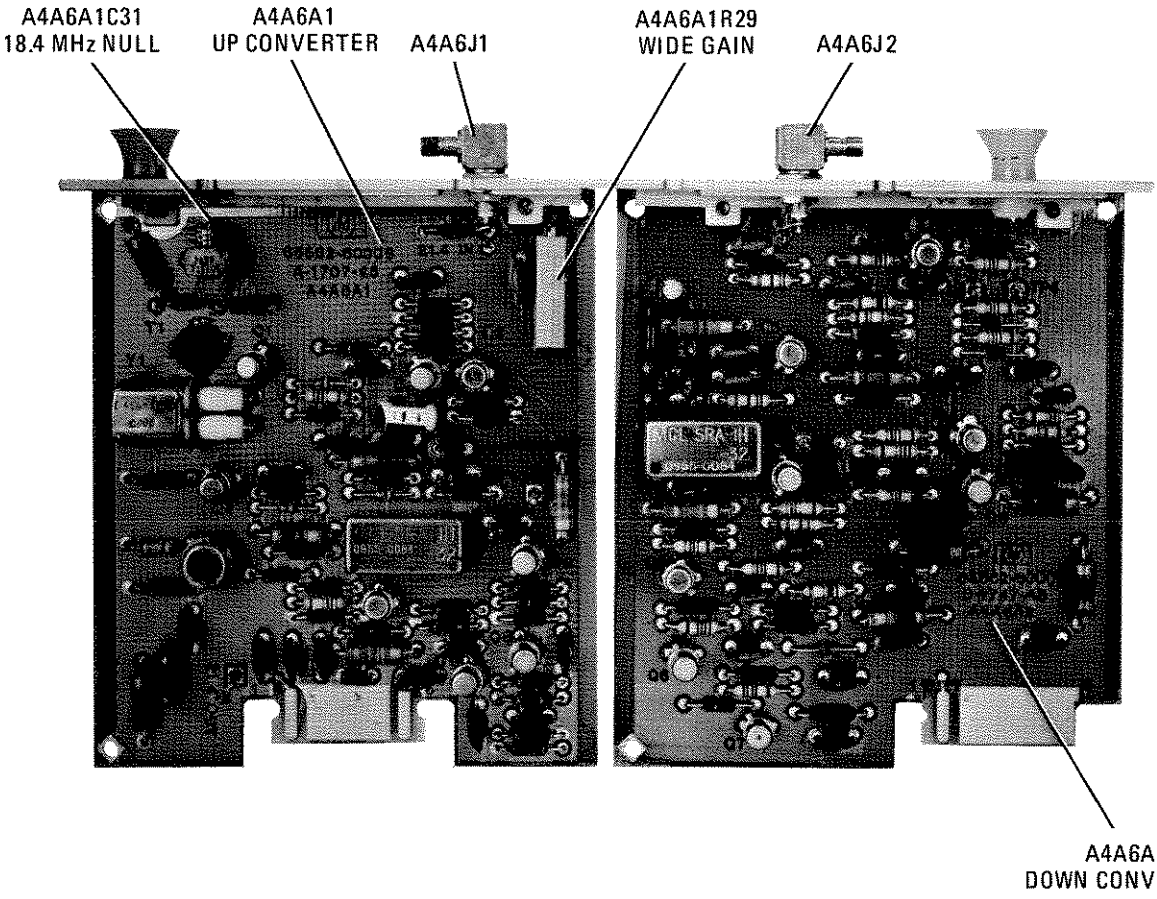

FIGURE 2. A4A6 DOWN/UP CONVERTER, ASSEMBLY AND COMPONENT LOCATIONS

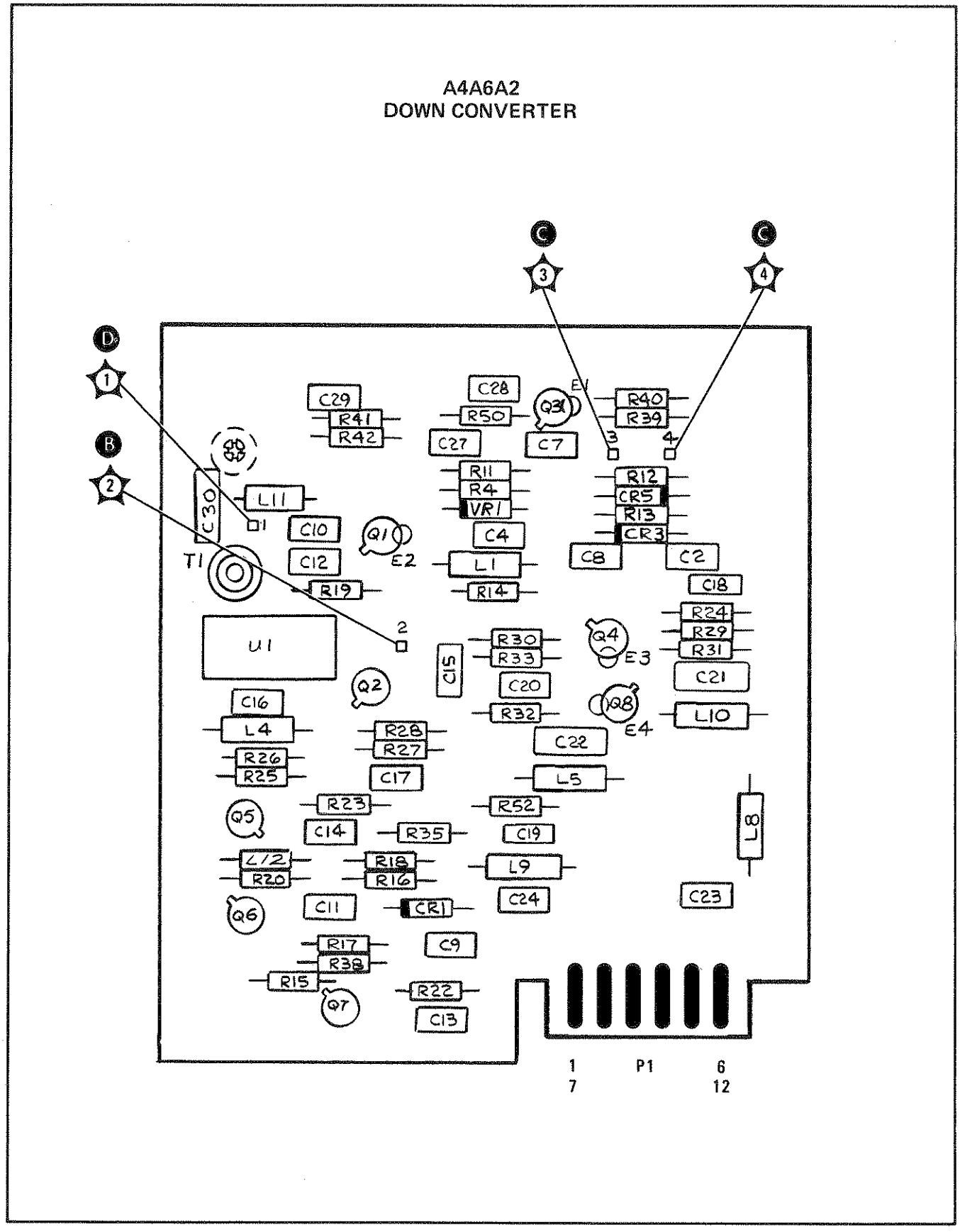

FIGURE 3. A4A6A2 DOWN CONVERTER, COMPONENT LOCATIONS

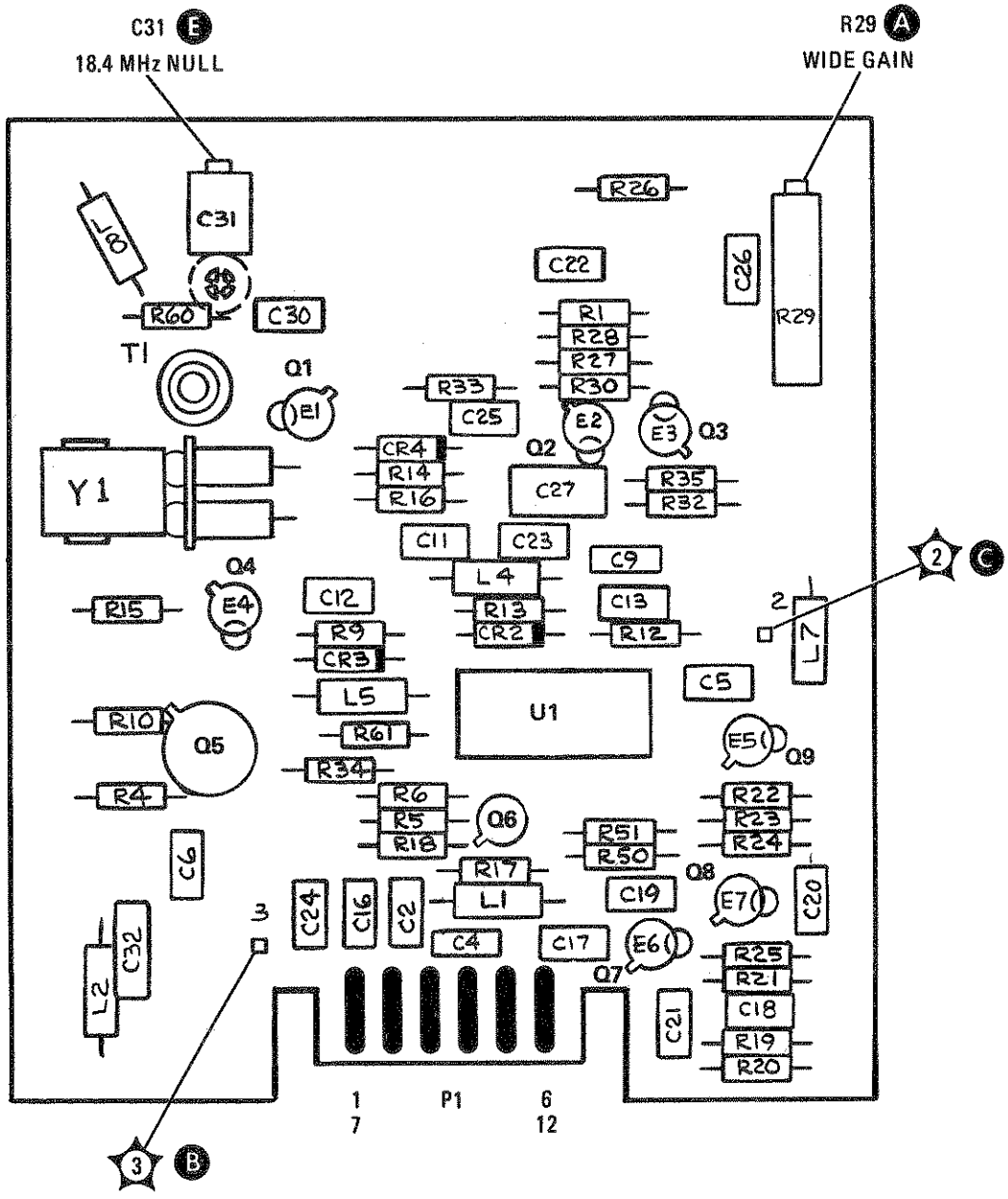

FIGURE 4. A4A6A1 UP CONVERTER, COMPONENT LOCATIONS

A4A6 DOWN/UP CONVERTER
85662-60018

A4A6A2 DOWN CONVERTER
85662-60005

P

PIN	SIGNAL	TO/FROM	FUNCTION BLOCK
1	18.4 MHz LO	A4A5P2-12	B
7	SWITCH	A4A9P1-11	C
2	GND		F
8	GND		F
3	GND		F
9	3MHz	A4A7P2-3	E
4	GND		F
10	-15V		F
5	GND		F
11	+15V		F
6	GND		F
12	21.4 MHz	A4A8P2-6	C

Ⓐ 50 OHM DRIVER
+15VF4, C28 .01, R39 316Ω, Q3, E1, R40 10K, R41 51.1, C29 .01, R42 619
SIGNAL PATH FOR RES BW ≥3kHz
CABLE 87, W34 21.4 MHz -1dBm ±1dB TO A4A6A1 UP CONVERTER
J2

Ⓑ LO DRIVER AND BUFFER AMPLIFIER
+13.1V RES BW ≤1kHz
P1-1 18.4 MHz LO >-10dBm (200mV P-P)
C9 .01, R16 10K, R17 51.1, R18 10K, CR1, +6.4V, Q6, L12 560NH, C14 150pF, C11 .01, R20 2150, R38 5110, Q5, R23 3.16K, -15VF2, R25 2150, C15 .01, R27 464, R28 31.6, R26 51.1, Q2, L4 4.7, C16 .01
18.4 MHz >+6dBm ★2
+13.9V: RES BW ≤1kHz -2.4V: RES BW ≥3kHz

Ⓒ SWITCH
P1-7 SWITCH 0V: RES BW ≤1kHz +14.7V: RES BW ≥3kHz
R22 10K, C13 .01, R15 100K, Q7, ★3 +15VF2
C7 .01, R12 3160, R13 3160, C8 .01, CR5, CR3, +6.1V, L1 3.3
P1-12 21.4 MHz, C2 .01, ★4 21.4 MHz +5dBm (1120mV P-P) (-15dBm FOR RES BW ≤1kHz)

Ⓓ MIXER/DRIVER
SIGNAL PATH FOR RES BW ≤1kHz
+15VF2, 21.4 MHz -15dBm (1120 mV P-P) ★1
R14 51.1, E2, Q1, C12 .01, T1, R19 619, L11 .22, C30 270pF
-27dBm ★A, U1, 3MHZ -32dBm ★B

Ⓔ 3MHz BANDPASS AMPLIFIER
+15VF1, R29 464, R31 100, C21 300pF, L10 10, E4, Q8, C22 82pF, L5 33, R52 1000, P1-9 3MHz -15dBm (110mV P-P)
E3, Q4, C20 .01, R32 422, R30 3160, R33* 56.2 (SEE NOTE 3), -16VF1

Ⓕ POWER SUPPLIES
P1-11 +15V, L8 4.7, C23 .01, C18 0.1, R24 10, C10 .01, R11 10, R4 1960, C27 .01, R50 10, VR1 6.19V, C4 .01
+15VF1, +15VF2, +15VF3, +15VF4, +6.1V
P1-2-6,8 GND
P1-10 -15V, L9 4.7, C24 .01, C19 0.1, R35 10, C17 .01
-15VF1, -15VF2

IF OUT J12 — W34 — IF INP J13 — W37 — W33 — B7 — B9 — J1

A4A6A
85662

P1

PIN	SIGNAL
1	21.4MHz
7	GND
2	GND
8	GND
3	GND
9	3MHz
4	GND
10	GND
5	GND
11	SWITCH
6	18.4MHz LO
12	+15V

IAL PREFIX: 2403A

-DISPLAY SECTION

4A6A1 UP CONVERTER
5662-60006

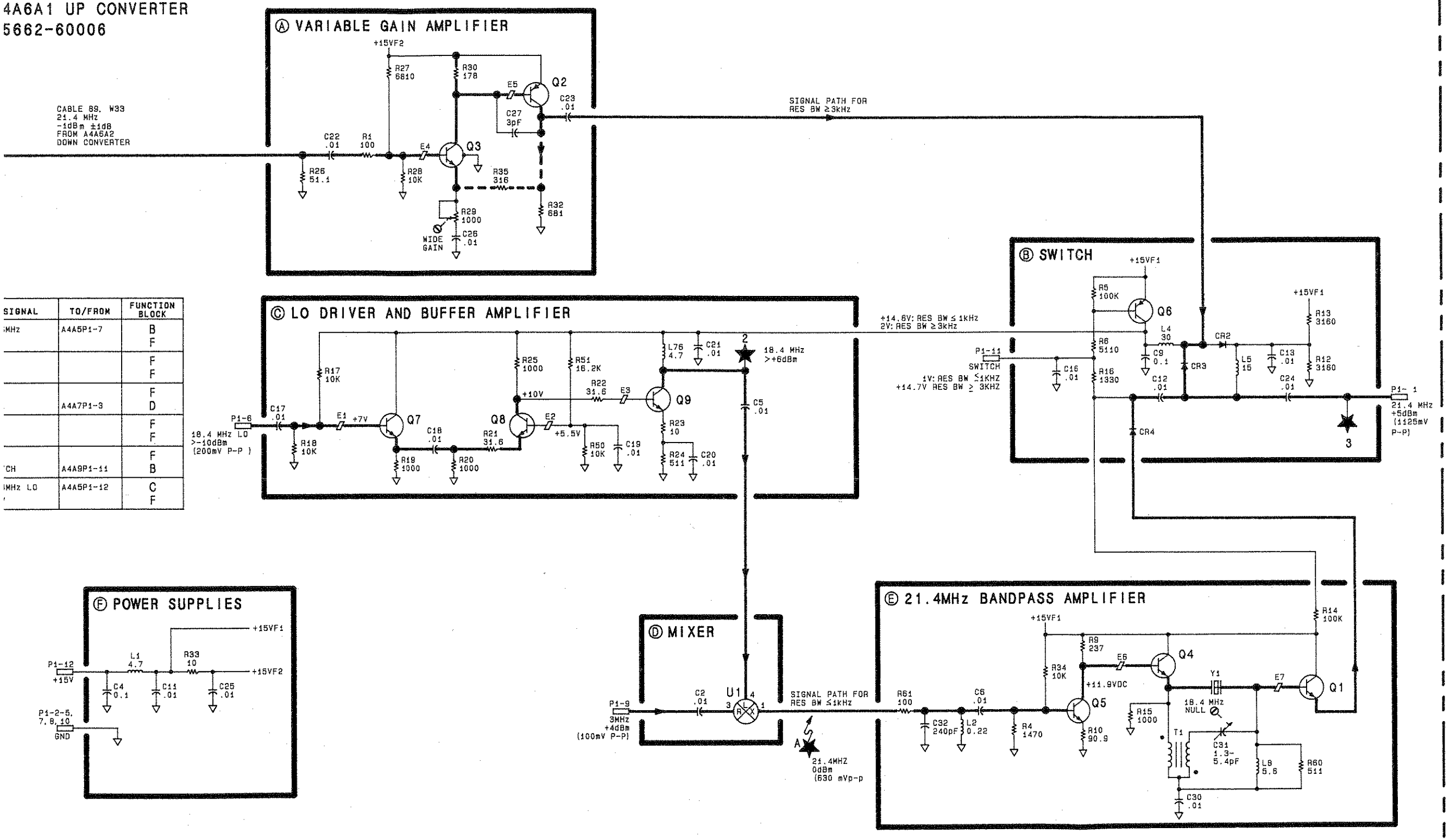

SIGNAL	TO/FROM	FUNCTION BLOCK
MHz	A4A5P1-7	B F
		F F
	A4A7P1-3	F D
		F F
CH	A4A9P1-11	F B
MHz LO	A4A5P1-12	C F

NOTES:

1. REFERENCE DESIGNATORS WITHIN THIS ASSEMBLY ARE ABBREVIATED. FOR COMPLETE REFERENCE DESIGNATION, PREFIX ABBREVIATION WITH ASSEMBLY DESIGNATION.
2. UNLESS OTHERWISE INDICATED: RESISTANCE IS IN OHMS (Ω) CAPACITANCE IS IN MICROFARADS (μF) INDUCTANCE IS IN MICROHENRIES (μH)
3. ASTERISK (*) INDICATES FACTORY SELECTED COMPONENT; TYPICAL VALUE IS SHOWN.
4. UNLESS OTHERWISE NOTED INSTRUMENT SETTINGS ARE AS FOLLOWS:
   INSTRUMENT PRESET
   CENTER FREQUENCY.....CAL. OUT FREQ.
   FREQUENCY SPAN.....0Hz
   ATTENUATION.....0dB
5. ALL MEASURMENTS ARE WITH BOARDS ON EXTENDERS. POWER LEVELS MAY VARY ±2dB UNLESS OTHERWISE INDICATED. RF VOLTAGES MAY VARY ±25%.
6. A4A6A1U1 AND A4A6A2 U1 PIN CONFIGURATION:

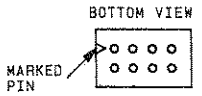

7. UNLESS OTHERWISE INDICATED: SIGNALS ENTER AT LEFT SIDE OR TOP AND EXIT AT RIGHT OR BOTTOM SIDE OF FUNCTION BLOCKS.
8. **POWER MEASUREMENTS ARE TAKEN WITH A SPECTRUM ANALYZER USING A HIGH IMPEDANCE PROBE.**

A4A6

FIGURE 5. A4A6A2 DOWN CONVERTER AND A4A6A1 UP CONVERTER, SCHEMATIC DIAGRAM

A4A7 3 MHz BANDWIDTH FILTER, CIRCUIT DESCRIPTION

A4A7 3 MHz Filter is a variable bandwidth filter centered at 3 MHz. The bandwidths are controlled from 10 Hz to 300 Hz in a 1, 3, 10 sequence by lines that have the same name as the bandwidth they activate. When none of the lines is activated, the filter has a 1 kHz bandwidth.

The filter has five poles which are almost identical. Only one is described in detail. Each pole has a negative output impedance to compensate for the series resistance of the crystal, but it is adjustable in only two poles.

4th Pole (D)

The basis of the buffer amplifier is a complementary feedback pair including Q9 and Q10 (see Figure 1).

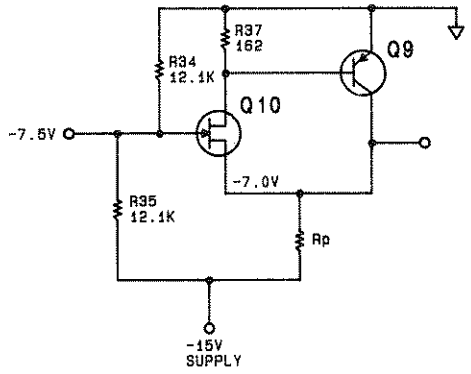

FIGURE 1. COMPLEMENTARY FEEDBACK PAIR, SIMPLIFIED SCHEMATIC

The bias current through Q10 is $0.7V/162\Omega \approx 4$ mA, and the total current through Q10 plus Q9 is set by R_p to be about 20 mA. The source voltage of Q10 should always be higher than the gate voltage.

The circuit as shown in Figure 1 has no gain. R39, R36, and C26 are added (see schematic) so this stage has a gain of:

$$G = 1 + \frac{R38}{R36} \approx 1\ \text{dB}$$

R_p is replaced by a 20 mA current sink (see Figure 2).

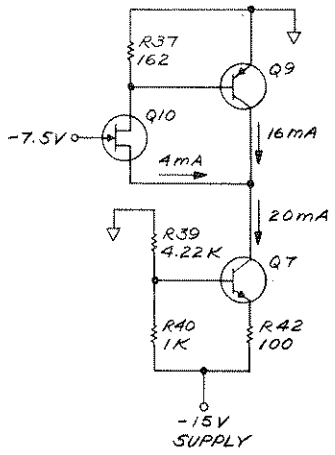

FIGURE 2. COMPLEMENTARY PAIR WITH CURRENT SINK

The description to this point is sufficient to understand how the circuit is biased. The 3 MHz operation is described in the following paragraphs.

Potentiometer R41 is added and the signal from the collector of Q9 is fed into the base of Q7 by C28 (see Figure 3).

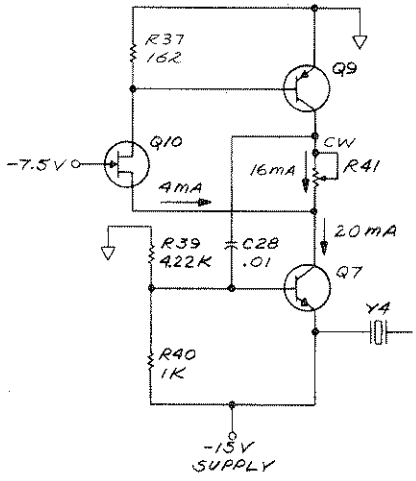

FIGURE 3. BUFFER AMPLIFIER WITH NEGATIVE OUTPUT IMPEDANCE

The circuit still operates the same because there is no load on the emitter of Q7 and hence no collector current (Remember, this is 3 MHz AC operation). If a load (Y4) is added to the emitter of Q7, collector current is developed and this current is fed back into the complementary pair Q9, Q10. The sense of this current is such that the feedback is positive. The more load, the more positive feedback is developed. The more positive feedback, the more gain the amplifier has. This implies negative output impedance. The magnitude of the negative output impedance is the resistance to which R41 is set.

Now the circuit can be completed.

Q8 and the SYM cap (Figure 4) are added to cancel the effect of the case (parallel) capacitance of the crystal. R94, R96 and other resistors are switched in to change bandwidths. C31 and C62 (not shown) are in series with the crystal to tune the center frequency to precisely 3 MHz. The negative output impedances of the amplifier is set to compensate for the series resistance of the crystal so that as different bandwidths are selected, the amplitude (overall gain) does not change. If the relative gain of the filter assembly is too low in the 10 Hz BW, and cannot be corrected by R41 and R30, three common problems are:

- All five crystals are not tuned close enough to the same center frequency.
- The series resistance of one or more of the crystals is too high.
- The output impedance of one or more of the buffer amplifiers is not negative enough.

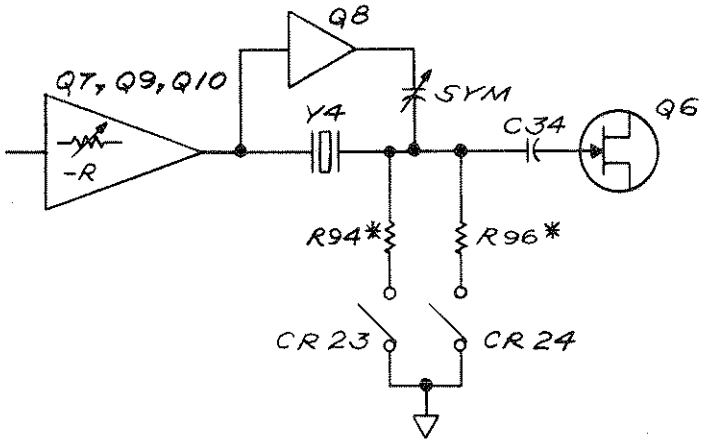

FIGURE 4. FOURTH POLE, EQUIVALENT CIRCUIT

TABLE 1. A4A7, REPLACEABLE PARTS (1 OF 4)

Reference Designation	HP Part Number	CD	Qty	Description	Mfr Code	Mfr Part Number
A4A7	85662-60004	4	1	BOARD ASSEMBLY, 3MHZ BANDWIDTH FILTER	28480	85662-60004
A4A7C1	0160-2055	9	37	CAPACITOR-FXD .01UF +80-20% 100VDC CER	28480	0160-2055
A4A7C2	0160-2266	4	1	CAPACITOR-FXD 24PF +-5% 500VDC CER 0+-30	28480	0160-2266
A4A7C3	0160-2055	9		CAPACITOR-FXD .01UF +80-20% 100VDC CER	28480	0160-2055
A4A7C4	0160-2250	6	8	CAPACITOR-FXD 5.1PF +-.25PF 500VDC CER	28480	0160-2250
A4A7C5*	0160-4611	7	5	CAPACITOR-FXD 68PF +-1% 300VDC MICA	28480	0160-4611
A4A7C6	0121-0446	6	5	CAPACITOR-V TRMR-CER 4.5-20PF 160V	28480	0121-0446
A4A7C7	0121-0105	4	5	CAPACITOR-V TRMR-CER 9-35PF 200V PC-MTG	52763	304324 9/35PF N650
A4A7C8	0160-2055	9		CAPACITOR-FXD .01UF +80-20% 100VDC CER	28480	0160-2055
A4A7C9	0160-2055	9		CAPACITOR-FXD .01UF +80-20% 100VDC CER	28480	0160-2055
A4A7C10	0160-2055	9		CAPACITOR-FXD .01UF +80-20% 100VDC CER	28480	0160-2055
A4A7C11	0160-2250	6		CAPACITOR-FXD 5.1PF +-.25PF 500VDC CER	28480	0160-2250
A4A7C12*	0160-4611	7		CAPACITOR-FXD 68PF +-1% 300VDC MICA	28480	0160-4611
A4A7C13	0121-0493	3	4	CAPACITOR-V TRMR-AIR 1.7-11PF 175V	74970	187-0306-125
A4A7C14	0121-0446	6		CAPACITOR-V TRMR-CER 4.5-20PF 160V	28480	0121-0446
A4A7C15	0121-0105	4		CAPACITOR-V TRMR-CER 9-35PF 200V PC-MTG	52763	304324 9/35PF N650
A4A7C16	0160-2055	9		CAPACITOR-FXD .01UF +80-20% 100VDC CER	28480	0160-2055
A4A7C17	0160-2055	9		CAPACITOR-FXD .01UF +80-20% 100VDC CER	28480	0160-2055
A4A7C18	0160-2250	6		CAPACITOR-FXD 5.1PF +-.25PF 500VDC CER	28480	0160-2250
A4A7C19	0160-2250	6		CAPACITOR-FXD 5.1PF +-.25PF 500VDC CER	28480	0160-2250
A4A7C20	0160-2055	9		CAPACITOR-FXD .01UF +80-20% 100VDC CER	28480	0160-2055
A4A7C21*	0160-4611	7		CAPACITOR-FXD 68PF +-1% 300VDC MICA	28480	0160-4611
A4A7C22	0121-0493	3		CAPACITOR-V TRMR-AIR 1.7-11PF 175V	74970	187-0306-125
A4A7C23	0121-0446	6		CAPACITOR-V TRMR-CER 4.5-20PF 160V	28480	0121-0446
A4A7C24	0121-0105	4		CAPACITOR-V TRMR-CER 9-35PF 200V PC-MTG	52763	304324 9/35PF N650
A4A7C25	0160-2055	9		CAPACITOR-FXD .01UF +80-20% 100VDC CER	28480	0160-2055
A4A7C26	0160-2055	9		CAPACITOR-FXD .01UF +80-20% 100VDC CER	28480	0160-2055
A4A7C27	0160-2250	6		CAPACITOR-FXD 5.1PF +-.25PF 500VDC CER	28480	0160-2250
A4A7C28	0160-2055	9		CAPACITOR-FXD .01UF +80-20% 100VDC CER	28480	0160-2055
A4A7C29	0160-2250	6		CAPACITOR-FXD 5.1PF +-.25PF 500VDC CER	28480	0160-2250
A4A7C30*	0160-4611	7		CAPACITOR-FXD 68PF +-1% 300VDC MICA	28480	0160-4611
A4A7C31	0121-0493	3		CAPACITOR-V TRMR-AIR 1.7-11PF 175V	74970	187-0306-125
A4A7C32	0121-0446	6		CAPACITOR-V TRMR-CER 4.5-20PF 160V	28480	0121-0446
A4A7C33	0121-0105	4		CAPACITOR-V TRMR-CER 9-35PF 200V PC-MTG	52763	304324 9/35PF N650
A4A7C34	0160-2055	9		CAPACITOR-FXD .01UF +80-20% 100VDC CER	28480	0160-2055
A4A7C35	0160-2055	9		CAPACITOR-FXD .01UF +80-20% 100VDC CER	28480	0160-2055
A4A7C36	0160-2250	6		CAPACITOR-FXD 5.1PF +-.25PF 500VDC CER	28480	0160-2250
A4A7C37	0160-2055	9		CAPACITOR-FXD .01UF +80-20% 100VDC CER	28480	0160-2055
A4A7C38	0160-2250	6		CAPACITOR-FXD 5.1PF +-.25PF 500VDC CER	28480	0160-2250
A4A7C39*	0160-4611	7		CAPACITOR-FXD 68PF +-1% 300VDC MICA	28480	0160-4611
A4A7C40	0121-0493	3		CAPACITOR-V TRMR-AIR 1.7-11PF 175V	74970	187-0306-125
A4A7C41	0121-0446	6		CAPACITOR-V TRMR-CER 4.5-20PF 160V	28480	0121-0446
A4A7C42	0121-0105	4		CAPACITOR-V TRMR-CER 9-35PF 200V PC-MTG	52763	304324 9/35PF N650
A4A7C43	0160-2055	9		CAPACITOR-FXD .01UF +80-20% 100VDC CER	28480	0160-2055
A4A7C44	0160-2244	8	2	CAPACITOR-FXD 3PF +-.25PF 500VDC CER	28480	0160-2244
A4A7C45	0160-2055	9		CAPACITOR-FXD .01UF +80-20% 100VDC CER	28480	0160-2055
A4A7C46	0160-2055	9		CAPACITOR-FXD .01UF +80-20% 100VDC CER	28480	0160-2055
A4A7C47	0160-2244	8		CAPACITOR-FXD 3PF +-.25PF 500VDC CER	28480	0160-2244
A4A7C48	0160-4300	1	14	CAPACITOR-FXD .047UF +80-20% 100VDC CER	56289	C023F101L473ZS22-CDH
A4A7C49	0180-0197	8	6	CAPACITOR-FXD 2.2UF+-10% 20VDC TA	56289	150D225X9020A2
A4A7C50	0180-0197	8		CAPACITOR-FXD 2.2UF+-10% 20VDC TA	56289	150D225X9020A2
A4A7C51	0180-0197	8		CAPACITOR-FXD 2.2UF+-10% 20VDC TA	56289	150D225X9020A2
A4A7C52	0180-0197	8		CAPACITOR-FXD 2.2UF+-10% 20VDC TA	56289	150D225X9020A2
A4A7C53	0180-0197	8		CAPACITOR-FXD 2.2UF+-10% 20VDC TA	56289	150D225X9020A2
A4A7C54	0180-0197	8		CAPACITOR-FXD 2.2UF+-10% 20VDC TA	56289	150D225X9020A2
A4A7C55	0160-2055	9		CAPACITOR-FXD .01UF +80-20% 100VDC CER	28480	0160-2055
A4A7C56	0160-2055	9		CAPACITOR-FXD .01UF +80-20% 100VDC CER	28480	0160-2055
A4A7C57	0160-4300	1		CAPACITOR-FXD .047UF +80-20% 100VDC CER	56289	C023F101L473ZS22-CDH
A4A7C58	0160-4297	5	5	CAPACITOR-FXD .022UF +80-20% 100VDC CER	56289	C023F101H223ZS22-CDH
A4A7C59	0160-2055	9		CAPACITOR-FXD .01UF +80-20% 100VDC CER	28480	0160-2055
A4A7C60	0160-2055	9		CAPACITOR-FXD .01UF +80-20% 100VDC CER	28480	0160-2055
A4A7C61	0160-2055	9		CAPACITOR-FXD .01UF +80-20% 100VDC CER	28480	0160-2055
A4A7C62	0160-2055	9		CAPACITOR-FXD .01UF +80-20% 100VDC CER	28480	0160-2055
A4A7C63	0160-4300	1		CAPACITOR-FXD .047UF +80-20% 100VDC CER	56289	C023F101L473ZS22-CDH
A4A7C64	0160-4297	5		CAPACITOR-FXD .022UF +80-20% 100VDC CER	56289	C023F101H223ZS22-CDH
A4A7C65	0160-2055	9		CAPACITOR-FXD .01UF +80-20% 100VDC CER	28480	0160-2055
A4A7C66	0160-2055	9		CAPACITOR-FXD .01UF +80-20% 100VDC CER	28480	0160-2055
A4A7C67	0160-2055	9		CAPACITOR-FXD .01UF +80-20% 100VDC CER	28480	0160-2055
A4A7C68	0160-2055	9		CAPACITOR-FXD .01UF +80-20% 100VDC CER	28480	0160-2055
A4A7C69	0160-4300	1		CAPACITOR-FXD .047UF +80-20% 100VDC CER	56289	C023F101L473ZS22-CDH
A4A7C70	0160-4297	5		CAPACITOR-FXD .022UF +80-20% 100VDC CER	56289	C023F101H223ZS22-CDH

*Indicates factory selected value

TABLE 1. A4A7, REPLACEABLE PARTS (2 OF 4)

Reference Designation	HP Part Number	C D	Qty	Description	Mfr Code	Mfr Part Number
A4A7C71	0160-2055	9		CAPACITOR-FXD .01UF +80-20% 100VDC CER	28480	0160-2055
A4A7C72	0160-2055	9		CAPACITOR-FXD .01UF +80-20% 100VDC CER	28480	0160-2055
A4A7C73	0160-2055	9		CAPACITOR-FXD .01UF +80-20% 100VDC CER	28480	0160-2055
A4A7C74	0160-2055	9		CAPACITOR-FXD .01UF +80-20% 100VDC CER	28480	0160-2055
A4A7C75	0160-4300	1		CAPACITOR-FXD .047UF +80-20% 100VDC CER	56289	C023F101L473ZS22-CDH
A4A7C76	0160-4297	5		CAPACITOR-FXD .022UF +80-20% 100VDC CER	56289	C023F101H223ZS22-CDH
A4A7C77	0160-2055	9		CAPACITOR-FXD .01UF +80-20% 100VDC CER	28480	0160-2055
A4A7C78	0160-2055	9		CAPACITOR-FXD .01UF +80-20% 100VDC CER	28480	0160-2055
A4A7C79	0160-2055	9		CAPACITOR-FXD .01UF +80-20% 100VDC CER	28480	0160-2055
A4A7C80	0160-2055	9		CAPACITOR-FXD .01UF +80-20% 100VDC CER	28480	0160-2055
A4A7C81	0160-4300	1		CAPACITOR-FXD .047UF +80-20% 100VDC CER	56289	C023F101L473ZS22-CDH
A4A7C82	0160-4297	5		CAPACITOR-FXD .022UF +80-20% 100VDC CER	56289	C023F101H223ZS22-CDH
A4A7C83	0160-2055	9		CAPACITOR-FXD .01UF +80-20% 100VDC CER	28480	0160-2055
A4A7C84	0160-2055	9		CAPACITOR-FXD .01UF +80-20% 100VDC CER	28480	0160-2055
A4A7C85	0160-4300	1		CAPACITOR-FXD .047UF +80-20% 100VDC CER	56289	C023F101L473ZS22-CDH
A4A7C86	0160-4300	1		CAPACITOR-FXD .047UF +80-20% 100VDC CER	56289	C023F101L473ZS22-CDH
A4A7C87	0160-4300	1		CAPACITOR-FXD .047UF +80-20% 100VDC CER	56289	C023F101L473ZS22-CDH
A4A7C88	0160-4300	1		CAPACITOR-FXD .047UF +80-20% 100VDC CER	56289	C023F101L473ZS22-CDH
A4A7C89	0160-4300	1		CAPACITOR-FXD .047UF +80-20% 100VDC CER	56289	C023F101L473ZS22-CDH
A4A7C90	0160-4300	1		CAPACITOR-FXD .047UF +80-20% 100VDC CER	56289	C023F101L473ZS22-CDH
A4A7C91	0160-4300	1		CAPACITOR-FXD .047UF +80-20% 100VDC CER	56289	C023F101L473ZS22-CDH
A4A7C92	0160-4300	1		CAPACITOR-FXD .047UF +80-20% 100VDC CER	56289	C023F101L473ZS22-CDH
A4A7C93*	0160-2252	8	1	CAPACITOR-FXD 6.2PF +-.25PF 500VDC CER	28480	0160-2252
A4A7CR1-A4A7CR30	1901-0040	1	30	DIODE-SWITCHING 30V 50MA 2NS DO-35	28480	1901-0040
A4A7E1	9170-0029	3	22	CORE-SHIELDING BEAD	28480	9170-0029
A4A7E2	9170-0029	3		CORE-SHIELDING BEAD	28480	9170-0029
A4A7E3	9170-0029	3		CORE-SHIELDING BEAD	28480	9170-0029
A4A7E4	9170-0029	3		CORE-SHIELDING BEAD	28480	9170-0029
A4A7E5	9170-0029	3		CORE-SHIELDING BEAD	28480	9170-0029
A4A7E6	9170-0029	3		CORE-SHIELDING BEAD	28480	9170-0029
A4A7E7	9170-0029	3		CORE-SHIELDING BEAD	28480	9170-0029
A4A7E8	9170-0029	3		CORE-SHIELDING BEAD	28480	9170-0029
A4A7E9	9170-0029	3		CORE-SHIELDING BEAD	28480	9170-0029
A4A7E10	9170-0029	3		CORE-SHIELDING BEAD	28480	9170-0029
A4A7E11	9170-0029	3		CORE-SHIELDING BEAD	28480	9170-0029
A4A7E12	9170-0029	3		CORE-SHIELDING BEAD	28480	9170-0029
A4A7E13	9170-0029	3		CORE-SHIELDING BEAD	28480	9170-0029
A4A7E14	9170-0029	3		CORE-SHIELDING BEAD	28480	9170-0029
A4A7E15	9170-0029	3		CORE-SHIELDING BEAD	28480	9170-0029
A4A7E16	9170-0029	3		CORE-SHIELDING BEAD	28480	9170-0029
A4A7E17	9170-0029	3		CORE-SHIELDING BEAD	28480	9170-0029
A4A7E18	9170-0029	3		CORE-SHIELDING BEAD	28480	9170-0029
A4A7E19	9170-0029	3		CORE-SHIELDING BEAD	28480	9170-0029
A4A7E20	9170-0029	3		CORE-SHIELDING BEAD	28480	9170-0029
A4A7E21	9170-0029	3		CORE-SHIELDING BEAD	28480	9170-0029
A4A7E22	9170-0029	3		CORE-SHIELDING BEAD	28480	9170-0029
A4A7L1	9100-1643	2	6	INDUCTOR RF-CH-MLD 300UH 5% .2DX.45LG	28480	9100-1643
A4A7L2	9100-1648	7	5	INDUCTOR RF-CH-MLD 560UH 5% .2DX.45LG	28480	9100-1648
A4A7L3	9100-1629	4	5	INDUCTOR RF-CH-MLD 47UH 5% .166DX.385LG	28480	9100-1629
A4A7L4	9100-1643	2		INDUCTOR RF-CH-MLD 300UH 5% .2DX.45LG	28480	9100-1643
A4A7L5	9100-1648	7		INDUCTOR RF-CH-MLD 560UH 5% .2DX.45LG	28480	9100-1648
A4A7L6	9100-1629	4		INDUCTOR RF-CH-MLD 47UH 5% .166DX.385LG	28480	9100-1629
A4A7L7	9100-1643	2		INDUCTOR RF-CH-MLD 300UH 5% .2DX.45LG	28480	9100-1643
A4A7L8	9100-1648	7		INDUCTOR RF-CH-MLD 560UH 5% .2DX.45LG	28480	9100-1648
A4A7L9	9100-1629	4		INDUCTOR RF-CH-MLD 47UH 5% .166DX.385LG	28480	9100-1629
A4A7L10	9100-1643	2		INDUCTOR RF-CH-MLD 300UH 5% .2DX.45LG	28480	9100-1643
A4A7L11	9100-1648	7		INDUCTOR RF-CH-MLD 560UH 5% .2DX.45LG	28480	9100-1648
A4A7L12	9100-1629	4		INDUCTOR RF-CH-MLD 47UH 5% .166DX.385LG	28480	9100-1629
A4A7L13	9100-1643	2		INDUCTOR RF-CH-MLD 300UH 5% .2DX.45LG	28480	9100-1643
A4A7L14	9100-1648	7		INDUCTOR RF-CH-MLD 560UH 5% .2DX.45LG	28480	9100-1648
A4A7L15	9100-1629	4		INDUCTOR RF-CH-MLD 47UH 5% .166DX.385LG	28480	9100-1629
A4A7L16	9100-1643	2		INDUCTOR RF-CH-MLD 300UH 5% .2DX.45LG	28480	9100-1643
A4A7L17	9140-0114	4	6	INDUCTOR RF-CH-MLD 10UH 10% .166DX.385LG	28480	9140-0114
A4A7L18	9140-0114	4		INDUCTOR RF-CH-MLD 10UH 10% .166DX.385LG	28480	9140-0114
A4A7L19	9140-0114	4		INDUCTOR RF-CH-MLD 10UH 10% .166DX.385LG	28480	9140-0114
A4A7L20	9140-0114	4		INDUCTOR RF-CH-MLD 10UH 10% .166DX.385LG	28480	9140-0114
A4A7L21	9140-0114	4		INDUCTOR RF-CH-MLD 10UH 10% .166DX.385LG	28480	9140-0114
A4A7L22	9140-0114	4		INDUCTOR RF-CH-MLD 10UH 10% .166DX.385LG	28480	9140-0114
A4A7Q1	1853-0034	0	6	TRANSISTOR PNP SI TO-18 PD=360MW	28480	1853-0034
A4A7Q2	1855-0081	1	5	TRANSISTOR J-FET N-CHAN D-MODE SI	28480	1855-0081
A4A7Q3	1854-0882	8	5	TRANSISTOR NPN PD=300MW FT=200MHZ	28480	1854-0882
A4A7Q4	1854-0023	9	5	TRANSISTOR NPN SI TO-18 PD=360MW	28480	1854-0023
A4A7Q5	1853-0034	0		TRANSISTOR PNP SI TO-18 PD=360MW	28480	1853-0034

*Indicates factory selected value

TABLE 1. A4A7, REPLACEABLE PARTS (3 OF 4)

Reference Designation	HP Part Number	C D	Qty	Description	Mfr Code	Mfr Part Number
A4A7Q6	1855-0081	1		TRANSISTOR J-FET N-CHAN D-MODE SI	28480	1855-0081
A4A7Q7	1854-0882	8		TRANSISTOR NPN PD=300MW FT=200MHZ	28480	1854-0882
A4A7Q8	1854-0023	9		TRANSISTOR NPN SI TO-18 PD=360MW	28480	1854-0023
A4A7Q9	1853-0034	0		TRANSISTOR PNP SI TO-18 PD=360MW	28480	1853-0034
A4A7Q10	1855-0081	1		TRANSISTOR J-FET N-CHAN D-MODE SI	28480	1855-0081
A4A7Q11	1854-0882	8		TRANSISTOR NPN PD=300MW FT=200MHZ	28480	1854-0882
A4A7Q12	1854-0023	9		TRANSISTOR NPN SI TO-18 PD=360MW	28480	1854-0023
A4A7Q13	1853-0034	0		TRANSISTOR PNP SI TO-18 PD=360MW	28480	1853-0034
A4A7Q14	1855-0081	1		TRANSISTOR J-FET N-CHAN D-MODE SI	28480	1855-0081
A4A7Q15	1854-0882	8		TRANSISTOR NPN PD=300MW FT=200MHZ	28480	1854-0882
A4A7Q16	1854-0023	9		TRANSISTOR NPN SI TO-18 PD=360MW	28480	1854-0023
A4A7Q17	1853-0034	0		TRANSISTOR PNP SI TO-18 PD=360MW	28480	1853-0034
A4A7Q18	1855-0081	1		TRANSISTOR J-FET N-CHAN D-MODE SI	28480	1855-0081
A4A7Q19	1854-0023	9		TRANSISTOR NPN SI TO-18 PD=360MW	28480	1854-0023
A4A7Q20	1854-0882	8		TRANSISTOR NPN PD=300MW FT=200MHZ	28480	1854-0882
A4A7Q21	1853-0034	0		TRANSISTOR PNP SI TO-18 PD=360MW	28480	1853-0034
A4A7Q22	1854-0345	8	1	TRANSISTOR NPN 2N5179 SI TO-72 PD=200MW	04713	2N5179
A4A7R1	0757-0441	8	1	RESISTOR 8.25K 1% .125W F TC=0+-100	24546	C4-1/8-T0-8251-F
A4A7R2	0757-0442	9	1	RESISTOR 10K 1% .125W F TC=0+-100	24546	C4-1/8-T0-1002-F
A4A7R3	0757-0346	2	4	RESISTOR 10 1% .125W F TC=0+-100	24546	C4-1/8-T0-10R0-F
A4A7R4	0757-0401	0	9	RESISTOR 100 1% .125W F TC=0+-100	24546	C4-1/8-T0-101-F
A4A7R5	0757-0394	0		RESISTOR 51.1 1% .125W F TC=0+-100	24546	C4-1/8-T0-51R1-F
A4A7R6	0698-3154	0	5	RESISTOR 4.22K 1% .125W F TC=0+-100	24546	C4-1/8-T0-4221-F
A4A7R7	0757-0280	3	5	RESISTOR 1K 1% .125W F TC=0+-100	24546	C4-1/8-T0-1001-F
A4A7R8	0757-0346	2		RESISTOR 10 1% .125W F TC=0+-100	24546	C4-1/8-T0-10R0-F
A4A7R9	0757-0397	3	1	RESISTOR 68.1 1% .125W F TC=0+-100	24546	C4-1/8-T0-68R1-F
A4A7R10	0698-3447	4	6	RESISTOR 422 1% .125W F TC=0+-100	24546	C4-1/8-T0-422R-F
A4A7R11	0757-0420	3	5	RESISTOR 750 1% .125W F TC=0+-100	24546	C4-1/8-T0-751-F
A4A7R12*	0757-0444	1	8	RESISTOR 12.1K 1% .125W F TC=0+-100	24546	C4-1/8-T0-1212-F
A4A7R13*	0757-0444	1		RESISTOR 12.1K 1% .125W F TC=0+-100	24546	C4-1/8-T0-1212-F
A4A7R14	0757-0401	0		RESISTOR 100 1% .125W F TC=0+-100	24546	C4-1/8-T0-101-F
A4A7R15	0757-0405	4	5	RESISTOR 162 1% .125W F TC=0+-100	24546	C4-1/8-T0-162R-F
A4A7R16	0757-0394	0		RESISTOR 51.1 1% .125W F TC=0+-100	24546	C4-1/8-T0-51R1-F
A4A7R17	0698-3154	0		RESISTOR 4.22K 1% .125W F TC=0+-100	24546	C4-1/8-T0-4221-F
A4A7R18	0757-0280	3		RESISTOR 1K 1% .125W F TC=0+-100	24546	C4-1/8-T0-1001-F
A4A7R19	0757-0346	2		RESISTOR 10 1% .125W F TC=0+-100	24546	C4-1/8-T0-10R0-F
A4A7R20	0757-0401	0		RESISTOR 100 1% .125W F TC=0+-100	24546	C4-1/8-T0-101-F
A4A7R21	0698-3447	4		RESISTOR 422 1% .125W F TC=0+-100	24546	C4-1/8-T0-422R-F
A4A7R22	0757-0420	3		RESISTOR 750 1% .125W F TC=0+-100	24546	C4-1/8-T0-751-F
A4A7R23	0757-0444	1		RESISTOR 12.1K 1% .125W F TC=0+-100	24546	C4-1/8-T0-1212-F
A4A7R24*	0757-0444	1		RESISTOR 12.1K 1% .125W F TC=0+-100	24546	C4-1/8-T0-1212-F
A4A7R25	0757-0416	7		RESISTOR 511 1% .125W F TC=0+-100	24546	C4-1/8-T0-511R-F
A4A7R26	0757-0405	4		RESISTOR 162 1% .125W F TC=0+-100	24546	C4-1/8-T0-162R-F
A4A7R27	0757-0394	0		RESISTOR 51.1 1% .125W F TC=0+-100	24546	C4-1/8-T0-51R1-F
A4A7R28	0698-3154	0		RESISTOR 4.22K 1% .125W F TC=0+-100	24546	C4-1/8-T0-4221-F
A4A7R29	0757-0280	3		RESISTOR 1K 1% .125W F TC=0+-100	24546	C4-1/8-T0-1001-F
A4A7R30	2100-3426	6	2	RESISTOR-TRMR 20 10% C SIDE-ADJ 1-TRN	28480	2100-3426
A4A7R31	0757-0401	0		RESISTOR 100 1% .125W F TC=0+-100	24546	C4-1/8-T0-101-F
A4A7R32	0698-3447	4		RESISTOR 422 1% .125W F TC=0+-100	24546	C4-1/8-T0-422R-F
A4A7R33	0757-0420	3		RESISTOR 750 1% .125W F TC=0+-100	24546	C4-1/8-T0-751-F
A4A7R34*	0757-0444	1		RESISTOR 12.1K 1% .125W F TC=0+-100	24546	C4-1/8-T0-1212-F
A4A7R35*	0757-0444	1		RESISTOR 12.1K 1% .125W F TC=0+-100	24546	C4-1/8-T0-1212-F
A4A7R36	0757-0416	7		RESISTOR 511 1% .125W F TC=0+-100	24546	C4-1/8-T0-511R-F
A4A7R37	0757-0405	4		RESISTOR 162 1% .125W F TC=0+-100	24546	C4-1/8-T0-162R-F
A4A7R38	0757-0394	0		RESISTOR 51.1 1% .125W F TC=0+-100	24546	C4-1/8-T0-51R1-F
A4A7R39	0698-3154	0		RESISTOR 4.22K 1% .125W F TC=0+-100	24546	C4-1/8-T0-4221-F
A4A7R40	0757-0280	3		RESISTOR 1K 1% .125W F TC=0+-100	24546	C4-1/8-T0-1001-F
A4A7R41	2100-3426	6		RESISTOR-TRMR 20 10% C SIDE-ADJ 1-TRN	28480	2100-3426
A4A7R42	0757-0401	0		RESISTOR 100 1% .125W F TC=0+-100	24546	C4-1/8-T0-101-F
A4A7R43	0698-3447	4		RESISTOR 422 1% .125W F TC=0+-100	24546	C4-1/8-T0-422R-F
A4A7R44	0757-0420	3		RESISTOR 750 1% .125W F TC=0+-100	24546	C4-1/8-T0-751-F
A4A7R45*	0757-0444	1		RESISTOR 12.1K 1% .125W F TC=0+-100	24546	C4-1/8-T0-1212-F
A4A7R46*	0757-0444	1		RESISTOR 12.1K 1% .125W F TC=0+-100	24546	C4-1/8-T0-1212-F
A4A7R47	0757-0416	7		RESISTOR 511 1% .125W F TC=0+-100	24546	C4-1/8-T0-511R-F
A4A7R48	0757-0405	4		RESISTOR 162 1% .125W F TC=0+-100	24546	C4-1/8-T0-162R-F
A4A7R49	0757-0394	0		RESISTOR 51.1 1% .125W F TC=0+-100	24546	C4-1/8-T0-51R1-F
A4A7R50	0698-3154	0		RESISTOR 4.22K 1% .125W F TC=0+-100	24546	C4-1/8-T0-4221-F
A4A7R51	0757-0280	3		RESISTOR 1K 1% .125W F TC=0+-100	24546	C4-1/8-T0-1001-F
A4A7R52	0757-0346	2		RESISTOR 10 1% .125W F TC=0+-100	24546	C4-1/8-T0-10R0-F
A4A7R53	0757-0401	0		RESISTOR 100 1% .125W F TC=0+-100	24546	C4-1/8-T0-101-F
A4A7R54	0698-3447	4		RESISTOR 422 1% .125W F TC=0+-100	24546	C4-1/8-T0-422R-F
A4A7R55	0757-0420	3		RESISTOR 750 1% .125W F TC=0+-100	24546	C4-1/8-T0-751-F
A4A7R56*	0757-0289	2	2	RESISTOR 13.3K 1% .125W F TC=0+-100	19701	MF4C1/8-T0-1332-F
A4A7R57*	0757-0289	2		RESISTOR 13.3K 1% .125W F TC=0+-100	19701	MF4C1/8-T0-1332-F
A4A7R58	0757-0405	4		RESISTOR 162 1% .125W F TC=0+-100	24546	C4-1/8-T0-162R-F
A4A7R59	0698-3438	3	1	RESISTOR 147 1% .125W F TC=0+-100	24546	C4-1/8-T0-147R-F
A4A7R60*	0698-4037	0	1	RESISTOR 46.4 1% .125W F TC=0+-100	24546	C4-1/8-T0-46R4-F

*Indicates factory selected value

TABLE 1. A4A7, REPLACEABLE PARTS (4 OF 4)

Reference Designation	HP Part Number	C D	Qty	Description	Mfr Code	Mfr Part Number
A4A7R61	0698-3447	4		RESISTOR 422 1% .125W F TC=0+-100	24546	C4-1/8-T0-422R-F
A4A7R62	0698-3435	0	1	RESISTOR 38.3 1% .125W F TC=0+-100	24546	C4-1/8-T0-38R3-F
A4A7R63	0757-0401	0		RESISTOR 100 1% .125W F TC=0+-100	24546	C4-1/8-T0-101-F
A4A7R64	0757-0401	0		RESISTOR 100 1% .125W F TC=0+-100	24546	C4-1/8-T0-101-F
A4A7R65	0757-0401	0		RESISTOR 100 1% .125W F TC=0+-100	24546	C4-1/8-T0-101-F
A4A7R66*	0757-0395	1	4	RESISTOR 56.2 1% .125W F TC=0+-100	24546	C4-1/8-T0-56R2-F
A4A7R67	0698-3443	0	5	RESISTOR 287 1% .125W F TC=0+-100	24546	C4-1/8-T0-287R-F
A4A7R68*	0698-3437	2	5	RESISTOR 133 1% .125W F TC=0+-100	24546	C4-1/8-T0-133R-F
A4A7R69	0698-0082	7	5	RESISTOR 464 1% .125W F TC=0+-100	24546	C4-1/8-T0-4640-F
A4A7R70*	0757-0416	7	18	RESISTOR 511 1% .125W F TC=0+-100	24546	C4-1/8-T0-511R-F
A4A7R71	0757-0416	7		RESISTOR 511 1% .125W F TC=0+-100	24546	C4-1/8-T0-511R-F
A4A7R72*	0698-0083	8	5	RESISTOR 1.96K 1% .125W F TC=0+-100	24546	C4-1/8-T0-1961-F
A4A7R73	0757-0416	7		RESISTOR 511 1% .125W F TC=0+-100	24546	C4-1/8-T0-511R-F
A4A7R74*	0757-0395	1		RESISTOR 56.2 1% .125W F TC=0+-100	24546	C4-1/8-T0-56R2-F
A4A7R75	0698-3443	0		RESISTOR 287 1% .125W F TC=0+-100	24546	C4-1/8-T0-287R-F
A4A7R76*	0698-3437	2		RESISTOR 133 1% .125W F TC=0+-100	24546	C4-1/8-T0-133R-F
A4A7R77	0698-0082	7		RESISTOR 464 1% .125W F TC=0+-100	24546	C4-1/8-T0-4640-F
A4A7R78*	0757-0416	7		RESISTOR 511 1% .125W F TC=0+-100	24546	C4-1/8-T0-511R-F
A4A7R79	0757-0416	7		RESISTOR 511 1% .125W F TC=0+-100	24546	C4-1/8-T0-511R-F
A4A7R80*	0698-0083	8		RESISTOR 1.96K 1% .125W F TC=0+-100	24546	C4-1/8-T0-1961-F
A4A7R81	0757-0416	7		RESISTOR 511 1% .125W F TC=0+-100	24546	C4-1/8-T0-511R-F
A4A7R82*	0757-0395	1		RESISTOR 56.2 1% .125W F TC=0+-100	24546	C4-1/8-T0-56R2-F
A4A7R83	0698-3443	0		RESISTOR 287 1% .125W F TC=0+-100	24546	C4-1/8-T0-287R-F
A4A7R84*	0698-3437	2		RESISTOR 133 1% .125W F TC=0+-100	24546	C4-1/8-T0-133R-F
A4A7R85	0698-0082	7		RESISTOR 464 1% .125W F TC=0+-100	24546	C4-1/8-T0-4640-F
A4A7R86*	0757-0416	7		RESISTOR 511 1% .125W F TC=0+-100	24546	C4-1/8-T0-511R-F
A4A7R87	0757-0416	7		RESISTOR 511 1% .125W F TC=0+-100	24546	C4-1/8-T0-511R-F
A4A7R88*	0698-0083	8		RESISTOR 1.96K 1% .125W F TC=0+-100	24546	C4-1/8-T0-1961-F
A4A7R89	0757-0416	7		RESISTOR 511 1% .125W F TC=0+-100	24546	C4-1/8-T0-511R-F
A4A7R90*	0757-0395	1		RESISTOR 56.2 1% .125W F TC=0+-100	24546	C4-1/8-T0-56R2-F
A4A7R91	0698-3443	0		RESISTOR 287 1% .125W F TC=0+-100	24546	C4-1/8-T0-287R-F
A4A7R92*	0698-3437	2		RESISTOR 133 1% .125W F TC=0+-100	24546	C4-1/8-T0-133R-F
A4A7R93	0698-0082	7		RESISTOR 464 1% .125W F TC=0+-100	24546	C4-1/8-T0-4640-F
A4A7R94*	0757-0416	7		RESISTOR 511 1% .125W F TC=0+-100	24546	C4-1/8-T0-511R-F
A4A7R95	0757-0416	7		RESISTOR 511 1% .125W F TC=0+-100	24546	C4-1/8-T0-511R-F
A4A7R96*	0698-0083	8		RESISTOR 1.96K 1% .125W F TC=0+-100	24546	C4-1/8-T0-1961-F
A4A7R97	0757-0416	7		RESISTOR 511 1% .125W F TC=0+-100	24546	C4-1/8-T0-511R-F
A4A7R98*	0757-0394	0	6	RESISTOR 51.1 1% .125W F TC=0+-100	24546	C4-1/8-T0-51R1-F
A4A7R99	0698-3443	0		RESISTOR 287 1% .125W F TC=0+-100	24546	C4-1/8-T0-287R-F
A4A7R100*	0698-3437	2		RESISTOR 133 1% .125W F TC=0+-100	24546	C4-1/8-T0-133R-F
A4A7R101	0698-0082	7		RESISTOR 464 1% .125W F TC=0+-100	24546	C4-1/8-T0-4640-F
A4A7R102*	0757-0416	7		RESISTOR 511 1% .125W F TC=0+-100	24546	C4-1/8-T0-511R-F
A4A7R103	0757-0416	7		RESISTOR 511 1% .125W F TC=0+-100	24546	C4-1/8-T0-511R-F
A4A7R104*	0698-0083	8		RESISTOR 1.96K 1% .125W F TC=0+-100	24546	C4-1/8-T0-1961-F
A4A7R105	0757-0416	7		RESISTOR 511 1% .125W F TC=0+-100	24546	C4-1/8-T0-511R-F
A4A7R106	0757-0465	6	4	RESISTOR 100K 1% .125W F TC=0+-100	24546	C4-1/8-T0-1003-F
A4A7R107	0757-0465	6		RESISTOR 100K 1% .125W F TC=0+-100	24546	C4-1/8-T0-1003-F
A4A7R108	0757-0465	6		RESISTOR 100K 1% .125W F TC=0+-100	24546	C4-1/8-T0-1003-F
A4A7R109	0757-0465	6		RESISTOR 100K 1% .125W F TC=0+-100	24546	C4-1/8-T0-1003-F
A4A7TP1	0360-1788	7	10	CONNECTOR-SGL CONT PIN .045-IN-BSC-SZ SQ	28480	0360-1788
A4A7TP2	0360-1788	7		CONNECTOR-SGL CONT PIN .045-IN-BSC-SZ SQ	28480	0360-1788
A4A7TP3	0360-1788	7		CONNECTOR-SGL CONT PIN .045-IN-BSC-SZ SQ	28480	0360-1788
A4A7TP4	0360-1788	7		CONNECTOR-SGL CONT PIN .045-IN-BSC-SZ SQ	28480	0360-1788
A4A7TP5	0360-1788	7		CONNECTOR-SGL CONT PIN .045-IN-BSC-SZ SQ	28480	0360-1788
A4A7TP6	0360-1788	7		CONNECTOR-SGL CONT PIN .045-IN-BSC-SZ SQ	28480	0360-1788
A4A7TP7	0360-1788	7		CONNECTOR-SGL CONT PIN .045-IN-BSC-SZ SQ	28480	0360-1788
A4A7TP8	0360-1788	7		CONNECTOR-SGL CONT PIN .045-IN-BSC-SZ SQ	28480	0360-1788
A4A7TP9	0360-1788	7		CONNECTOR-SGL CONT PIN .045-IN-BSC-SZ SQ	28480	0360-1788
A4A7TP10	0360-1788	7		CONNECTOR-SGL CONT PIN .045-IN-BSC-SZ SQ	28480	0360-1788
A4A7Y1	0410-0404	9	5	CRYSTAL-QUARTZ MATCHED SET OF 5	28480	0410-0404
A4A7Y2	0410-0404	9		CRYSTAL-QUARTZ MATCHED SET OF 5	28480	0410-0404
A4A7Y3	0410-0404	9		CRYSTAL-QUARTZ MATCHED SET OF 5	28480	0410-0404
A4A7Y4	0410-0404	9		CRYSTAL-QUARTZ MATCHED SET OF 5	28480	0410-0404
A4A7Y5	0410-0404	9		CRYSTAL-QUARTZ MATCHED SET OF 5	28480	0410-0404
				MISCELLANEOUS PARTS		
	6960-0069	3	4	PLUG-HOLE CNCL-HD FOR .125-D-HOLE NYL	28480	6960-0069
	85662-20034	6	1	COVER 3MHZ BW FILTER	28480	85662-20034

*Indicates factory selected value

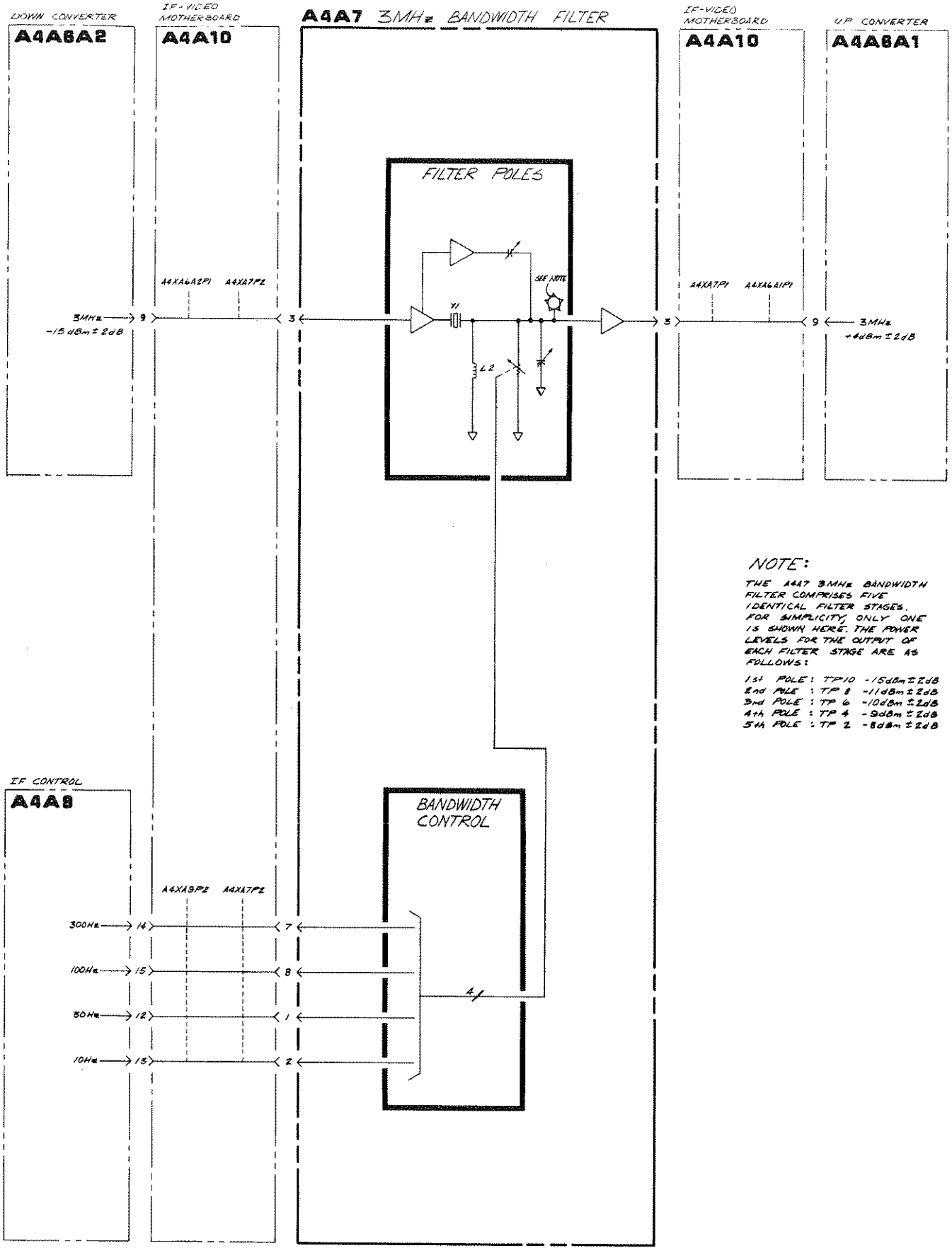

FIGURE 5. A4A7 3 MHz BANDWIDTH FILTER, BLOCK DIAGRAM

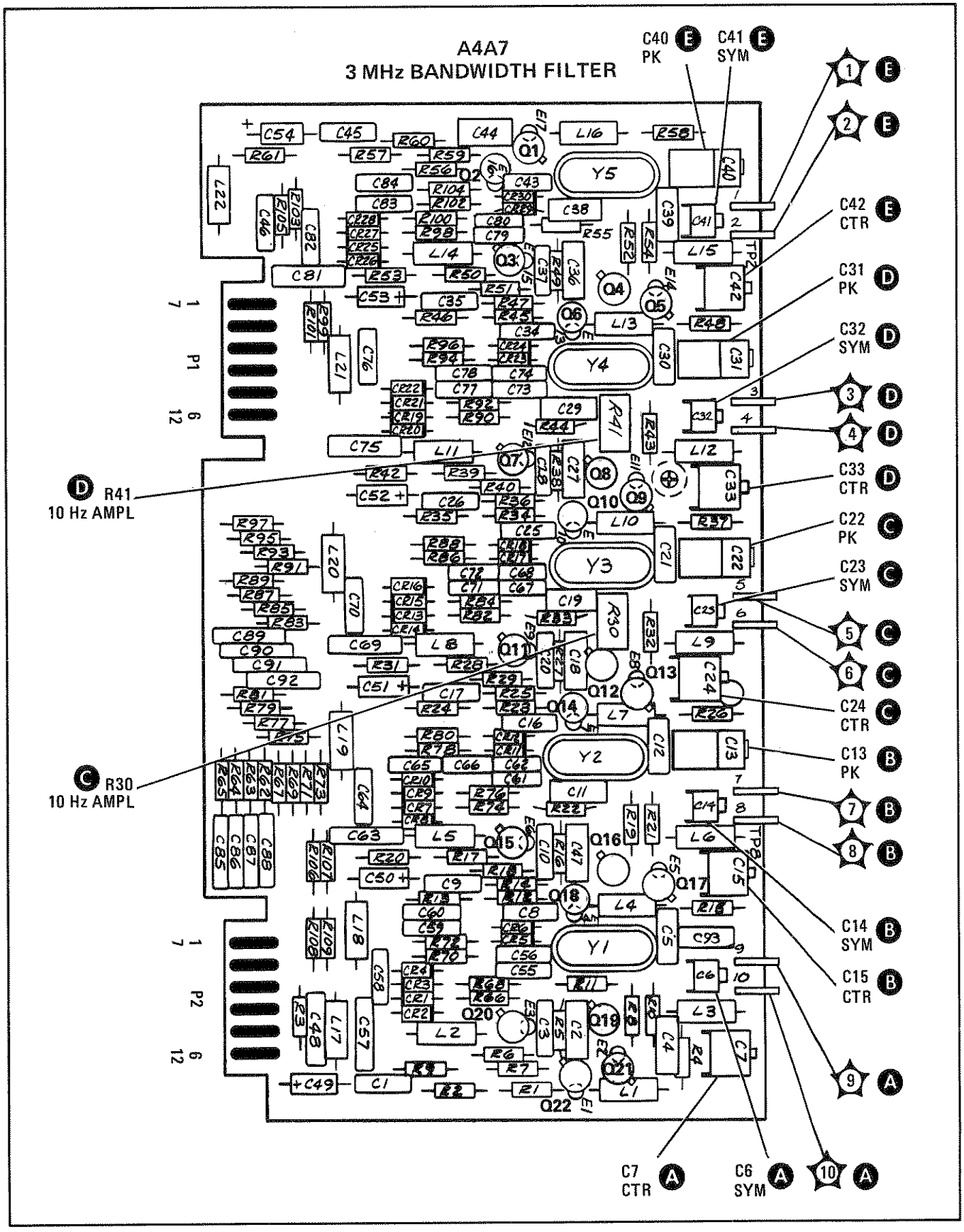

FIGURE 6. A4A7 3 MHz BANDWIDTH FILTER, COMPONENT LOCATIONS

A4A7 3 MHz BANDWIDTH FILTER
85662-60004

P1

PIN	SIGNAL	TO/FROM	FUNCTION BLOCK
1	GND		G
7	GND		G
2	GND		G
8	GND		G
3	3 MHz		E
9	GND		G
4	GND		G
10	GND		G
5	GND		G
11	GND		G
6	GND		G
12	GND		G

P2

PIN	SIGNAL	TO/FROM	FUNCTION BLOCK
1	30 Hz	A4A9, P2-12	F
7	300 Hz	A4A9, P2-14	F
2	10 Hz	A4A9, P2-13	F
8	100 Hz	A4A9, P2-15	F
3	3 MHz	A4A6A2	A
9	GND		G
4	-15V		G
10	-15V		G
5	GND		G
11	GND		G
6	GND		G
12	GND		G

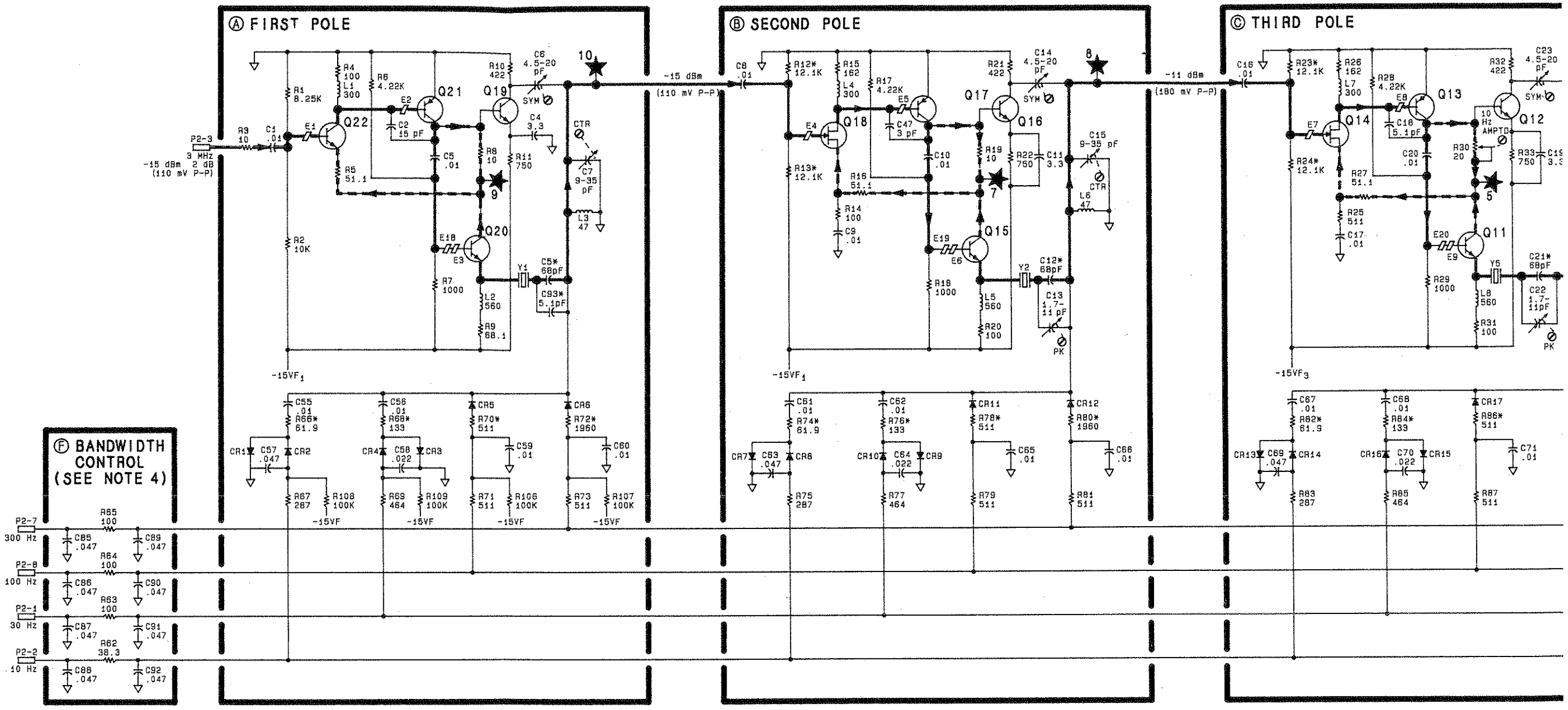

SERIAL PREFIX: 2403A

F-DISPLAY SECTION

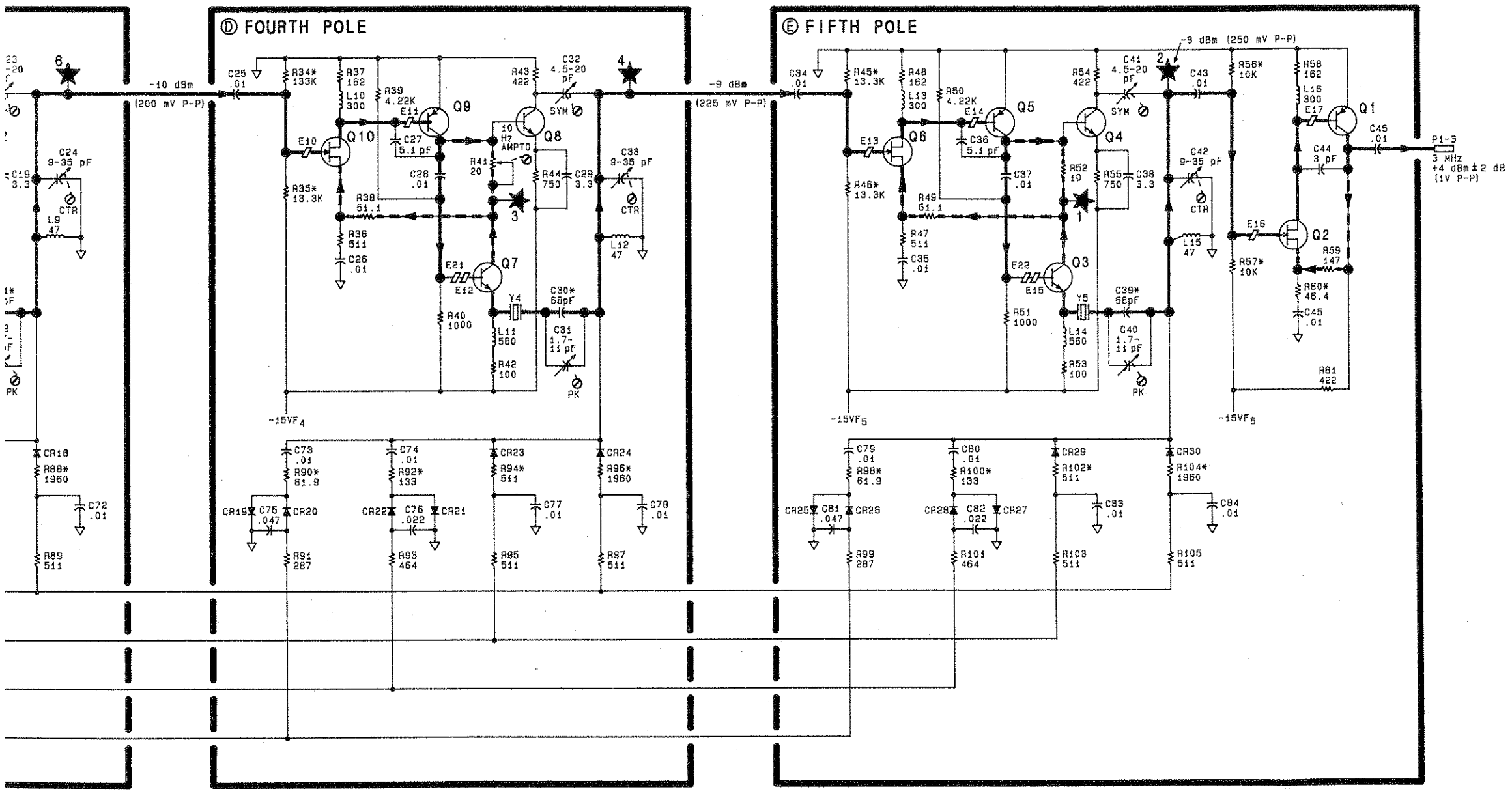

NOTES:

1. REFERENCE DESIGNATORS WITHIN THIS ASSEMBLY ARE ABBREVIATED. FOR COMPLETE REFERENCE DESIGNATION, PREFIX ABBREVIATION WITH ASSEMBLY DESIGNATION.
2. UNLESS OTHERWISE INDICATED: RESISTANCE IS IN OHMS (Ω) CAPACITANCE IS IN MICROFARADS (μF) INDUCTANCE IS IN MICROHENRIES (μH)
3. ASTERISK (*) DENOTES FACTORY SELECTED COMPONENTS; TYPICAL VALUE IS SHOWN. REFER TO SECTION V FOR RANGE OF VALUES.
4. TRUTH TABLE FOR BANDWIDTH CONTROL LINES

RESOLUTION BANDWIDTH	CONTROL LINES			
	300 Hz	100 Hz	30 Hz	10 Hz
1 kHz	<-10V	<-10V	<-10V	<-10V
300 Hz	>+4V	<-10V	<-10V	<-10V
100 Hz	<-10V	>+4V	<-10V	<-10V
30 Hz	<-10V	<-10V	>+4V	<-10V
10 Hz	<-10V	<-10V	>+4V	>+4V

5. INSTRUMENT SETTINGS FOR ALL MEASUREMENTS ON THIS BOARD:

INSTRUMENT PRESET	
CENTER FREQUENCY	CAL. OUT FREQ
FREQUENCY SPAN	0 Hz
ATTENUATION	0 dB
RESOLUTION BANDWIDTH	1 kHz

6. ALL MEASUREMENTS ARE WITH BOARD ON EXTENDERS. POWER LEVELS MAY VARY ± 2 dB. RF VOLTAGES MAY VARY ± 25%.
7. SOURCE VOLTAGE SHOULD BE 0.2 TO 2.0V GREATER THAN GATE VOLTAGE ON Q2, Q6, Q10, Q14 AND Q18. ON THIS BOARD ONLY THE SOURCE IS INDICATED WITH A SQUARE PAD.
8. UNLESS OTHERWISE INDICATED: SIGNALS ENTER AT LEFT SIDE AND EXIT AT RIGHT SIDE OF FUNCTION BLOCKS.

A4A7

FIGURE 7. A4A7 3 MHz BANDWIDTH FILTER, SCHEMATIC DIAGRAM

A4A8 ATTENUATOR-BANDWIDTH FILTER, CIRCUIT DESCRIPTION

A4A8 Attenuator-Bandwidth Filter and A4A4 Bandwidth Filter operate at 21.4 MHz and are variable in bandwidth from 3 kHz to 3 MHz. The narrower bandwidths (3 kHz through 30 kHz) are obtained from five synchronously tuned crystal filters; the wider bandwidths (100 kHz through 3 MHz), from four synchronously tuned LC tank circuits (the bandwidths 10 Hz through 1 kHz are obtained from A4A7 3 MHz Filter). The Bandwidth Filter assemblies are on similar printed-circuit boards. A4A8 has two LC filters and two crystal filters, and A4A4 has two LC filters and three crystal filters (A4A6A1 Up Converter has a single 21.4 MHz crystal that is used only for bandwidths ≤1 kHz). These six crystals comprise a matched set and must be replaced as such. The replacement assemblies are shipped without crystals, so the crystals from the replaced boards must be used again.

10 – 20 dB Attenuator, 10 dB Amplifier (A)

The 10 dB Amplifier is a common emitter amplifier with a gain of ≈10 dB.

$$G = \frac{R63}{R3||R62} \qquad G_{dB} = 20 \log G$$

$$= \frac{287}{90.91} \qquad = 20 \log 3.16$$

$$= 3.16 \qquad \approx 10$$

For the lower gain settings of 0 dB and −10 dB (activated by A10dB and A20dB, respectively), additional collector resistance is switched in by CR3 or CR2, thereby lowering the gain.

Input Buffer Amplifier (C)

The unity gain Input Buffer Amplifier functions as a noninverting op amp (see Figure 1).

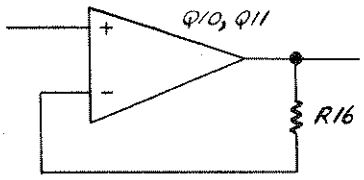

FIGURE 1. A4A8 INPUT BUFFER AMPLIFIER, EQUIVALENT CIRCUIT

In the crystal mode (3 kHz, 10 kHz, and 30 kHz bandwidths), the amplifier includes Q2. The biasing of the amplifier is independent of its ac (21.4 MHz) operation but is very critical for its proper functioning. If a malfunction occurs, the dc bias should be checked first.

The current through Q10 is determined by the difference between two current sources, one involving Q2 and the other involving Q11 (see Figure 2). The most convenient way to find the current from each source is to measure the voltage across each emitter resistor (a 1kΩ resistor should be used in series with the voltmeter probe tip to prevent the circuit from oscillating and giving an erroneous reading). For Q2, the current through R60 must be included. If results are inconsistent, the emitter resistor should be checked also. Check to see that the BW5 line is at approximately −0.5V for bandwidths ≤30 kHz.

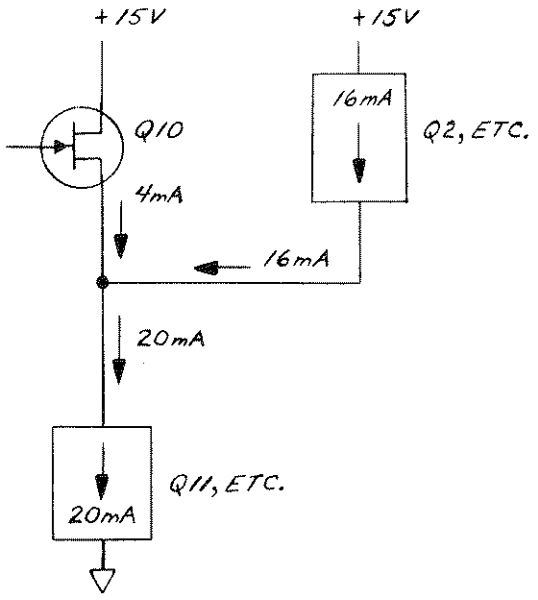

FIGURE 2. A4A8 INPUT BUFFER AMPLIFIER, CURRENT SINKS

In the LC mode (the four wider bandwidths), the BW5 line goes to approximately +14.8V and turns off the current source Q2. The current supplied by Q2 in the crystal mode is now supplied through CR5 and R15 from the BW5 line. In the LC mode, the current through Q10 can be found by subtracting the current through R5 from the current through R12. C76, L34, and C77 form a feedback tank circuit to suppress oscillations.

Buffer Amplifier (F)

The Buffer Amplifier is similar to the Input Buffer Amplifier. The input is selected by the BW5 line from CR9 in the LC mode or from CR8 in the crystal mode.

In the crystal mode, the current through Q4 is determined by the difference between the current sourced by Q6 and that sunk by Q5 (about 4 mA). A significant deviation from this current should be reflected by the gate-to-source voltage of Q4. The source should be at least 0.4V more positive than the gate, but not more than 2.0V more positive. If the difference is less than 0.4V, the FET current is too high; if the difference is greater than 2.0V, the FET current may be too low. In the either case the FET could also be defective. To determine precisely the current through Q4, the difference between the current through R47 and that through R61 should be subtracted from the current through R41. If the results are inconsistent, check the above-mentioned resistors.

In the LC mode of operation, current is supplied through R44 and CR11 from the BW5 line instead of through Q6. The difference between the current through R44 and that through R41 yields the FET current. C79, L35, and C80 form a feedback tank circuit to suppress oscillations.

Output Buffer Amplifier (I)

The Output Buffer Amplifier is a complementary pair of transistors in which Q8 acts as a source follower boosted by Q9. The current through FET Q8 is set by R58:

$$I_{FET} = \frac{V_{be}(Q9)}{196\Omega} \approx \frac{0.7V}{196\Omega} \approx 3.5mA$$

The total current through Q8 and Q9 is set by R59. The input is selected by the BW5 line from either CR15 in the LC mode or CR14 in the crystal mode.

Crystal Filtering Circuits (E) (H)

The bandwidths 3 kHz, 10 Hz, and 30 kHz are obtained by crystal filtering in the First Crystal Pole and Second Crystal Pole circuits. The crystals are used in series resonant mode and can be modeled as a series resonant circuit with a parallel capacitance (see Figure 3).

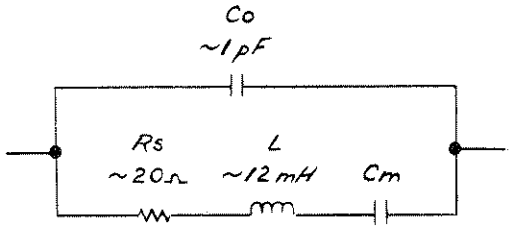

FIGURE 3. QUARTZ CRYSTAL, SIMPLIFIED SCHEMATIC

The parallel capacitance (C_o) and series resistance (R_s) are not desired and are compensated for in the circuit, as shown in the equivalent circuit of a single pole of crystal filtering (see Figure 4).

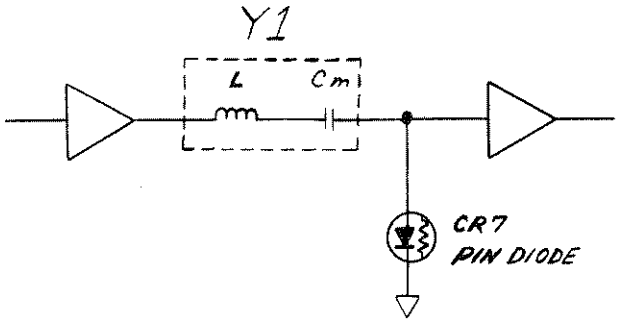

FIGURE 4. CRYSTAL FILTERING POLE, EQUIVALENT CIRCUIT

Since the two crystal filtering circuits are almost identical, the following description is for the First Crystal Pole circuit only.

The PIN diode CR7 functions as a variable resistor at 21.4 MHz. As the resistance is lowered by increasing the current in the BW63 line, the bandshape becomes narrower. The bandwidth of one pole widens to approximately 80 kHz when CR7 is turned off completely at the 30 kHz BW setting. For a five-pole filter, the bandwidth of each pole is about 2.6 times the bandwidth of all five poles taken together. The bandwidth of two poles is about 1.5 times the bandwidth of all five poles taken together.

A simplified schematic of a crystal pole, including compensation for R_s and C_o in the crystal and input capacitance of the buffer amplifier, is shown in Figure 5.

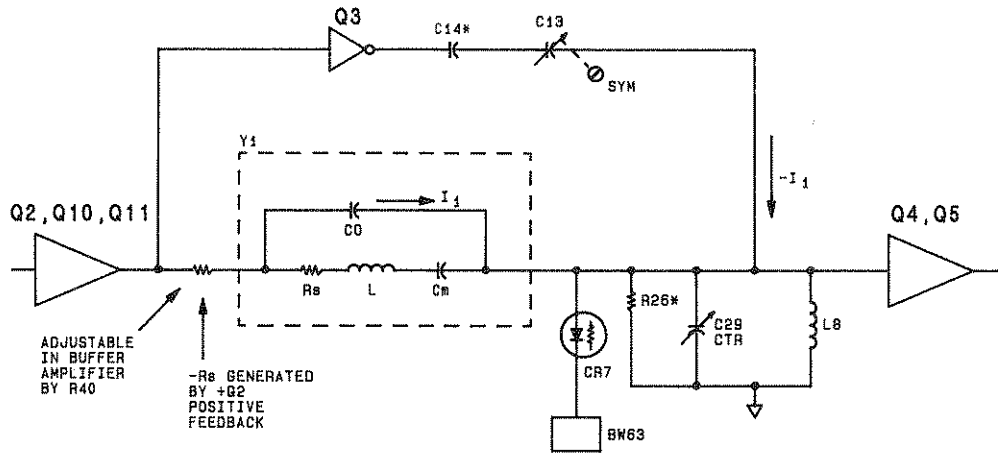

FIGURE 5. CRYSTAL POLE, SIMPLIFIED SCHEMATIC

The SYM adjustment C13 compensates for C_o by producing a current $(-I_1)$ that is equal to the current (I_1) through C_o of the crystal but opposite in phase. These currents cancel, nullifying the effect of C_o. The positive feedback from the collector of Q2 generates a negative output resistance that cancels R_s of the crystal. This is approximated by resistor R16 in the Input Buffer Amplifier and XTL adjustment R40 in the Buffer Amplifier.

The input capacitance of the Buffer Amplifier, printed circuit board capacitance, PIN diode capacitance, and the centering (CTR) capacitor C29 are in parallel resonance with L8. These components have negligible effect on the band shape. As long as C29 has sufficient range to "dip" the band shape, they can be ignored in analyzing the remainder of the circuit.

The PIN diode CR7 controls bandwidths from 3 kHz to 10 kHz. For the 30 kHz bandwidth, CR7 is back biased and R26 sets that bandwidth. If the 30 kHz bandwidth is much too narrow, even with CR7 back biased, the circuit might be loaded by a bad buffer amplifier (Q4, Q5). If the bandwidth is only slightly narrow, it may be widened by selecting a new value for R26*. If the narrowest bandwidth (3 kHz) has too little gain, and it cannot be increased enough by XTL adjustment R40, then the crystals may have too high a series resistance (defective crystal), the output resistance may not be negative enough (defective Buffer Amplifier or Q3), or the crystals may have drifted too far apart in frequency.

LC Filters (D) (G)

The two LC filtering circuits are used for the wider bandwidths (100 kHz through 3 MHz). They are similar in function; the Second LC Pole circuit is described. A schematic of the simplified equivalent circuit is shown in Figure 6.

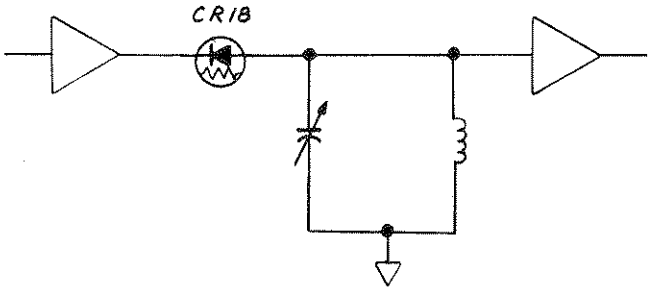

FIGURE 6. LC POLE, EQUIVALENT CIRCUIT

The Q (bandwidth) is set by the resistance of the PIN diode CR18. A more detailed schematic of the Second LC Pole circuit is shown in Figure 7.

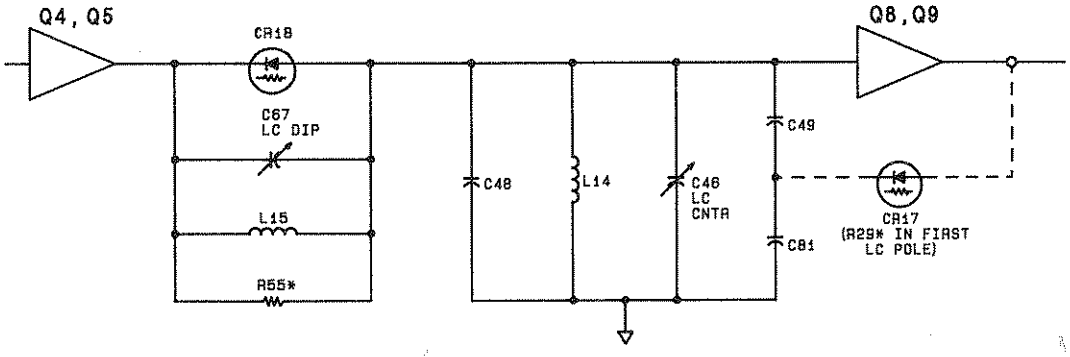

FIGURE 7. SECOND LC POLE CIRCUIT, SIMPLIFIED SCHEMATIC

The LC filter pole comprises an inductor (L14) in parallel with four capacitors: C48, C46 (LC CENTER), and the series combination of C49* and C81*. The parallel circuit is driven through PIN diode CR18, which functions as a variable resistor. The BW7 line sets the current through CR18. Higher resistance results in narrower bandwidth.

C67 and L15 tune out the case capacitance of CR18. R55* sets the 100 kHz bandwidth when CR18 is back biased (i.e., highest resistance). CR17 is controlled by the LC adjustment R35 and compensates for losses in the parallel resonant circuit. In the First LC Pole circuit, fixed resistor R29* replaces CR17.

Low gain in one of the poles in the 100 kHz bandwidth is caused by:

1. Broken or cracked metalized-glass inductor (often intermittent).
2. The pole being centered at some frequency other than 21.4 MHz.
3. Insufficient feedback from the buffer amplifier.
4. Defective buffer amplifier that is loading the circuit.

If the 10 kHz bandwidth amplitude is correct, but that of the 300 kHz bandwidth is too low, either C66 or C67 is not properly adjusted. If the 300 kHz amplitude is too high, the four LC poles are not tuned close enough to the same frequency. In either case, refer to the Performance Tests and Adjustments manual.

A4A8 ATTENUATOR-BANDWIDTH FILTER, TROUBLESHOOTING

As an aid in troubleshooting, critical dc voltages for proper operation are indicated at several nodes on the accompanying schematic.

If the resolution bandwidths from 3 kHz to 3 MHz have low gain and/or incorrect bandwidth, either this board or the A4A4 Bandwidth Filter board may be defective. To determine which board is faulty, disconnect the 97 cable from A4A8J1 and connect it to A4A6J1. If the signal is then 3 to 5 dB lower than expected (i.e., CAL OUTPUT is −13 to −15 dBm) and/or the bandwidth is 30 to 60 percent wider than expected (i.e., 1 MHz [RES BW] is 1.3 to 1.5 MHz), then A4A8 is suspect.

Control line BW5 determines whether the LC filters or the crystal filters are selected. If this line does not switch, A4A9Q3 on the IF control board should be checked. BW63 controls the crystal mode resolution bandwidths from 3 kHz to 30 kHz. The LC resolution bandwidths from 100 kHz to 3 MHz are controlled by BW7. If any of the control line voltages in Note 5 are incorrect, signals from A4A9 IF Control should be checked.

Operation of the A10dB and A20dB circuitry can be determined by the following method. Connect a 355D attenuator between the CAL OUTPUT and the input of the spectrum analyzer. Set this attenuator to 90 dB, press Instrument Preset, and key in the following:

[CENTER FREQUENCY] ..... equal to the CAL OUTPUT frequency
[FREQUENCY SPAN] ..... 0 Hz
[RES BW] ..... 1 kHz
[ATTEN] ..... 0 dB
[VIDEO BW] ..... 10 Hz
[SWEEP TIME] ..... 20 sec
[REFERENCE LEVEL] ..... −10 dBm

Press the [SINGLE] sweep key and then repeatedly press the DATA STEP ⇩ key. Figure 8 shows the display of a properly working instrument. If either of the first two steps is missing, the A10dB or A20dB circuitry is faulty. Note 6 on the LC schematic diagram indicates the correct control line voltages from the A4A9 IF Control board.

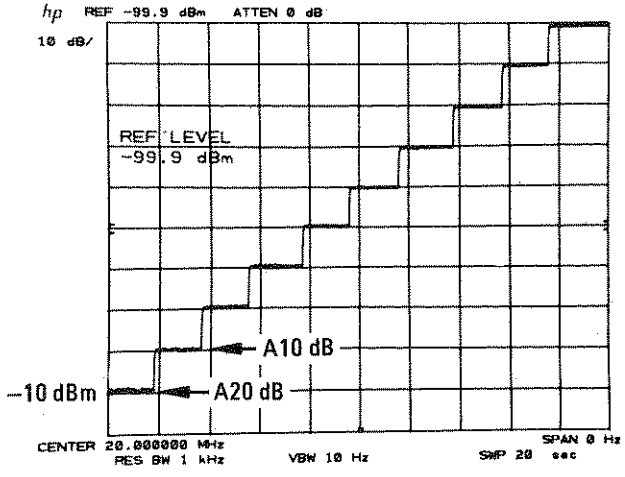

NOTE: Center Frequency readout will be 100.000 000 MHz for an HP 8566B.

FIGURE 8. A10dB/A20dB STEP DISPLAY

TABLE 1. A4A8, REPLACEABLE PARTS (1 OF 4)

Reference Designation	HP Part Number	C D	Qty	Description	Mfr Code	Mfr Part Number
A4A8	85662-60131	8	1	BOARD ASSEMBLY, ATTENUATOR-BANDWITH FLT	28480	85662-60131
A4A8C1	0140-0200	0	1	CAPACITOR-FXD 390PF +-5% 300VDC MICA	72136	DM15F391J0300WV1CR
A4A8C2	0160-2055	9	47	CAPACITOR-FXD .01UF +80-20% 100VDC CER	28480	0160-2055
A4A8C3	0160-2055	9		CAPACITOR-FXD .01UF +80-20% 100VDC CER	28480	0160-2055
A4A8C4	0160-2055	9		CAPACITOR-FXD .01UF +80-20% 100VDC CER	28480	0160-2055
A4A8C5	0160-2055	9		CAPACITOR-FXD .01UF +80-20% 100VDC CER	28480	0160-2055
A4A8C6	0160-2055	9		CAPACITOR-FXD .01UF +80-20% 100VDC CER	28480	0160-2055
A4A8C7	0160-2055	9		CAPACITOR-FXD .01UF +80-20% 100VDC CER	28480	0160-2055
A4A8C8	0160-2055	9		CAPACITOR-FXD .01UF +80-20% 100VDC CER	28480	0160-2055
A4A8C9	0160-2055	9		CAPACITOR-FXD .01UF +80-20% 100VDC CER	28480	0160-2055
A4A8C10				NOT ASSIGNED		
A4A8C11	0160-2055	9		CAPACITOR-FXD .01UF +80-20% 100VDC CER	28480	0160-2055
A4A8C12	0160-2255	1	1	CAPACITOR-FXD 8.2PF +-.25PF 500VDC CER	28480	0160-2255
A4A8C13	0121-0059	7	2	CAPACITOR-V TRMR-CER 2-8PF 350V PC-MTG	52763	304324 2/8PF NPO
A4A8C14*	0160-2249	3	2	CAPACITOR-FXD 4.7PF +-.25PF 500VDC CER	28480	0160-2249
A4A8C15	0160-2055	9		CAPACITOR-FXD .01UF +80-20% 100VDC CER	28480	0160-2055
A4A8C16	0160-2055	9		CAPACITOR-FXD .01UF +80-20% 100VDC CER	28480	0160-2055
A4A8C17	0160-2207	3	2	CAPACITOR-FXD 300PF +-5% 300VDC MICA	28480	0160-2207
A4A8C18	0160-2055	9		CAPACITOR-FXD .01UF +80-20% 100VDC CER	28480	0160-2055
A4A8C19	0160-4297	5	4	CAPACITOR-FXD .022UF +80-20% 100VDC CER	56289	C023F101H223ZS22-CDH
A4A8C20	0160-2055	9		CAPACITOR-FXD .01UF +80-20% 100VDC CER	28480	0160-2055
A4A8C21	0160-3456	6	2	CAPACITOR-FXD 1000PF +-10% 1KVDC CER	28480	0160-3456
A4A8C22	0160-2055	9		CAPACITOR-FXD .01UF +80-20% 100VDC CER	28480	0160-2055
A4A8C23	0160-2055	9		CAPACITOR-FXD .01UF +80-20% 100VDC CER	28480	0160-2055
A4A8C24	0160-2055	9		CAPACITOR-FXD .01UF +80-20% 100VDC CER	28480	0160-2055
A4A8C25	0160-2055	9		CAPACITOR-FXD .01UF +80-20% 100VDC CER	28480	0160-2055
A4A8C26	0160-4297	5		CAPACITOR-FXD .022UF +80-20% 100VDC CER	56289	C023F101H223ZS22-CDH
A4A8C27	0160-2055	9		CAPACITOR-FXD .01UF +80-20% 100VDC CER	28480	0160-2055
A4A8C28	0160-2055	9		CAPACITOR-FXD .01UF +80-20% 100VDC CER	28480	0160-2055
A4A8C29	0121-0446	6	2	CAPACITOR-V TRMR-CER 4.5-20PF 160V	28480	0121-0446
A4A8C30	0160-2055	9		CAPACITOR-FXD .01UF +80-20% 100VDC CER	28480	0160-2055
A4A8C31	0160-2055	9		CAPACITOR-FXD .01UF +80-20% 100VDC CER	28480	0160-2055
A4A8C32	0121-0036	8	2	CAPACITOR-V TRMR-CER 5.5-18PF 350V	52763	304324 5.5/18PF NPO
A4A8C33	0160-2055	9		CAPACITOR-FXD .01UF +80-20% 100VDC CER	28480	0160-2055
A4A8C34	0160-0437	7	2	CAPACITOR-FXD 12PF +-5% 500VDC CER	28480	0160-0437
A4A8C35*	0160-0134	1	2	CAPACITOR-FXD 220PF +-5% 300VDC MICA	28480	0160-0134
A4A8C36	0160-2055	9		CAPACITOR-FXD .01UF +80-20% 100VDC CER	28480	0160-2055
A4A8C37				NOT ASSIGNED		
A4A8C38	0160-2055	9		CAPACITOR-FXD .01UF +80-20% 100VDC CER	28480	0160-2055
A4A8C39	0160-4297	5		CAPACITOR-FXD .022UF +80-20% 100VDC CER	56289	C023F101H223ZS22-CDH
A4A8C40	0160-2055	9		CAPACITOR-FXD .01UF +80-20% 100VDC CER	28480	0160-2055
A4A8C41	0160-2254	0	1	CAPACITOR-FXD 7.5PF +-.25PF 500VDC CER	28480	0160-2254
A4A8C42	0121-0059	7		CAPACITOR-V TRMR-CER 2-8PF 350V PC-MTG	52763	304324 2/8PF NPO
A4A8C43*	0160-2249	3		CAPACITOR-FXD 4.7PF +-.25PF 500VDC CER	28480	0160-2249
A4A8C44	0121-0446	6		CAPACITOR-V TRMR-CER 4.5-20PF 160V	28480	0121-0446
A4A8C45	0160-2055	9		CAPACITOR-FXD .01UF +80-20% 100VDC CER	28480	0160-2055
A4A8C46	0121-0036	8		CAPACITOR-V TRMR-CER 5.5-18PF 350V	52763	304324 5.5/18PF NPO
A4A8C47	0160-2055	9		CAPACITOR-FXD .01UF +80-20% 100VDC CER	28480	0160-2055
A4A8C48	0160-0437	7		CAPACITOR-FXD 12PF +-5% 500VDC CER	28480	0160-0437
A4A8C49*	0160-0134	1		CAPACITOR-FXD 220PF +-5% 300VDC MICA	28480	0160-0134
A4A8C50	0160-3456	6		CAPACITOR-FXD 1000PF +-10% 1KVDC CER	28480	0160-3456
A4A8C51	0160-2055	9		CAPACITOR-FXD .01UF +80-20% 100VDC CER	28480	0160-2055
A4A8C52	0160-2055	9		CAPACITOR-FXD .01UF +80-20% 100VDC CER	28480	0160-2055
A4A8C53	0160-2055	9		CAPACITOR-FXD .01UF +80-20% 100VDC CER	28480	0160-2055
A4A8C54	0160-2055	9		CAPACITOR-FXD .01UF +80-20% 100VDC CER	28480	0160-2055
A4A8C55	0160-2055	9		CAPACITOR-FXD .01UF +80-20% 100VDC CER	28480	0160-2055
A4A8C56	0160-2055	9		CAPACITOR-FXD .01UF +80-20% 100VDC CER	28480	0160-2055
A4A8C57	0160-2055	9		CAPACITOR-FXD .01UF +80-20% 100VDC CER	28480	0160-2055
A4A8C58	0160-2055	9		CAPACITOR-FXD .01UF +80-20% 100VDC CER	28480	0160-2055
A4A8C59	0160-2055	9		CAPACITOR-FXD .01UF +80-20% 100VDC CER	28480	0160-2055
A4A8C60	0160-4297	5		CAPACITOR-FXD .022UF +80-20% 100VDC CER	56289	C023F101H223ZS22-CDH
A4A8C61	0160-2055	9		CAPACITOR-FXD .01UF +80-20% 100VDC CER	28480	0160-2055
A4A8C62	0160-2055	9		CAPACITOR-FXD .01UF +80-20% 100VDC CER	28480	0160-2055
A4A8C63*	0140-0194	1	1	CAPACITOR-FXD 110PF +-5% 300VDC MICA	72136	DM15F111J0300WV1CR
A4A8C64	0160-2055	9		CAPACITOR-FXD .01UF +80-20% 100VDC CER	28480	0160-2055
A4A8C65	0160-2055	9		CAPACITOR-FXD .01UF +80-20% 100VDC CER	28480	0160-2055
A4A8C66	0121-0452	4	2	CAPACITOR-V TRMR-AIR 1.3-5.4PF 175V	74970	187-0103-028
A4A8C67	0121-0452	4		CAPACITOR-V TRMR-AIR 1.3-5.4PF 175V	74970	187-0103-028
A4A8C68	0160-2055	9		CAPACITOR-FXD .01UF +80-20% 100VDC CER	28480	0160-2055
A4A8C69	0160-2055	9		CAPACITOR-FXD .01UF +80-20% 100VDC CER	28480	0160-2055
A4A8C70	0160-2207	3		CAPACITOR-FXD 300PF +-5% 300VDC MICA	28480	0160-2207

*Indicates factory selected value

TABLE 1. A4A8, REPLACEABLE PARTS (2 OF 4)

Reference Designation	HP Part Number	C D	Qty	Description	Mfr Code	Mfr Part Number
A4A8C71	0160-2055	9		CAPACITOR-FXD .01UF +80-20% 100VDC CER	28480	0160-2055
A4A8C72	0160-4084	9	2	CAPACITOR-FXD .1UF +-20% 50VDC CER	28480	0160-4084
A4A8C73	0160-4084	8		CAPACITOR-FXD .1UF +-20% 50VDC CER	28480	0160-4084
A4A8C74	0160-2055	9		CAPACITOR-FXD .01UF +80-20% 100VDC CER	28480	0160-2055
A4A8C75	0160-2055	9		CAPACITOR-FXD .01UF +80-20% 100VDC CER	28480	0160-2055
A4A8C76	0160-2055	9		CAPACITOR-FXD .01UF +80-20% 100VDC CER	28480	0160-2055
A4A8C77	0160-2258	4	2	CAPACITOR-FXD 11PF +-5% 500VDC CER 0+-30	28480	0160-2258
A4A8C78*	0140-0198	5	2	CAPACITOR-FXD 200PF +-5% 300VDC MICA	72136	DM15F201J0300WV1CR
A4A8C79	0160-2055	9		CAPACITOR-FXD .01UF +80-20% 100VDC CER	28480	0160-2055
A4A8C80	0160-2258	4		CAPACITOR-FXD 11PF +-5% 500VDC CER 0+-30	28480	0160-2258
A4A8C81*	0140-0198	5		CAPACITOR-FXD 200PF +-5% 300VDC MICA	72136	DM15F201J0300WV1CR
A4A8CR1				NOT ASSIGNED		
A4A8CR2	1901-1070	9	7	DIODE-PIN 110V	28480	1901-1070
A4A8CR3	1901-1070	9		DIODE-PIN 110V	28480	1901-1070
A4A8CR4	1901-0047	8	6	DIODE-SWITCHING 20V 75MA 10NS	28480	1901-0047
A4A8CR5	1901-0047	8		DIODE-SWITCHING 20V 75MA 10NS	28480	1901-0047
A4A8CR6	1901-1070	9		DIODE-PIN 110V	28480	1901-1070
A4A8CR7	1901-1070	9		DIODE-PIN 110V	28480	1901-1070
A4A8CR8	1901-0535	9	5	DIODE-SM SIG SCHOTTKY	28480	1901-0535
A4A8CR9	1901-0047	8		DIODE-SWITCHING 20V 75MA 10NS	28480	1901-0047
A4A8CR10	1901-0535	9		DIODE-SM SIG SCHOTTKY	28480	1901-0535
A4A8CR11	1901-0047	8		DIODE-SWITCHING 20V 75MA 10NS	28480	1901-0047
A4A8CR12	1901-0047	8		DIODE-SWITCHING 20V 75MA 10NS	28480	1901-0047
A4A8CR13	1901-1070	9		DIODE-PIN 110V	28480	1901-1070
A4A8CR14	1901-0535	9		DIODE-SM SIG SCHOTTKY	28480	1901-0535
A4A8CR15	1901-0047	8		DIODE-SWITCHING 20V 75MA 10NS	28480	1901-0047
A4A8CR16	1901-0535	9		DIODE-SM SIG SCHOTTKY	28480	1901-0535
A4A8CR17	1901-1070	9		DIODE-PIN 110V	28480	1901-1070
A4A8CR18	1901-1070	9		DIODE-PIN 110V	28480	1901-1070
A4A8CR19	1901-0535	9		DIODE-SM SIG SCHOTTKY	28480	1901-0535
A4A8E1	9170-0029	3	12	CORE-SHIELDING BEAD	28480	9170-0029
A4A8E2				NOT ASSIGNED		
A4A8E3	9170-0029	3		CORE-SHIELDING BEAD	28480	9170-0029
A4A8E4	9170-0029	3		CORE-SHIELDING BEAD	28480	9170-0029
A4A8E5	9170-0029	3		CORE-SHIELDING BEAD	28480	9170-0029
A4A8E6	9170-0029	3		CORE-SHIELDING BEAD	28480	9170-0029
A4A8E7				NOT ASSIGNED		
A4A8E8	9170-0029	3		CORE-SHIELDING BEAD	28480	9170-0029
A4A8E9	9170-0029	3		CORE-SHIELDING BEAD	28480	9170-0029
A4A8E10	9170-0029	3		CORE-SHIELDING BEAD	28480	9170-0029
A4A8E11	9170-0029	3		CORE-SHIELDING BEAD	28480	9170-0029
A4A8E12	9170-0029	3		CORE-SHIELDING BEAD	28480	9170-0029
A4A8E13	9170-0029	3		CORE-SHIELDING BEAD	28480	9170-0029
A4A8E14	9170-0029	3		CORE-SHIELDING BEAD	28480	9170-0029
A4A8J1	1250-0690	6	1	CONNECTOR-RF SMB M SGL-HOLE-FR 50-OHM	28480	1250-0690
A4A8L1	9100-3314	8	1	INDUCTOR RF-CH-MLD 150NH 5% .166DX.385LG	28480	9100-3314
A4A8L2	9140-0179	1	2	INDUCTOR RF-CH-MLD 22UH 10% .166DX.385LG	28480	9140-0179
A4A8L3	9140-0453	4	2	INDUCTOR RF-CH-MLD 6.8UH 5% .166DX.385LG	28480	9140-0453
A4A8L4	9100-1618	1	4	INDUCTOR RF-CH-MLD 5.6UH 10%	28480	9100-1618
A4A8L5	9140-0114	4	3	INDUCTOR RF-CH-MLD 10UH 10% .166DX.385LG	28480	9140-0114
A4A8L6	9140-0114	4		INDUCTOR RF-CH-MLD 10UH 10% .166DX.385LG	28480	9140-0114
A4A8L7	9100-2813	0	2	INDUCTOR 400NH 10% .312DX1.016LG Q=150	28480	9100-2813
A4A8L8	9140-0111	1	2	INDUCTOR RF-CH-MLD 3.3UH 10%	28480	9140-0111
A4A8L9	9100-1620	5	3	INDUCTOR RF-CH-MLD 15UH 10% .166DX.385LG	28480	9100-1620
A4A8L10	9140-0453	4		INDUCTOR RF-CH-MLD 6.8UH 5% .166DX.385LG	28480	9140-0453
A4A8L11	9100-1618	1		INDUCTOR RF-CH-MLD 5.6UH 10%	28480	9100-1618
A4A8L12	9100-1618	1		INDUCTOR RF-CH-MLD 5.6UH 10%	28480	9100-1618
A4A8L13	9140-0114	4		INDUCTOR RF-CH-MLD 10UH 10% .166DX.385LG	28480	9140-0114
A4A8L14	9100-2813	0		INDUCTOR 400NH 10% .312DX1.016LG Q=150	28480	9100-2813
A4A8L15	9100-1620	5		INDUCTOR RF-CH-MLD 15UH 10% .166DX.385LG	28480	9100-1620
A4A8L16	9100-1620	5		INDUCTOR RF-CH-MLD 15UH 10% .166DX.385LG	28480	9100-1620
A4A8L17	9140-0111	1		INDUCTOR RF-CH-MLD 3.3UH 10%	28480	9140-0111
A4A8L18				NOT ASSIGNED		
A4A8L19	9100-1618	1		INDUCTOR RF-CH-MLD 5.6UH 10%	28480	9100-1618
A4A8L20	9140-0179	1		INDUCTOR RF-CH-MLD 22UH 10% .166DX.385LG	28480	9140-0179
A4A8L21-A4A8L32				NOT ASSIGNED		
A4A8L33	9140-0158	6	1	INDUCTOR RF-CH-MLD 1UH 10% .105DX.26LG	28480	9140-0158
A4A8L34	9140-0112	2	2	INDUCTOR RF-CH-MLD 4.7UH 10%	28480	9140-0112
A4A8L35	9140-0112	2		INDUCTOR RF-CH-MLD 4.7UH 10%	28480	9140-0112
A4A8Q1	1854-0345	8	1	TRANSISTOR NPN 2N5179 SI TO-72 PD=200MW	04713	2N5179
A4A8Q2	1853-0007	7	5	TRANSISTOR PNP 2N3251 SI TO-18 PD=360MW	04713	2N3251
A4A8Q3	1853-0007	7		TRANSISTOR PNP 2N3251 SI TO-18 PD=360MW	04713	2N3251
A4A8Q4	1855-0267	5	3	TRANSISTOR J-FET N-CHAN D-MODE TO-92 SI	28480	1855-0267
A4A8Q5	1854-0404	0	2	TRANSISTOR NPN SI TO-18 PD=360MW	28480	1854-0404

*Indicates factory selected value

TABLE 1. A4A8, REPLACEABLE PARTS (3 OF 4)

Reference Designation	HP Part Number	C D	Qty	Description	Mfr Code	Mfr Part Number
A4A8Q6	1853-0007	7		TRANSISTOR PNP 2N3251 SI TO-18 PD=360MW	04713	2N3251
A4A8Q7	1853-0007	7		TRANSISTOR PNP 2N3251 SI TO-18 PD=360MW	04713	2N3251
A4A8Q8	1855-0267	5		TRANSISTOR J-FET N-CHAN D-MODE TO-92 SI	28480	1855-0267
A4A8Q9	1853-0007	7		TRANSISTOR PNP 2N3251 SI TO-18 PD=360MW	04713	2N3251
A4A8Q10	1855-0267	5		TRANSISTOR J-FET N-CHAN D-MODE TO-92 SI	28480	1855-0267
A4A8Q11	1854-0404	0		TRANSISTOR NPN SI TO-18 PD=360MW	28480	1854-0404
A4A8R1	0757-0395	1	1	RESISTOR 56.2 1% .125W F TC=0+-100	24546	C4-1/8-T0-56R2-F
A4A8R2	0698-8083	8		RESISTOR 1.96K 1% .125W F TC=0+-100	24546	C4-1/8-T0-1961-F
A4A8R3	0757-0401	0	5	RESISTOR 100 1% .125W F TC=0+-100	24546	C4-1/8-T0-101-F
A4A8R4	0757-0294	9	1	RESISTOR 17.8 1% .125W F TC=0+-100	19701	MF4C1/8-T0-17R8-F
A4A8R5	0757-0401	0		RESISTOR 100 1% .125W F TC=0+-100	24546	C4-1/8-T0-101-F
A4A8R6	2100-3053	5	1	RESISTOR-TRMR 20 20% C SIDE-ADJ 17-TRN	02111	43P200
A4A8R7	2100-3052	4	2	RESISTOR-TRMR 50 10% C SIDE-ADJ 17-TRN	02111	43P500
A4A8R8	0757-0416	7	1	RESISTOR 511 1% .125W F TC=0+-100	24546	C4-1/8-T0-511R-F
A4A8R9	0698-3260	9		RESISTOR 464K 1% .125W F TC=0+-100	28480	0698-3260
A4A8R10	0698-3260	9		RESISTOR 464K 1% .125W F TC=0+-100	28480	0698-3260
A4A8R11	0757-0280	3	8	RESISTOR 1K 1% .125W F TC=0+-100	24546	C4-1/8-T0-1001-F
A4A8R12	0757-0401	0		RESISTOR 100 1% .125W F TC=0+-100	24546	C4-1/8-T0-101-F
A4A8R13	0757-0280	3		RESISTOR 1K 1% .125W F TC=0+-100	24546	C4-1/8-T0-1001-F
A4A8R14	0698-3155	1	2	RESISTOR 4.64K 1% .125W F TC=0+-100	24546	C4-1/8-T0-4641-F
A4A8R15	0698-0082	7	3	RESISTOR 464 1% .125W F TC=0+-100	24546	C4-1/8-T0-4640-F
A4A8R16	0698-3429	2	1	RESISTOR 19.6 1% .125W F TC=0+-100	03888	PME55-1/8-T0-19R6-F
A4A8R17	0757-0443	0	2	RESISTOR 11K 1% .125W F TC=0+-100	24546	C4-1/8-T0-1102-F
A4A8R18	0757-0438	3	4	RESISTOR 5.11K 1% .125W F TC=0+-100	24546	C4-1/8-T0-5111-F
A4A8R19*	0698-3260	9	3	RESISTOR 464K 1% .125W F TC=0+-100	28480	0698-3260
A4A8R20	0698-3441	8	2	RESISTOR 215 1% .125W F TC=0+-100	24546	C4-1/8-T0-215R-F
A4A8R21	0698-3444	1	2	RESISTOR 316 1% .125W F TC=0+-100	24546	C4-1/8-T0-316R-F
A4A8R22	0698-3442	9	2	RESISTOR 237 1% .125W F TC=0+-100	24546	C4-1/8-T0-237R-F
A4A8R23	0757-0279	0	2	RESISTOR 3.16K 1% .125W F TC=0+-100	24546	C4-1/8-T0-3161-F
A4A8R24*	0757-0346	2	1	RESISTOR 10 1% .125W F TC=0+-100	24546	C4-1/8-T0-10R0-F
A4A8R25	0757-0280	3		RESISTOR 1K 1% .125W F TC=0+-100	24546	C4-1/8-T0-1001-F
A4A8R26*	0757-0290	5	6	RESISTOR 6.19K 1% .125W F TC=0+-100	19701	MF4C1/8-T0-6191-F
A4A8R27	0757-0290	5		RESISTOR 6.19K 1% .125W F TC=0+-100	19701	MF4C1/8-T0-6191-F
A4A8R28	0757-0290	5		RESISTOR 6.19K 1% .125W F TC=0+-100	19701	MF4C1/8-T0-6191-F
A4A8R29*	0698-8083	8	2	RESISTOR 1.96K 1% .125W F TC=0+-100	24546	C4-1/8-T0-1961-F
A4A8R30*	0698-3152	8	1	RESISTOR 3.48K 1% .125W F TC=0+-100	24546	C4-1/8-T0-3481-F
A4A8R31	0698-3156	2	4	RESISTOR 14.7K 1% .125W F TC=0+-100	24546	C4-1/8-T0-1472-F
A4A8R32	0698-3156	2		RESISTOR 14.7K 1% .125W F TC=0+-100	24546	C4-1/8-T0-1472-F
A4A8R33	0757-0280	3		RESISTOR 1K 1% .125W F TC=0+-100	24546	C4-1/8-T0-1001-F
A4A8R34				NOT ASSIGNED		
A4A8R35	2100-3163	8	1	RESISTOR-TRMR 1M 20% C SIDE-ADJ 17-TRN	02111	43P105
A4A8R36				NOT ASSIGNED		
A4A8R37				NOT ASSIGNED		
A4A8R38	0757-1094	9	1	RESISTOR 1.47K 1% .125W F TC=0+-100	24546	C4-1/8-T0-1471-F
A4A8R39	0757-0442	9	3	RESISTOR 10K 1% .125W F TC=0+-100	24546	C4-1/8-T0-1002-F
A4A8R40	2100-3052	4		RESISTOR-TRMR 50 10% C SIDE-ADJ 17-TRN	02111	43P500
A4A8R41	0757-0401	0		RESISTOR 100 1% .125W F TC=0+-100	24546	C4-1/8-T0-101-F
A4A8R42	0757-0280	3		RESISTOR 1K 1% .125W F TC=0+-100	24546	C4-1/8-T0-1001-F
A4A8R43	0698-3155	1		RESISTOR 4.64K 1% .125W F TC=0+-100	24546	C4-1/8-T0-4641-F
A4A8R44	0698-0082	7		RESISTOR 464 1% .125W F TC=0+-100	24546	C4-1/8-T0-4640-F
A4A8R45	0757-0443	0		RESISTOR 11K 1% .125W F TC=0+-100	24546	C4-1/8-T0-1102-F
A4A8R46	0757-0438	3		RESISTOR 5.11K 1% .125W F TC=0+-100	24546	C4-1/8-T0-5111-F
A4A8R47	0698-3441	8		RESISTOR 215 1% .125W F TC=0+-100	24546	C4-1/8-T0-215R-F
A4A8R48	0698-3444	1		RESISTOR 316 1% .125W F TC=0+-100	24546	C4-1/8-T0-316R-F
A4A8R49	0698-3442	9		RESISTOR 237 1% .125W F TC=0+-100	24546	C4-1/8-T0-237R-F
A4A8R50	0757-0280	3		RESISTOR 1K 1% .125W F TC=0+-100	24546	C4-1/8-T0-1001-F
A4A8R51	0757-0279	0		RESISTOR 3.16K 1% .125W F TC=0+-100	24546	C4-1/8-T0-3161-F
A4A8R52*	0757-0290	5		RESISTOR 6.19K 1% .125W F TC=0+-100	19701	MF4C1/8-T0-6191-F
A4A8R53	0757-0290	5		RESISTOR 6.19K 1% .125W F TC=0+-100	19701	MF4C1/8-T0-6191-F
A4A8R54	0757-0290	5		RESISTOR 6.19K 1% .125W F TC=0+-100	19701	MF4C1/8-T0-6191-F
A4A8R55*	0757-0440	7	1	RESISTOR 7.5K 1% .125W F TC=0+-100	24546	C4-1/8-T0-7501-F
A4A8R56	0698-3156	2		RESISTOR 14.7K 1% .125W F TC=0+-100	24546	C4-1/8-T0-1472-F
A4A8R57	0698-3156	2		RESISTOR 14.7K 1% .125W F TC=0+-100	24546	C4-1/8-T0-1472-F
A4A8R58	0698-3440	7	1	RESISTOR 196 1% .125W F TC=0+-100	24546	C4-1/8-T0-196R-F
A4A8R59	0698-0082	7		RESISTOR 464 1% .125W F TC=0+-100	24546	C4-1/8-T0-4640-F
A4A8R60	0698-3154	0	2	RESISTOR 4.22K 1% .125W F TC=0+-100	24546	C4-1/8-T0-4221-F
A4A8R61	0698-3154	0		RESISTOR 4.22K 1% .125W F TC=0+-100	24546	C4-1/8-T0-4221-F
A4A8R62	0757-0280	3		RESISTOR 1K 1% .125W F TC=0+-100	24546	C4-1/8-T0-1001-F
A4A8R63	0698-3443	0	1	RESISTOR 287 1% .125W F TC=0+-100	24546	C4-1/8-T0-287R-F
A4A8R64	0757-0401	0		RESISTOR 100 1% .125W F TC=0+-100	24546	C4-1/8-T0-101-F
A4A8R65				NOT ASSIGNED		
A4A8R66	0757-0438	3		RESISTOR 5.11K 1% .125W F TC=0+-100	24546	C4-1/8-T0-5111-F
A4A8R67	0757-0438	3		RESISTOR 5.11K 1% .125W F TC=0+-100	24546	C4-1/8-T0-5111-F
A4A8R68	0757-0280	3		RESISTOR 1K 1% .125W F TC=0+-100	24546	C4-1/8-T0-1001-F
A4A8R69	0757-0442	9		RESISTOR 10K 1% .125W F TC=0+-100	24546	C4-1/8-T0-1002-F
A4A8R70	0757-0442	9		RESISTOR 10K 1% .125W F TC=0+-100	24546	C4-1/8-T0-1002-F

*Indicates factory selected value

TABLE 1. A4A8, REPLACEABLE PARTS (4 OF 4)

Reference Designation	HP Part Number	C D	Qty	Description	Mfr Code	Mfr Part Number
A4A8R71	0757-0465	6	1	RESISTOR 100K 1% .125W F TC=0+-100	24546	C4-1/8-T0-1003-F
A4A8R72	0757-0180	2	2	RESISTOR 31.6 1% .125W F TC=0+-100	28480	0757-0180
A4A8R73	0757-0180	2		RESISTOR 31.6 1% .125W F TC=0+-100	28480	0757-0180
A4A8TP1	0360-1788	7	4	CONNECTOR-SGL CONT PIN .045-IN-BSC-SZ SQ	28480	0360-1788
A4A8TP2	0360-1788	7		CONNECTOR-SGL CONT PIN .045-IN-BSC-SZ SQ	28480	0360-1788
A4A8TP3	1251-0600	8	5	CONNECTOR-SGL CONT PIN 1.14-MM-BSC-SZ SQ	28480	1251-0600
A4A8TP4	0360-1788	7		CONNECTOR-SGL CONT PIN .045-IN-BSC-SZ SQ	28480	0360-1788
A4A8TP5	0360-1788	7		CONNECTOR-SGL CONT PIN .045-IN-BSC-SZ SQ	28480	0360-1788
A4A8TP6	1251-0600	8		CONNECTOR-SGL CONT PIN 1.14-MM-BSC-SZ SQ	28480	1251-0600
A4A8TP7	1251-0600	8		CONNECTOR-SGL CONT PIN 1.14-MM-BSC-SZ SQ	28480	1251-0600
A4A8TP8	1251-0600	8		CONNECTOR-SGL CONT PIN 1.14-MM-BSC-SZ SQ	28480	1251-0600
A4A8TP9	1251-0600	8		CONNECTOR-SGL CONT PIN 1.14-MM-BSC-SZ SQ	28480	1251-0600
A4A8VR1	1902-3139	7	1	DIODE-ZNR 8.25V 5% DO-35 PD=.4W	28480	1902-3139
A4A8Y1	0410-1029	6	2	CRYSTAL-QUARTZ MATCHED SET OF 6	28480	0410-1029
A4A8Y2	0410-1029	6		CRYSTAL-QUARTZ MATCHED SET OF 6 SET OF SIX INCLUDES A4A4Y1-3, A4A6A1Y1 AND A4A8Y1-2	28480	0410-1029
				MISCELLANEOUS PARTS		
	6960-0069	3	1	PLUG-HOLE CNCL-HD FOR .125-D-HOLE NYL	28480	6960-0069
	85662-20038	0	1	CVR ATTEN BW FLT	28480	85662-20038
	86701-40001	9	1	EXTRACTOR PC	28480	86701-40001

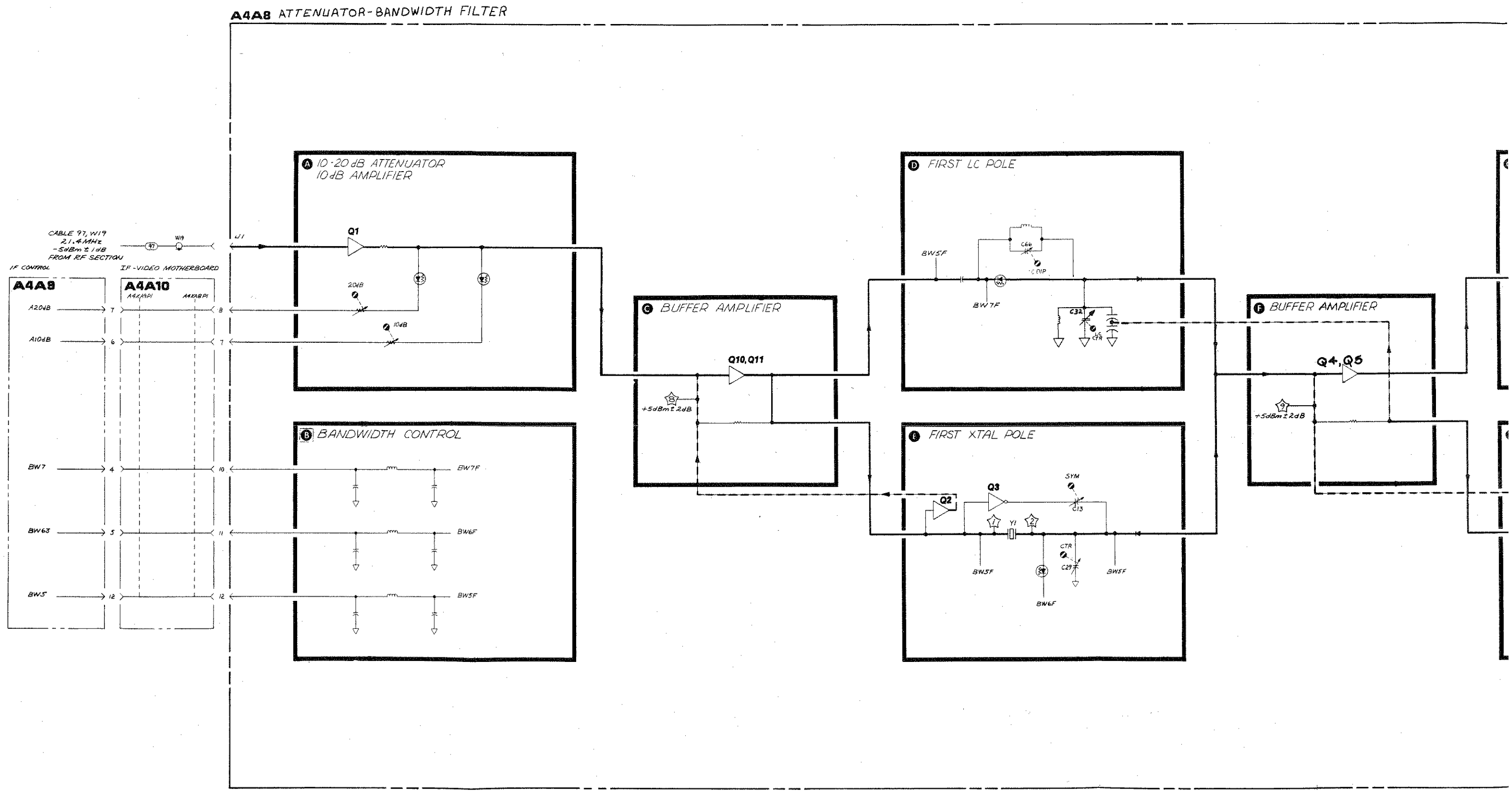
A4A8 ATTENUATOR-BANDWIDTH FILTER
CABLE 97, W19
21.4 MHz
-5dBm ± 1dB
FROM RF SECTION
IF CONTROL
IF-VIDEO MOTHERBOARD
A4A8
A4A10
A20dB
A10dB
BW7
BW63
BW5
A 10-20 dB ATTENUATOR
10 dB AMPLIFIER
Q1
20dB
10dB
B BANDWIDTH CONTROL
BW7F
BW6F
BW5F
C BUFFER AMPLIFIER
Q10, Q11
+5dBm ± 2dB
D FIRST LC POLE
BW5F
BW7F
C66
C32
E FIRST XTAL POLE
Q2
Q3
SYM
C13
Y1
CTR
C29
BW5F
BW6F
BW5F
F BUFFER AMPLIFIER
Q4, Q5
+5dBm ± 2dB

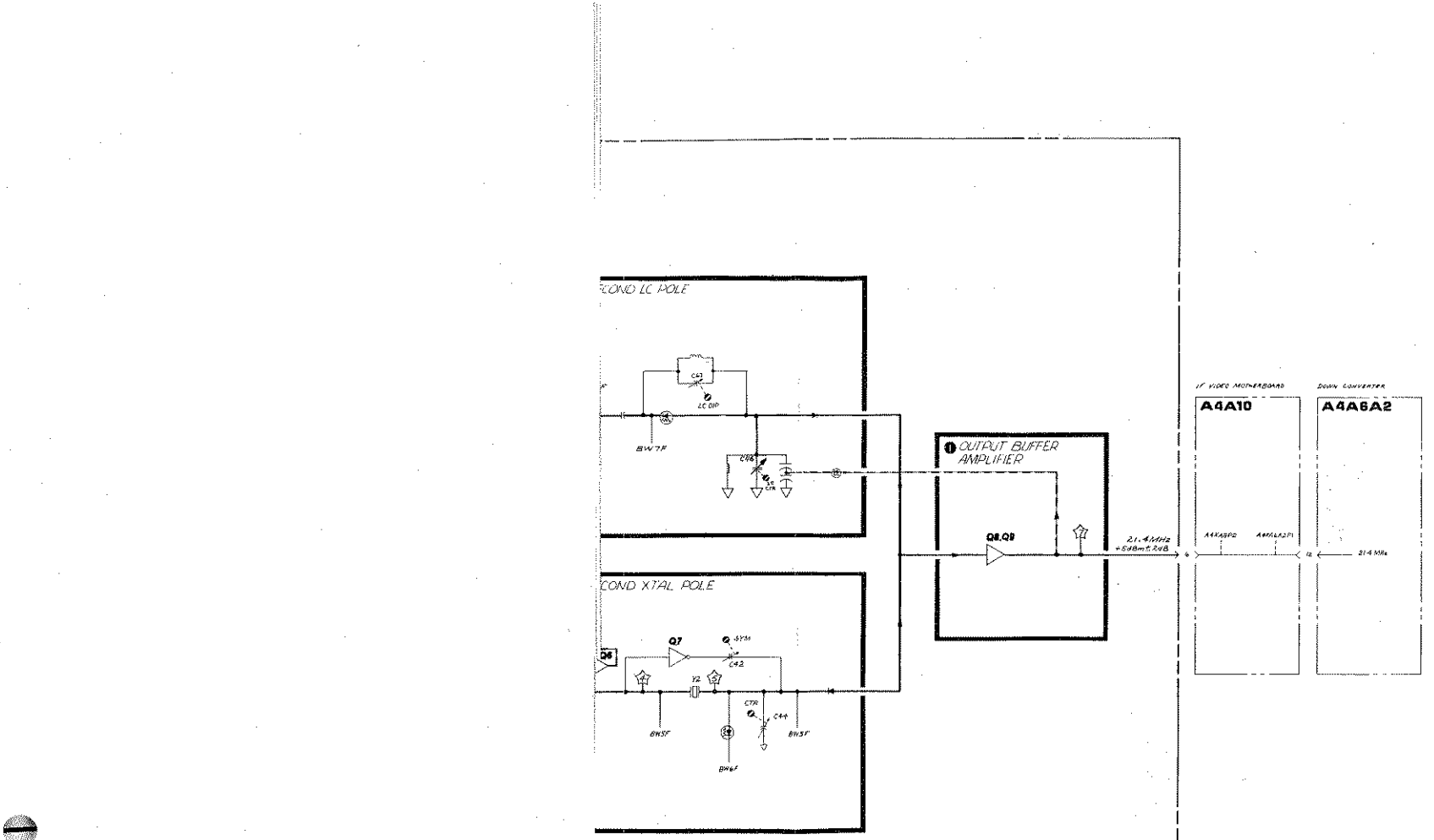

A4A8

FIGURE 9. A4A8 ATTENUATOR-BANDWIDTH FILTER, BLOCK DIAGRAM

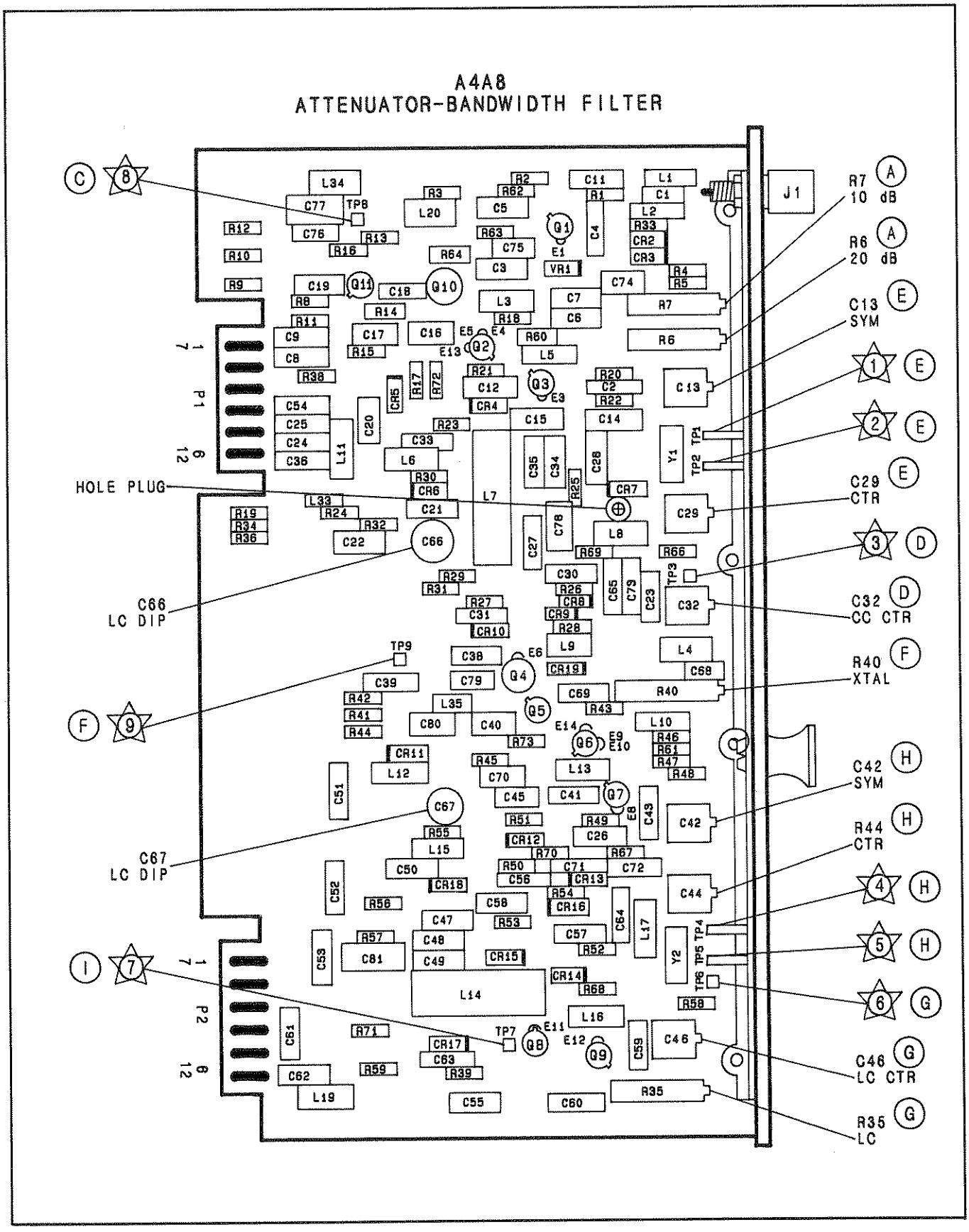

FIGURE 10. A4A8 ATTENUATOR-BANDWIDTH FILTER, COMPONENT LOCATIONS

A4A8 ATTENUATOR-BANDWIDTH FILTER
85662-60131

1

IN	SIGNAL	TO/FROM	FUNCTION BLOCK
1	GND		J
7	A10dB	A4A9P1-6	A
2	GND		
8	A20dB	A4A9P1-7	A
3	GND		J
9	GND		J
4	GND		J
10	BW7	A4A9P1-4	B
5	GND		J
11	BW63	A4A9P1-5	B
6	+10VF	A4A5P1-5	J
12	BW5	A4A9P1-12	B

2

IN	SIGNAL	TO/FROM	FUNCTION BLOCK
1	GND		J
7	GND		J
2	GND		J
8	GND		J
3	GND		J
9	GND		J
4	-15V		J
10	GND		J
5	+15V		J
11	+15V		J
6	21.4 MHz	A4A6A2,P1-12	I
12	GND		J

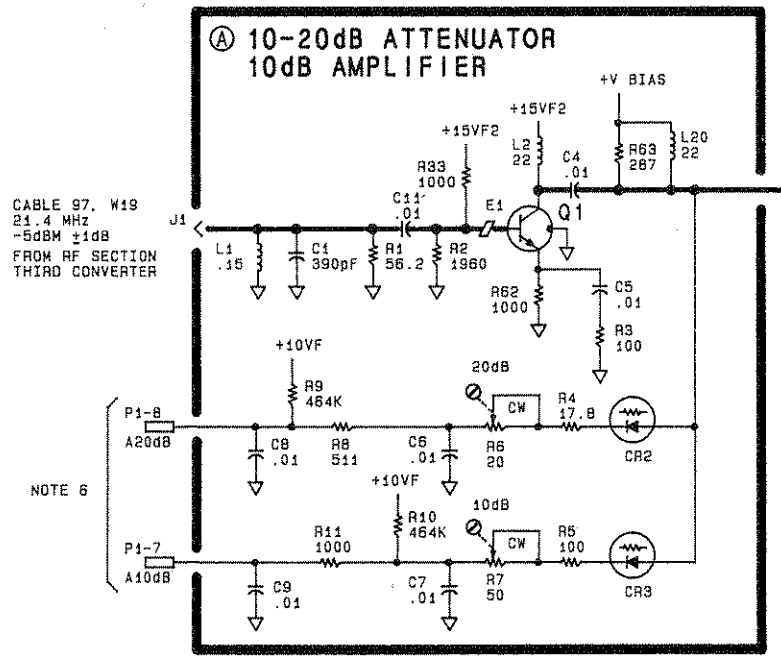

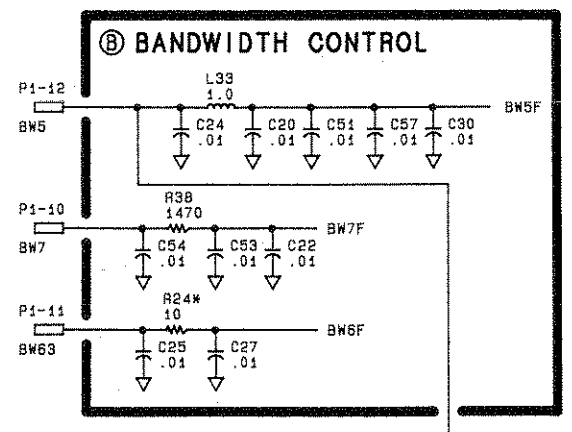

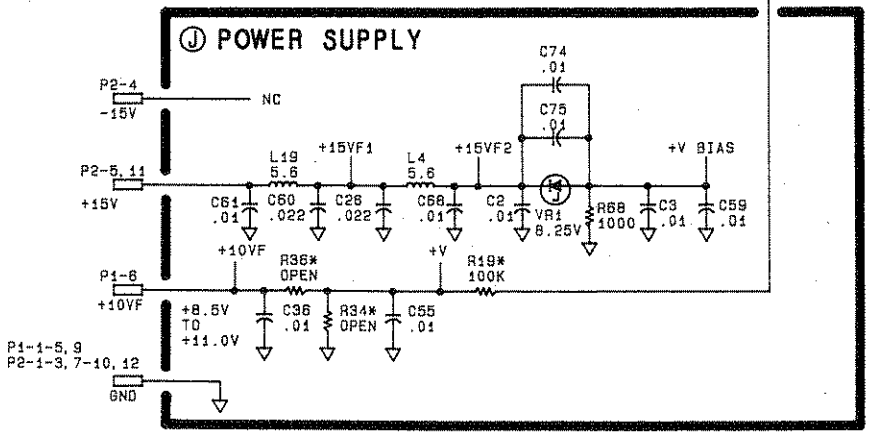

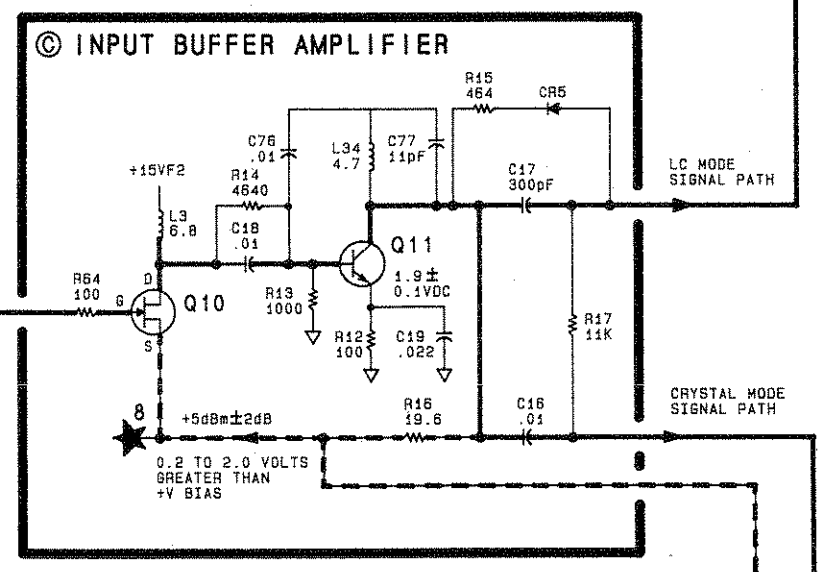

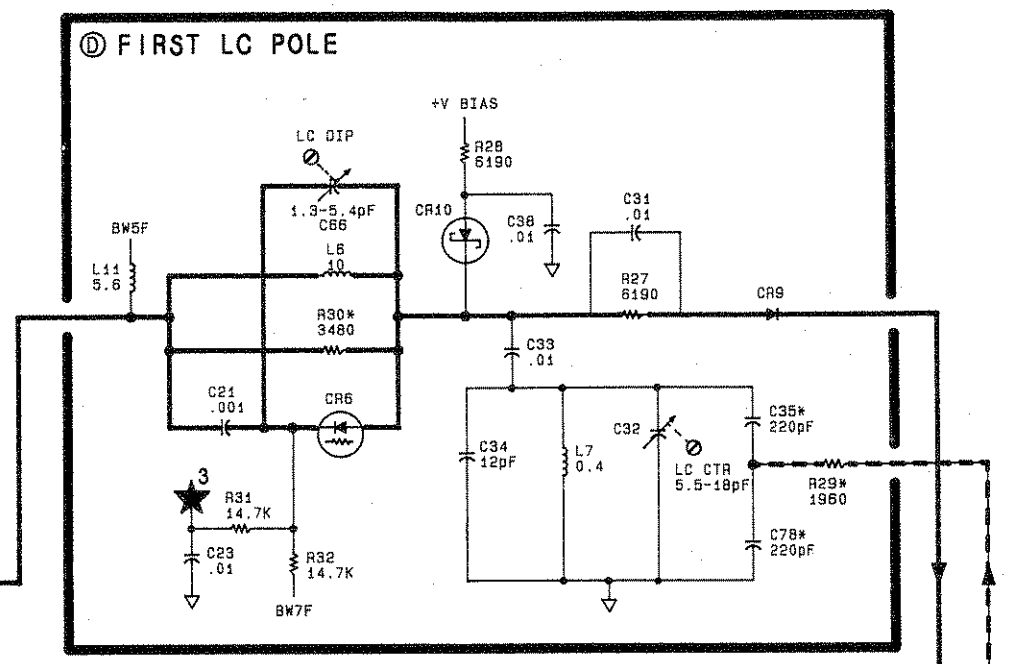

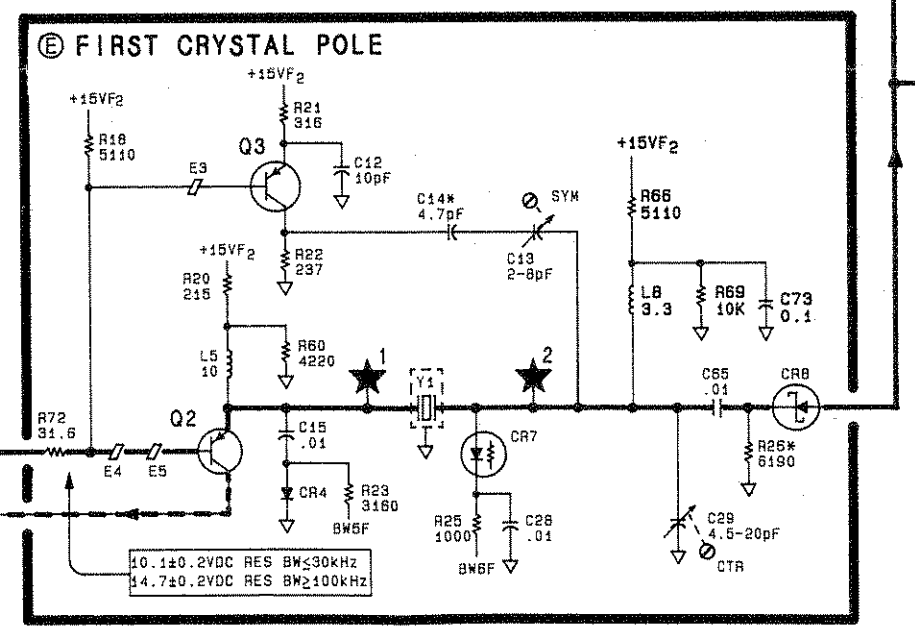

SERIAL PREFIX: 2403A

F-DISPLAY SECTION

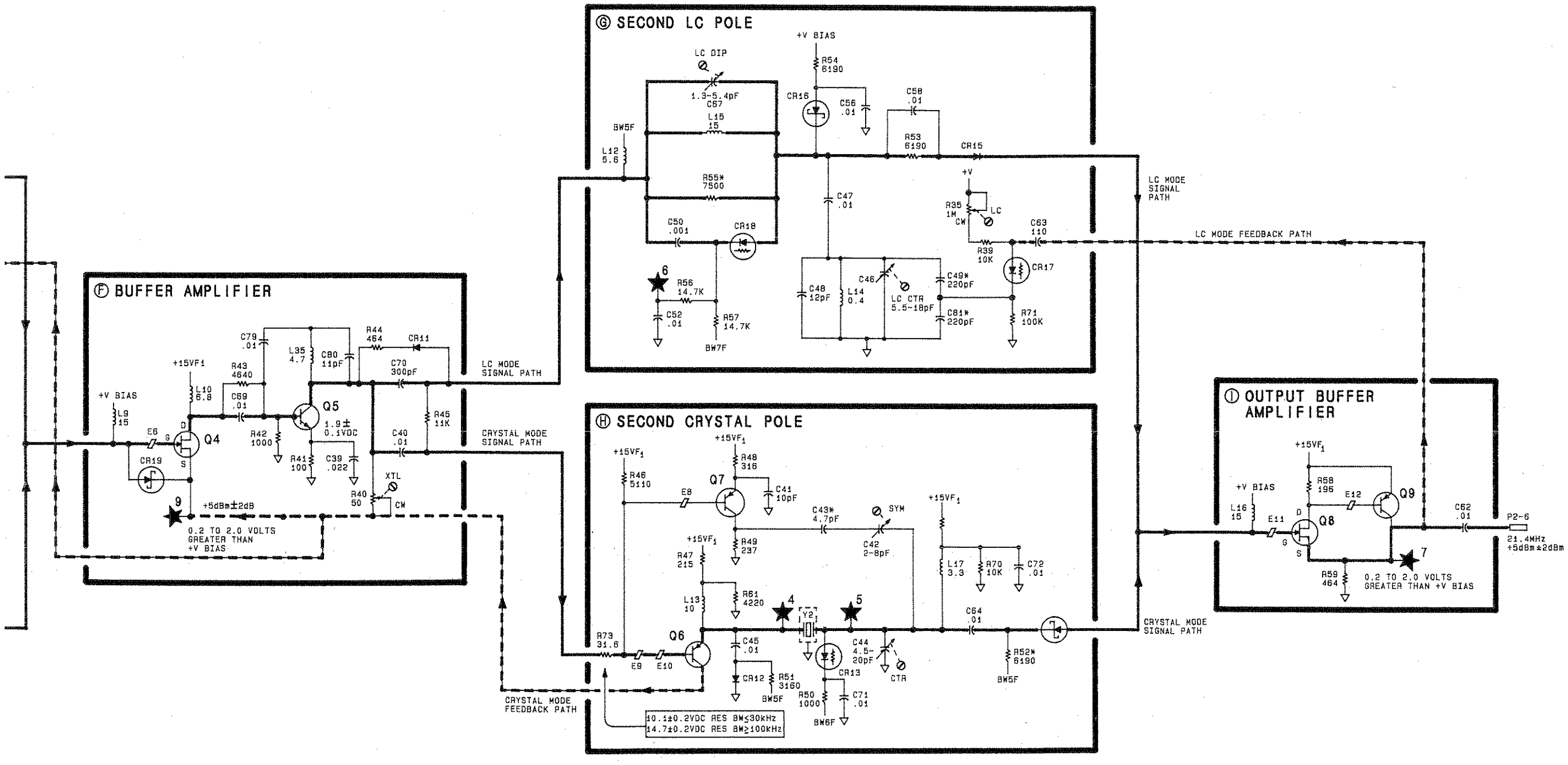

NOTES:

1. REFERENCE DESIGNATORS WITHIN THIS ASSEMBLY ARE ABBREVIATED. FOR COMPLETE REFERENCE DESIGNATION, PREFIX ABBREVIATION WITH ASSEMBLY DESIGNATION.
2. UNLESS OTHERWISE INDICATED:
   RESISTANCE IS IN OHMS (Ω)
   CAPACITANCE IS IN MICROFARADS (μF)
   INDUCTANCE IS IN MICROHENRIES (μH)
3. ASTERISK (*) DENOTES A FACTORY SELECTED COMPONENT; TYPICAL VALUE IS SHOWN. REFER TO SECTION 5 FOR FULL RANGE OF VALUES.
4. MNEMONIC TABLE:

MNEMONIC	DESCRIPTION
A20dB	ATTENUATION 20dB
A10dB	ATTENUATION 10dB
BW5	BANDWIDTH 5
BW7	BANDWIDTH 7 (LC MODE)
BW63	BANDWIDTH 63 (CRYSTAL MODE)

5. TABLE OF RESOLUTION BANDWIDTH CONTROL LINE VOLTAGES.

RESOLUTION BANDWIDTH	TYPICAL VALUES		
	BW5	BW7	BW63
3MHz	+14.8	+9.7	-14
1MHz	+14.8	+13.1	-14
300kHz	+14.8	+14.1	-14
100kHz	+14.8	+14.5	-14
30kHz	-.6	+14.3	+14.3
10kHz	-.6	+14.3	+9.3
3kHz	-.6	+14.3	+9.0
1kHz AND NARROWER	-.6	+14.3	+14.3

6.

REFERENCE LEVEL RES BW ≥ 3kHz	dBm			≤-10
REFERENCE LEVEL RES BW ≤ 1kHz	dBm	-10	-20	≤30
A20dB	LOG	0V	+9V	+9V
	LIN	0V	+9V	+9V
A10dB	LOG	+9V	0V	+9V
	LIN	+9V	0V	+9V
INPUT ATTENUATION · · · 0dB				

7. POWER LEVELS MEASURED UNDER THE FOLLOWING CONDITIONS:

INSTRUMENT PRESET	CAL. OUT FREQ.
CENTER FREQUENCY	0Hz
FREQUENCY SPAN	0dB
ATTENUATION	3kHZ
RESOLUTION BANDWIDTH	

8. SOURCE PIN ON Q8, Q4, AND Q10 IS INDICATE SQUARE PAD ON PC BOARD.
9. UNLESS OTHERWISE INDICATED: SIGNALS ENTER AT LEFT SIDE AND EXIT AT RIGHT SIDE OF FUNCTION BLOCKS.

A4A8

FIGURE 11. A4A8 ATTENUATOR-BANDWIDTH FILTER, SCHEMATIC DIAGRAM

A4A9 IF CONTROL, CIRCUIT DESCRIPTION

Control information for A4 IF-Video assembly is transmitted over the Instrument Bus from the A15 Controller and decoded by A4A9 IF Control.

Address Decoder (B)

The Address Decoder monitors ADR 0 – 4 and activates the input latches for addresses 20 and 21 when LTIO goes low. Address 20 activates U6, U8, and U9. Address 21 activates U3, U10, and U12:

	ADR 4 (16)	ADR 3 (8)	ADR 2 (4)	ADR 1 (2)	ADR Ø (1)
Address 20	H	L	H	L	L
Address 21	H	L	H	L	H

Input Latches (A)

The input latches hold whatever was present at their inputs when LTIO goes low. The output goes high to activate the function. For example, when U8 pin 5 is high, SG1Ø (step gain 10) is activated.

A0.0 to A15.9 dB Control (C)

Fourteen dB (A8dB, A4dB, and A2dB) of attenuation is accomplished by switching in discrete steps of attenuation in A4A5 Step Gain. The smaller steps (0.1 dB through 1.9 dB) are accomplished by sinking discrete amounts of current through a PIN diode attenuator in A4A5. The output of U13 goes low when a particular step of attenuation is required. The fixed resistors tied to edge-connector pin P2-7 determine the amount of current sunk (and hence the attenuation) of the PIN diode attenuator. The operation of the attenuator is described in A4A5.

IF Gain Control (D)

The IF Gain Control interfaces with A4A5 Step Gain, the Log Amplifiers in A4A2 and A4A3, and A4A1 Video Processor. A table on the A4A9 schematic describes the conditions under which the steps are used.

Bandwidth Control (E)

Bandwidths from 3 MHz to 100 kHz (BW ≥ +14.8V). These bandwidths are produced in the 21.4 MHz IF by four parallel tank circuits (two in A4A4 Bandwidth Filter and two on A4A8 Attenuator-Bandwidth Filter). Their Q (which determines bandwidth) is controlled by PIN diodes used as variable resistors. The resistance of these PIN diodes is determined by the average current through them, which is generated by Q9. Either R60, R61, or R62 is switched in by U2, depending on which bandwidth had been selected. These potentiometers (3 MHz, 1 MHz, and 300 kHz) determine the amount of current sunk by Q9, which in turn determines the bandwidth. If no current is sunk by Q9, the filters go to their highest Q (determined by factory-selected resistors), which yields the 100 kHz bandwidth.

TABLE 1. A4A9, REPLACEABLE PARTS (1 OF 3)

Reference Designation	HP Part Number	C D	Qty	Description	Mfr Code	Mfr Part Number
A4A9	85662-60147	6	1	BOARD ASSEMBLY, IF CONTROL	28480	85662-60147
A4A9C1	0180-0197	8	4	CAPACITOR-FXD 2.2UF+-10% 20VDC TA	56289	150D225X9020A2
A4A9C2	0180-0197	8		CAPACITOR-FXD 2.2UF+-10% 20VDC TA	56289	150D225X9020A2
A4A9C3	0180-0197	8		CAPACITOR-FXD 2.2UF+-10% 20VDC TA	56289	150D225X9020A2
A4A9C4	0180-0197	8		CAPACITOR-FXD 2.2UF+-10% 20VDC TA	56289	150D225X9020A2
A4A9C5				NOT ASSIGNED		
A4A9C6	0160-4832	4	15	CAPACITOR-FXD .01UF +-10% 100VDC CER	28480	0160-4832
A4A9C7	0160-3878	6	4	CAPACITOR-FXD 1000PF +-20% 100VDC CER	28480	0160-3878
A4A9C8	0160-3878	6		CAPACITOR-FXD 1000PF +-20% 100VDC CER	28480	0160-3878
A4A9C9	0160-3878	6		CAPACITOR-FXD 1000PF +-20% 100VDC CER	28480	0160-3878
A4A9C10	0160-3878	6		CAPACITOR-FXD 1000PF +-20% 100VDC CER	28480	0160-3878
A4A9C11	0160-4832	4		CAPACITOR-FXD .01UF +-10% 100VDC CER	28480	0160-4832
A4A9C12	0160-4832	4		CAPACITOR-FXD .01UF +-10% 100VDC CER	28480	0160-4832
A4A9C13	0160-4832	4		CAPACITOR-FXD .01UF +-10% 100VDC CER	28480	0160-4832
A4A9C14	0160-4832	4		CAPACITOR-FXD .01UF +-10% 100VDC CER	28480	0160-4832
A4A9C15	0160-4832	4		CAPACITOR-FXD .01UF +-10% 100VDC CER	28480	0160-4832
A4A9C16	0160-4832	4		CAPACITOR-FXD .01UF +-10% 100VDC CER	28480	0160-4832
A4A9C17	0160-4832	4		CAPACITOR-FXD .01UF +-10% 100VDC CER	28480	0160-4832
A4A9C18	0160-4832	4		CAPACITOR-FXD .01UF +-10% 100VDC CER	28480	0160-4832
A4A9C19	0160-4832	4		CAPACITOR-FXD .01UF +-10% 100VDC CER	28480	0160-4832
A4A9C20	0160-4832	4		CAPACITOR-FXD .01UF +-10% 100VDC CER	28480	0160-4832
A4A9C21	0160-4832	4		CAPACITOR-FXD .01UF +-10% 100VDC CER	28480	0160-4832
A4A9C22	0160-4832	4		CAPACITOR-FXD .01UF +-10% 100VDC CER	28480	0160-4832
A4A9C23	0160-4832	4		CAPACITOR-FXD .01UF +-10% 100VDC CER	28480	0160-4832
A4A9C24	0160-4832	4		CAPACITOR-FXD .01UF +-10% 100VDC CER	28480	0160-4832
A4A9CR1	1901-0040	1	12	DIODE-SWITCHING 30V 50MA 2NS DO-35	28480	1901-0040
A4A9CR2	1901-0040	1		DIODE-SWITCHING 30V 50MA 2NS DO-35	28480	1901-0040
A4A9CR3				NOT ASSIGNED		
A4A9CR4	1901-0050	3	6	DIODE-SWITCHING 80V 200MA 2NS DO-35	28480	1901-0050
A4A9CR5	1901-0050	3		DIODE-SWITCHING 80V 200MA 2NS DO-35	28480	1901-0050
A4A9CR6	1901-0040	1		DIODE-SWITCHING 30V 50MA 2NS DO-35	28480	1901-0040
A4A9CR7	1901-0040	1		DIODE-SWITCHING 30V 50MA 2NS DO-35	28480	1901-0040
A4A9CR8	1901-0050	3		DIODE-SWITCHING 80V 200MA 2NS DO-35	28480	1901-0050
A4A9CR9	1901-0050	3		DIODE-SWITCHING 80V 200MA 2NS DO-35	28480	1901-0050
A4A9CR10	1901-0050	3		DIODE-SWITCHING 80V 200MA 2NS DO-35	28480	1901-0050
A4A9CR11	1901-0040	1		DIODE-SWITCHING 30V 50MA 2NS DO-35	28480	1901-0040
A4A9CR12	1901-0040	1		DIODE-SWITCHING 30V 50MA 2NS DO-35	28480	1901-0040
A4A9CR13	1901-0040	1		DIODE-SWITCHING 30V 50MA 2NS DO-35	28480	1901-0040
A4A9CR14	1901-0040	1		DIODE-SWITCHING 30V 50MA 2NS DO-35	28480	1901-0040
A4A9CR15	1901-0040	1		DIODE-SWITCHING 30V 50MA 2NS DO-35	28480	1901-0040
A4A9CR16	1910-0016	0	2	DIODE-GE 60V 60MA 1US DO-7	28480	1910-0016
A4A9CR17	1910-0016	0		DIODE-GE 60V 60MA 1US DO-7	28480	1910-0016
A4A9CR18	1901-0040	1		DIODE-SWITCHING 30V 50MA 2NS DO-35	28480	1901-0040
A4A9CR19	1901-0040	1		DIODE-SWITCHING 30V 50MA 2NS DO-35	28480	1901-0040
A4A9CR20	1901-0040	1		DIODE-SWITCHING 30V 50MA 2NS DO-35	28480	1901-0040
A4A9CR21	1901-0050	3		DIODE-SWITCHING 80V 200MA 2NS DO-35	28480	1901-0050
A4A9L1	9100-1618	1	1	INDUCTOR RF-CH-MLD 5.6UH 10%	28480	9100-1618
A4A9Q1	1854-0477	7	1	TRANSISTOR NPN 2N2222A SI TO-18 PD=500MW	04713	2N2222A
A4A9Q2	1853-0281	9	9	TRANSISTOR PNP 2N2907A SI TO-18 PD=400MW	04713	2N2907A
A4A9Q3	1853-0281	9		TRANSISTOR PNP 2N2907A SI TO-18 PD=400MW	04713	2N2907A
A4A9Q4				NOT ASSIGNED		
A4A9Q5				NOT ASSIGNED		
A4A9Q6	1854-0404	0	4	TRANSISTOR NPN SI TO-18 PD=360MW	28480	1854-0404
A4A9Q7				NOT ASSIGNED		
A4A9Q8	1854-0404	0		TRANSISTOR NPN SI TO-18 PD=360MW	28480	1854-0404
A4A9Q9	1854-0404	0		TRANSISTOR NPN SI TO-18 PD=360MW	28480	1854-0404
A4A9Q10	1854-0404	0		TRANSISTOR NPN SI TO-18 PD=360MW	28480	1854-0404
A4A9Q11-A4A9Q19				NOT ASSIGNED		
A4A9Q20	1853-0281	9		TRANSISTOR PNP 2N2907A SI TO-18 PD=400MW	04713	2N2907A
A4A9Q21	1853-0281	9		TRANSISTOR PNP 2N2907A SI TO-18 PD=400MW	04713	2N2907A
A4A9Q22				NOT ASSIGNED		
A4A9Q23				NOT ASSIGNED		
A4A9Q24				NOT ASSIGNED		
A4A9Q25	1853-0281	9		TRANSISTOR PNP 2N2907A SI TO-18 PD=400MW	04713	2N2907A
A4A9Q26	1853-0281	9		TRANSISTOR PNP 2N2907A SI TO-18 PD=400MW	04713	2N2907A
A4A9Q27	1853-0281	9		TRANSISTOR PNP 2N2907A SI TO-18 PD=400MW	04713	2N2907A
A4A9Q28	1853-0281	9		TRANSISTOR PNP 2N2907A SI TO-18 PD=400MW	04713	2N2907A
A4A9Q29	1853-0281	9		TRANSISTOR PNP 2N2907A SI TO-18 PD=400MW	04713	2N2907A

TABLE 1. A4A9, REPLACEABLE PARTS (2 OF 3)

Reference Designation	HP Part Number	CD	Qty	Description	Mfr Code	Mfr Part Number
A4A9R1	0757-0442	9	15	RESISTOR 10K 1% .125W F TC=0+-100	24546	C4-1/8-T0-1002-F
A4A9R2	0757-0442	9		RESISTOR 10K 1% .125W F TC=0+-100	24546	C4-1/8-T0-1002-F
A4A9R3				NOT ASSIGNED		
A4A9R4	0757-0442	9		RESISTOR 10K 1% .125W F TC=0+-100	24546	C4-1/8-T0-1002-F
A4A9R5	0757-0442	9		RESISTOR 10K 1% .125W F TC=0+-100	24546	C4-1/8-T0-1002-F
A4A9R6				NOT ASSIGNED		
A4A9R7	0757-0442	9		RESISTOR 10K 1% .125W F TC=0+-100	24546	C4-1/8-T0-1002-F
A4A9R8				NOT ASSIGNED		
A4A9R9				NOT ASSIGNED		
A4A9R10	0698-0085	0	4	RESISTOR 2.61K 1% .125W F TC=0+-100	24546	C4-1/8-T0-2611-F
A4A9R11	0698-0085	0		RESISTOR 2.61K 1% .125W F TC=0+-100	24546	C4-1/8-T0-2611-F
A4A9R12	0757-0442	9		RESISTOR 10K 1% .125W F TC=0+-100	24546	C4-1/8-T0-1002-F
A4A9R13	0757-0280	3	2	RESISTOR 1K 1% .125W F TC=0+-100	24546	C4-1/8-T0-1001-F
A4A9R14	0757-0442	9		RESISTOR 10K 1% .125W F TC=0+-100	24546	C4-1/8-T0-1002-F
A4A9R15	0757-0442	9		RESISTOR 10K 1% .125W F TC=0+-100	24546	C4-1/8-T0-1002-F
A4A9R16	0757-0317	7	1	RESISTOR 1.33K 1% .125W F TC=0+-100	24546	C4-1/8-T0-1331-F
A4A9R17	0757-0442	9		RESISTOR 10K 1% .125W F TC=0+-100	24546	C4-1/8-T0-1002-F
A4A9R18	0757-0442	9		RESISTOR 10K 1% .125W F TC=0+-100	24546	C4-1/8-T0-1002-F
A4A9R19	0757-0442	9		RESISTOR 10K 1% .125W F TC=0+-100	24546	C4-1/8-T0-1002-F
A4A9R20	0757-0442	9		RESISTOR 10K 1% .125W F TC=0+-100	24546	C4-1/8-T0-1002-F
A4A9R21	0757-0442	9		RESISTOR 10K 1% .125W F TC=0+-100	24546	C4-1/8-T0-1002-F
A4A9R22	0757-0123	3	1	RESISTOR 34.8K 1% .125W F TC=0+-100	28480	0757-0123
A4A9R23	0757-0467	8	1	RESISTOR 121K 1% .125W F TC=0+-100	24546	C4-1/8-T0-1213-F
A4A9R24	0698-3159	5	1	RESISTOR 26.1K 1% .125W F TC=0+-100	24546	C4-1/8-T0-2612-F
A4A9R25	0698-4500	2	1	RESISTOR 57.6K 1% .125W F TC=0+-100	24546	C4-1/8-T0-5762-F
A4A9R26	0698-4498	7	1	RESISTOR 53.6K 1% .125W F TC=0+-100	24546	C4-1/8-T0-5362-F
A4A9R27	0757-0442	9		RESISTOR 10K 1% .125W F TC=0+-100	24546	C4-1/8-T0-1002-F
A4A9R28	0757-0456	7	1	RESISTOR 51.1K 1% .125W F TC=0+-100	24546	C4-1/8-T0-5112-F
A4A9R29	0757-0428	3	1	RESISTOR 750 1% .125W F TC=0+-100	24546	C4-1/8-T0-751-F
A4A9R30	0757-0438	3	7	RESISTOR 5.11K 1% .125W F TC=0+-100	24546	C4-1/8-T0-5111-F
A4A9R31				NOT ASSIGNED		
A4A9R32				NOT ASSIGNED		
A4A9R33	0757-0438	3		RESISTOR 5.11K 1% .125W F TC=0+-100	24546	C4-1/8-T0-5111-F
A4A9R34	0757-0438	3		RESISTOR 5.11K 1% .125W F TC=0+-100	24546	C4-1/8-T0-5111-F
A4A9R35	0757-0438	3		RESISTOR 5.11K 1% .125W F TC=0+-100	24546	C4-1/8-T0-5111-F
A4A9R36	0757-0438	3		RESISTOR 5.11K 1% .125W F TC=0+-100	24546	C4-1/8-T0-5111-F
A4A9R37				NOT ASSIGNED		
A4A9R38				NOT ASSIGNED		
A4A9R39				NOT ASSIGNED		
A4A9R40	0757-0444	1	1	RESISTOR 12.1K 1% .125W F TC=0+-100	24546	C4-1/8-T0-1212-F
A4A9R41	0698-8824	1	1	RESISTOR 562K 1% .125W F TC=0+-100	28480	0698-8824
A4A9R42	0698-3455	4		RESISTOR 261K 1% .125W F TC=0+-100	24546	C4-1/8-T0-2613-F
A4A9R43	0698-0085	0		RESISTOR 2.61K 1% .125W F TC=0+-100	24546	C4-1/8-T0-2611-F
A4A9R44	0757-0428	1	1	RESISTOR 1.62K 1% .125W F TC=0+-100	24546	C4-1/8-T0-1621-F
A4A9R45	0757-0280	3		RESISTOR 1K 1% .125W F TC=0+-100	24546	C4-1/8-T0-1001-F
A4A9R46	0757-0419	0	2	RESISTOR 681 1% .125W F TC=0+-100	24546	C4-1/8-T0-681R-F
A4A9R47	0757-0438	3		RESISTOR 5.11K 1% .125W F TC=0+-100	24546	C4-1/8-T0-5111-F
A4A9R48	0698-0083	8	1	RESISTOR 1.96K 1% .125W F TC=0+-100	24546	C4-1/8-T0-1961-F
A4A9R49	0698-3260	9	3	RESISTOR 464K 1% .125W F TC=0+-100	28480	0698-3260
A4A9R50	0698-3260	9		RESISTOR 464K 1% .125W F TC=0+-100	28480	0698-3260
A4A9R51	0757-1094	9	1	RESISTOR 1.47K 1% .125W F TC=0+-100	24546	C4-1/8-T0-1471-F
A4A9R52	0698-3150	6	1	RESISTOR 2.37K 1% .125W F TC=0+-100	24546	C4-1/8-T0-2371-F
A4A9R53	0698-3150	4	1	RESISTOR 23.7K 1% .125W F TC=0+-100	24546	C4-1/8-T0-2372-F
A4A9R54	0698-3260	9		RESISTOR 464K 1% .125W F TC=0+-100	28480	0698-3260
A4A9R55	0757-0442	9		RESISTOR 10K 1% .125W F TC=0+-100	24546	C4-1/8-T0-1002-F
A4A9R56	0757-0279	0	2	RESISTOR 3.16K 1% .125W F TC=0+-100	24546	C4-1/8-T0-3161-F
A4A9R57	0698-3153	9	1	RESISTOR 3.83K 1% .125W F TC=0+-100	24546	C4-1/8-T0-3831-F
A4A9R58				NOT ASSIGNED		
A4A9R59	0698-0085	0		RESISTOR 2.61K 1% .125W F TC=0+-100	24546	C4-1/8-T0-2611-F
A4A9R60	2100-3109	2	1	RESISTOR-TRMR 2K 10% C SIDE-ADJ 17-TRN	02111	43P202
A4A9R61	2100-3103	6	1	RESISTOR-TRMR 10K 10% C SIDE-ADJ 17-TRN	02111	43P103
A4A9R62	2100-3054	6	1	RESISTOR-TRMR 50K 10% C SIDE-ADJ 17-TRN	02111	43P503
A4A9R63	0757-0419	0		RESISTOR 681 1% .125W F TC=0+-100	24546	C4-1/8-T0-681R-F
A4A9R64	0757-0438	3		RESISTOR 5.11K 1% .125W F TC=0+-100	24546	C4-1/8-T0-5111-F
A4A9R65	2100-3094	4	1	RESISTOR-TRMR 100K 10% C SIDE-ADJ 17-TRN	02111	43P104
A4A9R66	2100-3161	6	1	RESISTOR-TRMR 20K 10% C SIDE-ADJ 17-TRN	02111	43P203
A4A9R67	0757-0465	6	1	RESISTOR 100K 1% .125W F TC=0+-100	24546	C4-1/8-T0-1003-F
A4A9R68	0757-0279	0		RESISTOR 3.16K 1% .125W F TC=0+-100	24546	C4-1/8-T0-3161-F
A4A9R69*	0698-3455	4	2	RESISTOR 261K 1% .125W F TC=0+-100	24546	C4-1/8-T0-2613-F
A4A9R70*	0698-3456	5	1	RESISTOR 287K 1% .125W F TC=0+-100	24546	C4-1/8-T0-2873-F
A4A9R71*	0698-3453	2	1	RESISTOR 196K 1% .125W F TC=0+-100	24546	C4-1/8-T0-1963-F
A4A9TP1	1251-0600	0	2	CONNECTOR-SGL CONT PIN 1.14-MM-BSC-SZ SQ	28480	1251-0600
A4A9TP2	1251-0600	0		CONNECTOR-SGL CONT PIN 1.14-MM-BSC-SZ SQ	28480	1251-0600

*Indicates factory selected value

TABLE 1. A4A9, REPLACEABLE PARTS (3 OF 3)

Reference Designation	HP Part Number	C D	Qty	Description	Mfr Code	Mfr Part Number
A4A9U1	5081-8117	3	1	SCREEN 1826-0092	28480	5081-8117
A4A9U2	1820-1418	7	3	IC DCDR TTL LS BCD-TO-DEC 4-TO-10-LINE	01295	SN74LS42N
A4A9U3	1820-1195	7	1	IC FF TTL LS D-TYPE POS-EDGE-TRIG COM	01295	SN74LS175N
A4A9U4	1820-1418	7		IC DCDR TTL LS BCD-TO-DEC 4-TO-10-LINE	01295	SN74LS42N
A4A9U5				NOT ASSIGNED		
A4A9U6	1820-1196	8	5	IC FF TTL LS D-TYPE POS-EDGE-TRIG COM	01295	SN74LS174N
A4A9U7	1820-1216	3	1	IC DCDR TTL LS 3-TO-8-LINE 3-INP	01295	SN74LS138N
A4A9U8	1820-1196	8		IC FF TTL LS D-TYPE POS-EDGE-TRIG COM	01295	SN74LS174N
A4A9U9	1820-1196	8		IC FF TTL LS D-TYPE POS-EDGE-TRIG COM	01295	SN74LS174N
A4A9U10	1820-1196	8		IC FF TTL LS D-TYPE POS-EDGE-TRIG COM	01295	SN74LS174N
A4A9U11	1820-1196	8		IC FF TTL LS D-TYPE POS-EDGE-TRIG COM	01295	SN74LS174N
A4A9U12	1820-1418	7		IC DCDR TTL LS BCD-TO-DEC 4-TO-10-LINE	01295	SN74LS42N
A4A9U13	1820-0668	7	1	IC BFR TTL NON-INV HEX 1-INP	01295	SN7407N
A4A9U14	1820-0471	0	3	IC INV TTL HEX 1-INP	01295	SN7486N
A4A9U15	1820-0471	0		IC INV TTL HEX 1-INP	01295	SN7406N
A4A9U16	1820-0471	0		IC INV TTL HEX 1-INP	01295	SN7406N
A4A9VR1	1902-0041	4	1	DIODE-ZNR 5.11V 5% DO-35 PD=.4W	28480	1902-0041
A4A9VR2	1902-3203	6	1	DIODE-ZNR 14.7V 5% DO-35 PD=.4W	28480	1902-3203

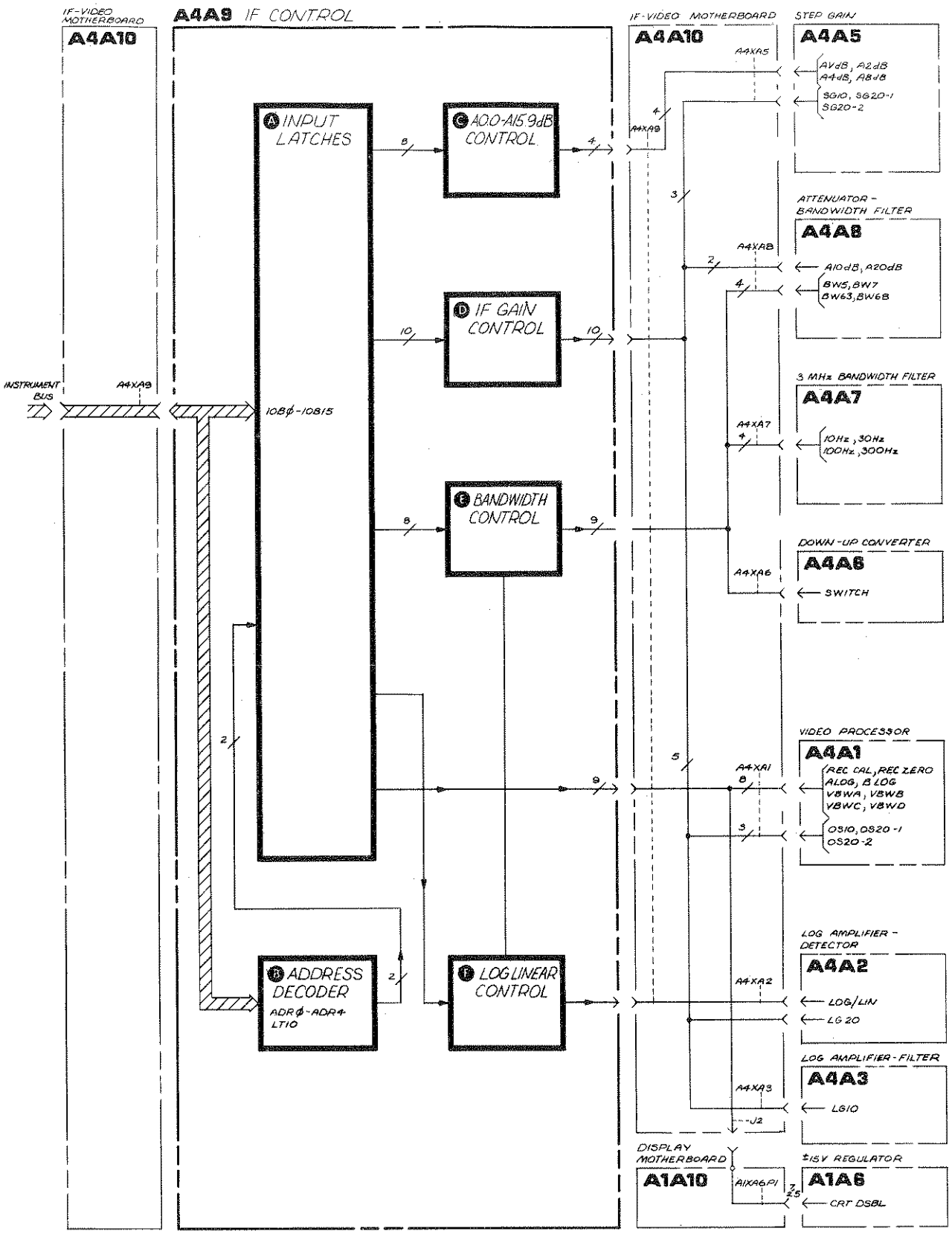

FIGURE 2. A4A9 IF CONTROL, BLOCK DIAGRAM

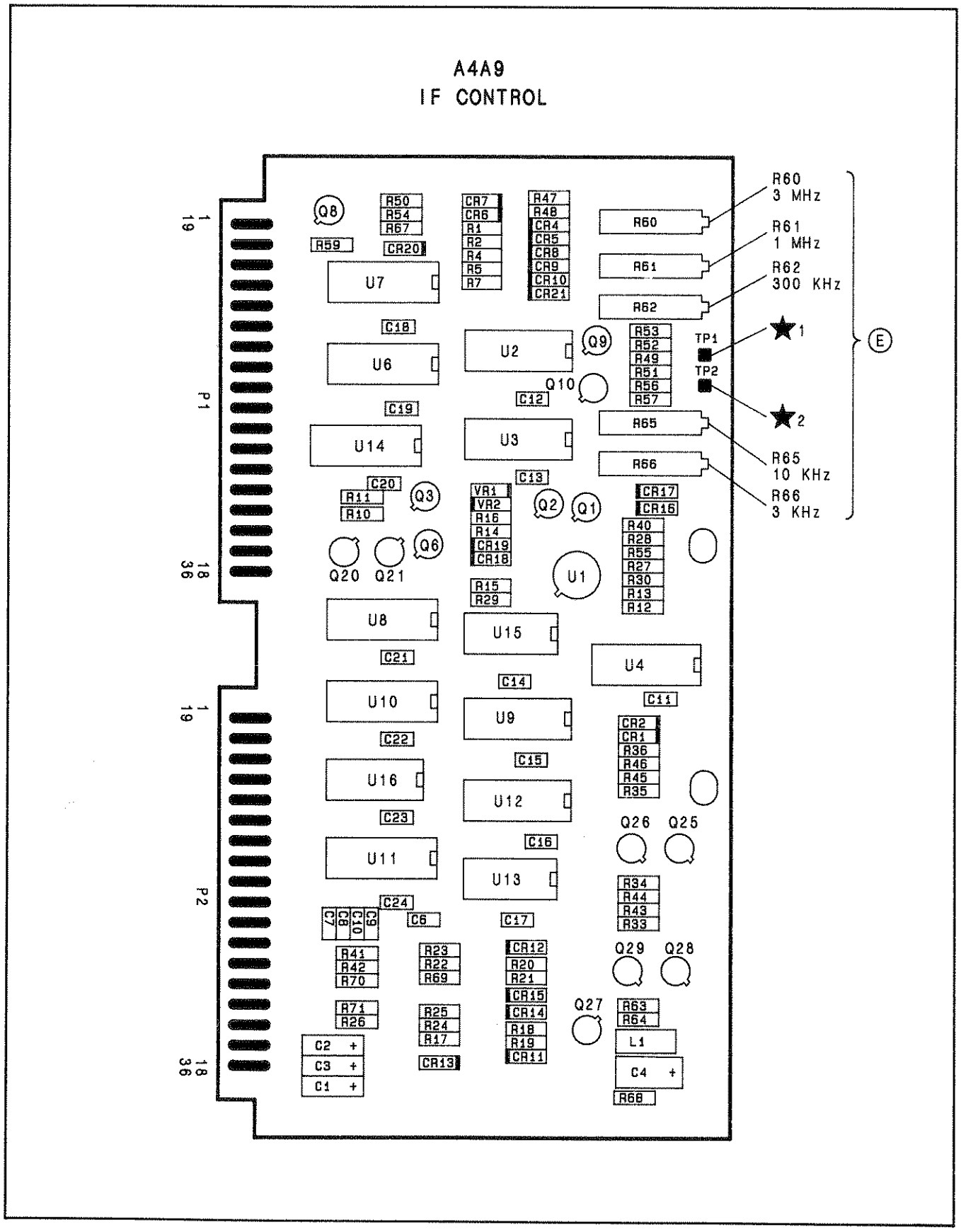

FIGURE 3. A4A9 IF CONTROL, COMPONENT LOCATIONS

A4A9 IF CONTROL
85662-60147

SIGNAL	TO/FROM	FUNCTION BLOCK
REC CAL	A4A1P2-2	A
ALOG	A4A1P1-12	A
REC ZERO	A4A1P2-1	A
BLOG	A4A1P1-6	A
CRT DSBL	A1A6P1-7, 25	A
BW6P	A4A4P1-10	E
BW7	A4A8P1-10	E
LTIO	A4A10J1-49	B
BW63	A4A8P1-11	E
ADRØ	A4A10J1-23	B
A1ØdB	A4A8P1-7	D
ADR2	A4A10J1-25	B
A2ØdB	A4A8P1-8	D
ADR4	A4A10J1-27	B
SG2Ø-2	A4A5P1-10	D
ADR3	A4A10J1-26	B
SG2Ø-1	A4A5P1-9	D
ADR1	A4A10J1-24	B
SG1Ø	A4A5P1-8	D
IOB12	A4A10J1-15	A
SWITCH	A4A6P1-7	E
IOB14	A4A10J1-17	A
BW5	A4A8, A4A3, A4A4	E
IOB15	A4A10J1-18	A
LOG/LIN	A4A2, A4A3	F
IOB13	A4A10J1-16	A
OS1Ø	A4A1P1-8	D
VBWD	A4A1P1-2	A
OS2Ø-1	A4A1P1-9	D
VBWC	A4A1P1-3	A
OS2Ø-2	A4A1P1-10	D
VBWB	A4A1P1-4	A
GND		G
VBWA	A4A1P1-5	A
LG2Ø	A4A2P2-7	D
LG1Ø	A4A3P2-7	D

P2

PIN	SIGNAL	TO/FROM	FUNCTION BLOCK
1	IOB11	A4A10J1-14	A
19	IOB6	A4A10J1-9	A
2	IOB9	A4A10J1-12	A
20	IOB8	A4A10J1-11	A
3	IOB7	A4A10J1-10	A
21	IOB1Ø	A4A10J1-13	A
4	A4dB	A4A5P2-16	C
22	A2dB	A4A5P2-17	C
5	A8dB	A4A5P2-15	C
23	GND		G
6	GND		G
24	GND		G
7	AVdB	A4A5P2-5	C
25	IOB5	A4A10J1-8	A
8	GND		G
26	IOB3	A4A10J1-6	A
9	GND		G
27	IOB1	A4A10J1-4	A
10	GND		G
28	IOBØ	A4A10JI-3	A
11	GND		G
29	IOB2	A4A10J1-5	A
12	30Hz	A4A7P2-1	E
30	IOB4	A4A10J1-7	A
13	10Hz	A4A7P2-2	E
31	GND		G
14	300Hz	A4A7P2-7	E
32	GND		G
15	100Hz	A4A7P2-8	E
33	GND		G
16	+5V		G
34	+5V		G
17	-15V		G
35	-15V		G
18	+15V		G
36	+15V		G

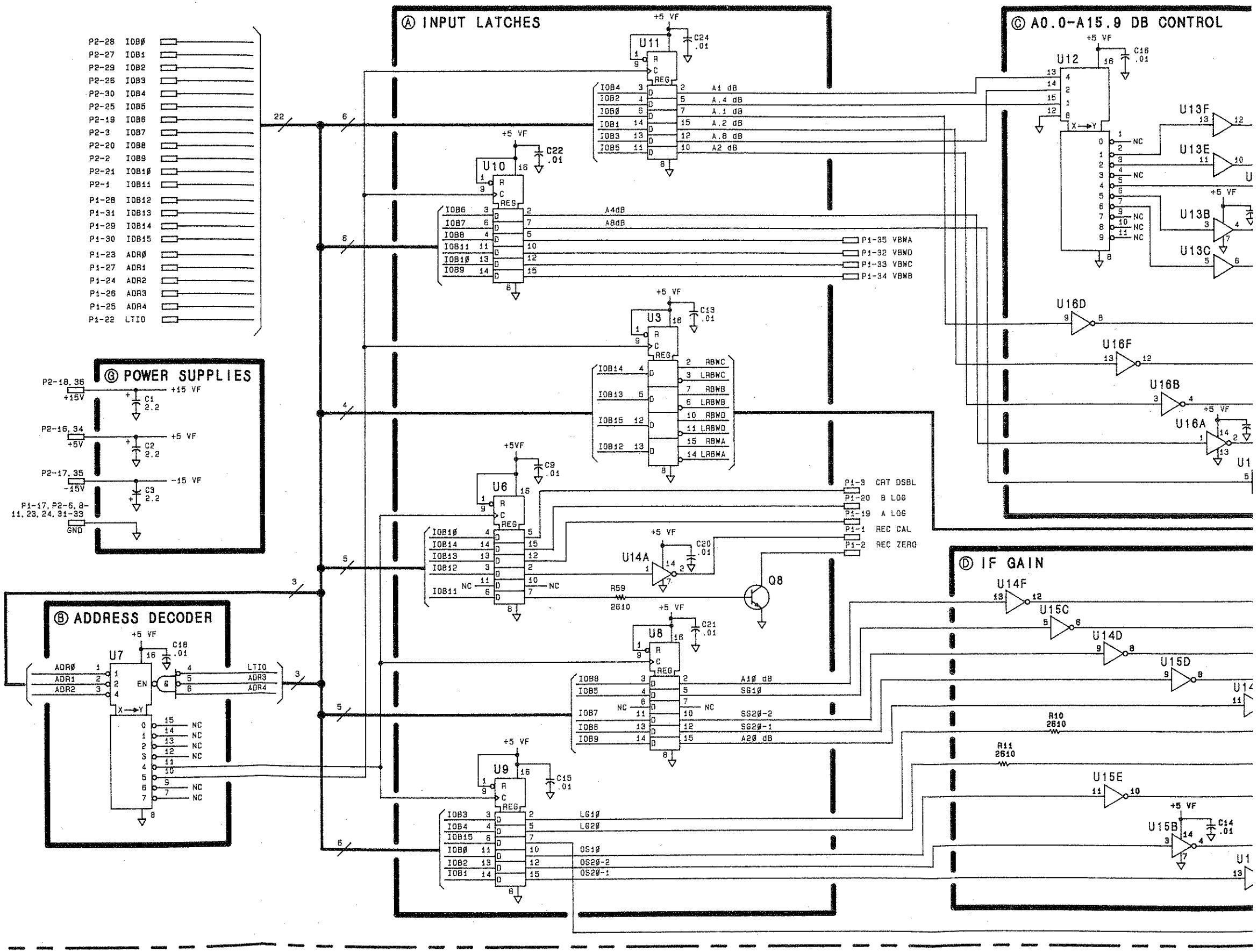

IAL PREFIX: 2403A

)ISPLAY SECTION

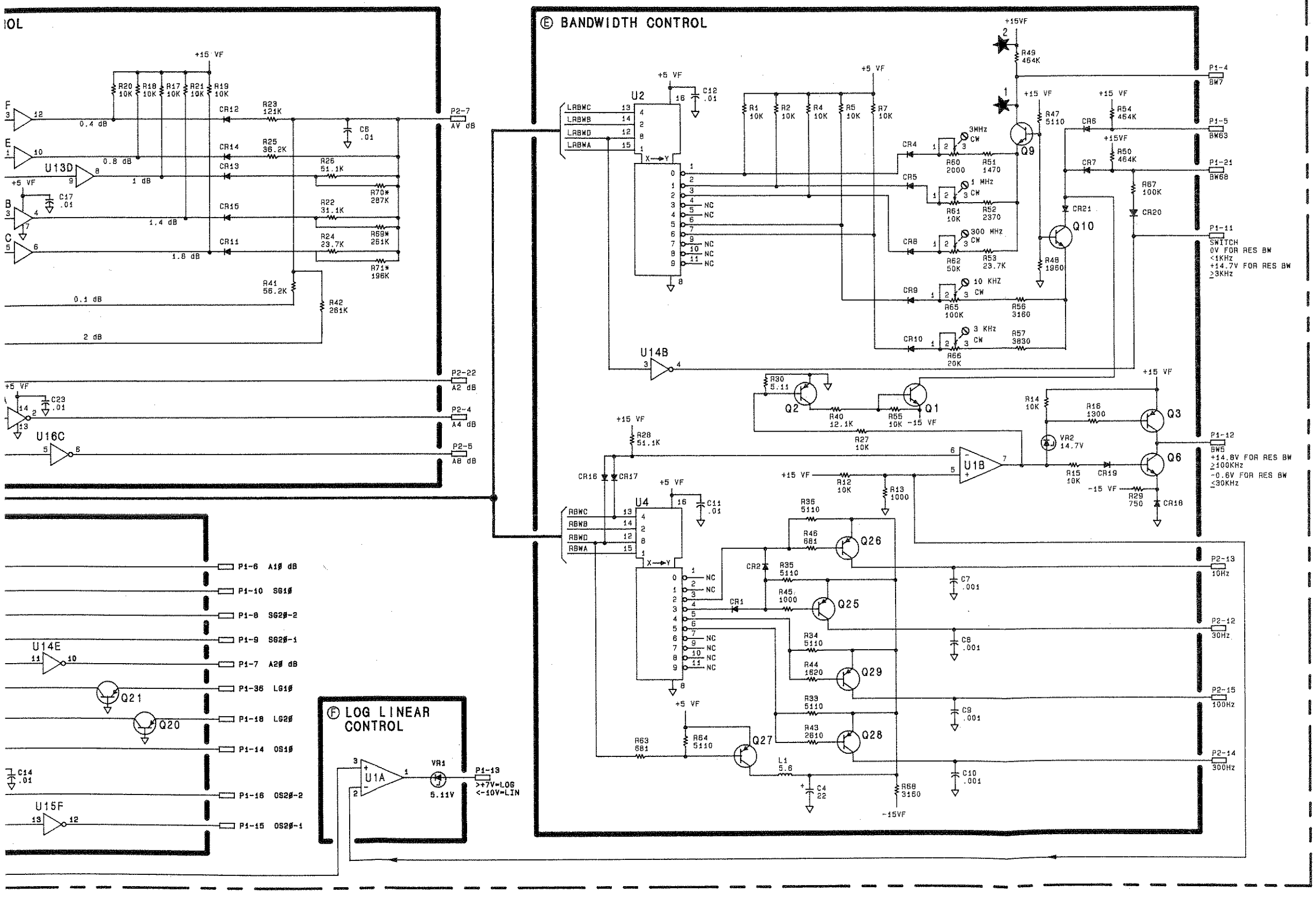

NOTES:

1. REFERENCE DESIGNATORS WITHIN THIS ASSEMBLY ARE ABBREVIATED. FOR COMPLETE REFERENCE DESIGNATION, PREFIX ABBREVIATION WITH ASSEMBLY DESIGNATION.
2. UNLESS OTHERWISE INDICATED:
   RESISTANCE IS IN OHMS (Ω)
   CAPACITANCE IS IN MICROFARADS (μF)
   INDUCTANCE IS IN MICROHENRIES (μH)
3. UNLESS OTHERWISE INDICATED:
   SIGNALS ENTER AT LEFT SIDE OR TOP AND EXIT AT RIGHT SIDE OR BOTTOM OF FUNCTION BLOCKS.
4. MNEMONIC TABLE:

MNEMONIC	DESCRIPTION
A.1 DB A.2 DB A.4 DB A.8 DB A1 DB	ATTENUATOR STEPS FOR A4A5 STEP GAIN
A2 DB A4 DB A8 DB A1ø DB A2ø DB AV DB	ATTENUATOR STEPS FOR A4A8 ATTEN-BW FILTER
ADRØ-4	INSTRUMENT BUS ADDRESS BITS
ALOG BLOG	LOG EXPAND CONTROLS FOR A4A1 VIDEO PROCESSOR
BW5 BW7 BW63 BW68	BANDWIDTH CONTROL LINES
IOBØ-15	INSTRUMENT BUS DATA BITS
LG1ø LG2ø LOG/LIN	LINEAR GAIN STEPS AND CONTROL FOR LOG AMPLIFIERS
LTIO	
OS1ø OS2ø-1 OS2ø-2	OFFSET GAIN STEPS FOR A4A1 VIDEO PROCESSOR
REC CAL REC ZERO SG1ø SG2ø-1 SG2ø-2	RECORDER CALIBRATE RECORDER ZERO STEP GAIN 10 DB STEP GAIN 20 DB #1 STEP GAIN 20 DB #2
VBWA VBWB VBWC VBWD	VIDEO BANDWITH CONTROL LINES

5. UNLESS OTHERWISE INDICATED LOGIC LEVELS ARE:
   +2.0V TO +6.0V = LOGIC '1' HIGH=H
   0V TO +0.8V = LOGIC '0' LOW=BLANK
6. ASTERISK (*) DENOTES FACTORY SELECTED COMPONENTS TYPICAL VALUE IS SHOWN.
7. U13A, U14C, U15A, AND U16E ARE NOT USED.

A4A9

FIGURE 4. A4A9 IF CONTROL, SCHEMATIC DIAGRAM (1 OF 2)

NOTES:

8. 0.0-15.9 dB CONTROL TRUTH TABLE (LEVELS AT OUTPUT OF LATCHES U10 AND U11):

CONTROL LINE \ REF LEVEL (dBM)	0	-.1	-.2	-.3	-.4	-.5	-.6	-.7	-.8	-.9	-1.0	-1.1	-1.2	-1.3	-1.4	-1.5	-1.6	-1.7	-1.8	-1.9
A.1 dB	H		H		H		H		H		H		H		H		H		H	
A.2 dB			H	H			H	H					H	H			H	H		
A.4 dB			H	H	H	H							H	H	H	H				
A.8 dB	H	H									H	H								
A1 dB	H	H	H	H	H	H	H	H	H	H										

REFERENCE LEVEL (dBM)	A2dB	A4dB	A8dB
-10			H
-11			H
-12	H	H	
-13	H	H	
-14		H	
-15		H	
-16	H		
-17	H		
-18			
-19			

9. RESOLUTION BANDWIDTH TRUTH TABLE:

RESOLUTION BANDWIDTH	RBWD	RBWC	RBWB	RBWA
3 MHz	H	H	H	H
1 MHz	H	H	H	
300 KHz	H	H		H
100 KHz	H	H		
30 KHz	H		H	H
10 KHz	H		H	
3 KHz	H			H
1 KHz		H	H	
300 Hz		H		H
100 Hz		H		
30 Hz			H	H
10 Hz			H	

VIDEO BANDWIDTH TRUTH TABLE:

VIDEO BANDWIDTH	VBWD	VBWC	VBWB	VBWA
3 MHz	H	H	H	H
1 MHz	H	H	H	
300 KHz	H	H		H
100 KHz	H	H		
30 KHz	H		H	H
10 KHz	H		H	
3 KHz	H			H
1 KHz		H	H	
300 Hz		H		H
100 Hz		H		
30 Hz			H	H
10 Hz			H	
3 Hz				H
1 Hz				

10. 10 dB GAIN STEP TRUTH TABLE (LEVELS AT OUTPUT OF LATCHES U8 AND U9):

REFERENCE LEVEL RES BW ≥3 KHz	dBM			-10	-20	-30	-40	-50	-60	-70	-80	-90	-100	-110
REFERENCE LEVEL RES BW ≤1 KHz	dBM	-10	-20	-30	-40	-50	-60	-70	-80	-90	-100	-110	-120	-130
A1Ø dB	LOG		H											
	LIN		H											
A2Ø dB	LOG	H												
	LIN	H												
SG1Ø	LOG				H		H		H	H	H	H	H	H
	LIN				H		H		H	H	H	H		
SG2Ø-1	LOG					H	H	H	H	H	H	H	H	H
	LIN					H	H	H	H	H	H	H		
SG2Ø-2	LOG							H	H	H	H	H	H	H
	LIN							H	H	H	H	H		
OS1Ø	LOG									H		H		H
	LIN													
OS2Ø-1	LOG										H	H	H	H
	LIN													
OS2Ø-2	LOG												H	H
	LIN													
LG1Ø	LOG													
	LIN									H		H		
LG2Ø	LOG													
	LIN										H	H		
INPUT ATTENUATION SETTING AT 0dB; SHIFT ATTENUATOR (FOR EXTENDED RANGES)														

11. BANDWIDTH CONTROL LINES (ALL VOLTAGES APPROXIMATE):

RES BW \ CONTROL LINKS	BW5	BW63	BW68	BW7	SWITCH	300 Hz	100 Hz	30Hz	10 Hz
3 MHz	+14.8V	-14V	-14V	+8.7V	+14.7V	<-10V	<-10V	<-10V	<-10V
1 MHz	+14.8V	-14V	-14V	+13.1V	+14.7V	<-10V	<-10V	<-10V	<-10V
300 KHz	+14.8V	-14V	-14V	+14.1V	+14.7V	<-10V	<-10V	<-10V	<-10V
100 KHz	+14.8V	-14V	-14V	+14.5V	+14.7V	<-10V	<-10V	<-10V	<-10V
30 KHz	-.6V	+14.3V	+14.3V	+14.3V	+14.7V	<-10V	<-10V	<-10V	<-10V
10 KHz	-.6V	+9.3V	+9.3V	+14.3V	+14.7V	<-10V	<-10V	<-10V	<-10V
3 KHz	-.6V	+9.0V	+9.0V	+14.3V	+14.7V	<-10V	<-10V	<-10V	<-10V
1 KHz	-.6V	+14.3V	+9.2V	+14.3V	0V	<-10V	<-10V	<-10V	<-10V
300 Hz	-.6V	+14.3V	+9.2V	+14.3V	0V	>4V	<-10V	<-10V	<-10V
100 Hz	-.6V	+14.3V	+9.2V	+14.3V	0V	<-10V	>-4V	<-10V	<-10V
30 Hz	-.6V	+14.3V	+9.2V	+14.3V	0V	<-10V	<-10V	>4V	<-10V
10 Hz	-.6V	+14.3V	+9.2V	+14.3V	0V	<-10V	<-10V	>4V	>4V

12. ADDRESS LINE TRUTH TABLE:

ADR4	ADR3	ADR2	ADR1	ADRØ	ADDRESS
H		H			ADDRESS 20
H		H		H	ADDRESS 21

13. LOG EXPAND TRUTH TABLE:

dB/DIV	B LOG	A LOG
10		
5		H
2	H	
1	H	H

SERIAL PREFIX: 2403A

FIGURE 4. A4A9 SCHEMATIC DIAGRAM (2 OF 2)

TABLE 1. A4A10, REPLACEABLE PARTS

Reference Designation	HP Part Number	C D	Qty	Description	Mfr Code	Mfr Part Number
A4A10	05562-60149	0	1	BOARD ASSEMBLY, IF-VIDEO MOTHERBOARD	28480	05562-60149
A4A10C1	0180-1746	5	2	CAPACITOR-FXD 15UF+-10% 20VDC TA	56289	150D156X9020B2
A4A10C2	0180-0229	7	1	CAPACITOR-FXD 33UF+-10% 10VDC TA	56289	150D336X9010B2
A4A10C3	0180-1746	5		CAPACITOR-FXD 15UF+-10% 20VDC TA	56289	150D156X9020B2
A4A10C4	0160-4833	5	13	CAPACITOR-FXD .022UF +-10% 100VDC CER	28480	0160-4833
A4A10C5	0160-4833	5		CAPACITOR-FXD .022UF +-10% 100VDC CER	28480	0160-4833
A4A10C6	0160-4833	5		CAPACITOR-FXD .022UF +-10% 100VDC CER	28480	0160-4833
A4A10C7	0160-4833	5		CAPACITOR-FXD .022UF +-10% 100VDC CER	28480	0160-4833
A4A10C8	0160-4833	5		CAPACITOR-FXD .022UF +-10% 100VDC CER	28480	0160-4833
A4A10C9	0160-4833	5		CAPACITOR-FXD .022UF +-10% 100VDC CER	28480	0160-4833
A4A10C10	0160-4833	5		CAPACITOR-FXD .022UF +-10% 100VDC CER	28480	0160-4833
A4A10C11	0160-4833	5		CAPACITOR-FXD .022UF +-10% 100VDC CER	28480	0160-4833
A4A10C12	0160-4833	5		CAPACITOR-FXD .022UF +-10% 100VDC CER	28480	0160-4833
A4A10C13	0160-4832	4	3	CAPACITOR-FXD .01UF +-10% 100VDC CER	28480	0160-4832
A4A10C14	0160-4833	5		CAPACITOR-FXD .022UF +-10% 100VDC CER	28480	0160-4833
A4A10C15	0160-4832	4		CAPACITOR-FXD .01UF +-10% 100VDC CER	28480	0160-4832
A4A10C16	0160-4833	5		CAPACITOR-FXD .022UF +-10% 100VDC CER	28480	0160-4833
A4A10C17	0160-4833	5		CAPACITOR-FXD .022UF +-10% 100VDC CER	28480	0160-4833
A4A10C18	0160-4833	5		CAPACITOR-FXD .022UF +-10% 100VDC CER	28480	0160-4833
A4A10C19	0160-4574	1	4	CAPACITOR-FXD 1000PF +-10% 100VDC CER	28480	0160-4574
A4A10C20	0160-4574	1		CAPACITOR-FXD 1000PF +-10% 100VDC CER	28480	0160-4574
A4A10C21	0160-4574	1		CAPACITOR-FXD 1000PF +-10% 100VDC CER	28480	0160-4574
A4A10C22	0160-4574	1		CAPACITOR-FXD 1000PF +-10% 100VDC CER	28480	0160-4574
A4A10C23	0160-4832	4		CAPACITOR-FXD .01UF +-10% 100VDC CER	28480	0160-4832
A4A10J1	1251-8432	2	1	CONN-POST TYPE .100-PIN-SPCG 50-CONT	28480	1251-8432
A4A10J2	1251-3276	2	1	CONNECTOR 6-PIN M POST TYPE	28480	1251-3276
A4A10L1	9100-1618	1	11	INDUCTOR RF-CH-MLD 5.6UH 10%	28480	9100-1618
A4A10L2	9100-1618	1		INDUCTOR RF-CH-MLD 5.6UH 10%	28480	9100-1618
A4A10L3	9100-1618	1		INDUCTOR RF-CH-MLD 5.6UH 10%	28480	9100-1618
A4A10L4	08558-80011	6	3	FILTER COIL BLUE	28480	08558-80011
A4A10L5	08558-80011	6		FILTER COIL BLUE	28480	08558-80011
A4A10L6	08558-80011	6		FILTER COIL BLUE	28480	08558-80011
A4A10L7	9100-1618	1		INDUCTOR RF-CH-MLD 5.6UH 10%	28480	9100-1618
A4A10L8	9100-1618	1		INDUCTOR RF-CH-MLD 5.6UH 10%	28480	9100-1618
A4A10L9	9100-1618	1		INDUCTOR RF-CH-MLD 5.6UH 10%	28480	9100-1618
A4A10L10	9100-1618	1		INDUCTOR RF-CH-MLD 5.6UH 10%	28480	9100-1618
A4A10L11	9100-1618	1		INDUCTOR RF-CH-MLD 5.6UH 10%	28480	9100-1618
A4A10L12	9100-1618	1		INDUCTOR RF-CH-MLD 5.6UH 10%	28480	9100-1618
A4A10L13	9100-1618	1		INDUCTOR RF-CH-MLD 5.6UH 10%	28480	9100-1618
A4A10L14	9100-1618	1		INDUCTOR RF-CH-MLD 5.6UH 10%	28480	9100-1618
A4A10R1	0757-0401	0	4	RESISTOR 100 1% .125W F TC=0+-100	24546	C4-1/8-T0-101-F
A4A10R2	0757-0401	0		RESISTOR 100 1% .125W F TC=0+-100	24546	C4-1/8-T0-101-F
A4A10R3	0757-0401	0		RESISTOR 100 1% .125W F TC=0+-100	24546	C4-1/8-T0-101-F
A4A10R4	0757-0401	0		RESISTOR 100 1% .125W F TC=0+-100	24546	C4-1/8-T0-101-F
A4A10A4XA1P1	1251-0472	4	15	CONNECTOR-PC EDGE 6-CONT/ROW 2-ROWS	28480	1251-0472
A4A10A4XA1P2	1251-0472	4		CONNECTOR-PC EDGE 6-CONT/ROW 2-ROWS	28480	1251-0472
A4A10A4XA2P1	1251-0472	4		CONNECTOR-PC EDGE 6-CONT/ROW 2-ROWS	28480	1251-0472
A4A10A4XA2P2	1251-0472	4		CONNECTOR-PC EDGE 6-CONT/ROW 2-ROWS	28480	1251-0472
A4A10A4XA3P1	1251-0472	4		CONNECTOR-PC EDGE 6-CONT/ROW 2-ROWS	28480	1251-0472
A4A10A4XA3P2	1251-0472	4		CONNECTOR-PC EDGE 6-CONT/ROW 2-ROWS	28480	1251-0472
A4A10A4XA4P1	1251-0472	4		CONNECTOR-PC EDGE 6-CONT/ROW 2-ROWS	28480	1251-0472
A4A10A4XA4P2	1251-0472	4		CONNECTOR-PC EDGE 6-CONT/ROW 2-ROWS	28480	1251-0472
A4A10A4XA5P1	1251-0472	4		CONNECTOR-PC EDGE 6-CONT/ROW 2-ROWS	28480	1251-0472
A4A10A4XA5P2	1251-2034	8	1	CONNECTOR-PC EDGE 10-CONT/ROW 2-ROWS	28480	1251-2034
A4A10A4XA6A1P1	1251-0472	4		CONNECTOR-PC EDGE 6-CONT/ROW 2-ROWS	28480	1251-0472
A4A10A4XA6A2P1	1251-0472	4		CONNECTOR-PC EDGE 6-CONT/ROW 2-ROWS	28480	1251-0472
A4A10A4XA7P1	1251-0472	4		CONNECTOR-PC EDGE 6-CONT/ROW 2-ROWS	28480	1251-0472
A4A10A4XA7P2	1251-0472	4		CONNECTOR-PC EDGE 6-CONT/ROW 2-ROWS	28480	1251-0472
A4A10A4XA8P1	1251-0472	4		CONNECTOR-PC EDGE 6-CONT/ROW 2-ROWS	28480	1251-0472
A4A10A4XA8P2	1251-0472	4		CONNECTOR-PC EDGE 6-CONT/ROW 2-ROWS	28480	1251-0472
A4A10A4XA9P1	1251-2026	8	2	CONNECTOR-PC EDGE 18-CONT/ROW 2-ROWS	28480	1251-2026
A4A10A4XA9P2	1251-2026	8		CONNECTOR-PC EDGE 18-CONT/ROW 2-ROWS	28480	1251-2026

A4A10
IF-VIDEO MOTHERBOARD

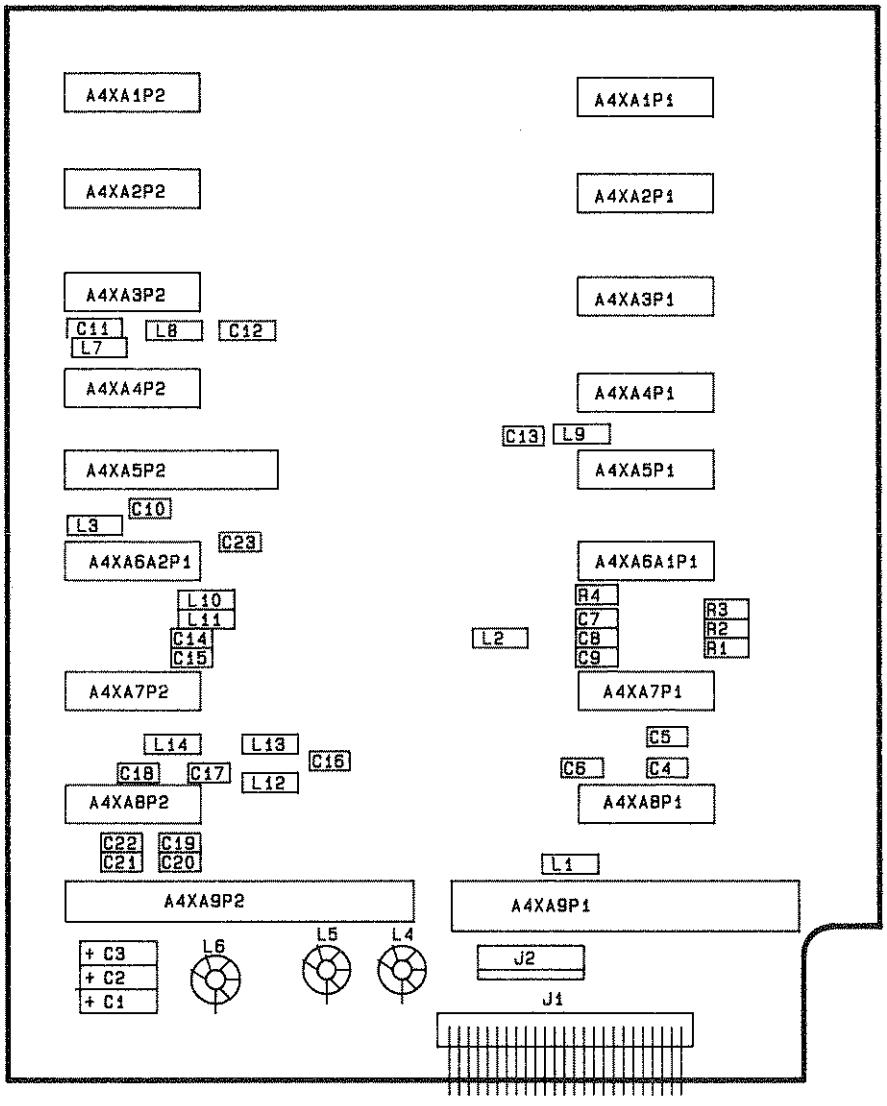

FIGURE 1. A4A10 IF-VIDEO MOTHERBOARD, COMPONENT LOCATIONS

A4A10 IF-VIDEO MOTHERBOARD
85662-60149

J1 50-WIRE INSTRUMENT BUS

PIN	SIGNAL
1	GND
2	NC
3	IOB0
4	IOB1
5	IOB2
6	IOB3
7	IOB4
8	IOB5
9	IOB6
10	IOB7
11	IOB8
12	IOB9
13	IOB10
14	IOB11
15	IOB12
16	IOB13
17	IOB14
18	IOB15
19	NC
20	NC
21	NC
22	HPON (NC)
23	ADR0
24	ADR1
25	ADR2
26	ADR3
27	ADR4
28	ADR5 (NOT USED)
29	NC
30	NC
31	KR0 (NC)
32	KR8 (NC)
33	KR10 (NC)
34	KR11 (NC)
35	KC0 (NC)
36	KC1 (NC)
37	KC2 (NC)
38	KC3 (NC)
39	KC4 (NC)
40	KC5 (NC)
41	KC6 (NC)
42	KC7 (NC)
43	LSTP (NC)
44	HSWP (NC)
45	LSRQ (NC)
46	LDSR (NC)
47	LBIO (NC)
48	GND
49	LTIO
50	GND

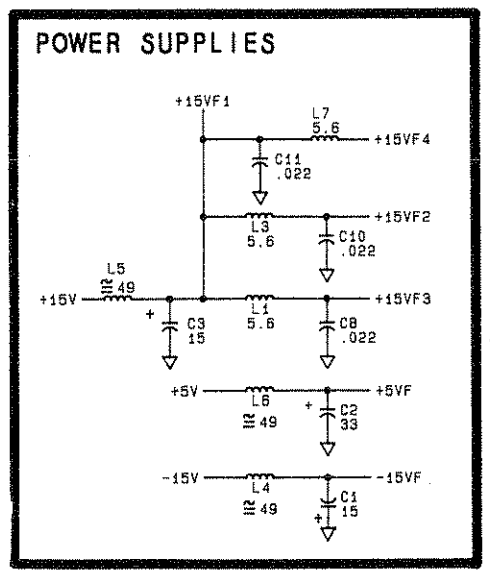

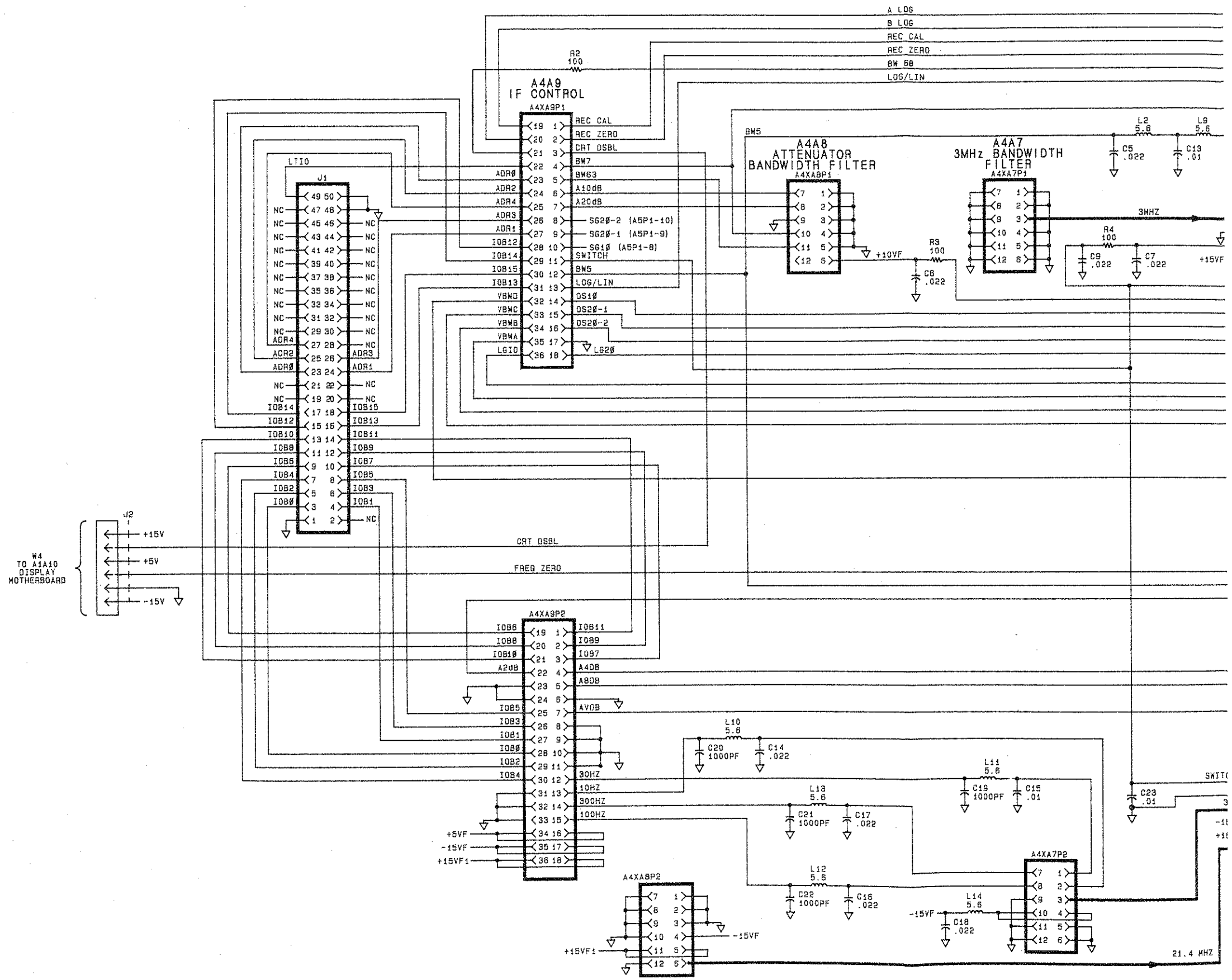

SERIAL PREFIX: 2403A

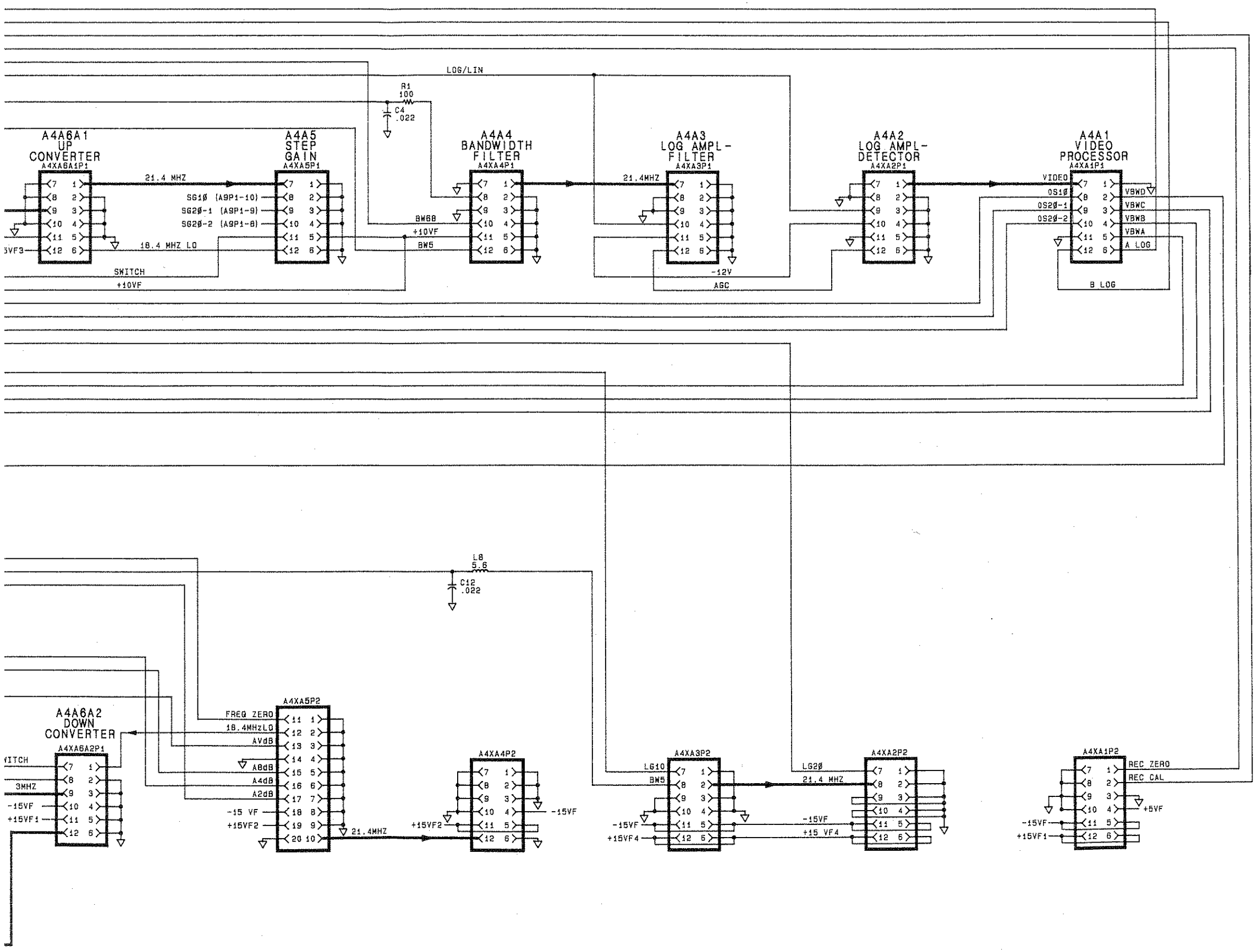

NOTES:

1. REFERENCE DESIGNATORS WITHIN THIS ASSEMBLY ARE ABBREVIATED. FOR COMPLETE REFERENCE DESIGNATION, PREFIX ABBREVIATION WITH ASSEMBLY DESIGNATION.
2. UNLESS OTHERWISE INDICATED:
   RESISTANCE IS IN OHMS (Ω)
   CAPACITANCE IS IN MICROFARADS (μF)
   INDUCTANCE IS IN MICROHENRIES (μH)
3. MNEMONIC TABLE:

MNEMONIC	DESCRIPTION
SG1Ø SG2Ø-1 SG2Ø-2	STEP GAIN CONTROLS
OS1Ø OS2Ø-1 OS2Ø-2	OFFSET GAIN CONTROLS
LG1Ø LG2Ø	LINEAR GAIN CONTROLS
VBWA VBWB VBWC VBWD	VIDEO BANDWIDTH CONTROLS
RBWA RBWB RBWC RBWD	RESOLUTION BANDWIDTH CONTROLS
VIDEO	VIDEO SIGNAL
SWITCH	UP/DOWN CONVERTER
18.4MHz LO	LOCAL OSC SIGNAL
21.4MHz	21.4MHz IF SIGNAL
3MHz	3MHz IF SIGNAL
BW5 BW7 BW63 BW68	BANDWIDTH CONTROL
FREQ ZERO	FREQ ZERO CONTROL
CRT DSBL	CRT DISABLE CONTROL
REC CAL	RECORDER CALIBRATION
REC ZERO	RECORDER ZERO
A LOG B LOG	LOG EXPAND CONTROL
LOG/LIN	LOG/LINEAR CONTROL
A2dB A4dB A8dB A10dB A20dB AVdB	ATTENUATION CONTROLS
I0B0-I0B15	INSTRUMENT BUS DATA BITS 0-15
ADR0-ADR4	INSTRUMENT BUS ADDRESS BITS
LTIO	LOW=DISPLAY SECTION I/O STROBE

4. UNLESS OTHERWISE INDICATED:
   SIGNALS ENTER AT LEFT SIDE AND EXIT AT RIGHT SIDE OF FUNCTION BLOCKS.

A4A10

FIGURE 2. A4A10 IF-VIDEO MOTHERBOARD, INTERCONNECT DIAGRAM

GENERAL PARTS LISTING

INTRODUCTION

The replaceable parts list breakdown for each major assembly is located following the circuit description for the assembly. This section contains information for ordering the replacement parts not listed in the major assembly tabs. Table 1 includes a list of reference designations and a list of abbreviations used in the parts list. Table 2 lists names and addresses that correspond to the manufacturer code numbers in the parts list.

REPLACEABLE PARTS LIST

The following information is listed for each part:

1. The Hewlett-Packard part number.
2. The part number check digit (CD).
3. The total quantity (Qty) in the instrument. This quantity is given only once, at the first appearance of the part in the list.
4. The description of the part.
5. A five-digit code indicating a typical manufacturer of the part.
6. The manufacturer's part number.

ORDERING INFORMATION

To order a part listed in the replaceable parts table, quote the Hewlett-Packard part number (with check digit), indicate the quantity required, and address the order to the nearest Hewlett-Packard office. The check digit will ensure accurate and timely processing of your order.

To order a part that is not listed in the replaceable parts table, include the instrument model number, instrument serial number, the description and function of the part, and the number of parts required. Address the order to the nearest Hewlett-Packard office.

TABLE 1. REFERENCE DESIGNATIONS AND ABBREVIATIONS (1 OF 3)

REFERENCE DESIGNATIONS

A ..... Assembly
AT ..... Attenuator, Isolator, Limiter, Termination
B ..... Fan, Motor
BT ..... Battery
C ..... Capacitor
CP ..... Coupler
CR ..... Diode, Diode Thyristor, Step Recovery Diode, Varactor
DC ..... Directional Coupler
DL ..... Delay Line
DS ..... Annunciator, Lamp, Light Emitting Diode (LED), Signaling Device (Visible)
E ..... Miscellaneous Electrical Part
F ..... Fuse
FL ..... Filter
HY ..... Circulator
J ..... Electrical Connector (Stationary Portion), Jack
K ..... Relay
L ..... Coil, Inductor
M ..... Meter
MP ..... Miscellaneous Mechanical Part
P ..... Electrical Connector (Movable Portion), Plug
Q ..... Silicon Controlled Rectifier (SCR), Transistor, Triode Thyristor
R ..... Resistor
RT ..... Thermistor
S ..... Switch
T ..... Transformer
TB ..... Terminal Board
TC ..... Thermocouple
TP ..... Test Point
U ..... Integrated Circuit, Microcircuit
V ..... Electron Tube
VR ..... Breakdown Diode (Zener), Voltage Regulator
W ..... Cable, Wire, Jumper
X ..... Socket
Y ..... Crystal Unit (Piezoelectric, Quartz)
Z ..... Tuned Cavity, Tuned Circuit

ABBREVIATIONS

A

A ..... Across Flats, Acrylic, Air (Dry Method), Ampere
ADJ ..... Adjust, Adjustment
ANSI ..... American National Standards Institute (formerly USASI-ASA)
ASSY ..... Assembly
AWG ..... American Wire Gage

B

BCD ..... Binary Coded Decimal
BD ..... Board, Bundle
BE-CU ..... Beryllium Copper
BNC ..... Type of Connector
BRG ..... Bearing, Boring
BRS ..... Brass
BSC ..... Basic
BTN ..... Button

C

C ..... Capacitance, Capacitor, Center Tapped, Cermet, Cold, Compression
CCP ..... Carbon Composition Plastic
CD ..... Cadmium, Card, Cord
CER ..... Ceramic
CHAM ..... Chamfer
CHAR ..... Character, Characteristic, Charcoal
CMOS ..... Complementary Metal Oxide Semiconductor
CNDCT ..... Conducting, Conductive, Conductivity, Conductor
CONT ..... Contact, Continuous, Control, Controller
CONV ..... Converter
CPRSN ..... Compression
CUP-PT ..... Cup Point
CW ..... Clockwise, Continuous Wave

D

D ..... Deep, Depletion, Depth, Diameter, Direct Current
DA ..... Darlington
DAP-GL ..... Diallyl Phthalate Glass
DBL ..... Double
DCDR ..... Decoder
DEG ..... Degree
D-HOLE ..... D-Shaped Hole
DIA ..... Diameter
DIP ..... Dual In-Line Package
DIP-SLDR ..... Dip Solder
D-MODE ..... Depletion Mode
DO ..... Package Type Designation
DP ..... Deep, Depth, Diametric Pitch, Dip
DP3T ..... Double Pole Three Throw
DPDT ..... Double Pole Double Throw
DWL ..... Dowel

E

E-R ..... E-Ring
EXT ..... Extended, Extension, External, Extinguish

F

F ..... Fahrenheit, Farad, Female, Film (Resistor), Fixed, Flange, Frequency
FC ..... Carbon Film/Composition, Edge of Cutoff Frequency, Face
FDTHRU ..... Feed Through
FEM ..... Female
FIL-HD ..... Fillister Head
FL ..... Flash, Flat, Fluid
FLAT-PT ..... Flat Point
FR ..... Front
FREQ ..... Frequency
FT ..... Current Gain Bandwidth Product (Transition Frequency), Feet, Foot
FXD ..... Fixed

G

GEN ..... General, Generator
GND ..... Ground
GP ..... General Purpose, Group

H

H ..... Henry, High
HDW ..... Hardware
HEX ..... Hexadecimal, Hexagon, Hexagonal
HLCL ..... Helical
HP ..... Hewlett-Packard Company, High Pass

I

IC ..... Collector Current, Integrated Circuit
ID ..... Identification, Inside Diameter
IF ..... Forward Current, Intermediate Frequency
IN ..... Inch
INCL ..... Including
INT ..... Integral, Intensity, Internal

TABLE 1. REFERENCE DESIGNATIONS AND ABBREVIATIONS (2 OF 3)

J

J-FET ..... Junction Field Effect Transistor
JFET ..... Junction Field Effect Transistor

K

K ..... Kelvin, Key, Kilo, Potassium
KNRLD ..... Knurled
KVDC ..... Kilovolts Direct Current

L

LED ..... Light Emitting Diode
LG ..... Length, Long
LIN ..... Linear, Linearity
LK ..... Link, Lock
LKG ..... Leakage, Locking
LUM ..... Luminous

M

M ..... Male, Maximum, Mega, Mil, Milli, Mode
MA ..... Milliampere
MACH ..... Machined
MAX ..... Maximum
MC ..... Molded Carbon Composition
MET ..... Metal, Metallized
MHZ ..... Megahertz
MINTR ..... Miniature
MIT ..... Miter
MLD ..... Mold, Molded
MM ..... Magnetized Material, Millimeter
MOM ..... Momentary
MTG ..... Mounting
MTLC ..... Metallic
MW ..... Milliwatt

N

N ..... Nano, None
N-CHAN ..... N-Channel
NH ..... Nanohenry
NM ..... Nanometer, Nonmetallic
NO ..... Normally Open, Number
NOM ..... Nominal
NPN ..... Negative Positive Negative (Transistor)
NS ..... Nanosecond, Non-Shorting, Nose
NUM ..... Numeric
NYL ..... Nylon (Polyamide)

O

OA ..... Over-All
OD ..... Outside Diameter
OP AMP ..... Operational Amplifier
OPT ..... Optical, Option, Optional

P

PA ..... Picoampere, Power Amplifier
PAN-HD ..... Pan Head
PAR ..... Parallel, Parity
PB ..... Lead (Metal), Pushbutton
PC ..... Printed Circuit
PCB ..... Printed Circuit Board
P-CHAN ..... P-Channel
PD ..... Pad, Power Dissipation
PF ..... Picofarad, Power Factor
PKG ..... Package
PLSTC ..... Plastic
PNL ..... Panel
PNP ..... Positive Negative Positive (Transistor)
POLYC ..... Polycarbonate
POLYE ..... Polyester
POT ..... Potentiometer
POZI ..... Pozidriv Recess
PREC ..... Precision
PRP ..... Purple, Purpose
PSTN ..... Piston
PT ..... Part, Point, Pulse Time
PW ..... Pulse Width

Q

Q ..... Figure of Merit

R

R ..... Range, Red, Resistance, Resistor, Right, Ring
REF ..... Reference
RES ..... Resistance, Resistor
RF ..... Radio Frequency
RGD ..... Rigid
RND ..... Round
RR ..... Rear
RVT ..... Rivet, Riveted

S

SAWR ..... Surface Acoustic Wave Resonator
SEG ..... Segment
SGL ..... Single
SI ..... Silicon, Square Inch
SL ..... Slide, Slow
SLT ..... Slot, Slotted
SMA ..... Subminiature, A Type (Threaded Connector)
SMB ..... Subminiature, B Type (Slip-On Connector
SMC ..... Subminiature, C Type (Threaded Connector)
SPCG ..... Spacing
SPDT ..... Single Pole Double Throw
SPST ..... Single Pole Single Throw
SQ ..... Square
SST ..... Stainless Steel
STL ..... Steel
SUBMIN ..... Subminiature
SZ ..... Size

T

T ..... Teeth, Temperature, Thickness, Time, Timed, Tooth, Typical
TA ..... Ambient Temperature, Tantalum
TC ..... Temperature Coefficient
THD ..... Thread, Threaded
THK ..... Thick
TO ..... Package Type Designation
TPG ..... Tapping
TR-HD ..... Truss Head
TRMR ..... Trimmer
TRN ..... Turn, Turns
TRSN ..... Torsion

U

UCD ..... Microcandela
UF ..... Microfarad
UH ..... Microhenry
UL ..... Microliter, Underwriters' Laboratories, Inc.
UNHDND ..... Unhardened

V

V ..... Variable, Violet, Volt, Voltage
VAC ..... Vacuum, Volts, Alternating Current
VAR ..... Variable
VDC ..... Volts, Direct Current

W

W ..... Watt, Wattage, White, Wide, Width
W/SW ..... With Switch
WW ..... Wire Wound

X

X ..... By (Used With Dimensions), Reactance

Y

YIG ..... Yttrium-Iron-Garnet

Z

ZNR ..... Zener

TABLE 1. REFERENCE DESIGNATIONS AND ABBREVIATIONS (3 OF 3)

MULTIPLIERS					
Abbreviation	**Prefix**	**Multiple**	**Abbreviation**	**Prefix**	**Multiple**
T	tera	10^{12}	m	milli	10^{-3}
G	giga	10^{9}	μ	micro	10^{-6}
M	mega	10^{6}	n	nano	10^{-9}
k	kilo	10^{3}	p	pico	10^{-12}
da	deka	10	f	femto	10^{-15}
d	deci	10^{-1}	a	atto	10^{-18}
c	centi	10^{-2}			

TABLE 2. MANUFACTURERS CODE LIST

Mfr. No.	Manufacturer Name	Address	Zip Code
S4013	HITACHI	TOKYO, JP	
00000	ANY SATISFACTORY SUPPLIER		
00471	DOW-KEY CO INC	BROOMFIELD, WY	80020
00853	SANGAMO ELEC CO S CAROLINA DIV	PICKENS, SC	29671
01121	ALLEN-BRADLEY CO	MILWAUKEE, WI	53204
01281	TRW INC SEMICONDUCTOR DIV	LAWNDALE, CA	90260
01295	TEXAS INSTR INC SEMICOND CMPNT DIV	DALLAS, TX	75222
02111	SPECTROL ELECTRONICS CORP	CITY OF IND, CA	91745
02660	BUNKER RAMO CORP AMPHENOL CONN DIV	BROADVILLE, IL	60153
03888	K D I PYROFILM CORP	WHIPPANY, NJ	07981
04713	MOTOROLA SEMICONDUCTOR PRODUCTS	PHOENIX, AZ	85008
06001	MEPCO ELECTRA CORP	COLUMBIA, SC	29063
06665	PRECISION MONOLITHICS INC	SANTA CLARA, CA	95050
18324	SIGNETICS CORP	SUNNYVALE, CA	94086
19701	MEPCO/ELECTRA CORP	MINERAL WELLS, TX	76067
24355	ANALOG DEVICES INC	NORWOOD, MA	02062
24546	CORNING GLASS WORKS	BRADFORD, PA	16701
27014	NATIONAL SEMICONDUCTOR CORP	SANTA CLARA, CA	95051
28480	HEWLETT-PACKARD CO CORPORATE HQ	PALO ALTO, CA	94304
29832	TELEDYNE PHILBRICK NEXUS	DEDHAM, MA	02026
3L585	RCA CORP SOLID STATE DIV	SOMERVILLE, NJ	
30161	AAVID ENGINEERING INC	LACONIA, NH	03246
34335	ADVANCED MICRO DEVICES INC	SUNNYVALE, CA	94086
52763	STETTNER ELECTRONICS INC	CHATTANOOGA, TN	13035
55576	SYNERTEK	SANTA CLARA, CA	95051
56289	SPRAGUE ELECTRIC CO	NORTH ADAMS, MA	01247
72136	ELECTRO MOTIVE CORP	FLORENCE, SC	06226
72982	ERIE TECHNOLOGICAL PRODUCTS INC	ERIE, PA	16512
73138	BECKMAN INSTRUMENTS INC HELIPOT DIV	FULLERTON, CA	92634
74970	JOHNSON E F CO	WASECA, MN	56093
75042	TRW INC PHILADELPHIA DIV	PHILADELPHIA, PA	19108
75915	LITTELFUSE INC	DES PLAINES, IL	60016
91506	AUGAT INC	ATTLEBORO, MA	02703

TABLE 3. AC POWER CABLES AVAILABLE

Plug Type**	Cable HP Part Number	Plug Description	Cable Length cm (inches)	Cable Color	For Use In Country
250V 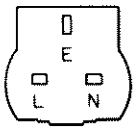	8120-1351 8120-1703	Straight*BS1363A 90°	229 (90) 229 (90)	Mint Gray Mint Gray	Great Britain, Cyprus, Nigeria, Rhodesia, Singapore, So. Africa, India
250V 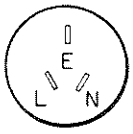	8120-1369 8120-0696	Straight*NZSS198/ASC112 90°	201 (79) 221 (87)	Gray Gray	Australia, New Zealand
250V 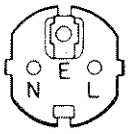	8120-1689 8120-1692	Straight*CEE7-Y11 90°	201 (79) 201 (79)	Mint Gray Mint Gray	East and West Europe, Saudi Arabia, United Arab Republic (unpolarized in many nations)
125V	8120-1348 8120-1398 8120-1754	Straight*NEMA5-15P 90° Straight*NEMA5-15P	203 (80) 203 (80) 91 (36)	Black Black Black	United States Canada, Japan (100 or 200V), Mexico, Phillipines, Taiwan
	8120-1378 8120-1521 8120-1676	Straight*NEMA5-15P 90° Straight*NEMA5-15P	203 (80) 203 (80) 91 (36)	Jade Gray Jade Gray Jade Gray	
250V 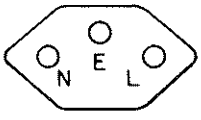	8120-2104	Straight*SEV1011 1959-24507 Type 12	201 (79)	Gray	Switzerland
220V 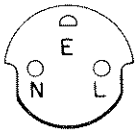	8120-0698	Straight*NEMA6-15P			
250V 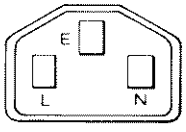	8120-1860	Straight*CEEE22-VI			

* Part number shown for plug is industry identifier for plug only. Number shown for cable is HP Part Number for complete cable, including plug.

** E = Earth Ground; L = Line; N = Neutral.

TABLE 4. IF-DISPLAY SECTION, MISCELLANEOUS PARTS

Reference Designator	HP Part Number	C D	Qty	Description	Mfr. Code	Mfr. Part Number
A1T1	9100-4009	0	1	TRANSFORMER	28480	9100-4009
A1V1	5083-5791	7	1	CRT-P31 PHOSPER COATING	28480	5083-5791
A1V1MP1	4320-0311	0	1	SHOCK MOUNT CRT	28480	4320-0311
A1V1MP2	0905-0573	2	1	GASKET, CRT REAR	28480	0905-0573
A1V1MP3	01332-66001	8	1	TRACE ALIGN COIL	28480	01332-66001
A1V1MP4	01701-66001	5	1	ORTHO COIL	28480	01701-66001
A1V1MP5	8500-2163	7	5	THIN-FILM CLEANER FOR CLEANING EMI CRT SHIELD	28480	8500-2163
A1A1	85662-60001	1	1	KEYBOARD ASSEMBLY	28480	85662-60001
A1A1 (restored)	85662-60129	4	1	RESTORED KEYBOARD ASSEMBLY	28480	85662-60129
A1A2	85662-60100	1	1	Z-AXIS AMPLIFIER BOARD ASSY	28480	85662-60100
A1A3	85662-60059	9	1	HIGH VOLTAGE REGULATOR BOARD ASSY	28480	85662-60059
A1A4	85662-60057	7	1	X-DEFLECTION AMPLIFIER BOARD ASSY	28480	85662-60059
A1A5	85662-60057	7	1	Y-DEFLECTION AMPLIFIER BOARD ASSY	28480	85662-60057
A1A6	85662-60101	2	1	+ / – 15V REGULATOR BOARD ASSY	28480	85662-60101
A1A7	85662-60052	2	1	+ 100V + 5.2V REGULATOR BOARD ASSY	28480	85662-60052
A1A8	85662-60133	0	1	RECTIFIER BOARD ASSY	28480	85662-60133
A1A9	85662-60056	6	1	BUS TRANSITION BOARD ASSY	28480	85662-60056
A1A10	85662-60050	0	1	DISPLAY MOTHERBOARD ASSY	28480	85662-60050
A1A11	0960-0383	8	1	HV MULTIPLIER	28480	0960-0383
A3A1	85662-60014	6	1	TRIGGER BOARD ASSY	28480	85662-60014
A3A2	85662-60025	9	1	INTENSITY CONTROL BOARD ASSY	28480	85662-60025
A3A3	85662-60128	3	1	LINE GENERATOR BOARD ASSY	28480	85662-60128
A3A4	85662-60125	0	1	MEMORY BOARD ASSY	28480	85662-60125
A3A5	85662-60145	9	1	DATA MANIPULATOR BOARD ASSY	28480	85662-60145
A3A6	85662-60146	5	1	MAIN CONTROL BOARD ASSY	28480	85662-60146
A3A7	85662-60127	7	1	INTERFACE BOARD ASSY	28480	85662-60127
A3A8	85662-60130	7	1	ANALOG-DIGITAL CONVERTER BOARD ASSY	28480	85662-60130
A3A9	85662-60151	2	1	TRACK/HOLD BOARD ASSY	28480	85662-60151
A3A10	85662-60015	7	1	DIGITAL STORAGE MOTHERBOARD ASSY	28480	85662-60015
A4A1	85662-60122	7	1	VIDEO PROCESSOR BOARD ASSY	28480	85662-60122
A4A2/A4A3	85662-60096	4	1	LOG AMPLIFIER (INCLUDES A4A2 AND A4A3)	28480	85662-60096
A4A2/A4A3	85662-60097	5	1	RESTORED 85662-60097	28480	85662-60097
A4A2	85662-60132	9	1	LOG AMPLIFIER-DETECTOR BOARD ASSY	28480	85662-60132
A4A3	85662-60009	9	1	LOG AMPLIFIER BOARD ASSY	28480	85662-60009
A4A4	85662-60142	1	1	BANDWIDTH FILTER BOARD ASSY	28480	85662-60142
A4A5	85662-60139	6	1	STEP GAIN BOARD ASSY	28480	85662-60139
A4A6	85662-60018	0	1	DOWN/UP CONVERTER ASSY	28480	85662-60018
A4A6A1	85662-60006	6	1	UP CONVERTER BOARD ASSY	28480	85662-60006
A4A6A2	85662-60005	5	1	DOWN CONVERTER BOARD ASSY	28480	85662-60005
A4A7	85662-60004	4	1	3 MHZ BW FILTER BOARD ASSY	28480	85662-60004
A4A8	85662-60131	8	1	ATTENUATOR BANDWIDTH FLT BOARD ASSY	28480	85662-60131
A4A9	85662-60147	6	1	IF CONTROL BOARD ASSY	28480	85662-60147
A4A10	85662-60149	8	1	IF-VIDEO MOTHERBOARD ASSY	!28480	85662-60149
B1	3160-0298	1	1	FAN-SKL 72-CFM 115V 50/60/400-HZ 1.5-THK (OPTION 400 ONLY)	28480	3160-0298
B1	3160-0296	9	1	FAN-SKL 72-CFM 115V 50/60-HZ 1.5-THK	28480	3160-0296
C1	0160-4065	5	1	CAPACITOR-FXD .1UF ± 20% 250VAC (RMS)	28480	0160-4065
C2	0160-2636	2	2	CAPACITOR-FXD 470PF ± 20% 3KVDC CER	28480	0160-2636
C3	0160-2636	2	1	CAPACITOR-FXD 470PF ± 20% 3KVDC CER	28480	0160-2636
F1	2110-0007	4	1	FUSE A1 250V SLO-BLO 1.25X.25 UL IEC	75915	313001
F1	2110-0006	3	1	FUSE 2A 250V SLO-BLO 1.25X.25 UL	71400	MDX-2
FL1	0960-0448	6	1	LINE MODULE FILTER	05245	F1927
FL1TB1			1	PART OF FL1 & NOT SEPARATELY REPLACEABLE		
J1	1251-7498	8	1	CONNECTOR 5-PIN F D SERIES	28480	1251-7498
J2				(SEE A1A9J2)		
J3				PART OF W28		
J4				PART OF W29		
J5				PART OF W27		
J6				PART OF W32		
J7				PART OF W14		
J8				PART OF W13		
J9				PART OF W25		
J10				PART OF W26		
J11				PART OF W15		
J12				PART OF W34		
J13				PART OF W33		
J14				PART OF W35		
J15				PART OF W36		
T1				SEE A1T1		
TB1	85662-60086	2	1	TERMINAL BOARD, PC 400HZ CAP (OPT 400)	28480	85662-60086
TB1	0170-0073	8	1	CAPACITOR-FXD 1UF ± 10% 600VDC POLYE	28480	0170-0073
V1			1	SEE A1V1		
W1	85662-60068	0	2	CABLE ASSEMBLY, A1A1 TO A1A10 (RIBBON CABLE, P/O A3 INTERCONNECT	28480	85662-60068
W2	85662-60068	0	1	CABLE ASSEMBLY, A1A1 TO A1A10 (RIBBON CABLE, P/O A3 INTERCONNECT)	28480	85662-60068
W3	85662-60062	4	1	CABLE ASSEMBLY, A1A10 TO A3A10 (A3 POWER)	28480	85662-60062
W4	85662-60063	5	1	CABLE ASSEMBLY, A1A10 TO A4A10	28480	85662-60063
W5	85662-60073	7	1	CABLE ASSEMBLY, A1A10 TO A1A9	28480	85662-60073

TABLE 4. IF-DISPLAY SECTION, MISCELLANEOUS PARTS

Reference Designator	HP Part Number	C D	Qty	Description	Mfr. Code	Mfr. Part Number
W6	85662-60064	6	1	CABLE ASSEMBLY, A1A4 TO A1V1 (X-DEFL)	28480	85662-60064
W7	85662-60064	6	1	CABLE ASSEMBLY, A1A5 TO A1V1 (Y-DEFL)	28480	85662-60064
W8	85662-60028	2	1	CABLE ASSEMBLY, (INST. BUS)	28480	85662-60028
W9	85662-60066	8	1	CABLE ASSEMBLY, A1A10 TO A3A10 (RIBBON CABLE)	28480	85662-60066
W10				NOT ASSIGNED		
W11	85662-60043	1	2	CABLE ASSEMBLY, COAX 9, A3A9 TO A3A2 (VIDEO)	28480	85662-60043
W12				NOT ASSIGNED		
W13	85662-60103	4	1	CABLE ASSEMBLY, COAX 1, A4A1 TO REAR PANEL J8 (RECORDER VIDEO)	28480	85662-60103
W14	85662-60102	3	1	CABLE ASSEMBLY, COAX 3, A4A1 TO REAR PANEL J7 (RECORDER SWEEP)	28480	85662-60102
W15	85662-60104	5	1	CABLE ASSEMBLY, COAX 2, A4A2 TO REAR PANEL J11 (21.4MHZ IF OUTPUT)	28480	85662-60104
W16	85662-60032	8	1	CABLE ASSEMBLY, COAX 0, REAR	28480	85662-60032
W17	85662-60033	9	1	CABLE ASSEMBLY, COAX 93, REAR PANEL J1 TO A4A1 (AUX SWEEP INPUT)	28480	85662-60033
W18	85662-60031	7	1	CABLE ASSEMBLY, COAX 6, A4A2 TO REAR PANEL J1 (COUNTER OUTPUTS)	28480	85662-60031
W19	85662-60030	6	1	CABLE ASSEMBLY, COAX 97, REAR PANEL A1 TO A4A8 (21.4MHZ IF INPUT)	28480	85662-60030
W20				NOT ASSIGNED		
W21	85662-60070	4	1	CABLE ASSEMBLY, A1A3 TO A1V1 (CRT REAR CONNECTOR)	28480	85662-60070
W22				NOT ASSIGNED		
W23	85662-60029	3	1	CABLE ASSEMBLY, COAX 1, A3A10 TO A1A10 (X-DEFLECTION)	28480	85662-60029
W24	85662-60039	5	1	CABLE ASSEMBLY, COAX 1, A3A10 TO A1A10 (Y-DEFLECTION)	28480	85662-60039
W25	85662-60037	3	1	CABLE ASSEMBLY, COAX 84, A1A10 TO REAR PANEL J9 (PENLIFT)	28480	85662-60037
W26	85662-60038	4	1	CABLE ASSEMBLY, COAX 85, A1A10 TO REAR PANEL J10 (EXTERNAL TRIGGER)	28480	85662-60038
W27	85662-60036	2	1	CABLE ASSEMBLY, COAX 82, A1A10 TO REAR PANEL J5 (DISPLAY OUTPUT Z)	28480	85662-60036
W28	85662-60034	0	1	CABLE ASSEMBLY, COAX 83, A1A10 TO REAR PANEL J3 (DISPLAY OUTPUT X)	28480	85662-60034
W29	85662-60035	1	1	CABLE ASSEMBLY, COAX 81, A1A10 TO REAR PANEL J4 (DISPLAY OUTPUT Y)	28480	85662-60035
W30	85662-60093	1	1	CABLE ASSEMBLY, IF-DISPLAY SECTION TO RF SECTION (COAX INTERCONNECT)	28480	85662-60093
W31	85662-60094	2	1	CABLE ASSEMBLY, IF-DISPLAY SECTION TO RF SECTION (INST. BUS INTERCONNECT)	28480	85662-60094
W32	85662-60044	2	1	CABLE ASSEMBLY, COAX 86, A1A10 TO REAR PANEL J6 (DISPLAY OUTPUT BLANK)	28480	85662-60044
W33	85662-60118	1	1	CABLE ASSEMBLY, COAX 89, A4A6 TO REAR PANEL J13 (IF IN)	28480	85662-60118
W34	85662-60119	2	1	CABLE ASSEMBLY, COAX 87, A4A6 TO REAR PANEL J12 (IF OUT)	28480	85662-60119
W35	85662-60120	5	1	CABLE ASSEMBLY, COAX 7, A4A1 TO REAR PANEL J14 (VIDEO OUT)	28480	85662-60120
W36	85662-60121	6	1	CABLE ASSEMBLY, COAX 96, A3A9 TO REAR PANEL J15 (VIDEO IN)	28480	85662-60121
W37	85662-60117	0	2	CABLE ASSEMBLY, COAX 8, IF OUT TO IF IN	28480	85662-60117
W38	85662-60117	0	1	CABLE ASSEMBLY, COAX 8, VIDEO OUT TO VIDEO IN	28480	85662-60117

Item	HP Part Number	C D	Description	Mfr. Code	Mfr. Part Number
1	85662-00054	8	Panel, Front Dress	28480	85662-00054
2	0370-1005	2	Knob, Base Ptr.	28480	0370-1005
3	5020-8803	6	Frame, Front	28480	5020-8803
4	85662-20064	2	Bezel, Mainframe	28480	85662-20064
5	85680-00047	1	Painted Cover	28480	85680-00047
6	5020-8939	9	Lock Foot, Lower Left	28480	5020-8939
7	5020-8937	7	Lock Foot, Lower Right	28480	5020-8937
8	5040-7221	2	Foot, Upper Right/Left	28480	5040-7221
9	86701-00007	7	Guard Fan	28480	86701-00007
10	0570-1171	7	Screw, Cover MTG 6-32 .460-IN-LG	28480	0570-1171
11	0510-0043	4	Retainer Ring For Screw (10)	28480	0510-0043
12	2360-0219	9	Screw, 6-32, 1.375-IN-LG PAN HD	28480	2360-0219
13	2190-0018	5	Washer, LK	28480	2190-0018
14	2200-0103	2	Screw, 4-40, .25-IN-LG PAN HD	28480	2200-0103
15	2510-0136	8	Screw, 8-32, 2.5-IN-LG PAN HD	28480	2510-0136
A1T1			See Table 4 of this Tab		
FL1			See Table 4		
F1			See Table 4		
J1			See Table 4		
J2			See Table 4		
J3			See Table 4		
J4			See Table 4		
J5			See Table 4		
J6			See Table 4		
J7			See Table 4		
J8			See Table 4		
J9			See Table 4		
J10			See Table 4		
J11			See Table 4		
J12			See Table 4		
J13			See Table 4		
J14			See Table 4		
J15			See Table 4		
W30			See Table 4		
W31			See Table 4		

FIGURE 1. IF-DISPLAY SECTION PARTS IDENTIFICATION, FRONT/BACK VIEW (1 OF 2)

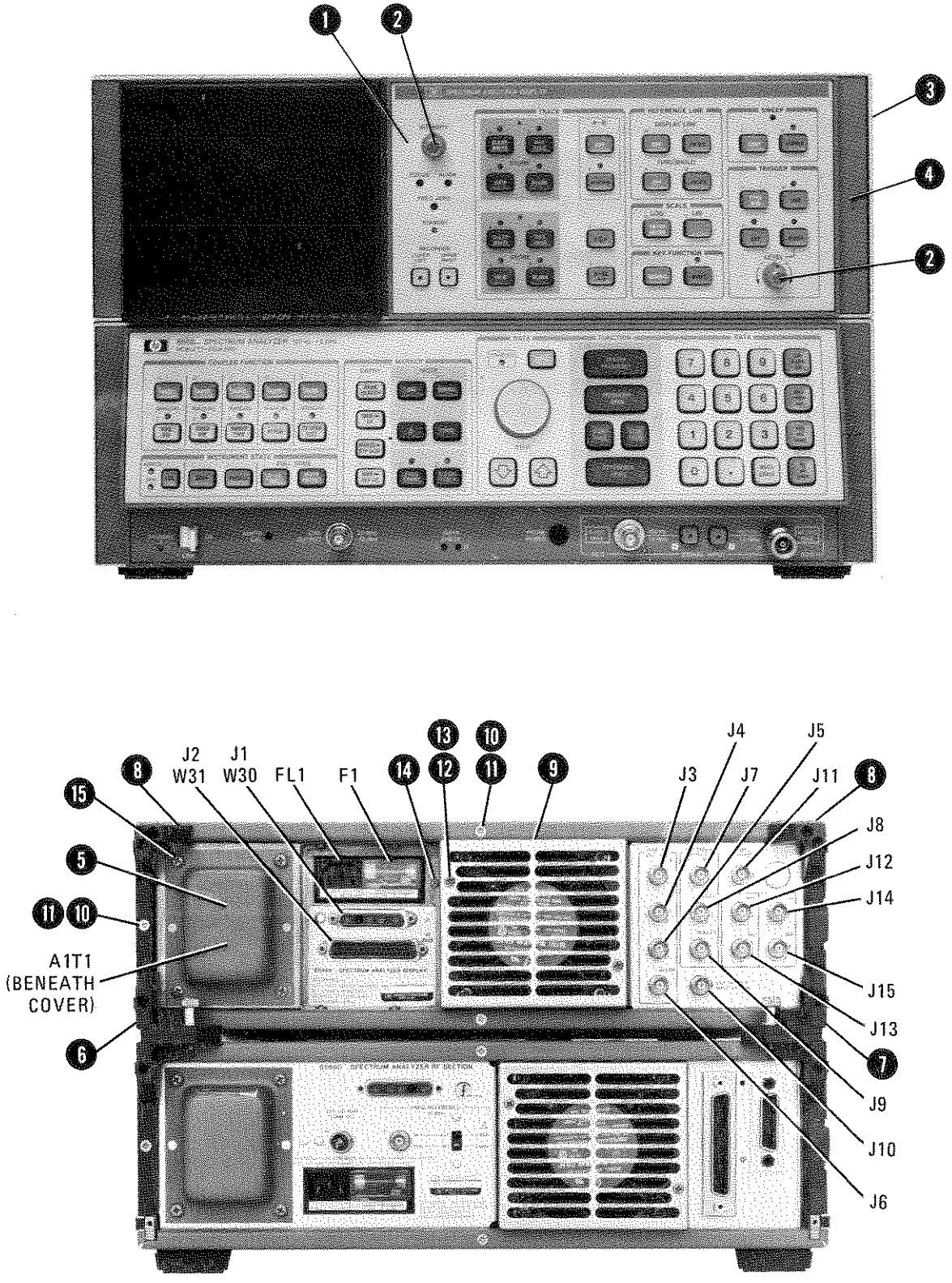

NOTE: FOR IF/RF SECTION INTERCONNECT CABLES (W30, W31), SEE TABLE 4.

FIGURE 1. IF-DISPLAY SECTION PARTS IDENTIFICATION, FRONT/BACK VIEW (2 OF 2)

Item	HP Part Number	C D	Description	Mfr. Code	Mfr. Part Number
1	5060-9912	4	Cover, Side, Perf.	28480	5060-9912
2	5060-9937	3	Cover, Side, Perf.	28480	5060-9937
3	5060-9835	0	Cover – 18"	28480	5060-9835
4	5060-9804	3	Strap Handle Assy – 18"	28480	5060-9804
5	5040-7220	1	Cover, Strap Handle, Rear	28480	5040-7220
6	5040-7219	8	Cover, Strap Handle, Front	28480	5040-7219
7	5040-7253	0	Bezel, CRT	28480	5040-7253
8	5020-8803	6	Frame, Front	28480	5020-8803
9	5020-8896	7	Trim Strip	28480	5020-8896
10	5040-7221	2	Foot, Rear	28480	5040-7221
11	5020-8939	9	Lock Foot, Left	28480	5020-8939
12	5020-8937	7	Lock Foot, Right	28480	5020-8937
13	2680-0172	1	Screw, 10-32, .375-IN-LG FL HD	28480	2680-0172
14	2510-0195	9	Screw, 8-32	28480	2510-0195

FIGURE 2. IF-DISPLAY SECTION PARTS IDENTIFICATION, SIDE VIEW (1 OF 2)

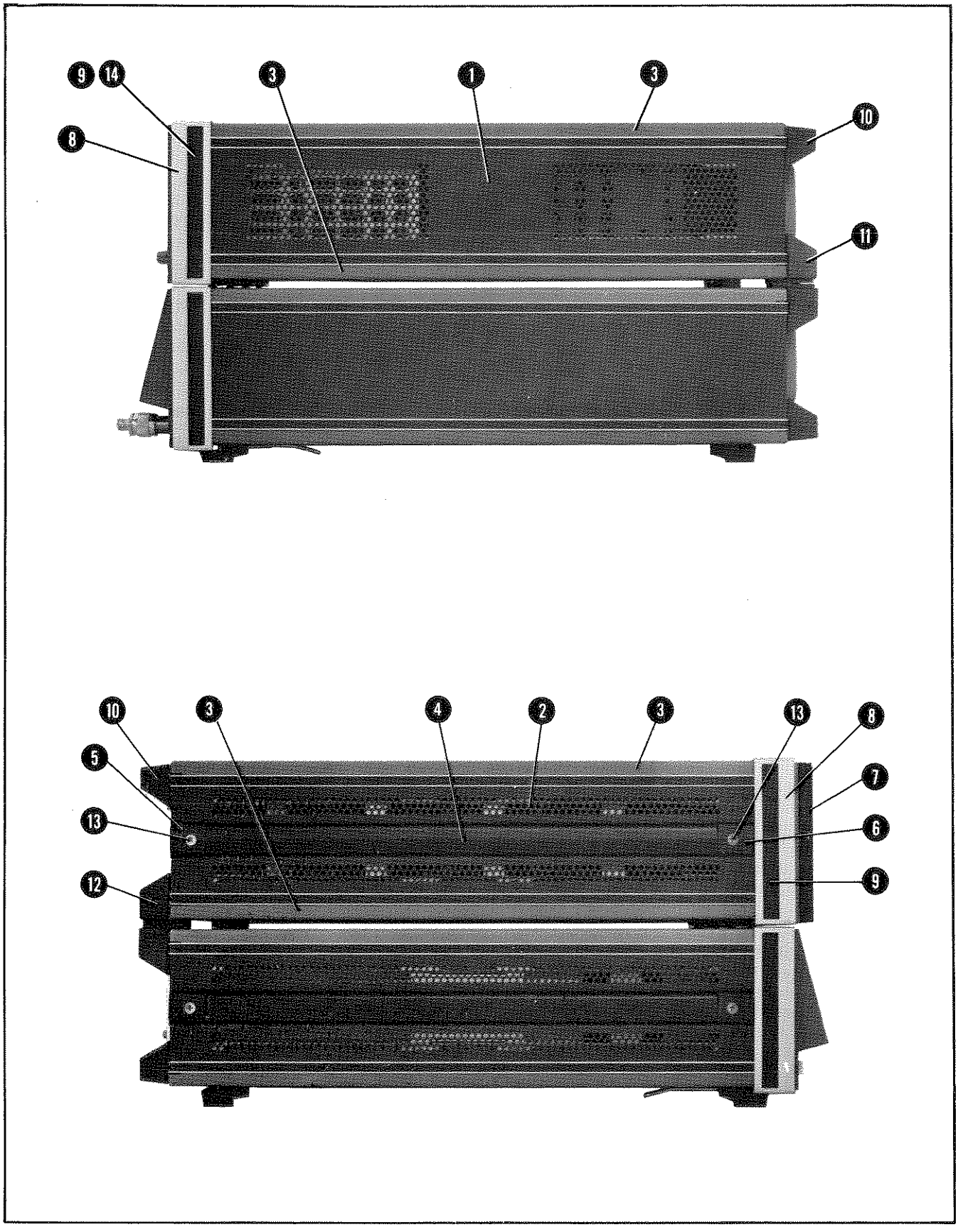

FIGURE 2. IF-DISPLAY SECTION PARTS IDENTIFICATION, SIDE VIEW (2 OF 2)

Item	HP Part Number	C D	Description	Mfr. Code	Mfr. Part Number
1	85662-20041	5	Cover, A4A1 Assembly	28480	85662-20041
2	85662-20040	4	Cover, A4A2 Assembly	28480	85662-20040
3	85662-20037	9	Cover, A4A3 Assembly	28480	85662-20037
4	85662-20036	8	Cover, A4A4 Assembly	28480	85662-20036
5	85662-20148	3	Cover, A4A5 Assembly	28480	85662-20148
6	85662-20039	1	Cover, A4A6 Assembly	28480	85662-20039
7	85662-20034	6	Cover, A4A7 Assembly	28480	85662-20034
8	85662-20038	0	Cover, A4A8 Assembly	28480	85662-20038
9	85662-00075	3	Cover, Digital Storage	28480	85662-00075
10	85662-00036	6	Cover, HV Supply	28480	85662-00036
11	85662-00049	1	Shroud, Airduct (Voltage Regulator Cover)	28480	85662-00049
12	85662-00052	6	Cover, Side HV	28480	85662-00052
13	85660-20030	2	Frame, Rear	28480	85660-20030
14	5020-8882	1	Strut, Corner, 18"	28480	5020-8882
15	5020-8803	6	Frame, Front	28480	5020-8803
16	85662-20064	2	Bezel, Mainframe	28480	85662-20064
17	5040-7253	0	Bezel, CRT	28480	5040-7253
18	5040-7202	9	Trim, Top	28480	5040-7202
19	01332-60602	3	Shield, CRT, Front	28480	
20	1220-0203	4	Shield, CRT, Rear	28480	1220-0203
21	08505-00121	8	Clamp, CRT Shield	28480	08505-00121
22	85662-00037	7	Shield, Amplifier	28480	85662-00037
23	85662-20092	6	IF Housing Casting	28480	85662-20092
24	85662-00046	8	Bracket, PC Board	28480	85662-00046
25	85662-60099	7	Shield Assy-Digital Storage (Beneath Cover 9)	28480	85662-60099
26	85660-00041	3	Bracket, Dual Capacitor	28480	85660-00041
26	85662-00062	8	Bracket, Tri-Capacitor (Option 400)	28480	85662-00062
27	5060-9899	6	Front Handles	28480	5060-9899
28	85662-00040	2	Bracket, Capacitor	28480	85662-00040
29	86701-00007	1	Guard, Fan	28480	86701-00007
30	2360-0197	2	Screw, 6-32, .5-IN-LG PAN-HD	28480	2360-0197
31	3050-0227	3	Washer, F1 For Screw	28480	3050-0227
32	2190-0006	1	Washer, LK For Screw	28480	2190-0006
33	1400-0017	0	Clamp-Cable, .312-DIA, .375-WIDE	28480	1400-0017
34	2510-0192	6	Screw, 8-32, .25-IN-LG 100 DEG FH	28480	2510-0192
35	2510-0195	9	Screw, 8-32, .375-IN-LG 100 DEG FH	28480	2510-0195
36	2360-0115	4	Screw, 6-32, .312-IN-LG PAN HD	28480	2360-0115
37	85662-20042	6	Guide-HV, Nylon	28480	85662-20042
38	3050-0105	6	Washer-FL MTLC No. 4 .125 IN-ID	28480	3050-0105
39	2360-0113	2	Screw, 6-32, .25-IN-LG PAN-HD	28480	2360-0113
40	2360-0221	3	Screw, 6-32, .25-IN-LG PAN-HD	28480	2360-0221
41	2200-0107	6	Screw, 4-40, .375-IN-LG	28480	2200-0107
42	2200-0103	2	Screw, 4-40, .25-IN-LG PAN-HD	28480	2200-0103
43	2360-0117	6	Screw, MACH 6-32, .375-IN-LG PAN-HD-POZI	28480	2360-0117
44	3050-0227	3	Washer-FL MTLC No. 4 .125-IN-ID	28480	3050-0227
A1T1			See Table 4 of this Tab		
FL1			See Table 4 of this Tab		
W6			See Table 4 of this Tab		
W7			See Table 4 of this Tab		

FIGURE 3. IF-DISPLAY SECTION PARTS IDENTIFICATION, TOP VIEW (1 OF 2)

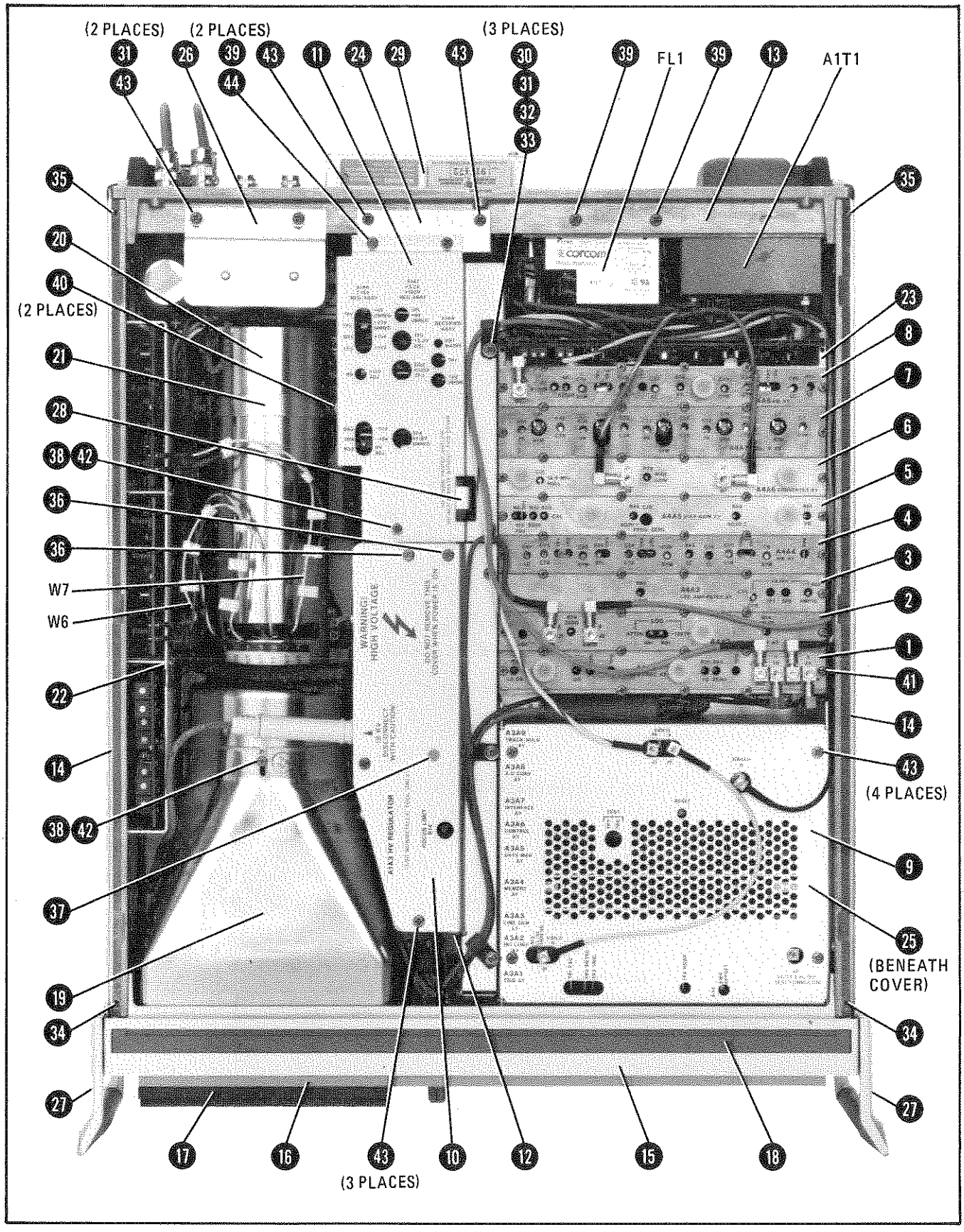

FIGURE 3. IF-DISPLAY SECTION PARTS IDENTIFICATION, TOP VIEW (2 OF 2)

Item	HP Part Number	C D	Description	Mfr. Code	Mfr. Part Number
1	85662-20030	2	Frame, Rear	28480	85662-20030
2	2510-0195	9	Screw, 8-32, .375-IN-LG 100 DEG FH	28480	2510-0195
3	5020-8882	1	Strut, Corner, 18"	28480	5020-8882
4	2190-0011	8	Washer-LK For Screw	02440	1022
5	2680-0099	1	Screw, 10-32, .375-IN-LG PAN-HD	28480	2680-0099
6	2360-0113	2	Screw, 6-32, .25-IN-LG PAN-HD	28480	2360-0113
7	1400-1218	5	Clamp, Cable	28480	1400-1218
8	2360-0113	2	Screw, 6-32, .25-IN-LG PAN-HD	28480	2360-0113
9	3050-0105	6	Washer-F1 For Screw	28480	3050-0105
10	2190-0003	8	Washer-LK For Screw	28480	2190-0003
11	1220-0203	4	Shield, CRT, Rear	28480	1220-0203
12	2200-0103	2	Screw, 4-40, .25-IN-LG PAN-HD	28480	2200-0103
13	2510-0192	6	Screw, 8-32, .15-IN-LG 100 DEG FH	28480	2510-0192
14	5020-8803	6	Frame, Front	28480	5020-8803
15	85662-20064	2	Bezel, Mainframe	28480	85662-20064
16	5040-7253	0	Bezel, CRT	28480	5040-7253
17	0520-0163	0	Screw, 2-56, .18-IN-LG 82 DEG FH	28480	0520-0163
18	2360-0118	7	Screw, 6-32, .375-IN-LG 82 DEG FH	28480	2360-0118
19	2200-0105	4	Screw, 4-40, .312-IN-LG PAN-HD	28480	2200-0105
20	85662-20031	3	Support, Center Member	28480	85662-20031
21	2360-0121	2	Screw, 6-32, .500-IN-LG PAN-HD	28480	2360-0121
22	85662-00053	7	Strap	28480	85662-00053
23	2360-0115	4	Screw, 6-32, .312-IN-LG PAN-HD	28480	2360-0115
24	2360-0116	5	Screw, 6-32, .312-IN-LG 82 DEG FH	28480	2360-0116
25	01332-60602	3	Shield, CRT, Front	28480	01332-60602
A1T1			See Table 4 of this Tab		
A1V1			See Table 4 of this Tab		
A3A10			Refer To Individual Assembly Parts Tables		
A4A10			Refer To Individual Assembly Parts Tables		
W8			See Table 4 of this Tab		
W23			"		
W24			"		
W25			"		
W26			"		
W27			"		
W28			"		
W29			"		

FIGURE 4. IF-DISPLAY SECTION PARTS IDENTIFICATION, BOTTOM VIEW (1 OF 2)

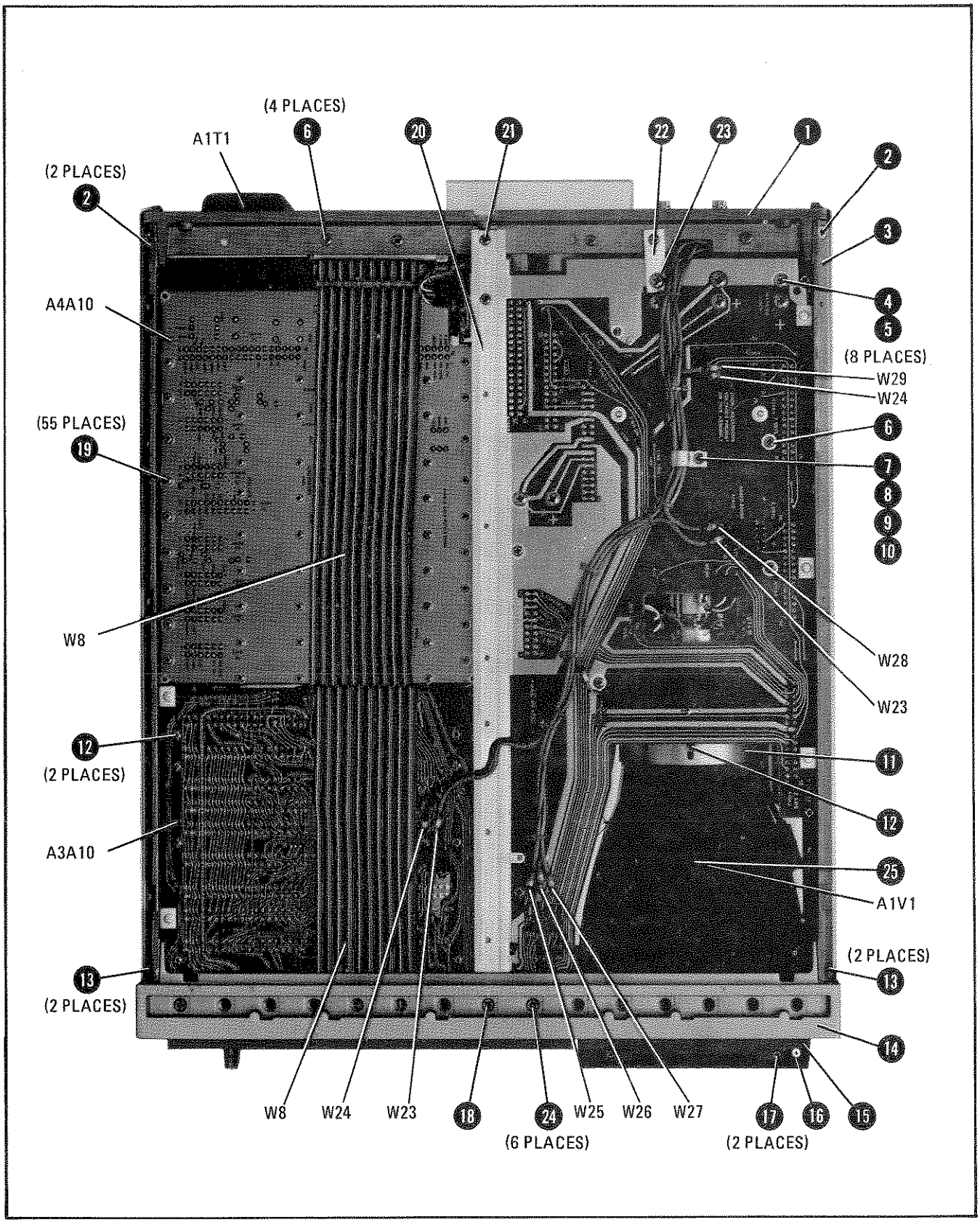

FIGURE 4. IF-DISPLAY SECTION PARTS IDENTIFICATION, BOTTOM VIEW (2 OF 2)

Item	HP Part Number	C D	Description	Mfr. Code	Mfr. Part Number
1	5041-0690		Key VIEW	28480	5041-0690
2	5041-0688		Key CLEAR WRITE	28480	5041-0688
3	5041-0807		Key BLANK	28480	5041-0807
4	5041-0689		Key MAX HOLD	28480	5041-0689
5	5041-0732		Key A B - A	28480	5041-0732
6	5041-0693		Key OFF	28480	5041-0693
7	5041-0696		Key ENTER	28480	5041-0696
8	5041-0700		Key CONT	28480	5041-0700
9	5041-0701		Key SINGLE	28480	5041-0701
10	5041-0703		Key LINE	28480	5041-0703
11	5041-0702		Key FREE RUN	28480	5041-0702
12	5041-0705		Key VIDEO	28480	5041-0705
13	5041-0704		Key EXT	28480	5041-0704
14	5041-0310		Key LINEAR	28480	5041-0310
15	5041-0699		Key SHIFT	28480	5041-0699
16	5041-0733		Key ENTER dB/DIV	28480	5041-0733
17	5041-0697		Key NORMAL	28480	5041-0697
18	5041-0694		Key A B	28480	5041-0694
19	5041-0916		Key B DL -B	28480	5041-0916
20	5041-0691		Key BLANK	28480	5041-0691
21	5041-0806		Key CLEAR WRITE	28480	5041-0806
22	5041-0285		Key RECORDER	28480	5041-0285
23	85662-00030		Panel, Sub Front	28480	85662-00030
24	0624-0201		Screw, 4-40, .188-IN-LG 82 DET FT HD	28480	0624-0201
25	85662-20064		Bezel, Mainframe	28480	85662-20064
26	9135-0052		RFI Shield: Glass	28480	9135-0052
27	85662-00030		Panel, Sub Front	28480	85662-00030
28	2200-0103		Screw, 4-40, .25-IN-LG PAN-HD	28480	2200-0103
A1A1			Refer To Individual Assembly Parts Tables		
A1A1R1			"		
A1A1R2			"		
A1A1R3			"		
A1A1R8			"		
A1A1R12			"		
W1			See Table 4 of this Tab		
W9			"		

FIGURE 5. IF-DISPLAY SECTION PARTS IDENTIFICATION, FRONT PANEL VIEW (1 OF 2)

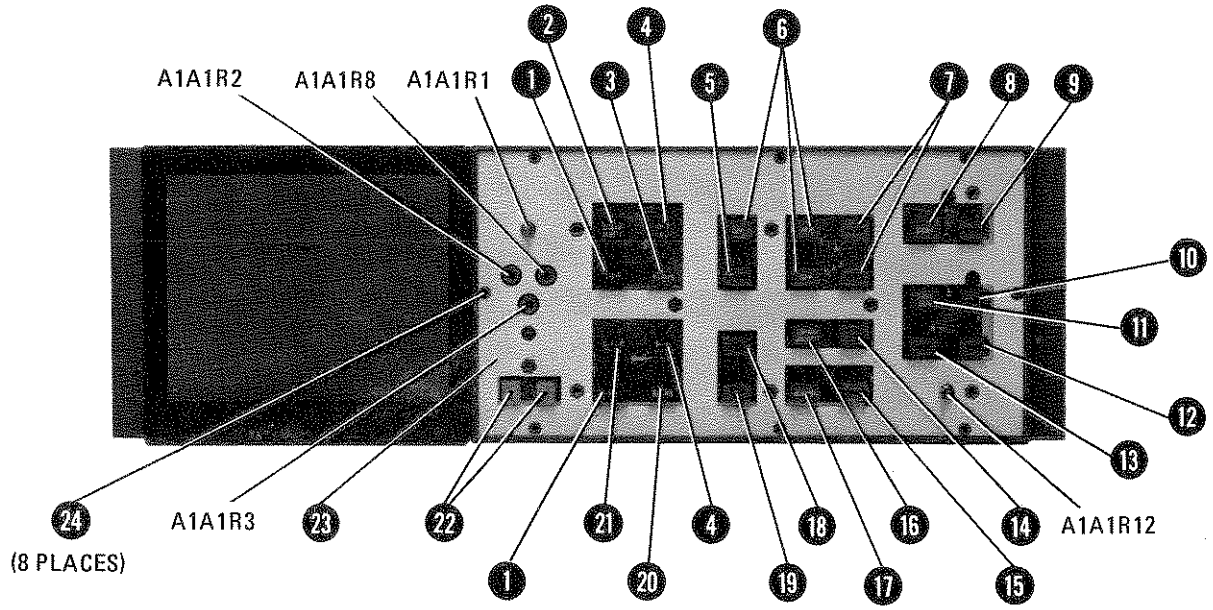

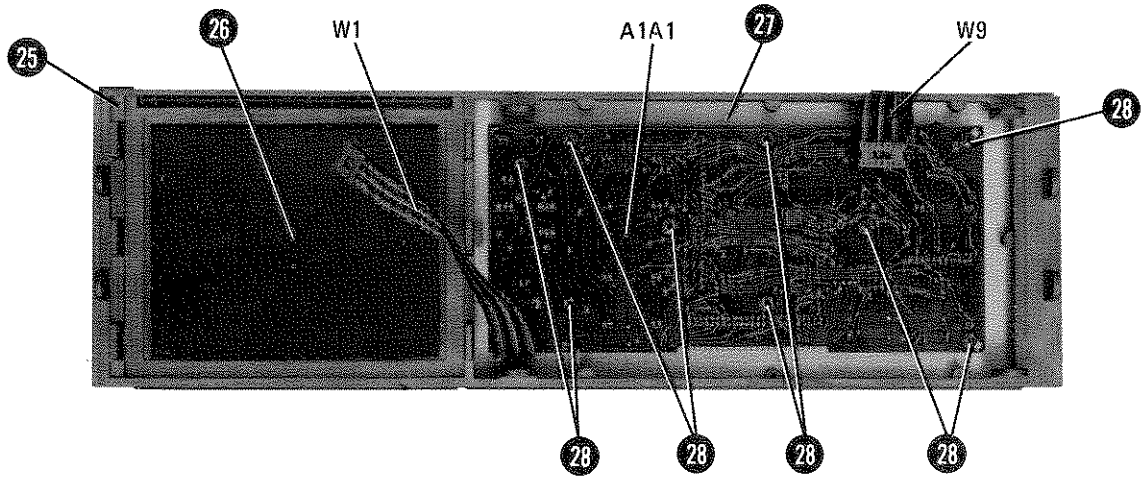

FIGURE 5. IF-DISPLAY SECTION PARTS IDENTIFICATION, FRONT-PANEL VIEW (2 OF 2)

Analog-Digital Converter A3A8
Attenuator-Bandwidth Filter A4A8
Bandwidth Filter A4A4
Bus Transition A1A9
CRT A1V1
Data Manipulator A3A5
Digital Storage Motherboard A3A10
Display Motherboard A1A10
Down/Up Converter A4A6
High Voltage Multiplier A1A11
High Voltage Regulator A1A3
IF Control A4A9
IF-Video Motherboard A4A10
Intensity Control A3A2
Interface A3A7
Keyboard A1A1
Line Generator A3A3
Log Amplifier-Detector A4A2
Log Amplifier-Filter A4A3
Main Control A3A6
Memory A3A4
Rectifier A1A8
Step Gain A4A5
Track and Hold A3A9
Trigger A3A1
Video Processor A4A1
X Deflection Amplifier A1A4
Y Deflection Amplifier A1A5
Z Axis Amplifier A1A2
3 MHz Bandwidth Filter A4A7

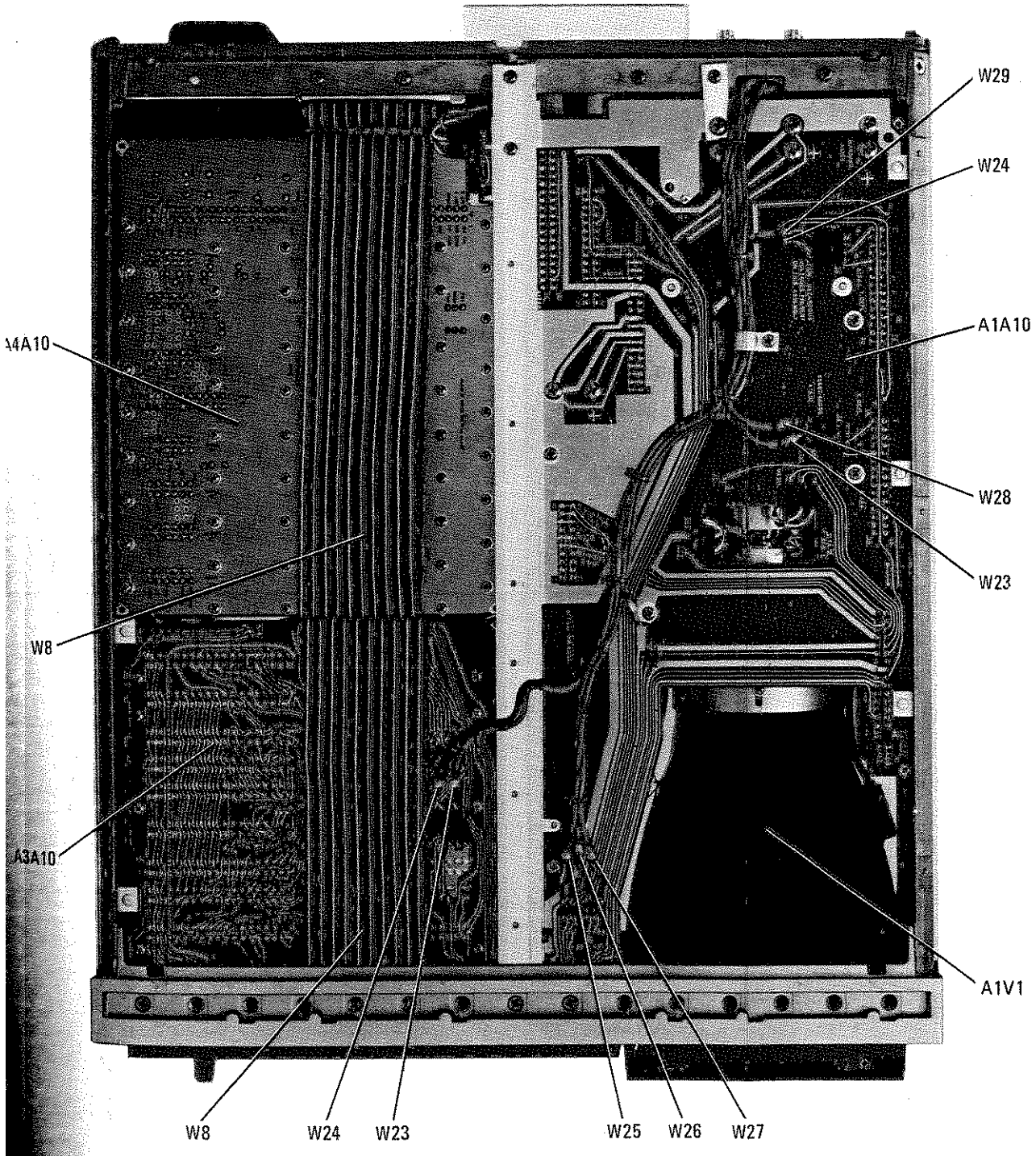

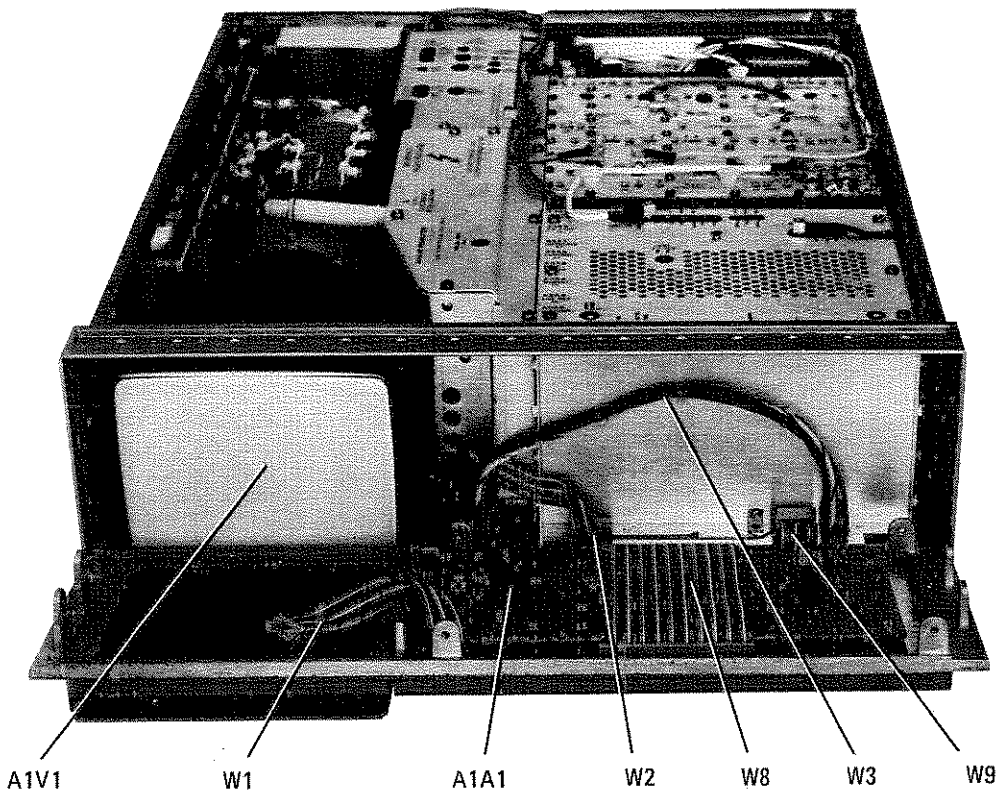

A1

A1A10C3

A1A5

W7

A1A11

A1A4

W6

W21

A1A2

A1V1

A1A3

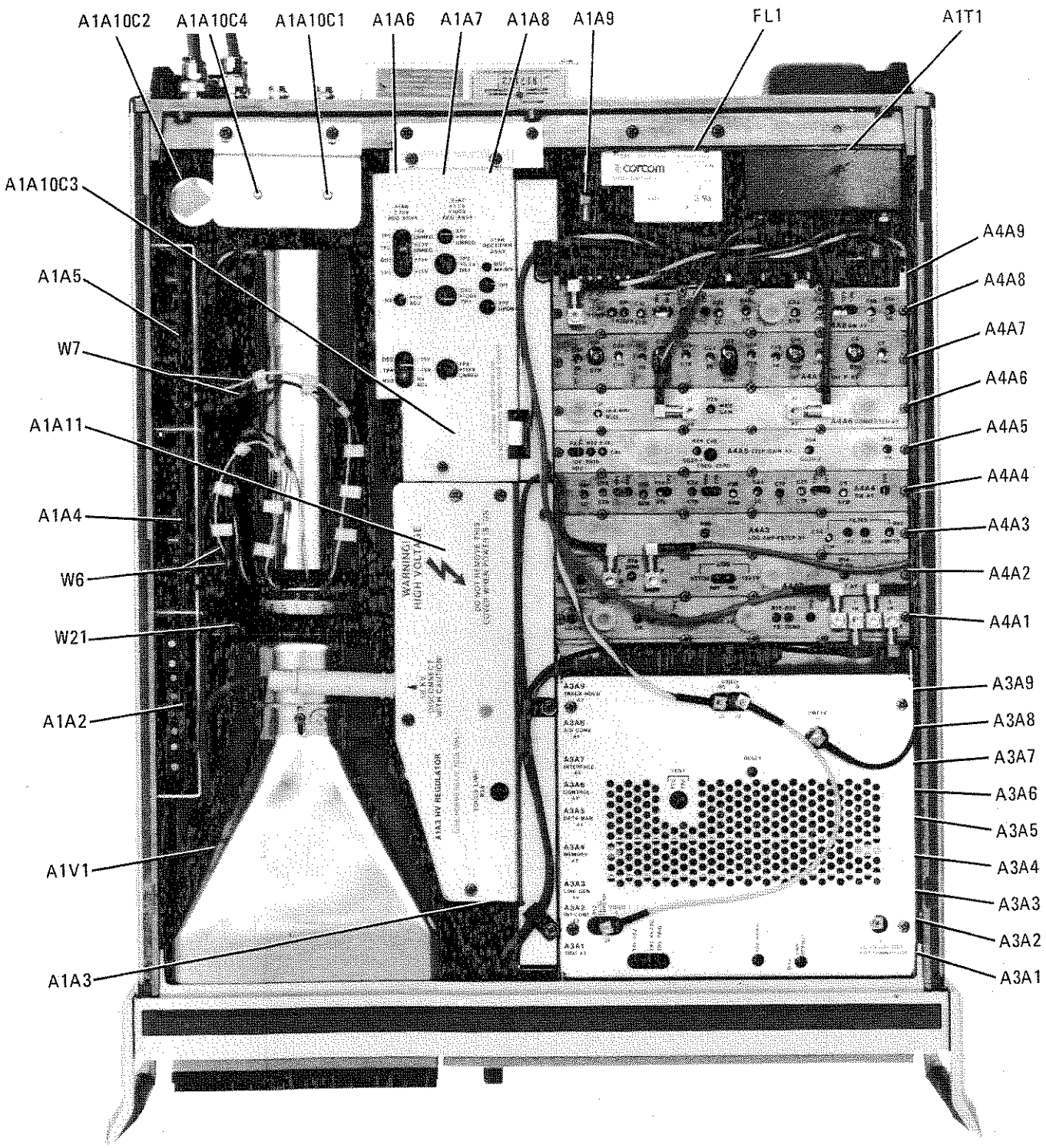

FIGURE 1. MAJOR ASSEMBLY, COMPONENT LOCATIONS