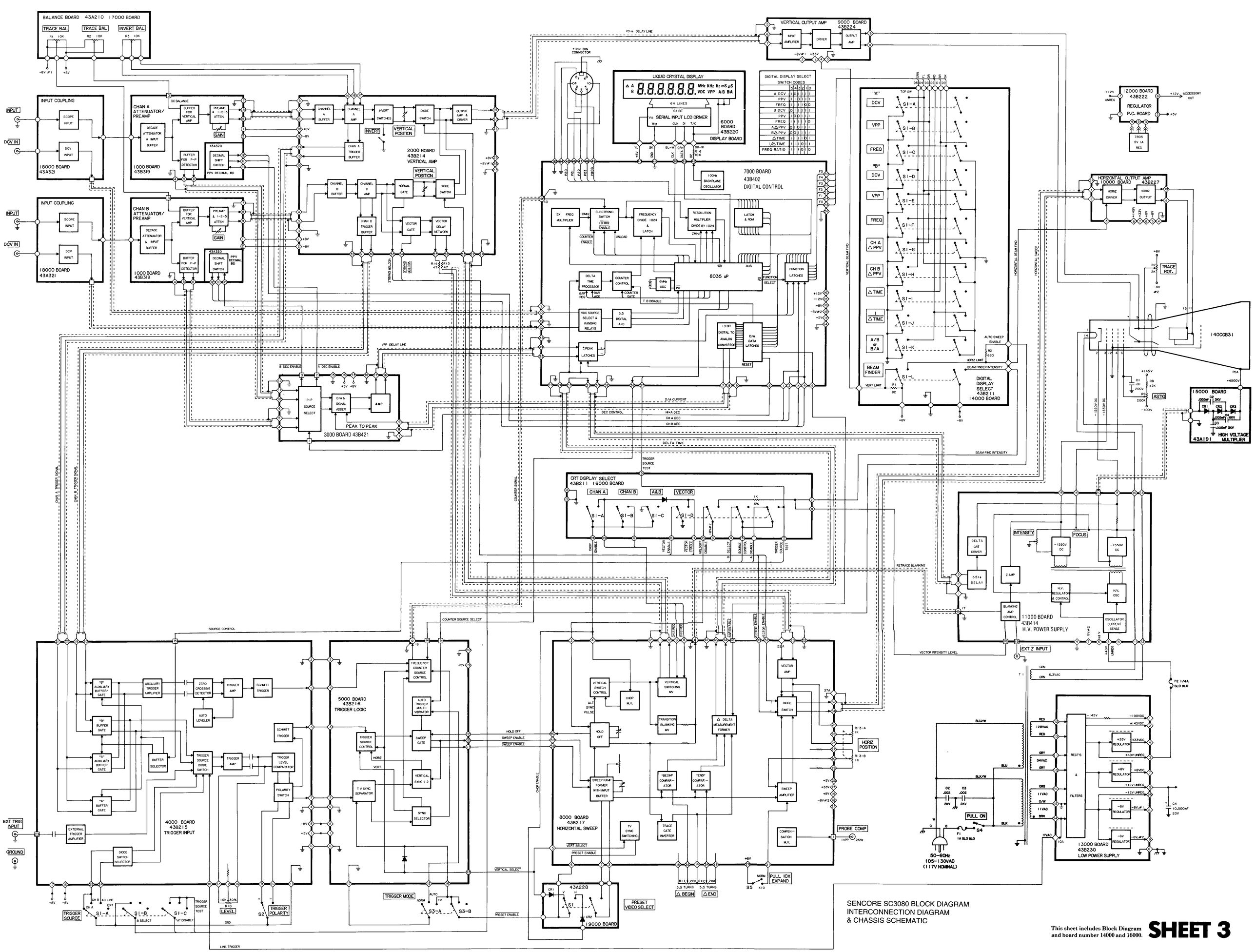

SENCORE SC3080 BLOCK DIAGRAM
INTERCONNECTION DIAGRAM
& CHASSIS SCHEMATIC

This sheet includes Block Diagram and board number 14000 and 16000.

SHEET 3

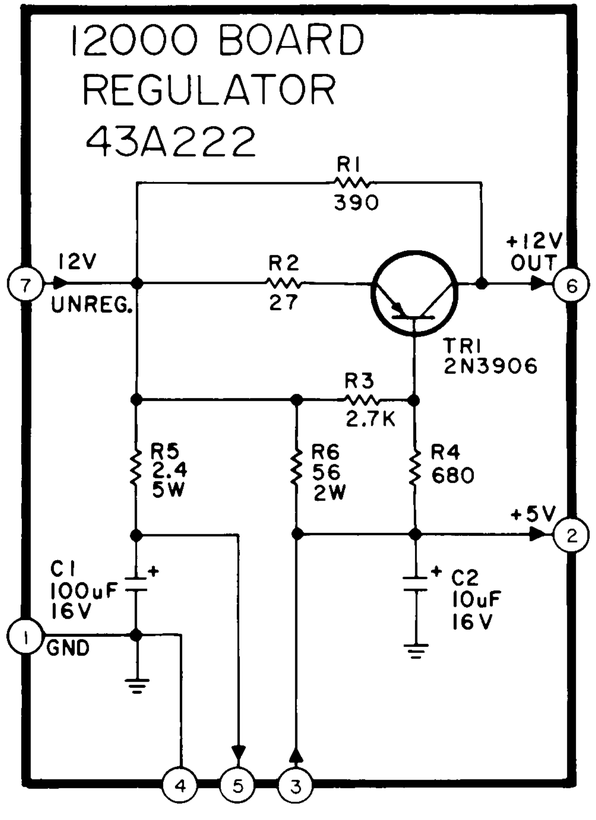

"12000" REGULATOR BOARD SCHEMATIC

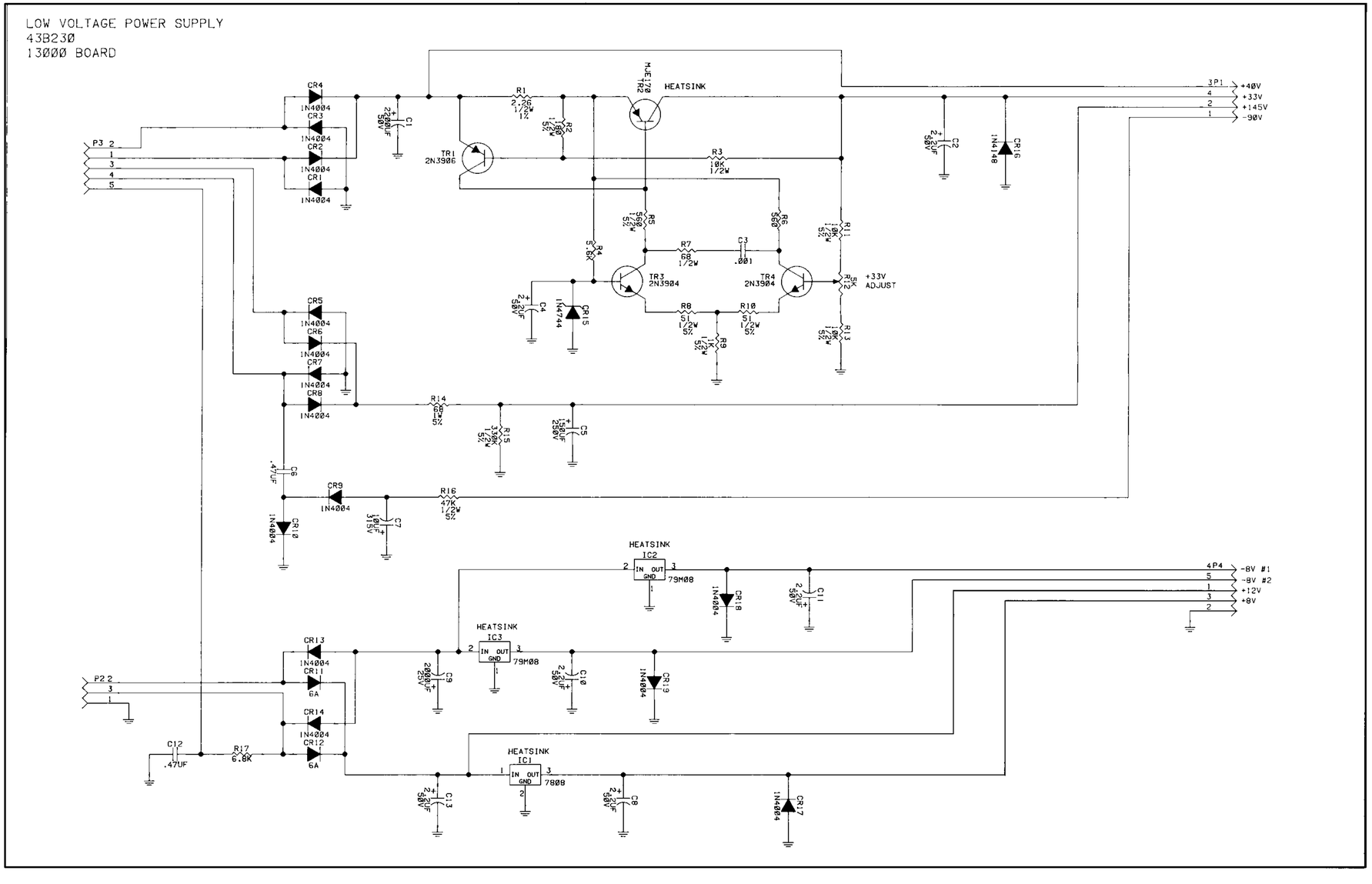

"13000" LOW VOLTAGE POWER SUPPLY BOARD SCHEMATIC

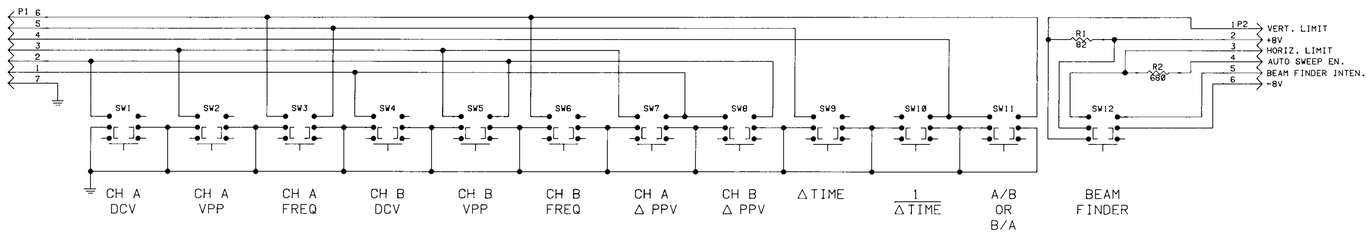

"14000"DIGITAL DISPLAY SELECT BOARD SCHEMATIC

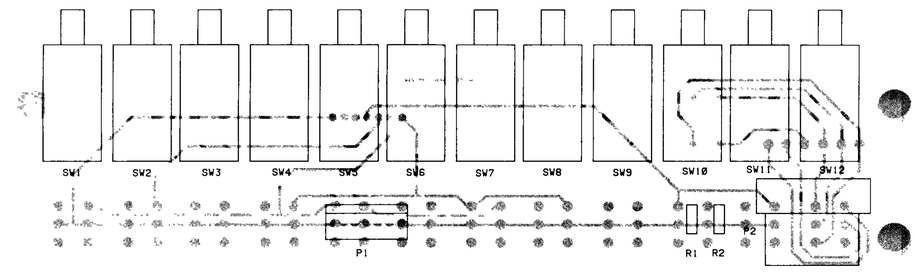

"14000" DIGITAL DISPLAY SELECT BOARD (Component View)

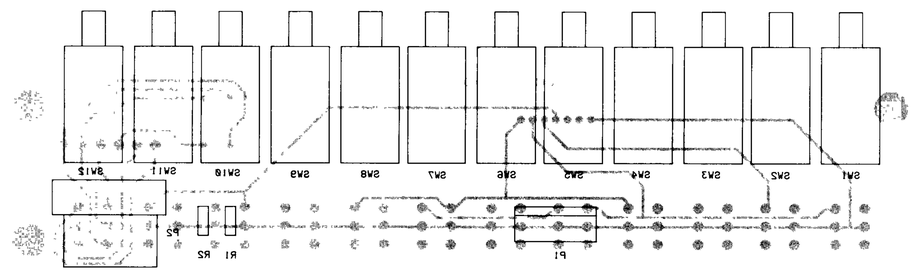

"14000" DIGITAL DISPLAY SELECT BOARD (Foil View)

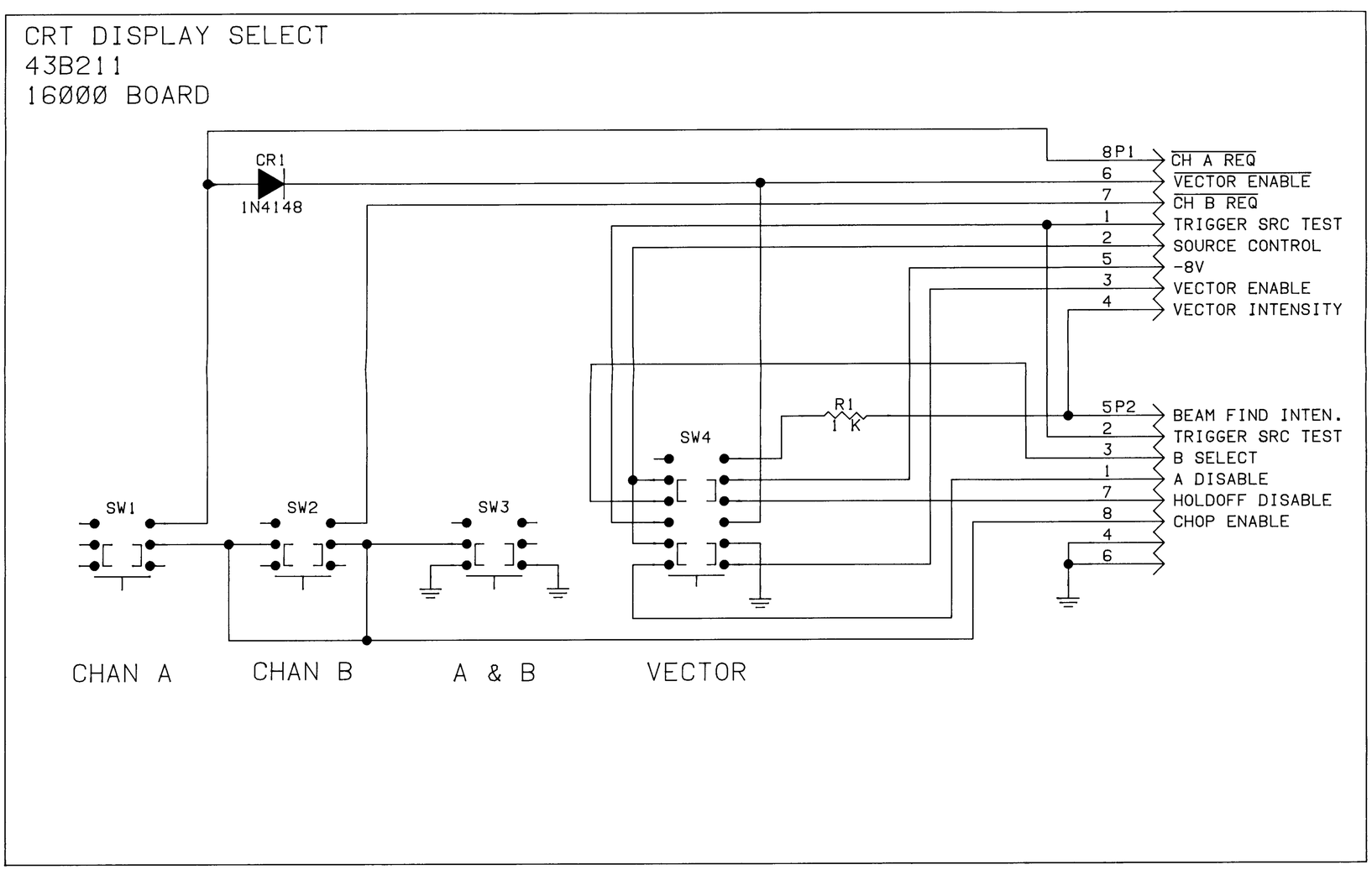

"16000" CRT DISPLAY SELECT BOARD SCHEMATIC

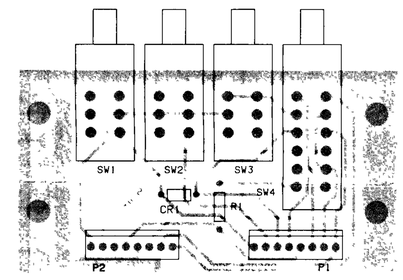

"16000" CRT DISPLAY SELECT BOARD (Component View)

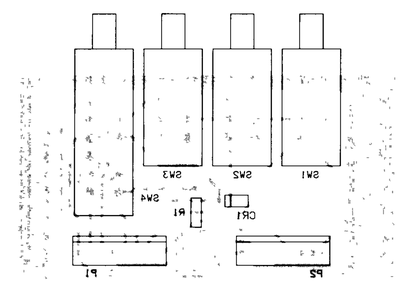

"16000" CRT DISPLAY SELECT BOARD (Foil View)

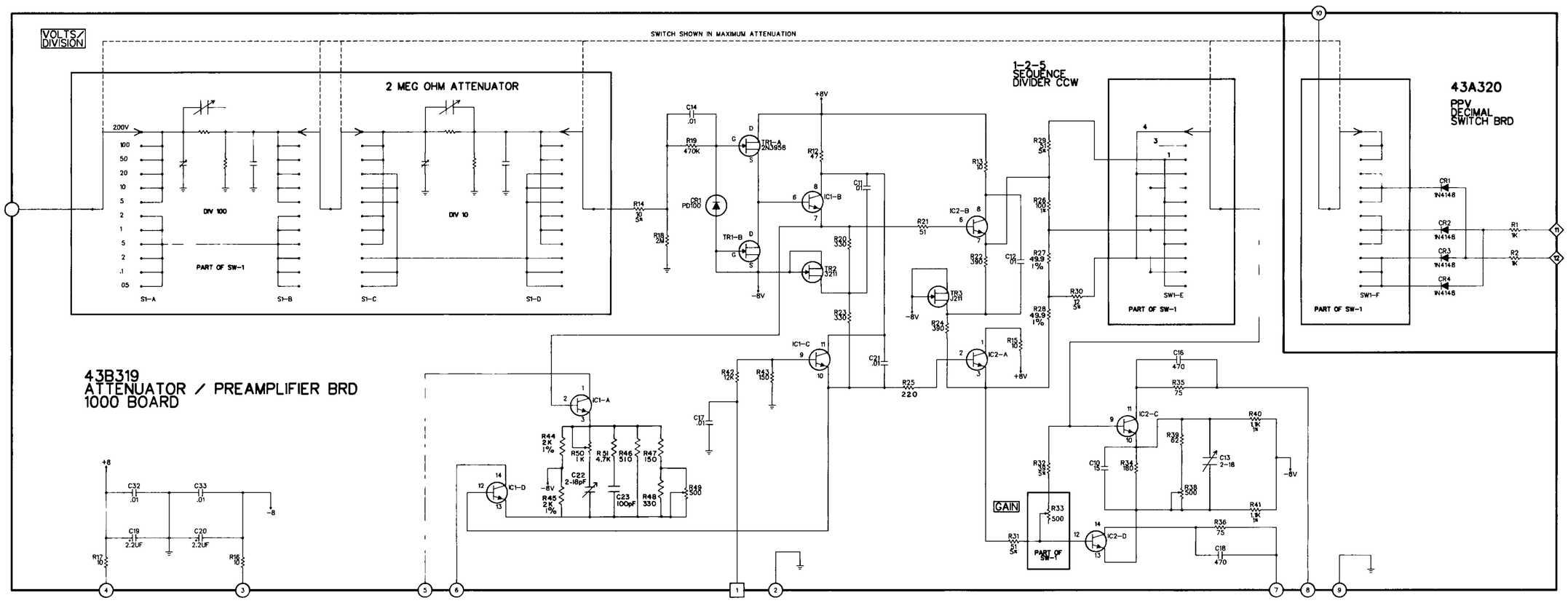

"1000" ATTENUATOR/PREAMPLIFIER BOARD SCHEMATIC

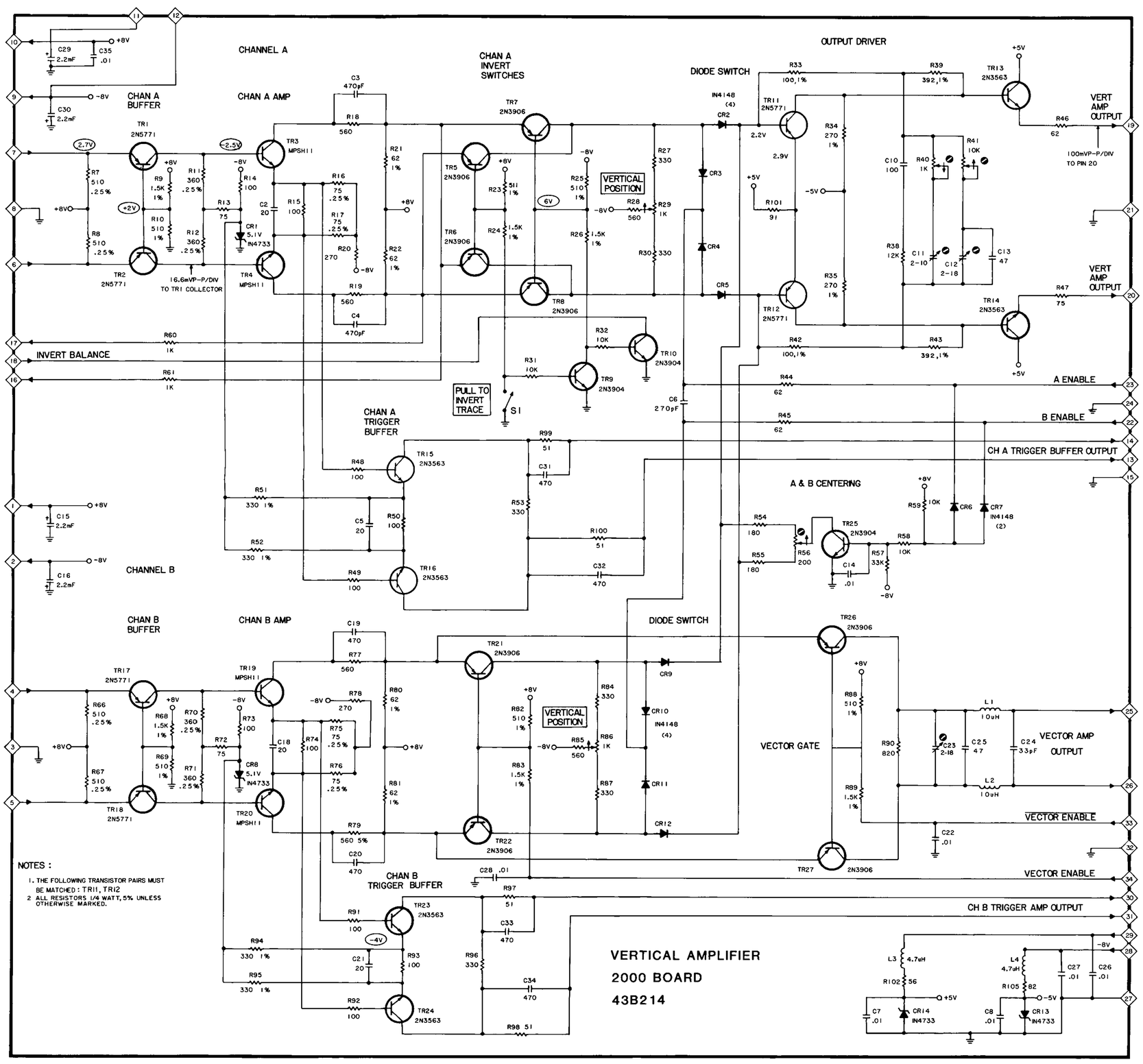

"2000" VERTICAL AMPLIFIER BOARD SCHEMATIC

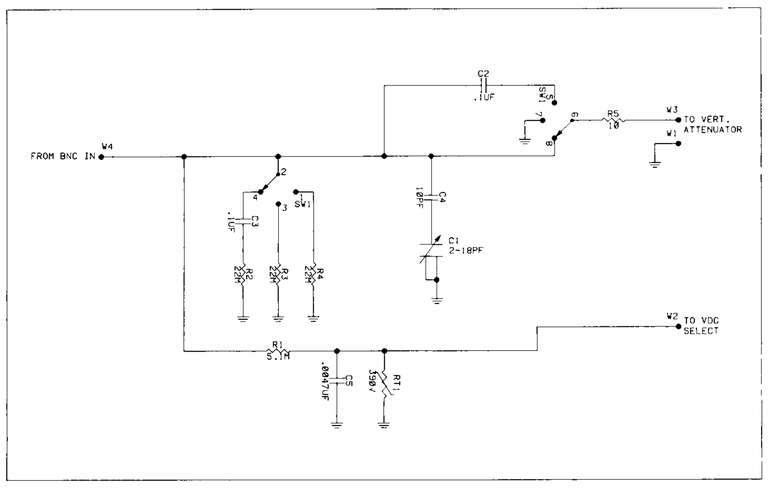

"18000" INPUT COUPLING BOARD SCHEMATIC

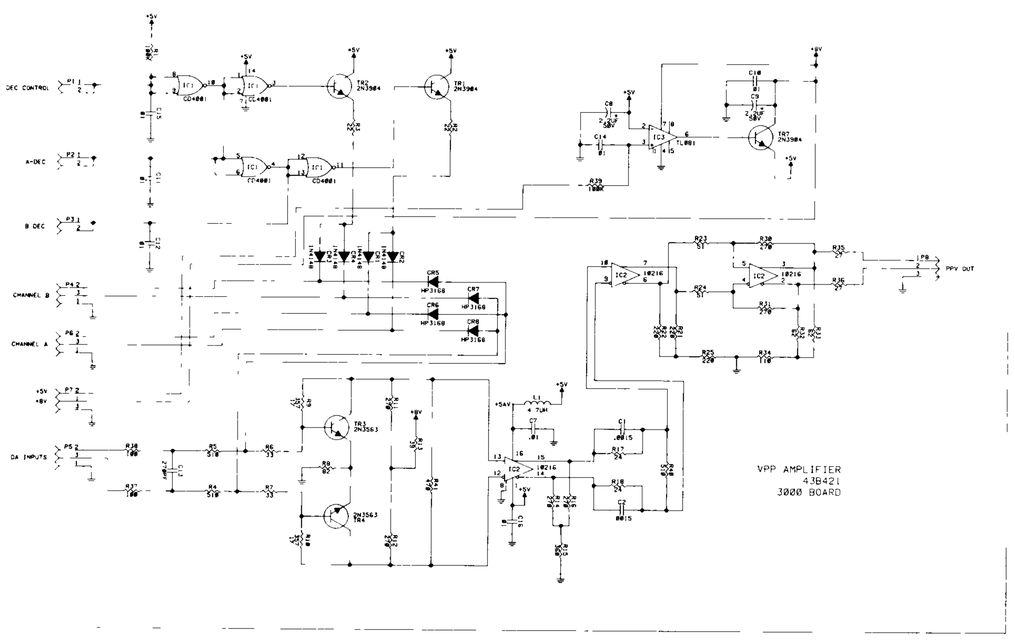

"3000" PEAK-TO-PEAK BOARD SCHEMATIC

This sheet includes board numbers 1000, 2000, 3,000, 5000, 8000, and 18000.

SHEET 4

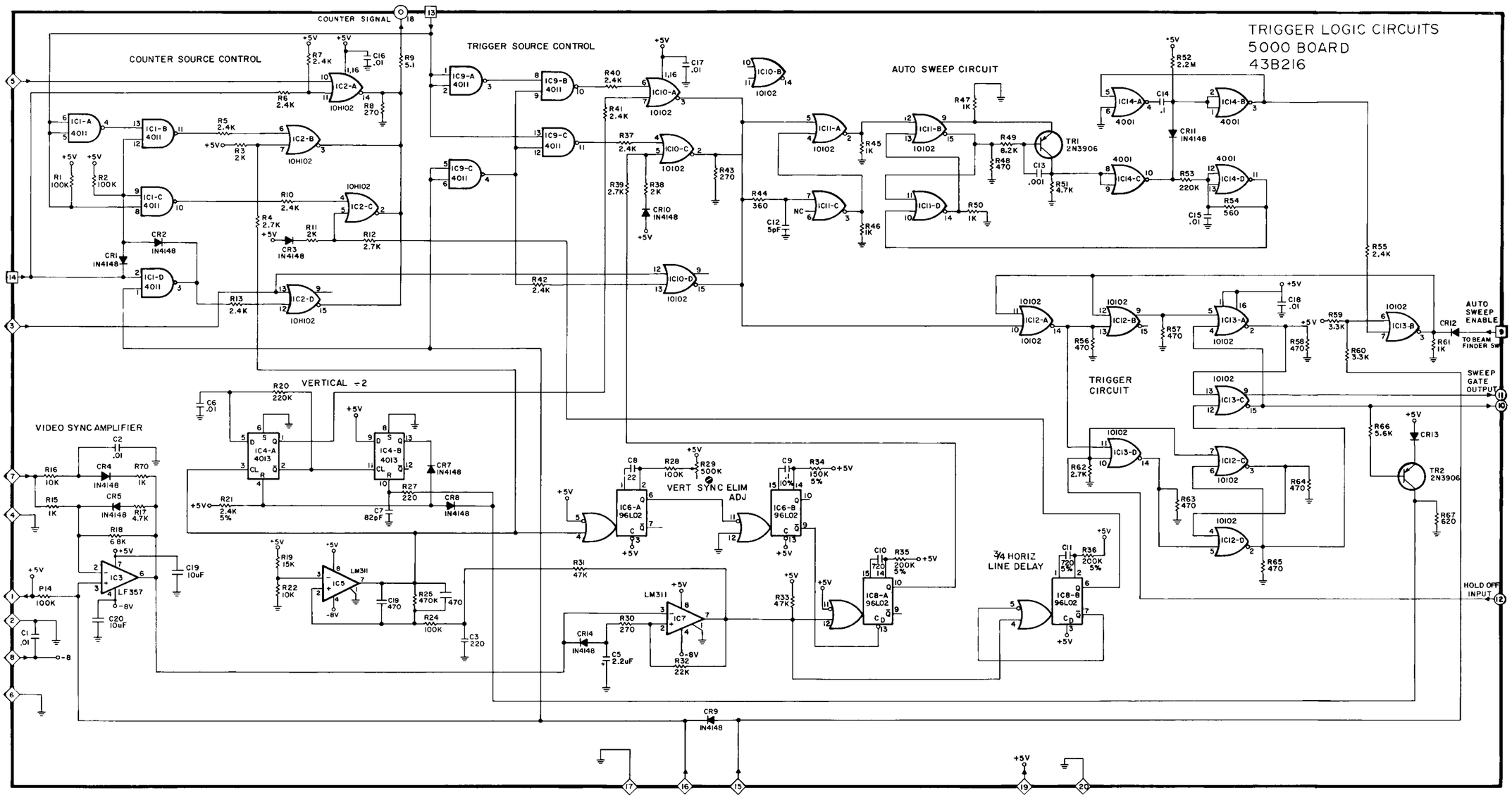

"5000" TRIGGER LOGIC BOARD SCHEMATIC

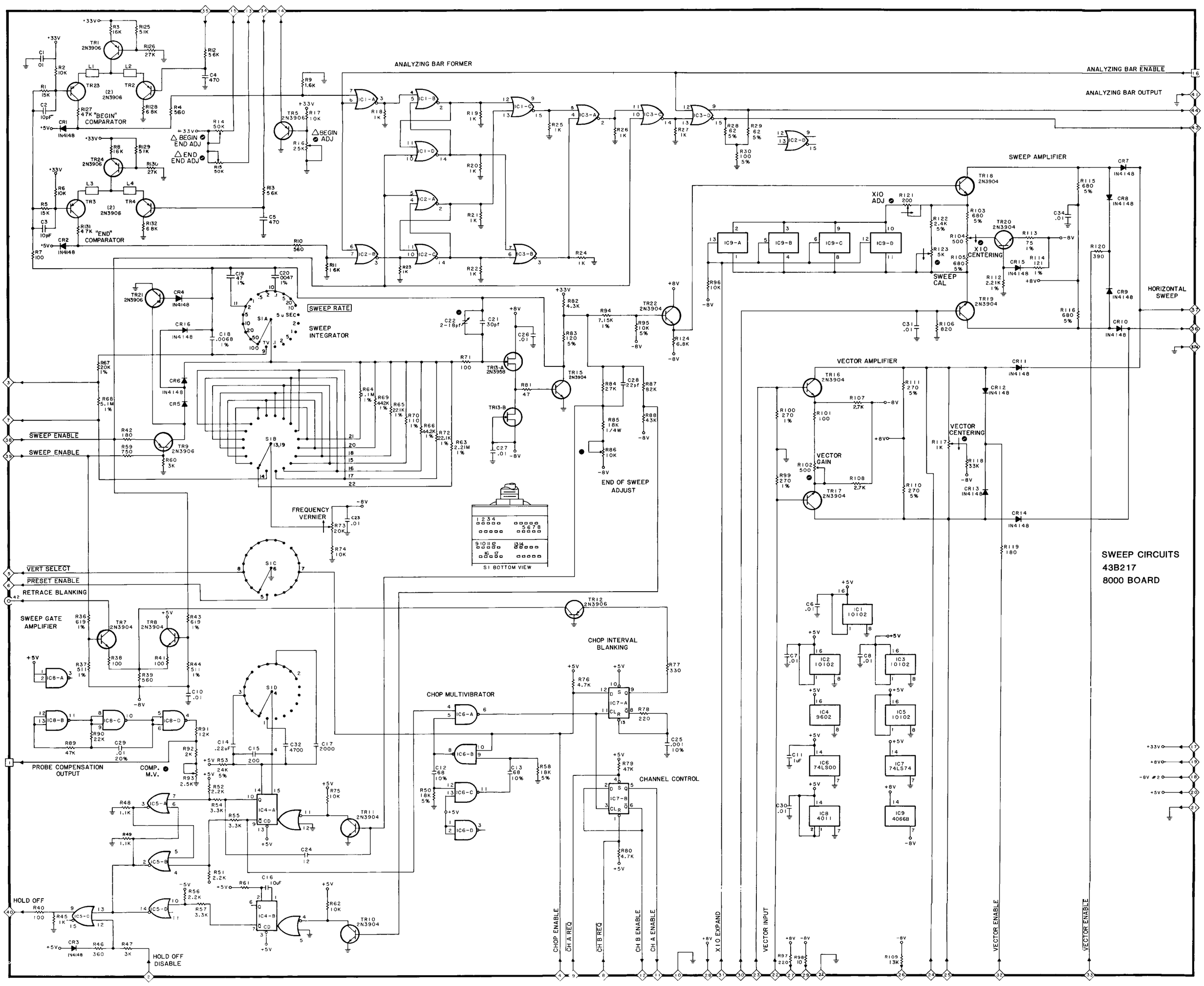

"8000" HORIZONTAL SWEEP BOARD SCHEMATIC

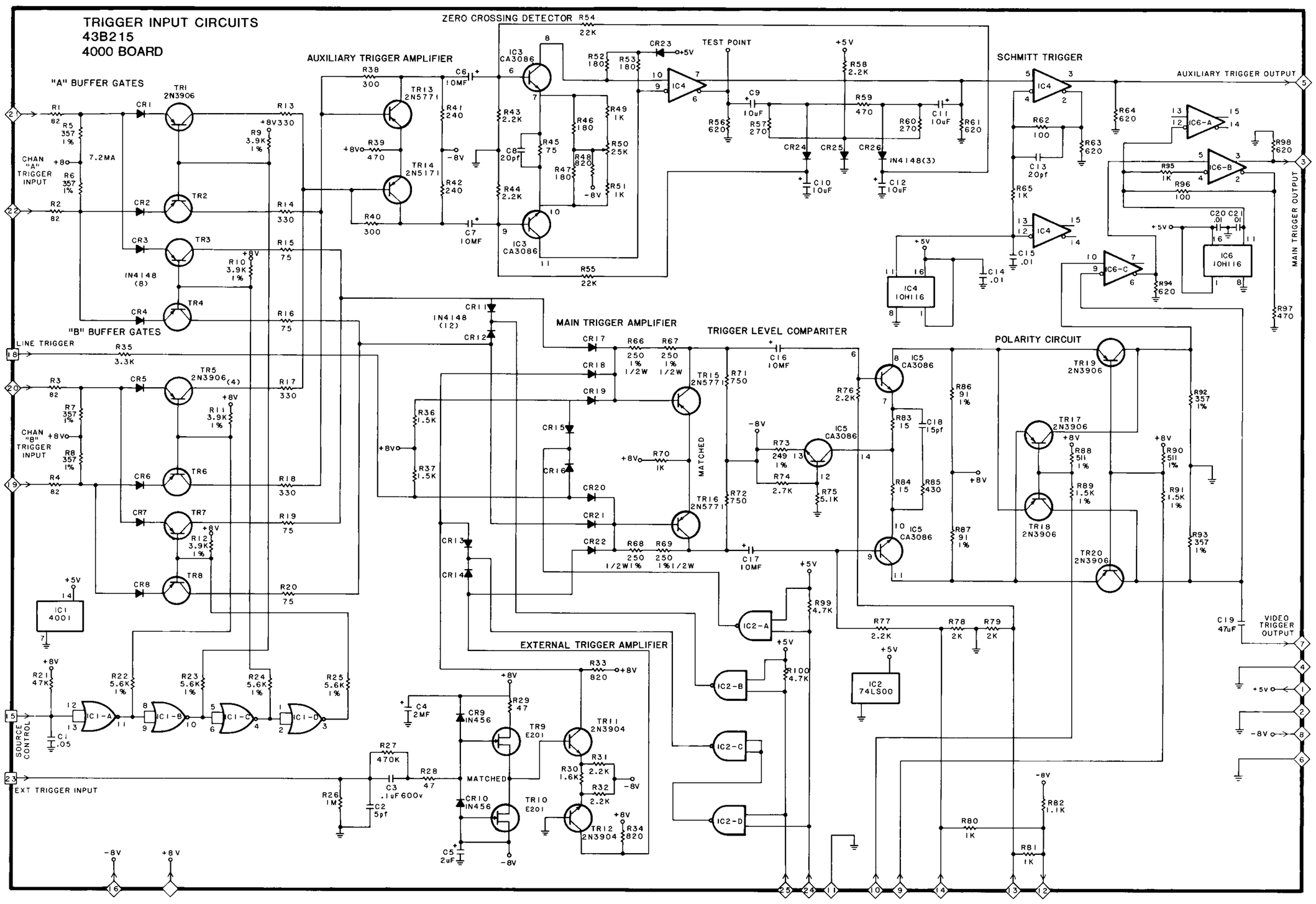

"4000" TRIGGER INPUT BOARD SCHEMATIC

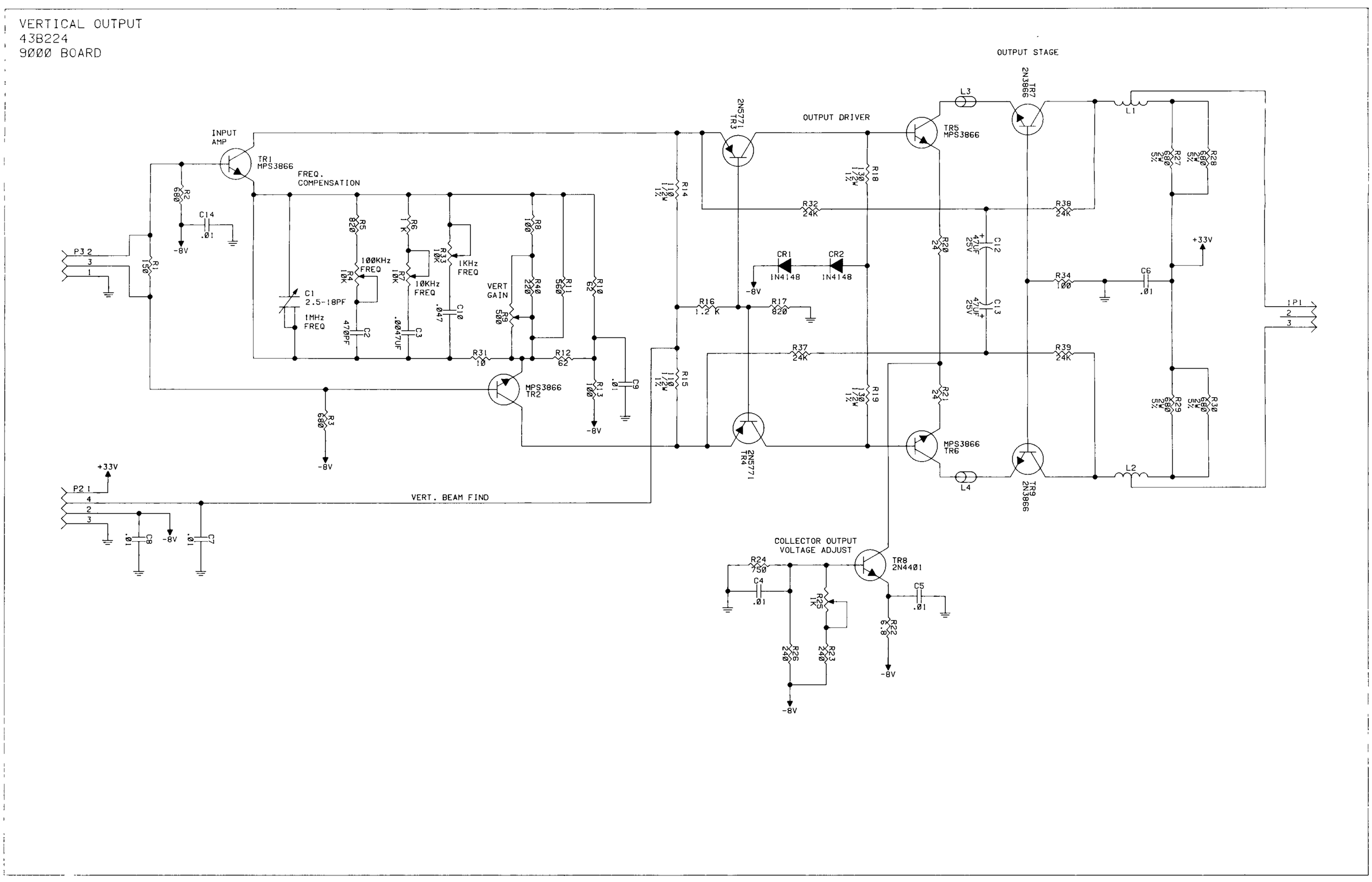

"9000" VERTICAL OUTPUT BOARD SCHEMATIC

This sheet includes board numbers 4000, 9000, 10000, and 11000.

SHEET 5

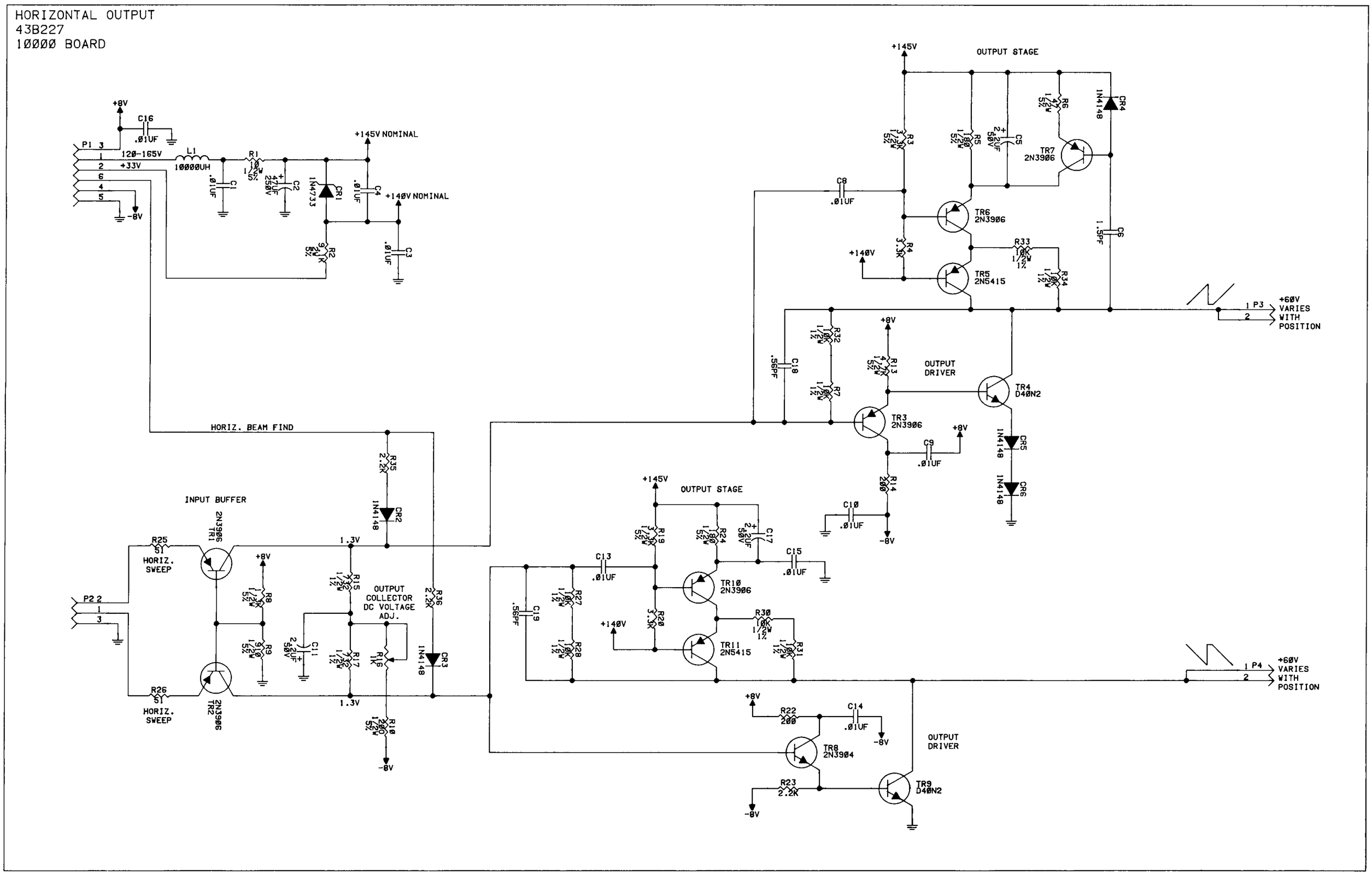

"10000" HORIZONTAL OUTPUT BOARD SCHEMATIC

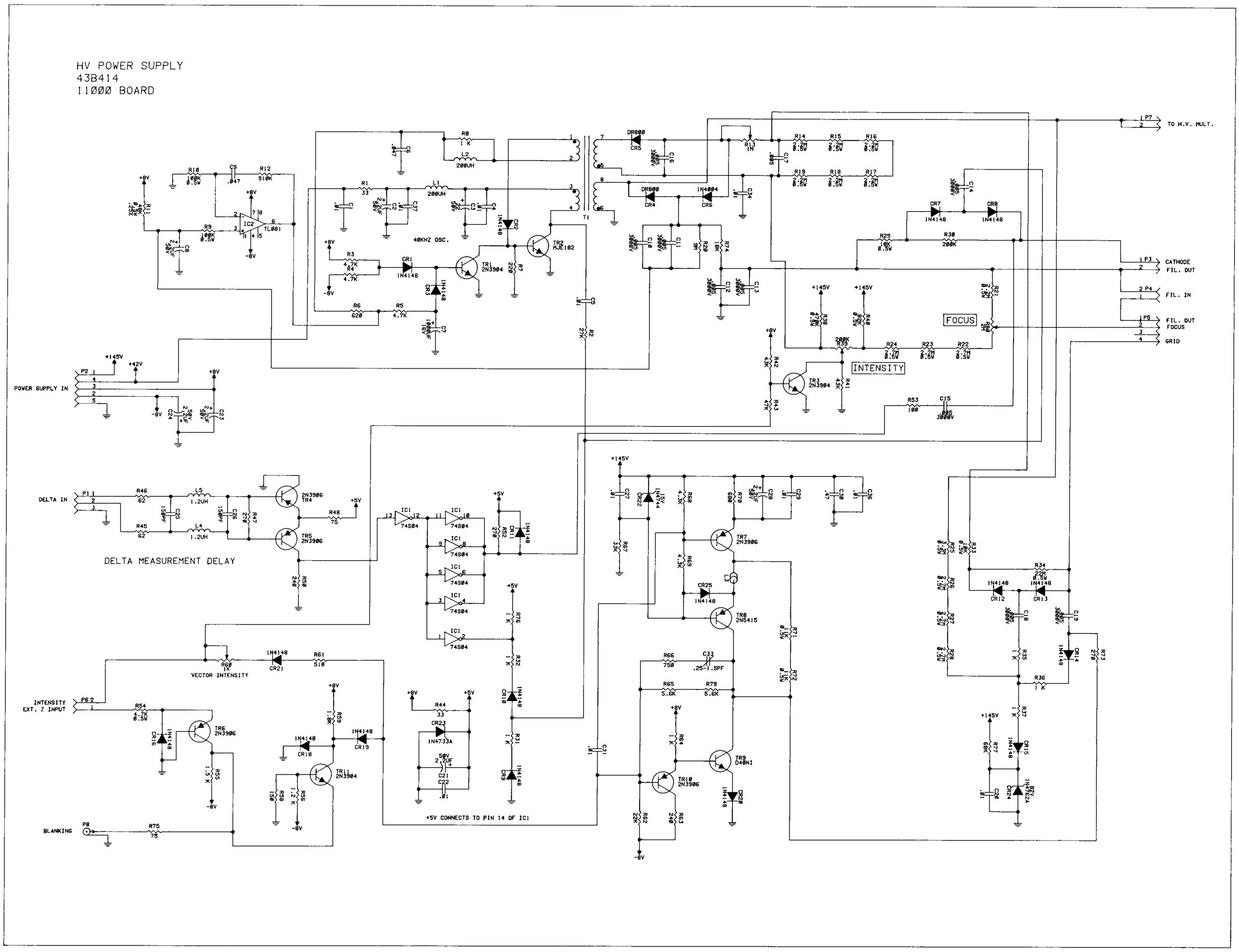

"11000" HIGH VOLTAGE POWER SUPPLY BOARD SCHEMATIC

DIGITAL CONTROL - SHEET NO. 1
43B402
7000 BOARD

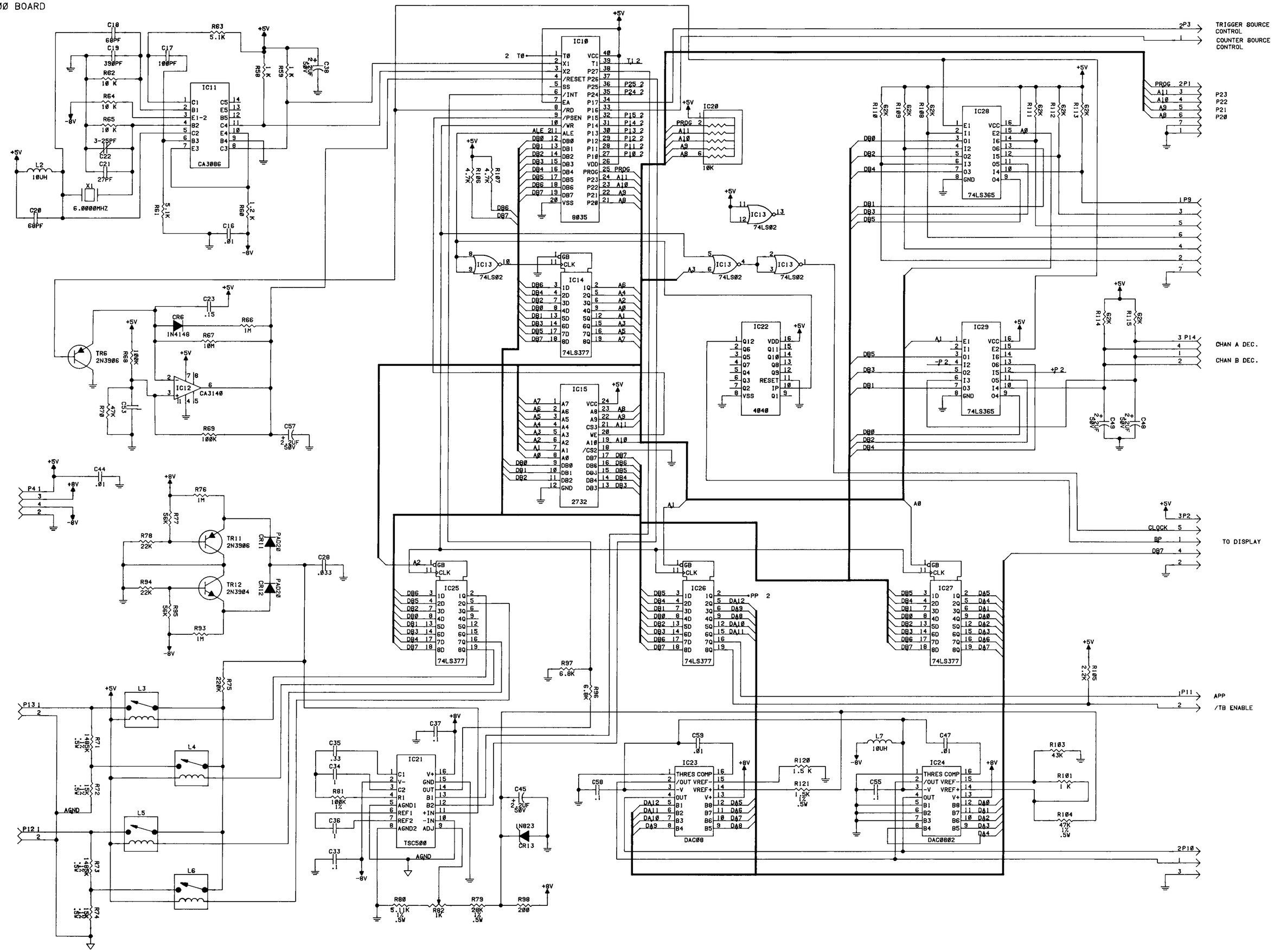

"7000" DIGITAL CONTROLLER BOARD SCHEMATIC
PART 1 OF 2

This sheet includes board numbers 7000.

SHEET 6

DIGITAL CONTROL - SHEET NO. 2
43B402
7000 BOARD

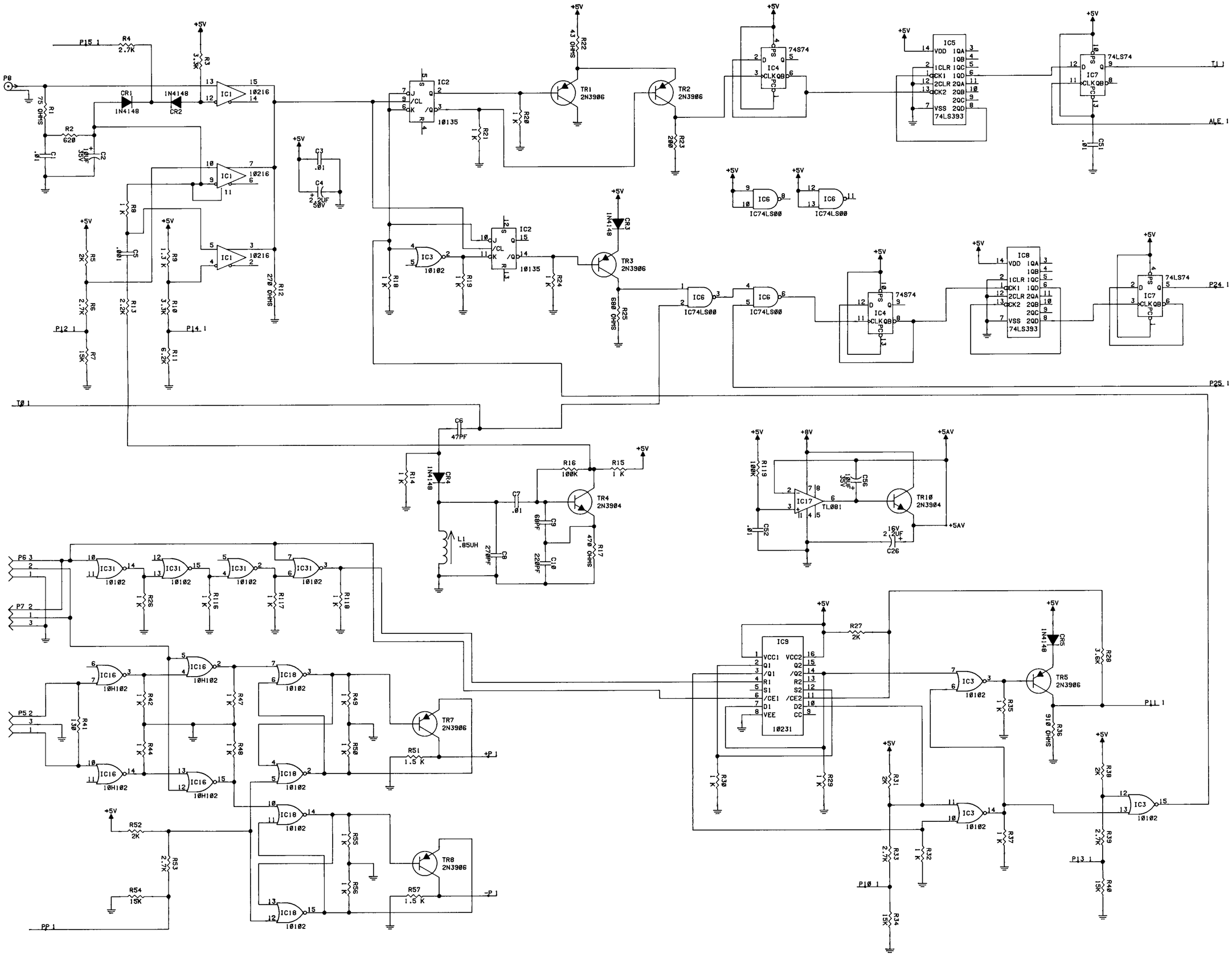

"7000" DIGITAL CONTROLLER BOARD SCHEMATIC
PART 2 OF 2