WAVETEK

Service Manual 4015 (1) ○

SERVICE MANUAL

STABILOCK® 4015

Communication Monitor

© 1994 Wavetek

This document contains information proprietary to Wavetek and is provided solely for instrument operation and maintenance. The information in this document may not be duplicated in any manner without the prior approval in writing from Wavetek GmbH.

Wavetek GmbH
Gutenbergstraße 2 – 4
D-85737 Ismaning, Germany
Tel.: +49 (89) 99 64 1-0
Fax: +49 (89) 99 64 1-160

Manual Revision 10/94
Manual Part Number 291 089
STABILOCK 4015
Series 889

CONTENTS

1 Codelist of Manufacturers

2 COMPLETE EQUIPMENT

3 FIXED UNITS

4 RF PLUG-IN UNITS

5 AF PLUG-IN UNITS

6 OPTIONS

CONTENTS

Chapter	Register	Volume		
1	A	1	Codelist of Manufacturers	
2	B	1	COMPLETE EQUIPMENT	108 901
3			FIXED UNITS	
3.1	CD	1	CONTROL PANEL	227 036
3.2	E	1	GRAPHIC DISPLAY	856 106
3.3	F	1	RF POWER PROTECTION	248 237
4			RF PLUG-IN UNITS	
4.1	G	1	RF UNIT	230 038
4.2	G	1	SYNTHESIS	213 038
5			AF PLUG-IN UNITS	
5.1	H	1	COMPUTER	250 036
5.2	IJ	1	DEMOD METER	229 036
5.3	K	1	MOD GEN	208 036
5.4	L	2	POWER SUPPLY	204 038
6			OPTIONS	
6.1	M	2	DUPLEX SYNTHESIS	229 038
6.2	M	2	DATA MODULE	236 016
6.3	M	2	DTMF MODULE	248 171
6.4	NO	2	IEEE BUS INTERFACE	236 013
6.5	NO	2	CENTRONICS INTERFACE	236 012
6.6	NO	2	ASCII KEYBOARD	248 192
6.7	PQ	2	EXT 10 MHz SYNC	214 026
6.8	R	2	INT BATTERY	205 006
6.9	S	2	SYMM AF TRANSFORMER	248 194

Chapter	Designation		Drawing No.
2	COMPLETE EQUIPMENT		
	Functional description		108 901 F
	Block diagram		108 901 B
	Total unit (dimensions and weight)		108 901
	Circuit diagram - Cable layout of subunits		201 238 S
	Assembly Drawing subunits and casework		201 238
	Assembly Drawing cables, display, loudspeaker		202 238
	Functional description	Motherboard	361 137 F
	Circuit diagram	Motherboard	361 137 S
	Components layout	Motherboard	361 137
	Circuit diagram	Filterboard	361 552 S
	Components layout	Filterboard	361 552
	Electrical parts list		201 238 Sa 361 137 Sa 361 552 Sa

Chapter	Designation		Drawing No.
3	FIXED UNITS		
3.1	CONTROL PANEL		
	Functional description + Troubleshooting		227 036 F
	Circuit diagram		227 036 S
	Assembly Drawing		227 036
	Electrical parts list		227 036 Sa
	Circuit diagram	Control Panel	361 521 S
	Components layout	Control Panel	361 521 Page 2
	Electrical parts list	Control Panel	361 521 Sa
3.2	GRAPHIC DISPLAY (from Finlux)		
	Functional description		856 106 F
3.3	RF POWER PROTECTION		
	Functional description		248 237 F
	Alignment procedure		248 237 A
	Assembly Drawing		375 335
	Circuit diagram		248 237 S
			361 560 S
	Components layout		361 560
	Electrical parts list		248 237 Sa
			361 560 Sa

Chapter	Designation		Drawing No.
4	RF PLUG-IN UNITS		
4.1	RF UNIT		
	Functional description		230 038 F
	Alignment procedure		230 038 A
	Circuit diagram		230 038 S
	Assembly Drawing		230 038
	Assembly Drawing		375 332
	Electrical parts list		230 038 Sa
	Circuit diagram	RF Unit	361 532 S
	Components layout	RF Unit	361 532 Bl.2
	Electrical parts list	RF Unit	361 532 Sa
	Circuit diagram	Attenuator	361 561 S
	Components layout	Attenuator	361 561
	Electrical parts list	Attenuator	361 561 Sa
	Circuit diagram	410 MHz-Oszillator	361 562 S
	Components layout	410 MHz-Oszillator	361 562
	Electrical parts list	410 MHz-Oszillator	361 562 Sa
	Circuit diagram	RF Control	361 563 S
	Components layout	RF Control	361 563
	Electrical parts list	RF Control	361 563 Sa
	Circuit diagram	Power Splitter	361 564 S
	Components layout	Power Splitter	361 564
	Electrical parts list	Power Splitter	361 564 Sa
	Circuit diagram	TX Mixer	361 566 S
	Components layout	TX Mixer	361 566
	Electrical parts list	TX Mixer	361 566 Sa

Chapter	Designation		Drawing No.
4.2	SYNTHESIS		
	Functional description		213 038 F
	Alignment procedure		213 038 A
	Circuit diagram		213 038 S
	Assembly Drawing		213 038
	Assembly Drawing		375 331
	Electrical parts list		213 038 Sa
	Circuit diagram	Synthesis	361 531 S
	Components layout	Synthesis	361 531 Page 2
	Electrical parts list	Synthesis	361 531 Sa
	Functional description		361 565 F
	Circuit diagram	Oszillator	361 565 S
	Components layout	Oszillator	361 565
	Electrical parts list	Oszillator	361 565 Sa

Chapter	Designation		Drawing No.
5	AF PLUG-IN UNITS		
5.1	COMPUTER		
	Functional description + Troubleshooting		250 036 F
	Circuit diagram		250 036 S
	Electrical parts list		250 036 Sa
	Circuit diagram	Computer	361 546 S
	Components layout	Computer	361 546 Page 2
	Electrical parts list	Computer	361 546 Sa
5.2	DEMOD METER		
	Functional description		229 036 F
	Alignment procedure		229 036 A
	Circuit diagram		229 036 S
	Electrical parts list		229 036 Sa
	Circuit diagram	Demod Meter	361 548 S
	Components layout	Demod Meter	361 548 Page 2
	Electrical parts list	Demod Meter	361 548 Sa
5.3	MOD GEN		
	Functional description		208 036 F
	Alignment procedure		208 036 A
	Circuit diagram		208 036 S
	Electrical parts list		208 036 Sa
	Circuit diagram	Mod Gen	361 545 S
	Components layout	Mod Gen	361 545 Page 2
	Electrical parts list	Mod Gen	361 545 Sa
5.4	POWER SUPPLY (from MGV)		
	Functional description + Test instructions		204 038 F
	Circuit diagram		204 038 S
	Assembly Drawing		204 038
	Electrical parts list		204 038 Sa

Chapter	Designation		Drawing No.
6	OPTIONS		
6.1	DUPLEX SYNTHESIS		
	Functional description		229 038 F
	Alignment procedure		229 038 A
	Circuit diagram		229 038 S
	Assembly Drawing		229 038
	Assembly Drawing		375 333
	Electrical parts list		229 038 Sa
	Circuit diagram	Duplex	361 533 S
	Components layout	Duplex	361 533 Page 2
	Electrical parts list	Duplex	361 533 Sa
	Documentation for the oscillator: see Chapter 4.2, SYNTHESIS		
6.2	DATA MODULE		
	Functional description + Troubleshooting		236 016 F
	Circuit diagram		236 016 S
	Electrical parts list		236 016 Sa
	Circuit diagram	Data Modul	361 543 S
	Components layout	Data Modul	361 543 Page 2
	Electrical parts list	Data Modul	361 543 Sa
6.3	DTMF MODULE		
	Functional description		248 171 F
	Alignment procedure		248 171 A
	Circuit diagram		248 171 S
	Components layout		248 171
	Electrical parts list		248 171 Sa

Chapter	Designation		Drawing No.
6.4	IEEE BUS INTERFACE		
	Functional description + Troubleshooting		236 013 F
	Circuit diagram		236 013 S
	Assembly Drawing		236 013
	Electrical parts list		236 013 Sa
	Circuit diagram	IEEE Bus Interface	361 551 S
	Components layout	IEEE Bus Interface	361 551
	Electrical parts list	IEEE Bus Interface	361 551 Sa
6.5	CENTRONICS INTERFACE		
	Functional description + Troubleshooting		236 012 F
	Circuit diagram		236 012 S
	Assembly Drawing		236 012
	Electrical parts list		236 012 Sa
	Circuit diagram	Centronics Interface	361 554 S
	Components layout	Centronics Interface	361 554
	Electrical parts list	Centronics Interface	361 554 Sa
6.6	ASCII KEYBOARD		
	Circuit diagram		248 192 S
	Overall view		248 192
6.7	EXT 10 MHz SYNC		
	Functional description		214 026 F
	Alignment procedure		214 026 A
	Circuit diagram		214 026 S
	Assembly Drawing		214 026
	Electrical parts list		214 026 Sa
	Circuit diagram	Ext. 10 MHz Sync	361 553 S
	Components layout	Ext. 10 MHz Sync	361 553
	Electrical parts list	Ext. 10 MHz Sync	361 553 Sa

Chapter	Designation	Drawing No.
6.8	INT BATTERY	
	Functional description	205 006 F
	Test instructions	205 006 A
	Circuit diagram	205 006 S
	Assembly Drawing	205 006
	Electrical parts list	205 006 Sa
6.9	SYMM AF TRANSFORMER	
	Functional description	248 194 F
	Test instructions	248 194 A
	Circuit diagram	248 194 S
		361 559 S
	Assembly Drawing	375 334
	Components layout	248 194
		361 559
	Electrical parts list	248 194 Sa
		361 559 Sa

Manufacturers / Suppliers and Codes

Date: 24.05.95

Manufacturer / Supplier	Code / Shortform
ADAPT ELECTRONIC	ADAP
ADVANCED MICRO DEVIC	AMD
AEG	AEG
ALAN INDUSTRIES	ALAN
ALBRECHT	ALB
ALLEN-BRADLEY	AB
ALPHA INDUSTRIES	ALPA
ALTERA	ALT
AMP INCORPORATED/USA	AMP
AMPHENOL-TUCHEL ELEC	AMPH
AMTEL	AMT
ANALOG DEVICES INC.	AD
ANSLEY	ANS
ANZAC	ANZ
ARCOTRONICS	ARC
ARIES ELECTRONICS	ARIE
ASSMANN	ASSM
ATLANTIC ELECTRONIC	AE
ATMEL	ATM
AUGAT	AUG
AUTOPIN	AP
AUTRON	AUTR
AVANTEC	AVAN
BECKMANN	BECK
BELDEN-ELECTRONICS	BELD
BERG-ELEKTRONIK	BGE
BEYSCHLAG	BEY
BINDER	BIND
BONN	BONN
BOSCH	BOSH
BOURNS	BURN
BOURROGHS	BOUR
BÜRKLIN	BUER
BURR BROWN	BB
BUSTER	BUS
C & K	C&K
CAB	CAB
CANNON	CAN
CELDUC	CELD
CENTRALAB	CLAB
CHERRY	CERY
CIRCUIT ASSEMBLY	CIAS
CIRCUIT ASSEMBLY CRP	CAC
COILCRAFT	COIL
COMATEL	COM
COMPONEC	COMP
CONEC	CON
CONTRAVES	CONT
CONTROLWARE	COW
CORCOM	CORC
CTS KNIGHTS INC.	CTS
CYPRESS SEMICON	CYPR
DALE	DALE
DALLAS SEMICONDUCTOR	DSC
DATA DELAY DEVICES	DDD
DATAMODUL	DATA
DAUT & RIETZ	D+R

DEDAKTA	DED
DELEVAN	DELE
DETECON DEUTSCHLAND	DECO
DEUTSCHE ELCO GMBH	ELCO
DIELECTRA	DIEL
DIGISOUND	DGS
DIGITAL EQUIPMENT	DEC
DRALORIC	DRAL
DUNKER	DUNK
E.H.W.	EHW
EBB	EBB
EBERLE	EBER
ECAM (DISTRIB. SASCO)	ECAM
EDAK	EDAK
EL.COMPONENTS +INST.	ECI
ELEKTRO BAUELEMENTE	EBE
ELEKTRONIC GMBH	ELEC
ELFEIN	ELF
ELMA ELEKTRONIC	ELMA
ELOMAC	ELM
ELOMAC ELEKTRONIK	ELO
EMC TECHNOLOGIE	EMC
ENDRICH	ENDR
ERIE	ERIE
ERNI	ERNI
ETTINGER	ETT
EUROTEC	EURO
EVOX	EVOX
FAIRCHILD (NEW="NS")	FAIR
FAULHABER	FAUL
FCT ELECTRONIC GMBH	FCT
FELLNER	FELL
FEI MICROWAVE	FEI
FERROPERM	FER
FINLUX	FIN
FISCHER ELEKTRONIK	FISH
FRAKO	FRAK
FREQUENCY SOURCES	FRSO
FROETHERM	FROE
FUJI	FUJI
FUJITSU	FJTS
FRONTIER	FRT
GARDNERS XFORMERS LT	GARD
GARRY	GARR
GENERAL ELECTRIC	GE
GENERAL INSTRUMENTS	GI
GOSSEN	GOSS
GOWANDA	GOW
GROTE & HERMANN	G+H
GRUNDMANN	GRU
GTE MICROCIRCUITS	GTE
GUENTHER	GUEN
GUMMI MENZEL	GUM
HAMLIN	HAM
HARRIS	HAR
HARTING	HART
HARTMANN	HARM
HARTMANN & BRAUN	H+B
HELEKTRA	HELE
HELLERMANN	HELL
HEWLETT PACKARD	HP
HIRSCHMANN	HIR
HITACHI	HIT
HOLZINGER	HOLZ
HUGES	HUG
HYUNDAI	HYI
IMS MORAT SOEHNE	IMS

INDEG	IND
INGLFINGER	ING
INTEGRATED DEVIC.TEC	IDT
INTEL	INT
INTERMETALL	ITT
INTERSIL	INTE
ISOPHON	ISO
JAHRE	JAHR
JAUCH	JAUC
JAUTZ	HAUT
JEANRENAUD	JEAN
JEFFERSON	JEFF
JERMYN	JERM
JFW INDUSTRIES, INC.	JFW
JOHANSON	JOHA
JRC O. NJRC	JRC
K.OELSCH KG (FERNST)	FERN
KIENZLE	KIE
KINSEKI EUROPA GMBH	KSS
KLAR & BLEISCHMIDT	K&B
KLASING	KLAS
KNITTER	KNIT
KOCH	KOCH
KORDES	KORD
KRISTALL-VERARBEIT.	KVG
KROMBERG U. SCHUBERT	KROM
LAMBDA	LAM
LATTICE	LAT
LEONISCHE DRAHTWERKE	LEON
LINEAR TECHNOLOGY	LTE
LOGIC DEVICES INC.	LDI
LSI-LOGIC	LSI
LUMBERG	LUM
MACHATE	MACH
M/A-COM	MAC
MACIM	MAX
MARQUARDT	MARQ
MATSUSHITA	MATS
MC COY	COY
MC MURDO INSTR.LTD.	MCMU
MECA SEE ECI	MECA
MEGATRON	MEGA
MEM MICROELCTRON.	MEM
MENTOR	MEN
MENZEL	MENZ
MIAL	MIAL
MICRO ASSOCIATES	MIC
MICRO POWER SYSTEMS	MICS
MICRON	MCR
MICROSYS GMBH	MICR
MILTON	MILT
MINI CIRCUITS LAB.	MCL
MINLEIT	MINL
MINNESOTA MINING MAN	3M
MINSANTO	MINS
MITEL	MITE
MITSUBISHI ELECTR.	MITS
MOLEX	MOLE
MOSEL	MOS
MOSTEK	MOST
MOTOROLA	MOT
MURATA	MUR
NAIS MATSUHITA AUTOC	NAIS
NARDEUX	NARD
NATIONAL INDUSTRIES	NI
NATIONAL SEMICONDUC.	NS
NEC	NEC

NEOSID	NEO
NEUBERGER	NEUB
NEUMÜLLER	NEU
NEUTRONIK	NEUT
NIEBLING	NIEB
NIPPON-CHEMIE-CON	NCC
NOISE COM	NOCO
ODU-KONTAKT	ODU
OHSINS	OHSI
OTTO HEIL OHG	HEIL
PANASONIC	PANA
PANDUIT	PAND
PHILIPS	PHIL
PICATRON	PIK
PLESSEY	PLES
PMI	PMI
POLYTRONIC GMBH	POLY
PHEH	PREH
QUARZKERAMIK	QUAK
QUARZTECHNIK	QUAT
RADIALL	RAD
RADIO CORP. OF AMERI	RCA
RAFI	RAFI
RAYTHEON	RAYT
RELCOM	RELC
RELIABILITY	REL
RESISTA	RES
RF MICRODEVICES	RFMIC
RHEINISCHE FEINDRAHT	REFE
RIACON	RIAC
ROBINSON & NUGENT	R&N
ROEDERSTEIN	ROED
ROHDE & SCHWARZ	R&S
ROSENBERGER	ROS
RUDOLF PACK GMBH +. CO.	RUPA
RUF OHG	RUF
RUHRTRAT	RUS
RUTRONIK	RUTR
RYAM	RYAM
SAFT	SAFT
SAMSUNG	SAM
SAMTEC	SAMT
SASCO	SASC
SASSE	SASS
SCHALTBAU	SCHB
SCHLUMBERGER ENGLAND	STGE
SCHLUMBERGER FRANCE	STGF
SCHLUMBERGER TECHNO.	STG
SCHLUMBERGER USA	STGA
SCHREIEROEDER	SREI
SCHROFF	SHRF
SCHURTER	SCHU
SCOTCH	SCOT
SDS	SDS
SEATRONICS	SEAT
SEE "AMPHENOL"	TUCH
SEE GUENTHER	HERM
SEIFERT	SEIF
SEIKO-EPSON	SEEP
SEL-KONTAKT-BAUELEM.	SEL
SEMICOND. CIRCUITS	SCI
SEMICRON	SEMI
SENNHEISER	SENN
SES NEUFAHRN	SES
SFERNICE	SFE
SGS-THOMSON	SGS
SIEMENS	SIE

SIGNETICS	SIG
SILICON GENERAL	SG
SILCONIC	SILI
SIPEX	SIP
SITEL-SIERRA	SITE
SIVERS LAB.	SIV
SOCAPEX	SOCA
SONNENSCHEIN	SOMM
SOURIAN	SOUR
SPEZIAL ELEKTRONIK	SE
SPINNER	SPIN
SPRAGUE	SPRA
STANDARD GRISBY	STGR
STD.TEL.A.CABLES LTD.	STC
STETTNER	STET
STOCKO	STO
SUHNER	SUHN
SYNERGY	SYNE
SYNERTEK	SYN
TAISEI	TAI
TECKENTRUP	TECK
TEKELEC	TEKE
TEKTRONIX	TEK
TELCOM	TELC
TELEDYNE	TEDY
TELEFUNKEN	TELE
TELEQUARZ	TEQU
TELINDUS	TELI
TEXAS INSTRUMENTS	TI
THOMAS & BETTS	T&B
THOMSON	THOM
THOMSON CSF	CSF
TOSHIBA	TOSH
TOYOCOM	TOYO
TRAUB	TRA
TRONSER	TRON
TU-MUENCHEN	TU-M
UNVERDROSS	UNV
VACUUMSCHMELZE	VAC
VAKUUMTECHNIK	VATE
VALVO	VAL
VARO	VARO
VARTA	WAR
VERP. U. TRANSPORT GMBH	VTT
VIDEON	VID
VITRAMON	VITR
VITROHM	VIT
VOGT	VOGT
WAKEFIELD	WAKE
WANDEL & GOLTERMANN	W+G
WATKINS-JONSON	WJ
WAVETEK	WVT
WEIDMUELLER	WEID
WEIGAND	WEIG
WINSCHEL	WEIN
WESTON INSTRUMENTS	WEST
WICKMANN	WICK
WIDMAIER	WIDM
WILHEM WESTERMANN	WIMA
WORK (WIESHOFER)	WORK
WUSTLICH OPTOELEKTR.	WUST
XICOR	XICO
ZILOG	ZIL
Z-COMMUNICATIONS	ZCOM

OVERVIEW OF BOARDS

In the left half of the block diagram 108 901 B are the RF boards RF UNIT, SYNTHESIZER and DUPLEX (option). In the right half of the block diagram are the boards MOD GEN, DEMOD METER, COMPUTER, DATA MODULE (option), the POWER SUPPLY and the external options EXTERN SYNCHRON and IEEE INTERFACE or CENTRONICS INTERFACE. Also in the right half are the connecting boards MOTHERBOARD and FILTER BOARD. For more details, refer to the functional descriptions of the boards.

SYNTHESIS

Frequency synthesizer

The 100-Hz decade and the 5-MHz decade are combined in the adder PLL (phase-locked loop) to produce an output frequency between 500 and 1000 MHz. Frequency dividers extend this range to between 125 and 1000 MHz. Down-conversion with 410 MHz in the RF Unit produces output frequencies from 125 MHz down to 0.4 MHz.

Duplex synthesizer (option)

The duplex stage only produces the local-oscillator (LO) frequency for transmitter tests if the synthesizer for receiver tests is required at the same time.

The duplex circuit differs from the other synthesizer through the extended frequency divider at the output and the lack of FM modulation and the sweep function.

20-MHz crystal reference

The temperature-compensated crystal oscillator (TCXO) in the RF Unit requires no warmup after powering on. This is the frequency reference for the synthesizer, duplex, 1-kHz generator and computer (modulation generator A and the Data Module have a separate reference frequency).

- Acting as a calibration generator it produces a substitute TX signal for calibration and selfcheck.

In the external synchronization (option) the internal 20-MHz crystal frequency is synchronized with an external 10-MHz reference by a very slow PLL.

Synthesized sweep for spectrum analyzer

The sweep generator drives the unsynchronized oscillator of the 100-Hz decade, whose divided output frequency is counted by the computer. At the end of the sweep range the computer triggers a new sweep with "Up/Down". The sweep rate depends on the set sweep width and the synthesizer frequency divider at the output. It is controlled by the DC voltage on "RXAM".

RECEIVER TESTS

Output level

The rectified RX level is controlled over a dynamic range of at least 16 dB according to the rectified AM modulator signal. The 10-dB-graded attenuator damps the RX signal by 0 to 50 dB. This electronic attenuator also switches fast enough for squelch measurements.

For the RX/TX socket there is extra fixed attenuation to reduce the output level by 60 dB to between -60 and -130 dBm.

On the RXhigh socket there is - in part amplified - an output level of -70 to +13 dBm.

AM modulation

An (AM) AC voltage is superimposed on the (RX level) DC voltage. This sum signal is attenuated by a D/A converter in the modulation generator as a function of the level setting and fed to the output-level control.

FM modulation

The FM modulator in the synthesizer consists of a tunable crystal oscillator that is synchronized by a very slow PLL for FM-AC. For FM-DC the synchronization is disabled.

The FM modulation signal is produced by the modulation generator. Before the FM modulator the amplitude is increased by a factor of x1, x2 or x4 to compensate for the FM reduction in the frequency divider on the synthesizer output. The polarity is switched for the down-conversion range of < 125 MHz.

In the 5-MHz decade the FM deviation is divided differently in each 5-MHz band. The corresponding alteration of the FM deviation is compensated automatically in the level of the modulation generator.

ΦM modulation

The preemphasis alters the FM signal amplitude as a function of modulation frequency. At twice the modulation frequency the amplitude is halved. At 1 kHz the level is the same for FM and ΦM. Below 300 Hz the level is reduced by a highpass filter.

TRANSMITTER TESTS

Signal path

In transmitter tests the 4015 works as a test receiver. High TX levels on the RX/TX socket or small TX levels on the TX SENS socket are applied via fixed attenuators or amplifiers to the RF input of the TX mixer. The LO signal from the synthesizer or duplex stage mixes the TX signal down to IF frequency. The IF level is matched to the following demodulators, etc by n x 10 dB amplifiers or attenuators.

Frequency measurement

If the level on the RX/TX socket is high enough, the computer can count independently of the test receiver via frequency dividers. This means that automatic frequency tuning is possible. At low levels the transmitter frequency is calculated from the counted IF frequency and the set synthesizer or duplex frequency.

FM demodulation

Depending on the FM modulation spectrum that is to be measured, one of three different IF filters can be connected ahead of the FM demodulator.

ΦM demodulation

The deemphasis alters the amplitude of the FM demodulation as a function of the modulation frequency. If the modulation frequency is doubled, the amplitude is also doubled. At 1 kHz the level is the same for FM and ΦM.

AM demodulation

A linear peak-responding IF rectifier works as the AM demodulator. The measured value - even for distorted modulation through appropriate evaluation - corresponds to the AM definition
(m = A-B/A+B).

Transmitter-power measurement

The demodulated AM signal is also used for measuring power. For this reason the test receiver is linear throughout, from the RF signal through the IF and AM demodulation to the A/D converter. A 30-Hz lowpass rejects any residual AM.

Spectrum analyzer

After the TX mixer the signal path is different from that of normal transmitter testing. The IF is no longer 450 kHz but approx. 0 to 10 kHz instead. Level measurement is as in AF decoding. The "IF bandwidth" corresponds to double the bandwidth of the programmable lowpass filter of 1 to 10 kHz. This is matched to the set sweep width (for sweep, see Synthesizer).

AF GENERATORS

There are five different signal sources:

1. Variable modulation generator A
2. Data Module (option) for digital data modulation, or as modulation generator B
3. DTMF Coder (option) only in place of the Data Module
4. 1-kHz modulation generator C
5. External modulation input only in place of the 1-kHz modulation generator

A maximum of three signals can be superimposed as an internal or external modulation signal. In duplex mode internal and external modulation signals are available simultaneously.

In as much as it is practical for an application, DC coupling is possible.

AF DECODING

Signal path

According to the application, every signal that is to be measured is applied to the A/D converter via switches, multiplexer, AC/DC switchover, filters and switch-selected amplifiers in a continuously repeated test sequence. Only one signal can be measured at a time.

On the front panel there are also AF output attenuators and input amplifiers to prevent interference on the longer internal lines. The extra circuit paths on the modulation-generator board are only necessary for calibration.

Digital signal processing

The fast signal sampling in the A/D converter digitizes the test signal, which is evaluated by the digital signal-processing software of the computer. Thus, for example, no hardware notch filter is necessary for distortion measurement to suppress the fundamental because this fundamental is "calculated out" by the digital signal processing. Other traditional hardware functions like AF filter, rms rectifier, peak-responding rectifier are also managed by the digital signal processing.

To keep testing time short, the CCITT filter and a selectable lowpass filter are in the form of hardware.

Digital decoding (DTMF, DATA)

Incoming DTMF signals are decoded by the DTMF option largely independently of the computer.

The digital modulation signals for cellular and other radio networks are decoded in the Data Module (and also generated). Generation and decoding for sequential calling systems are performed independently of the Data Module in modulation generator A and frequency counters in the computer.

POWER SUPPLY, BATTERY

Depending on the line voltage that is applied, the switch-mode power supply automatically selects the appropriate voltage range. The secondary side is fed either from the primary side or from the internal or external battery. It produces the three internal supply voltages, the voltage of +15 V also being available with low load current as a reference voltage and without voltage losses in the entire set.

The charging of the internal battery works fully automatically even when the set is powered off but still connected to the line. Upon warming up of the internal battery at the end of charging with approx. 1 A, the power supply automatically switches to a trickle charge of approx. 0.1 A.

The speed of the fan is controlled by the RF Unit as a function of the internal temperature.

COMPUTER CONTROL

The computer includes a 68000 microprocessor with the necessary peripherals and memory. An extra multiplier accelerates DSP computations.

Front-panel operations are detected by the keyboard encoder. The LEDs on the front panel are driven by LED drivers. The display driver drives the electroluminescent display.

The control of the Data Module is by way of the serial ACIA interface.

The bidirectional system bus for controlling all boards consists of two PIAs (peripheral interface adapters).

Frequency measurements are relatively independent in time from the computer with timer devices.

A timer generates a frequency that determines the cutoff frequency of the programmable lowpass filter.

External interface options are controlled directly by the computer bus. In this way printers, radio sets, etc can be controlled on different interfaces. An external keyboard can be connected to generate AUTORUN programs.

CALIBRATION

Measuring accuracy is substantially improved by software correction and calibration. A distinction is made between once stored correction data and calibration that can be repeated at any time.

EEPROM correction

RF frequency-response flatness and level errors of the RF Unit are measured before equipment is shipped and stored in a nonvolatile memory (EEPROM) in the RF Unit. This means that the unit can be exchanged without sacrificing accuracy.

AF calibration

Level errors of the internal AF circuits are avoided by measurement and allowance for level deviations. For this purpose there are special internal test circuits (AF CAL).

TX/IF calibration

IF level, modulation and demodulation can be checked very precisely at any time with the 20-MHz calibration signal (CAL Gen). In this way, even at extreme temperatures and when boards are exchanged, high measuring accuracy is achieved, eg for selective measurement of transmitter power, after the automatically run calibration procedure.

SELFCHECK

Automatically run selfchecks can test just about every internal function without external aids. In this way a defective board can be uniquely localized.

A number of extra circuits, like the test generator on the IF input and the selfcheck lines of level and frequency controls, enhance these possibilities further.

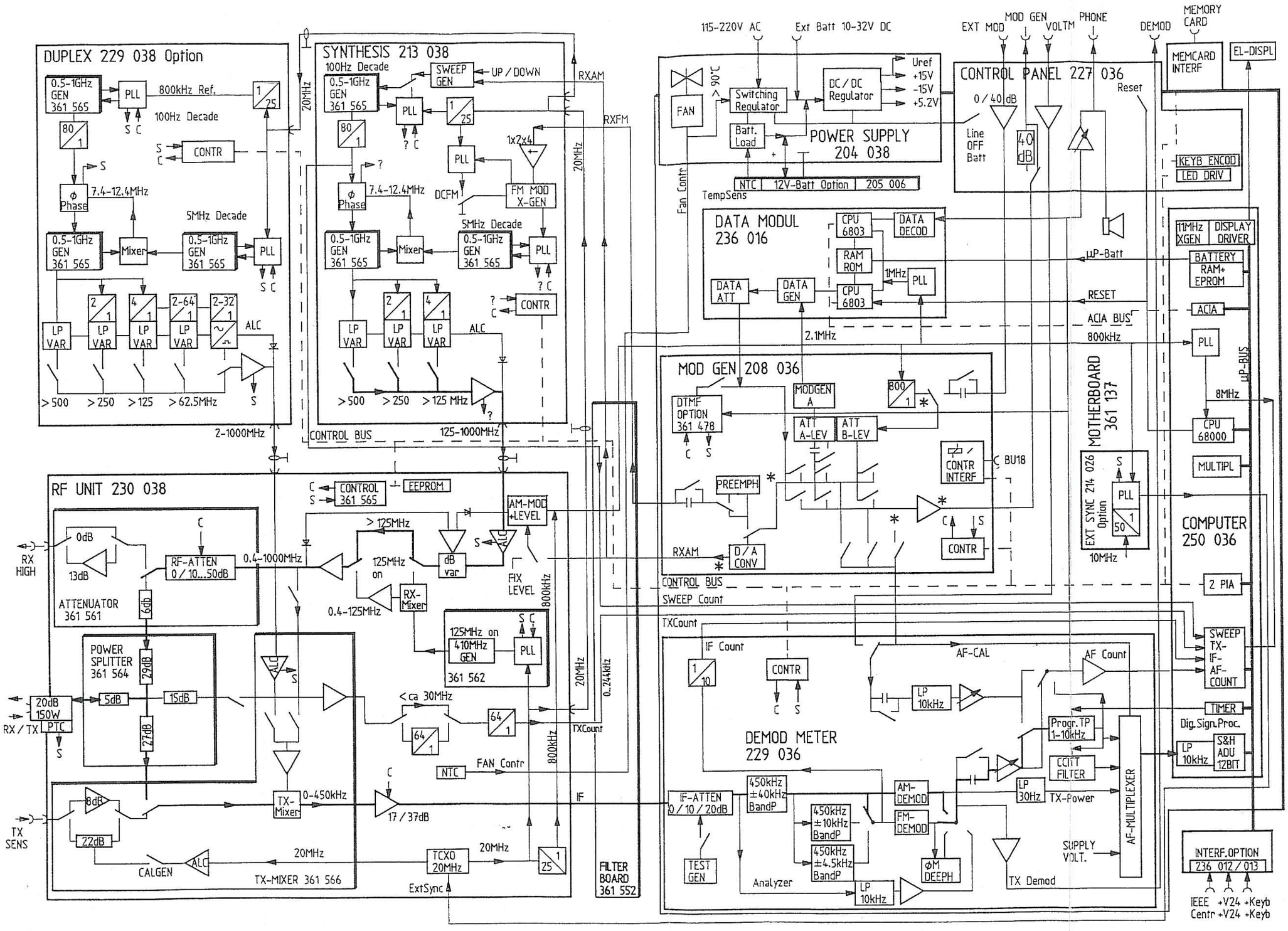

LEGEND

C = Controllines
S = Selfchecklines
* = Calibrale measurements

sw	BLACK	bl	BLUE
br	BROWN	vi	VIOLET
rt	RED	gr	GREY
rs	ROSE	ws	WHITE
ge	YELLOW	tr	TRANSPARENT
gn	GREEN		

					NORM.		
					GEPR.		
00	1089.17	26.03.91	H.W.	BEARB.	26.03.91	H.W.
INDEX ISS	Ä.-NR. MODIF.	DATUM DATE	NAME NAME		DATUM DATE	NAME NAME

SCHLUMBERGER TECHNOLOGIES GMBH
INGOLSTÄDTER STR. 67 A
8000 MÜNCHEN 46

BEZEICHNUNG / DESCRIPTION:
COMMUNICATION MONITOR
BLOCKDIAGRAM

ZEICHNUNGSNR. / DRAWING NO.: 108 901 B
1 VON / OF
PROJEKT / GROUP: 4015
BLATT SHEET

This drawing is the property of SCHLUMBERGER. Reproduction, unauthorized use, communication to a third party is liable to prosecution and liable for damages.
Diese Zeichnung ist unser Eigentum. Vervielfältigung, unbefugte Verwertung, Mitteilung an andere ist strafbar und schadenersatzpflichtig.
Designed with Mac BRAVO!
Makro

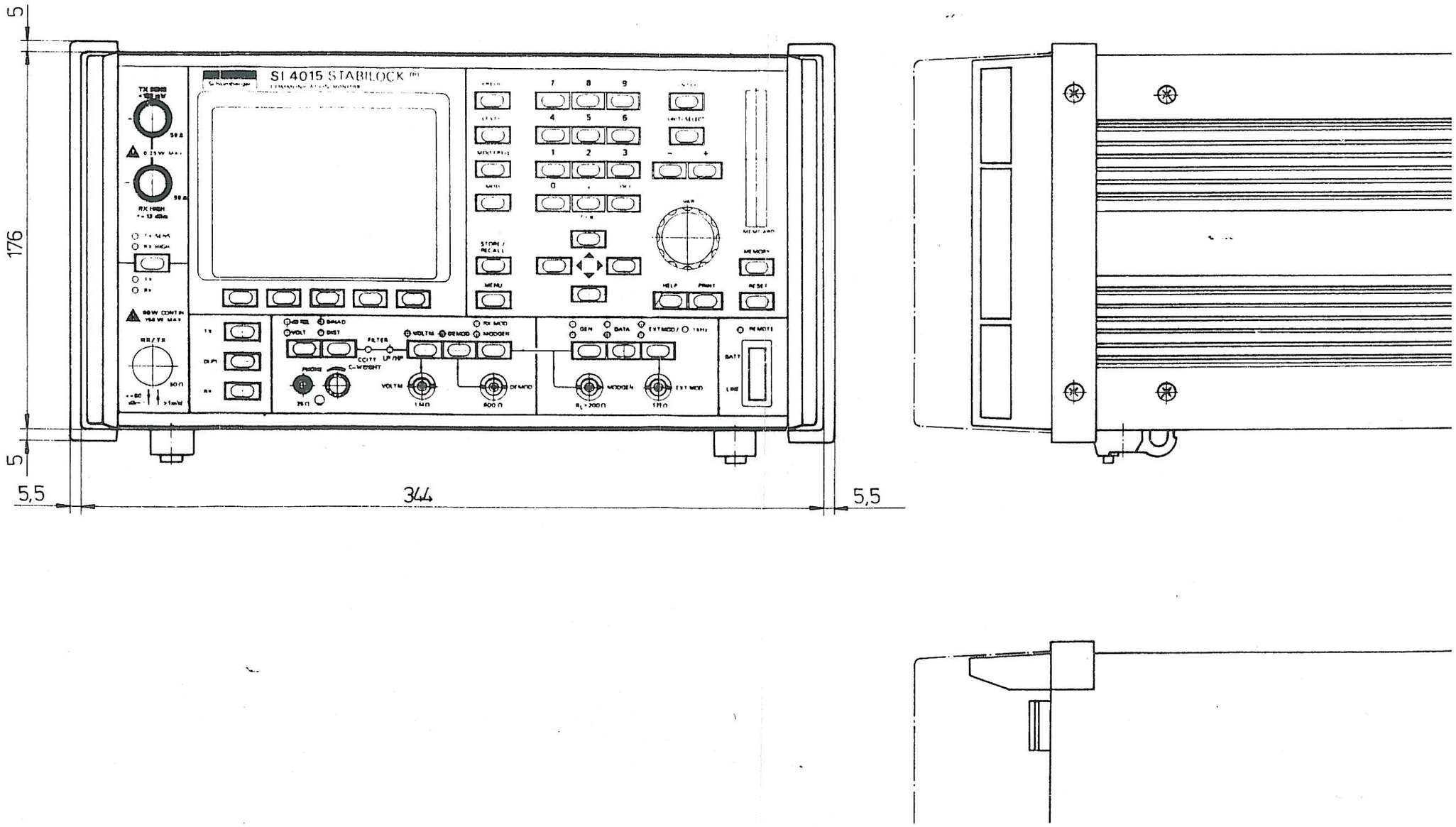

SI 4015 STABILOCK
5
176
5
5,5
344
5,5

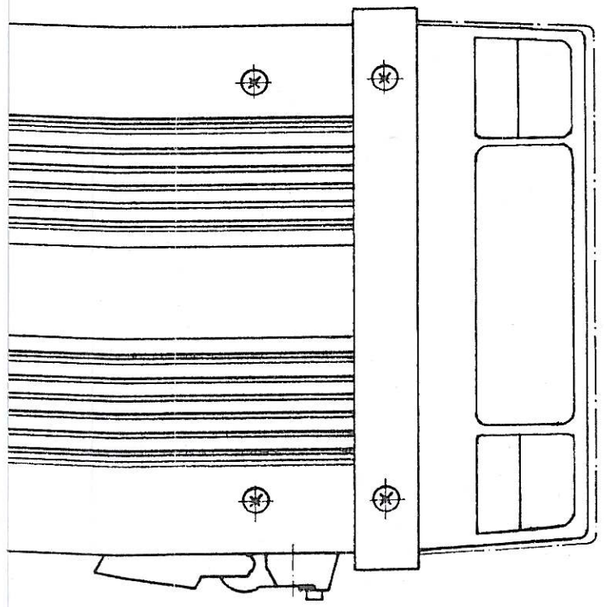

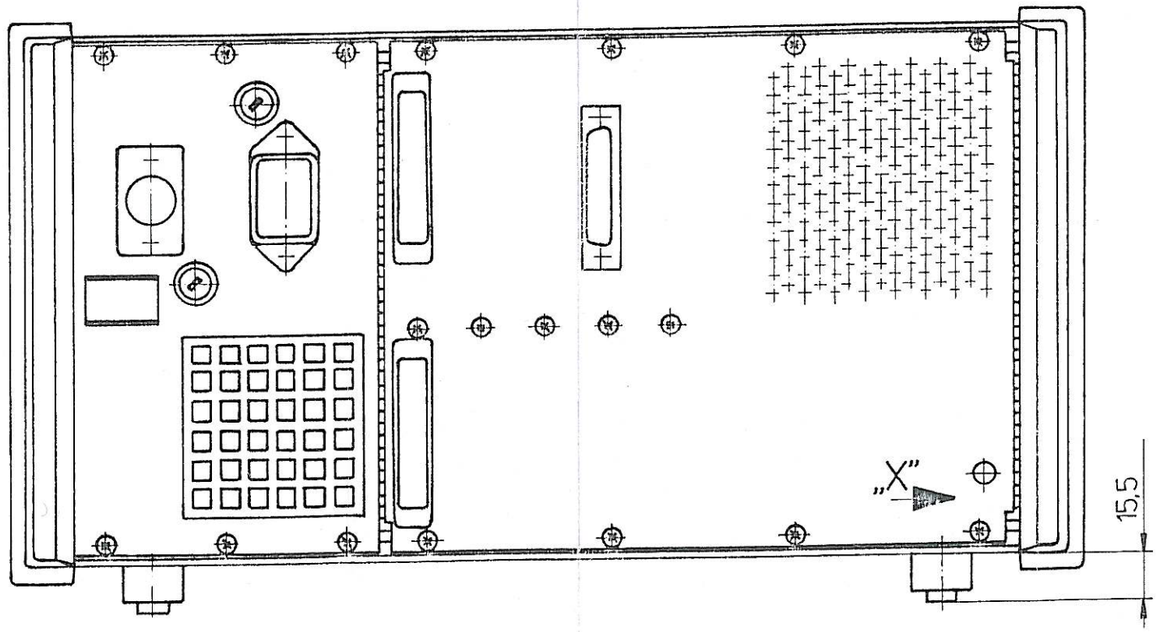

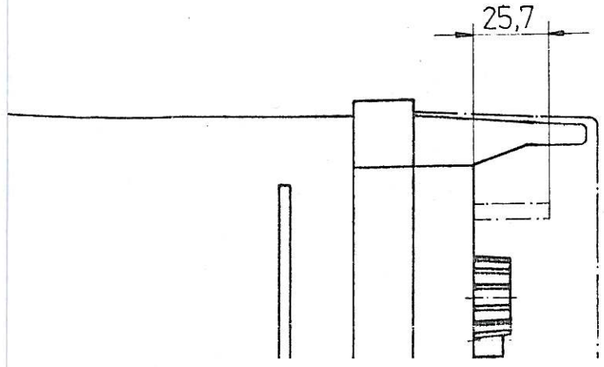

Ansicht „X" M1:1
ohne Rückwand 377 267

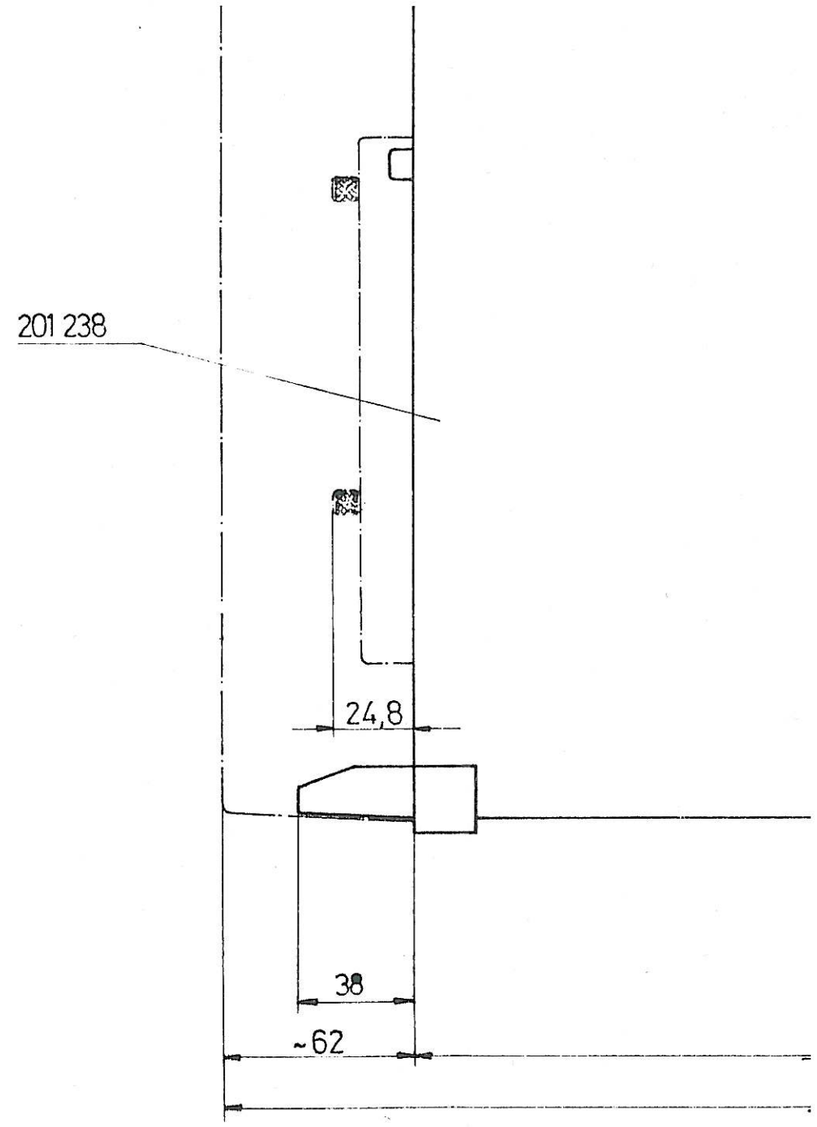

Schaltplanpositionierung ≙

13 12 11 10 9 8

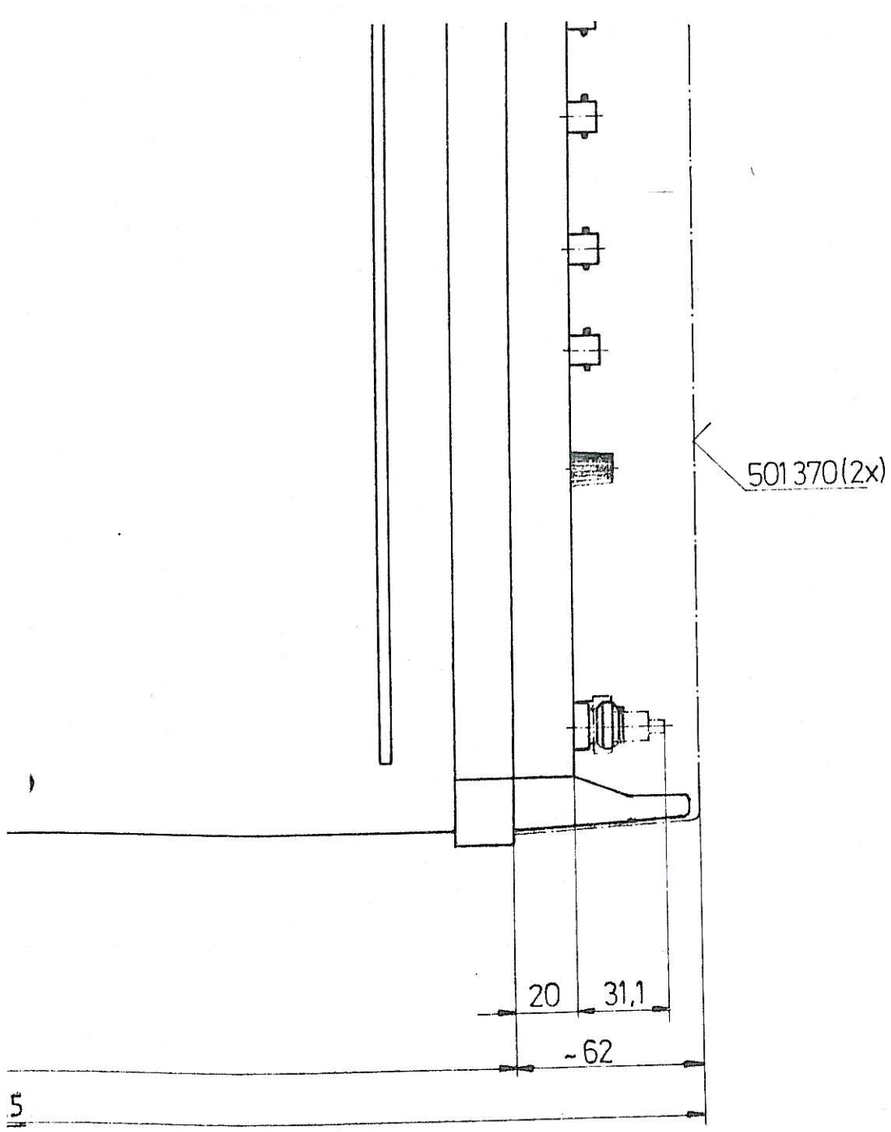

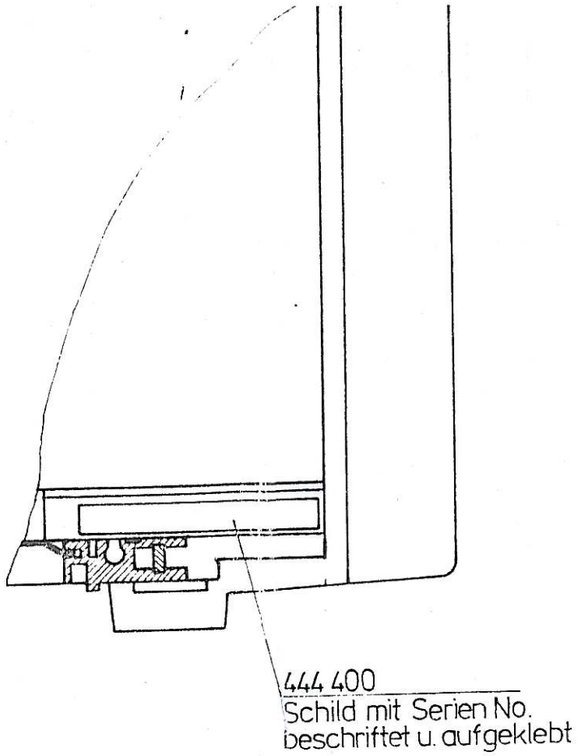

Gewicht < 10kg / mit Optionen ca. 12,5kg

09			
08			
07			
06			
05			
04	1089,44	12.6.91	Wi.
03	1089,35	15.5.91	Wi.
02	1089,8	24.1.91	Ha.
01	0089,63	8.11.90	Kr.
00	0089,59	12.10.90	
Ausgabe	Änderung	Datum	Name

Werkstoff

Oberfläche

'90	Datum	Name
gez.	27.9.	West
bearb.	12.10.	

1:2
(1 : 1)

Schlumberger Technologies GmbH
Ingolstädter Straße 67a
8000 München 46

Communication Monitor

108 901 B

4015

Diese Zeichnung ist unser Eigentum. Vervielfältigung unbefugte Verwertung, Mitteilung an andere ... ausgeführt

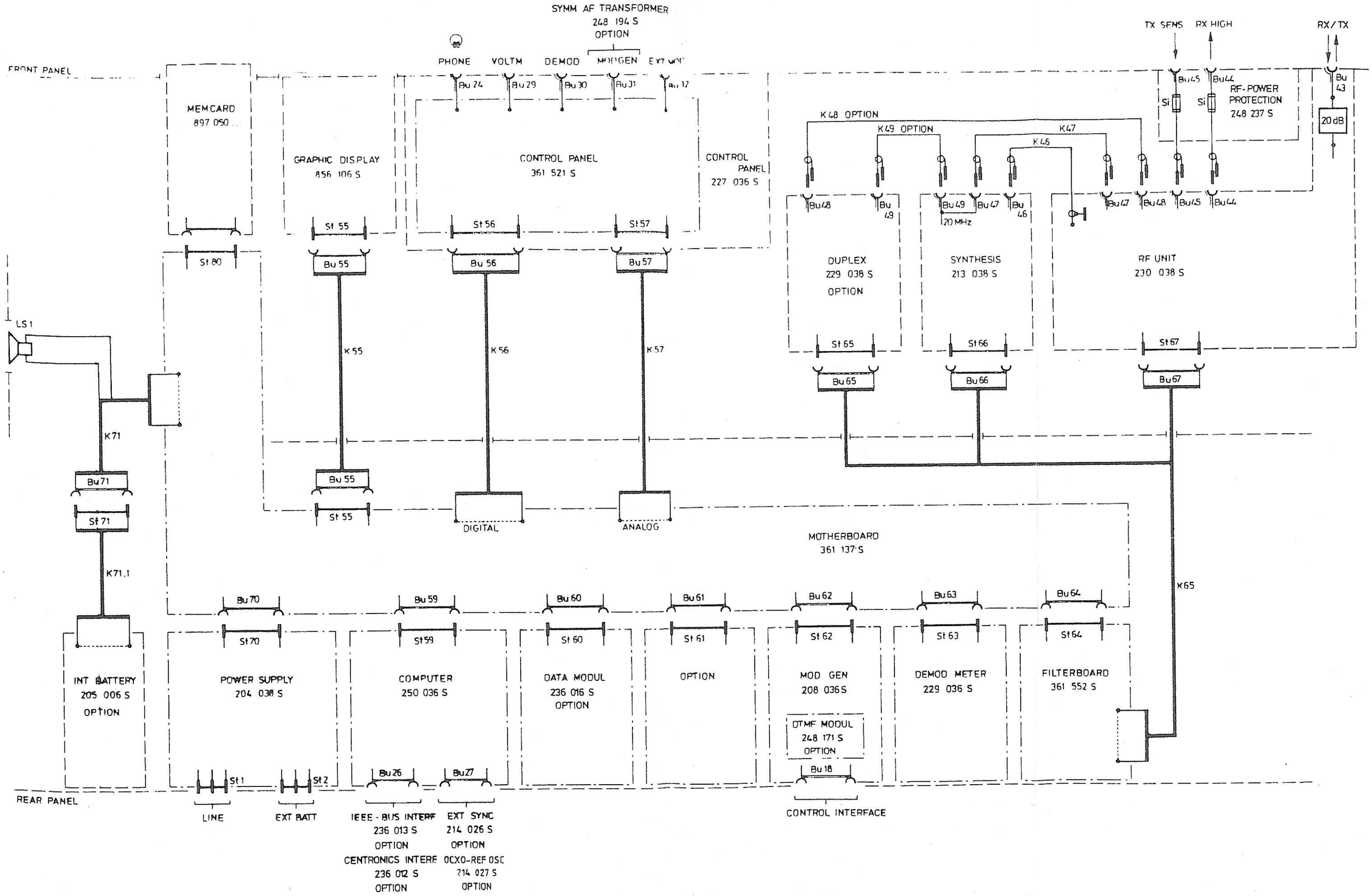

sw BLACK	bl BLUE				norm			Schlumberger Meßgeräte GmbH	COMMUNICATION MONITOR	201 238 S
br BROWN	vi VIOLET				gepr			Ingolstädter Straße 67 a		
rt RED	gr GREY	06	4089.14	18.10.94	WI.	bearb	12.10.90	KI.		Gerät: 4015
rs ROSE	ws WHITE	Ausg	Ä.-Mittlg	Datum	Name	1990	Datum	Name	8000 München 46	
ge YELLOW	lr TRANSPARENT	MS	MODIF	DATE	NAME		DATE	NAME		
gn GREEN										

Ansicht „X"
ohne Rückwand 377 267

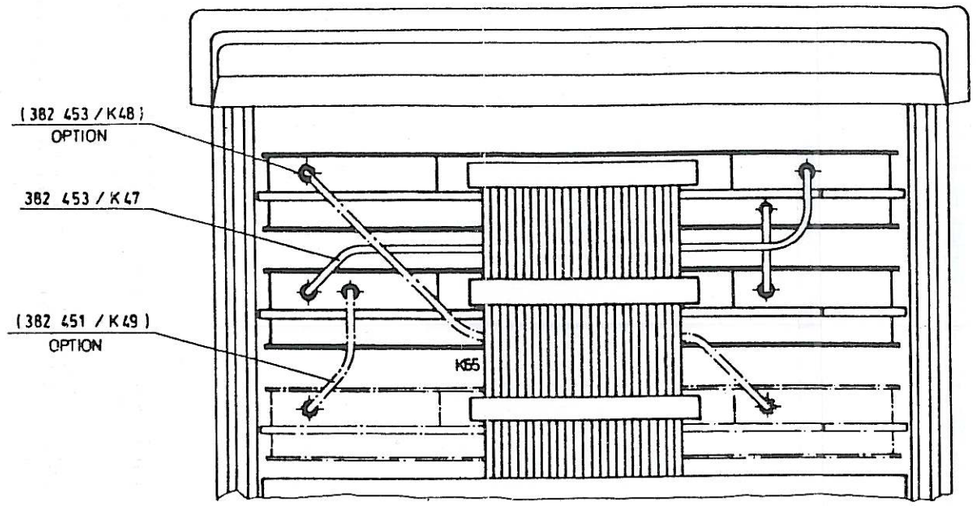

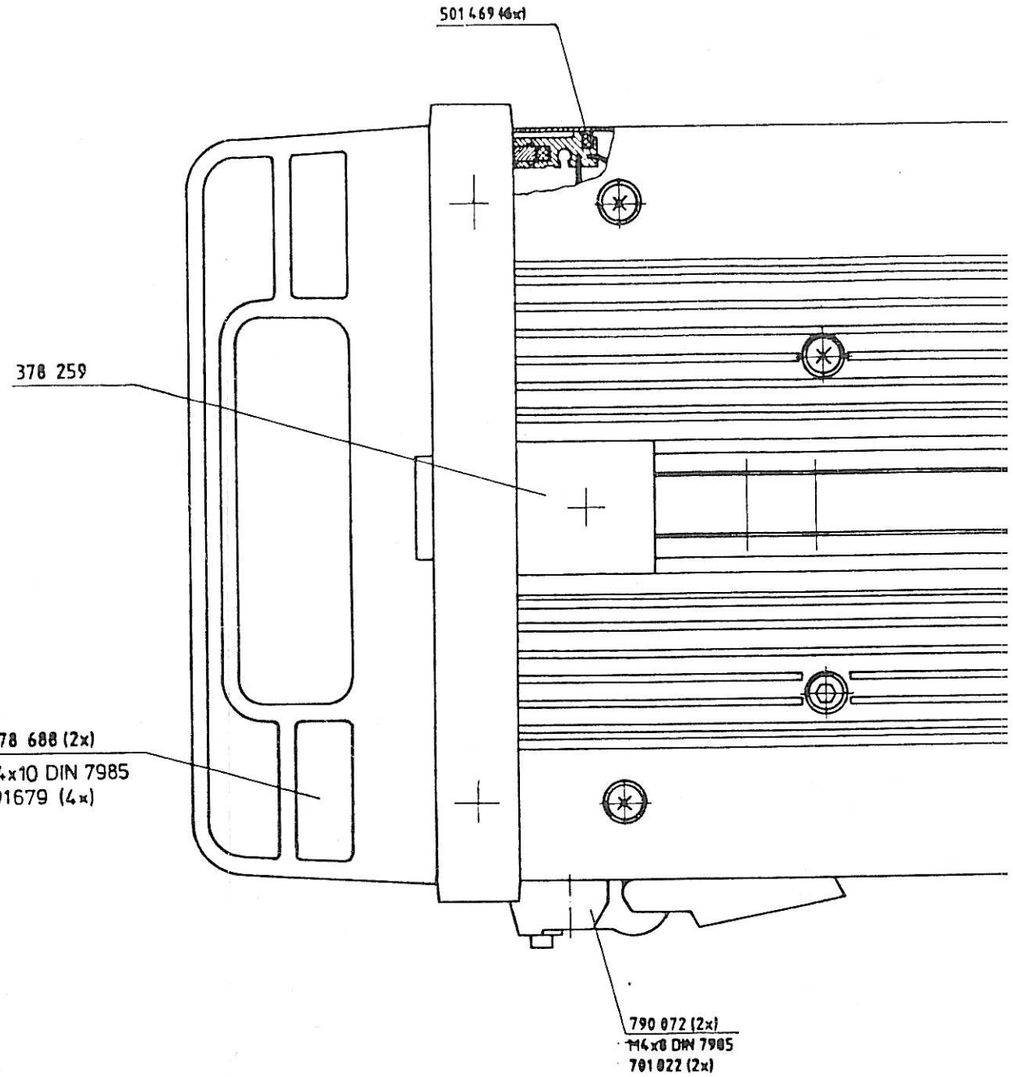

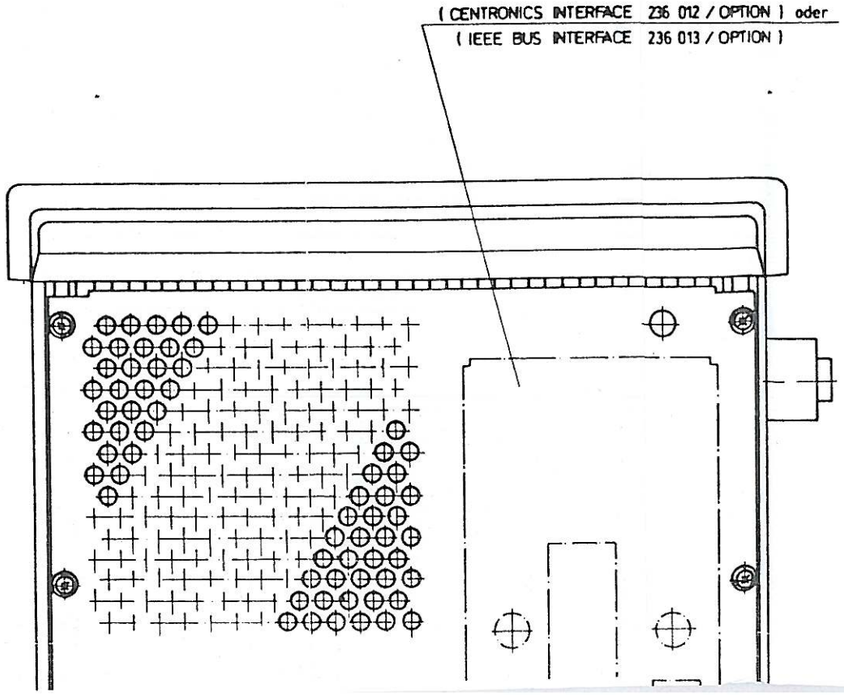

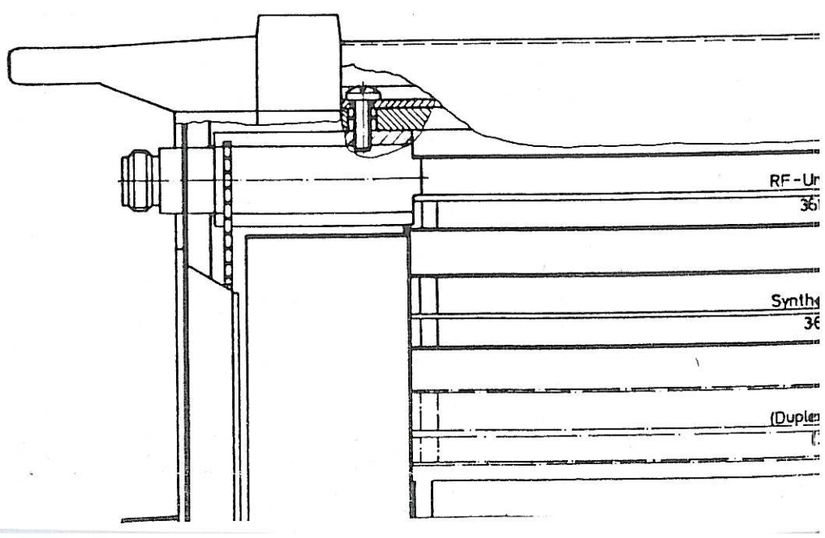

478 745
M4x8 DIN 7985
701 022 (4x)
M4
704 016 (4x)

478 687 (2x)
M4x10 DIN 7985
701 679 (4x)

378 267
M4
704 016 (4x)
M4x8 DIN 7985
701 022 (4x)

478 744

230 038
532

bis 213 038
531

229 038 OPTION)
bis 533)

K65

„X"

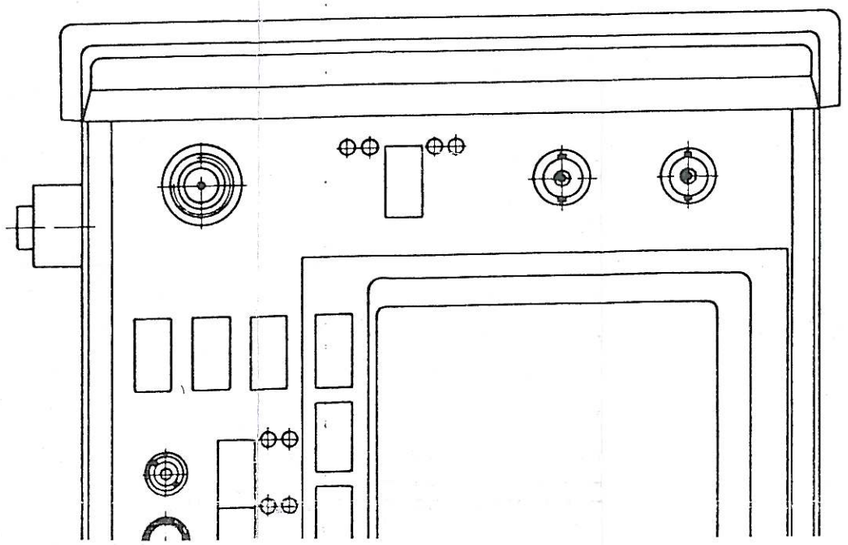

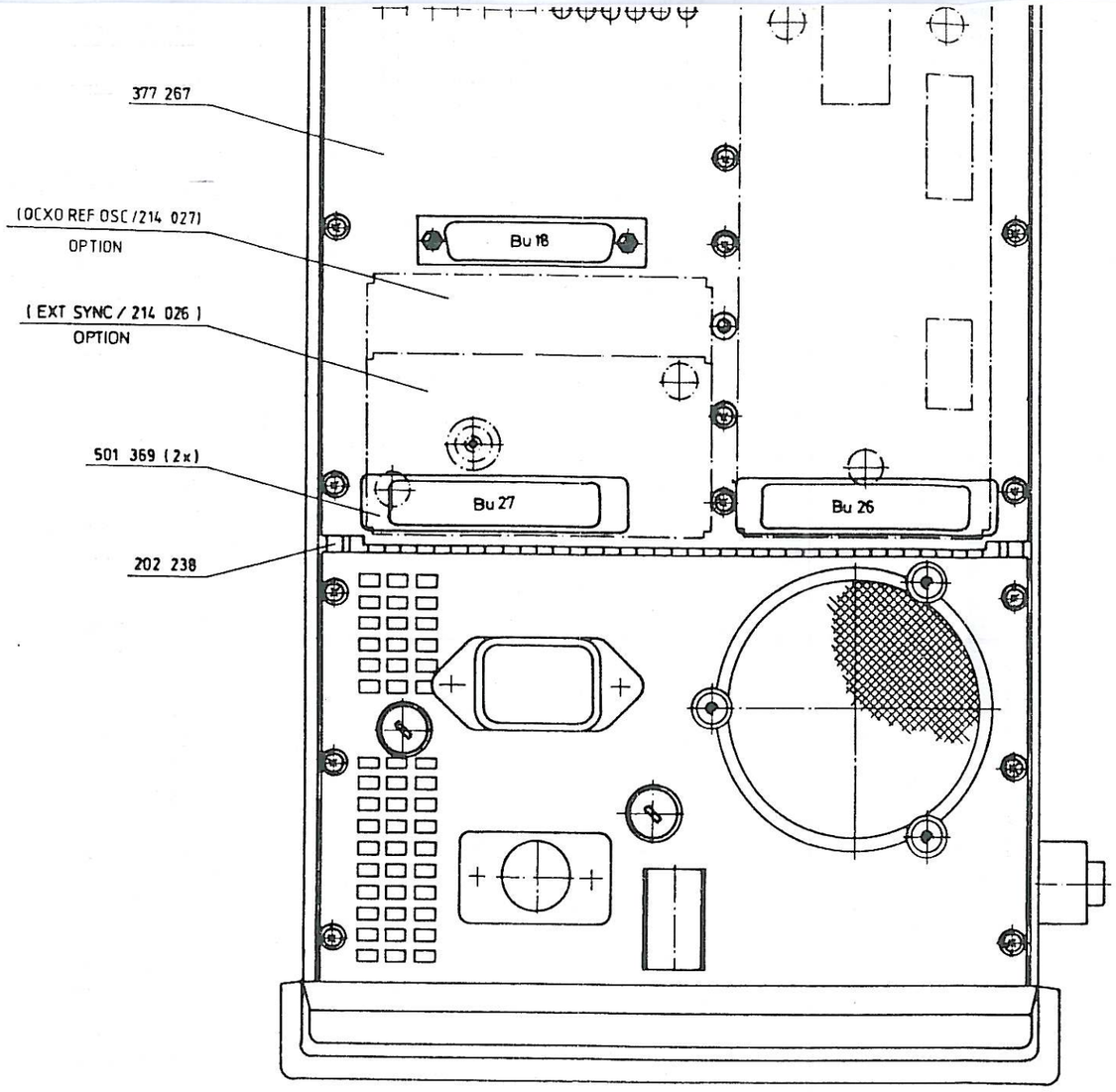
377 267
(OCXO REF OSC /214 027)
OPTION
(EXT SYNC / 214 026)
OPTION
501 369 (2x)
202 238
Bu 18
Bu 27
Bu 26

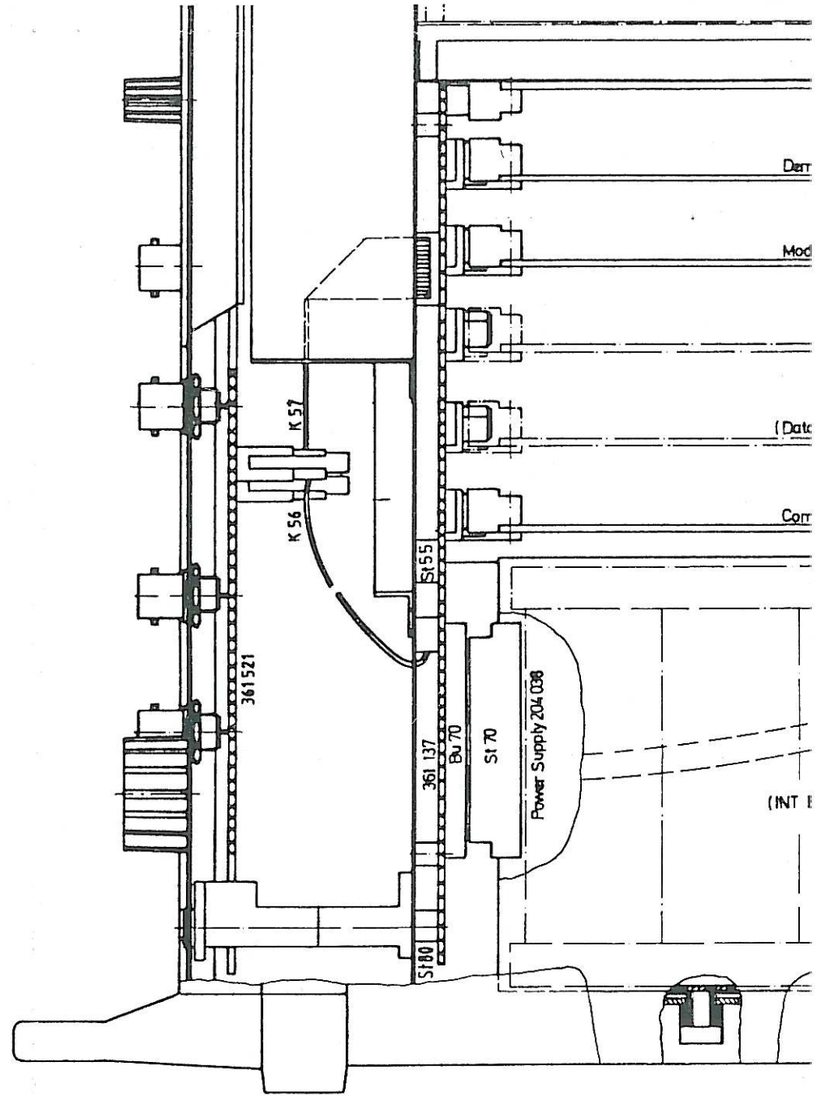
K 57
K 56
St 55
361 521
361 137
Bu 70
St 70
Power Supply 204 038
St 100

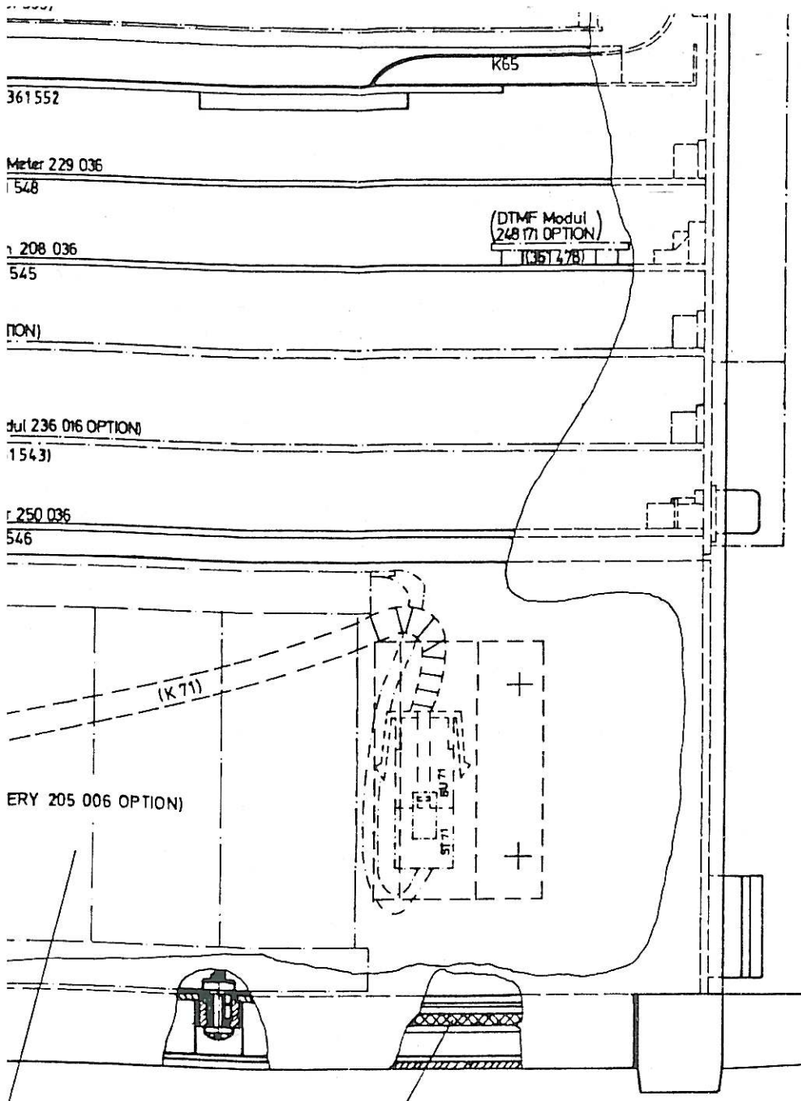

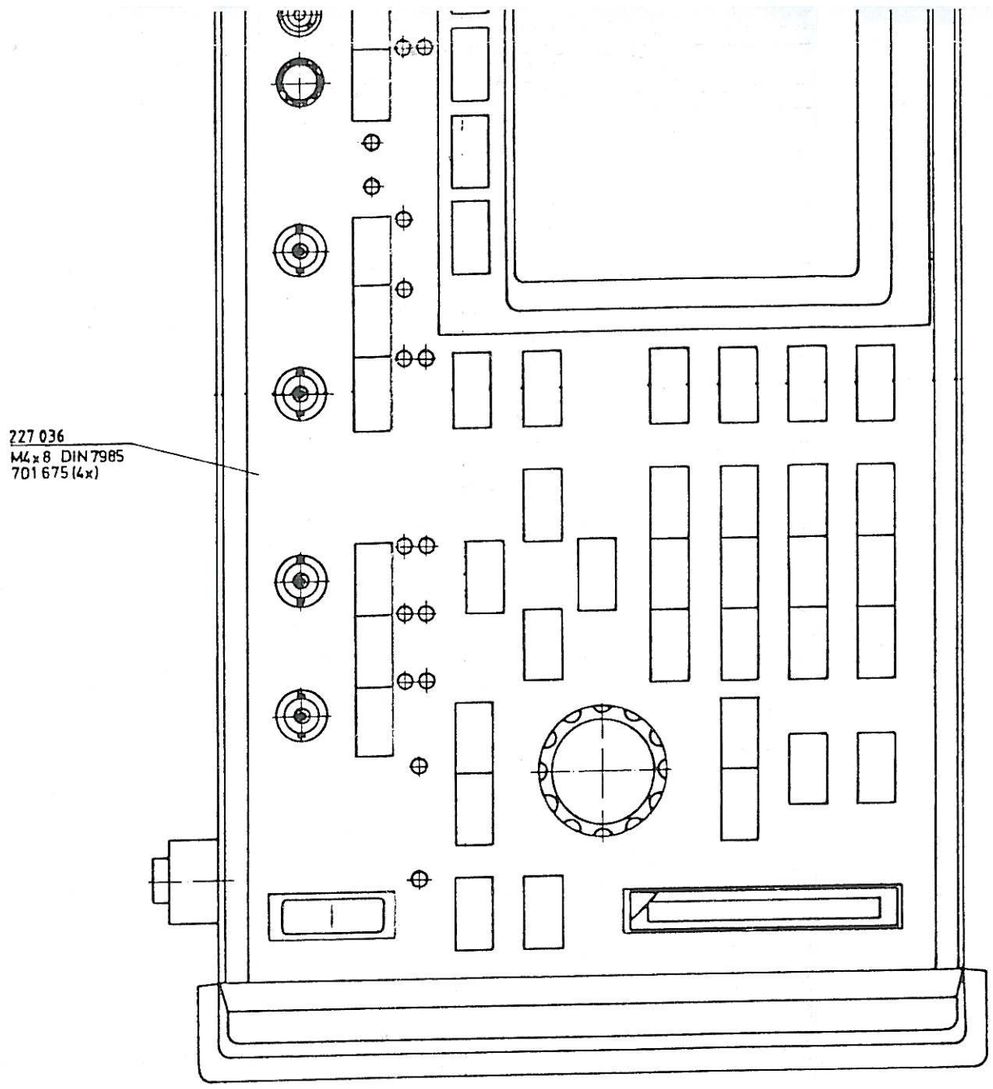

EINBAU INT BATTERY

1. Distanzrohr (2x) entfernt
2. Kabelbaum K 71 am Boden verlegt
Kabelspiralband von K71 muß außerhalb des Batteriekörpers liegen
3. Batterie eingelegt und festgeschraubt (2x)
4. Steckverbindung Bu/St 71 hergestellt
5. Kabelbaum incl. Steckverbindung zwischen Batterie und Luftleitprofil verstaut

Aus gabe	Änd Mitg	Datum	Name				
10	4089.14	18.10.94	Wi	Richter	Freimaß Toleranzen	Maßstab 1:1	Schlumberger Technologi Ingolstädter Straße 67 a 8000 München 46
09	3089.10	19.5.90	Dem.				
08	2089.28	31.8.92	Unger				
07	2089.01	06.08.91	[illegible]				
06	1089.89	24.10.91	[illegible]	Werkstoff			COMMUNICATION MON
05	1089.67	10.9.91	[illegible]				
04	1089.35	15.5.91	Wi.				
03	1089.19	21.3.91	Kr.				
02	1089.2	14.1.91	Kr.	Oberfläche	'90	Datum	Name
01	0089.59	12.10.90	[illegible]		gez	21.9.	West
					bearb	12.10.	
					gepr		

201 238

Gerät 4015 / 108 901

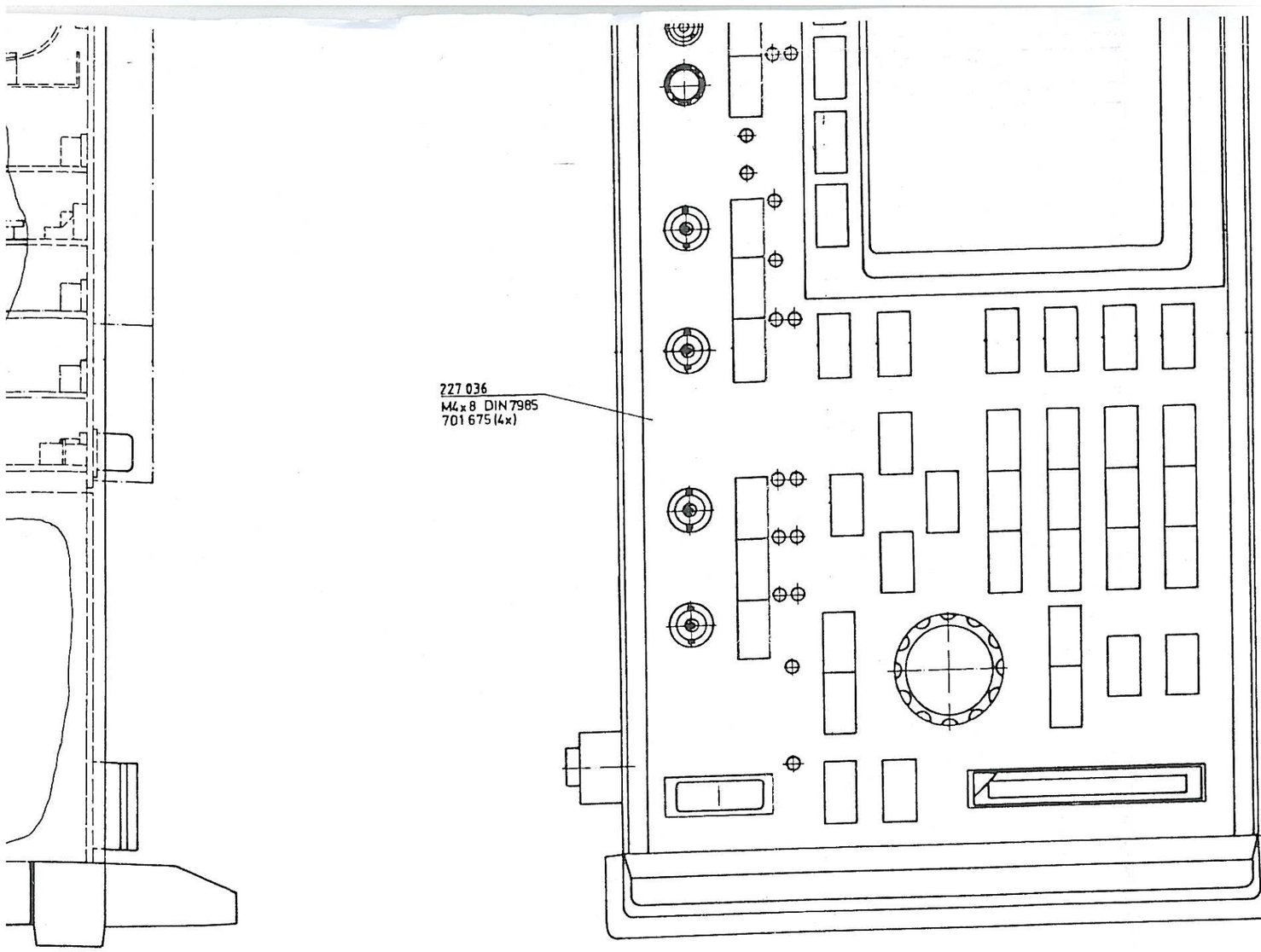

10	4089.14	10.10.94	Wi	Rohteil	Freimaß Toleranzen	Maßstab	Schlumberger Technologies GmbH Ingolstädter Straße 67 a 8000 München 46
09	3089.10	19.5.93	Dem.			1 : 1	COMMUNICATION MONITOR
08	2089.28	31.8.92	Unger				
07	2089.01	05.08.91	[illegible]				
06	1089.84	24.1.91	[illegible]	Werkstoff			
05	1089.67	18.9.91	[illegible]				
04	1089.35	15.5.91	Wi.				
03	1089.19	21.3.91	Kr.				
02	1089.2	14.1.91	Kr.	Oberfläche	'90 Datum	Name	201 238
01	1089.59	12.10.90	[illegible]		gez. 21.9.	West	
Ausgabe	Änderung	Datum	Name		beerb. 12.10.	[illegible]	Gerät 4015 / 108 901
					gepr.		

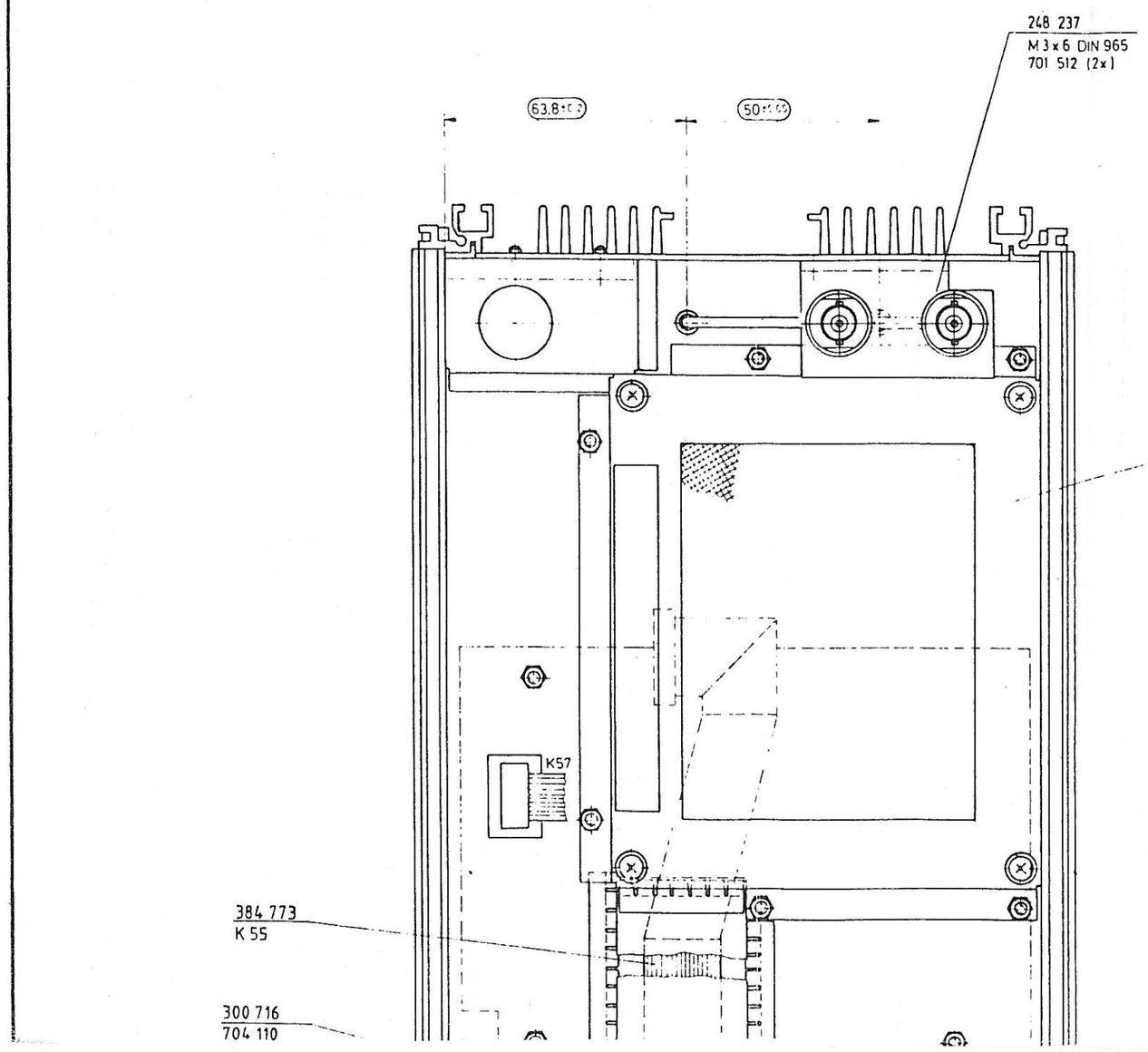
248 237
M 3 x 6 DIN 965
701 512 (2x)
63.8
50
300 719
704 110 (6x)
M3 DIN 934
706 105 (6x)
J3,2 DIN 6797
856 106
701 640 (4x)
M3x6 DIN 7985
706 105 (4x)
J3.2 DIN 6797
K57
384 773
K 55
300 716
704 110

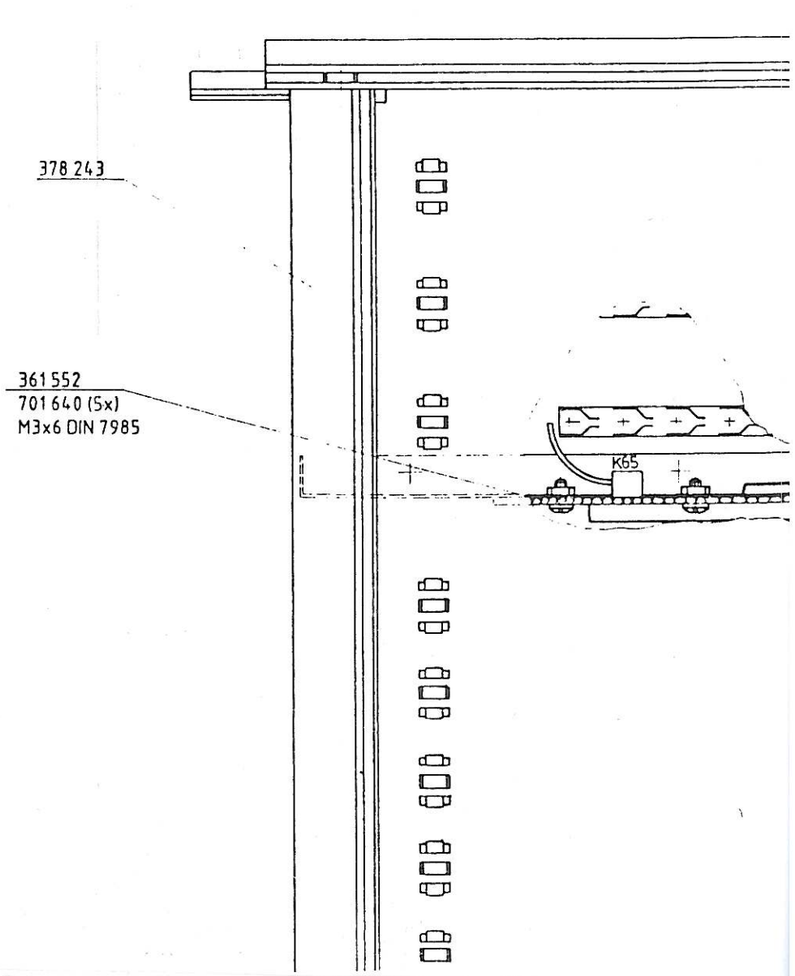
378 243
361 552
701 640 (5x)
M3x6 DIN 7985
K65

weich gelötet

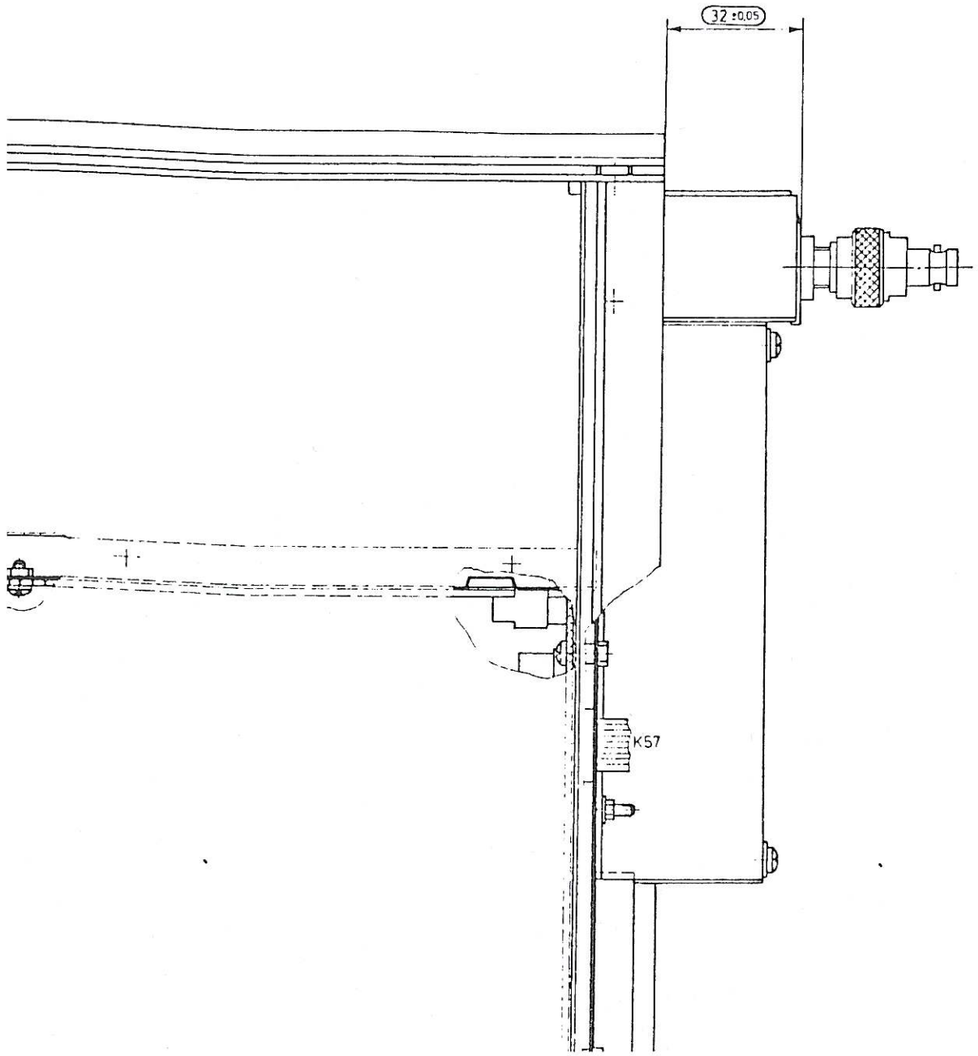

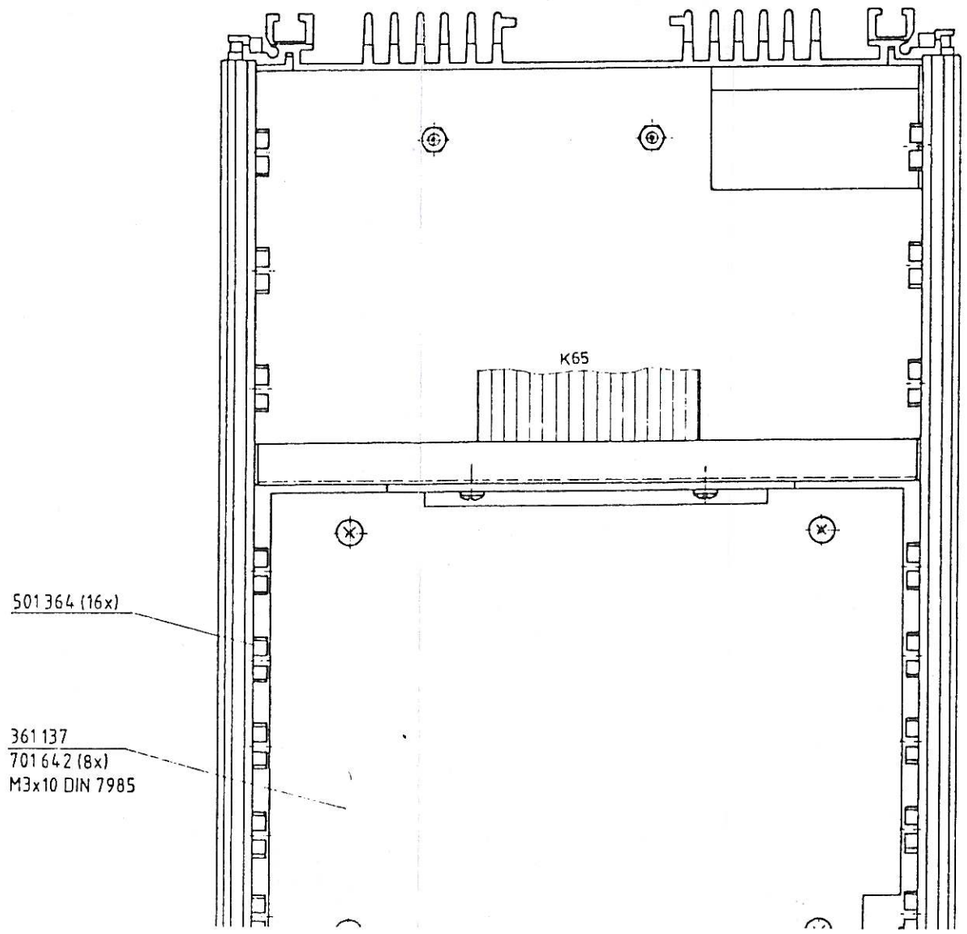

Motherboard

Besides the Memcard interface, the motherboard bears the slots for the individual boards.

Functional Description of Memcard Interface

The block diagram (Fig. 1) shows the major elements of the memory-card (Memcard) interface located on the motherboard. This interface consists of a PIA D1 (8255), a buffer D2 (74LS645) and select logic D3. The interface is driven by the system bus HPD0 through HPD7, HPA0 through HPA3 and HPCS2. The Memcard itself is selected with HPCS3. When the microcomputer generates a RESET, the Memcard is made inactive so that no unwanted write cycles can occur. Memcards with a capacity of up to 256 KBytes are permissible.

The address (MCAi) and control signals (MCWR, MCOE) are transferred via the system bus to the PIA and appear on ports PA, PB and PC. Once these signals have stabilized, the Memcard can be selected with HPCS3 and the bidirectional buffer D2 switched to an active state.

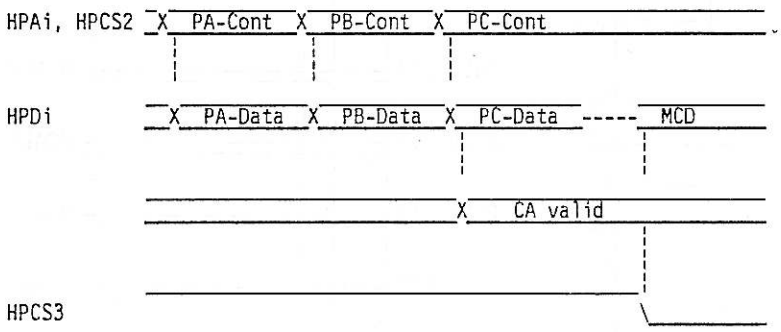

Via PC4 it is possible to query whether a Memcard is inserted (PC4 = 0). The charging current of the optional "Internal battery" is measured in the power supply by operational amplifier A1. Signal line PC5 is High when the internal battery is being charged; it is Low for a trickle charge or during battery powering of the set.

Fig. 1: Block diagram of memory-card interface

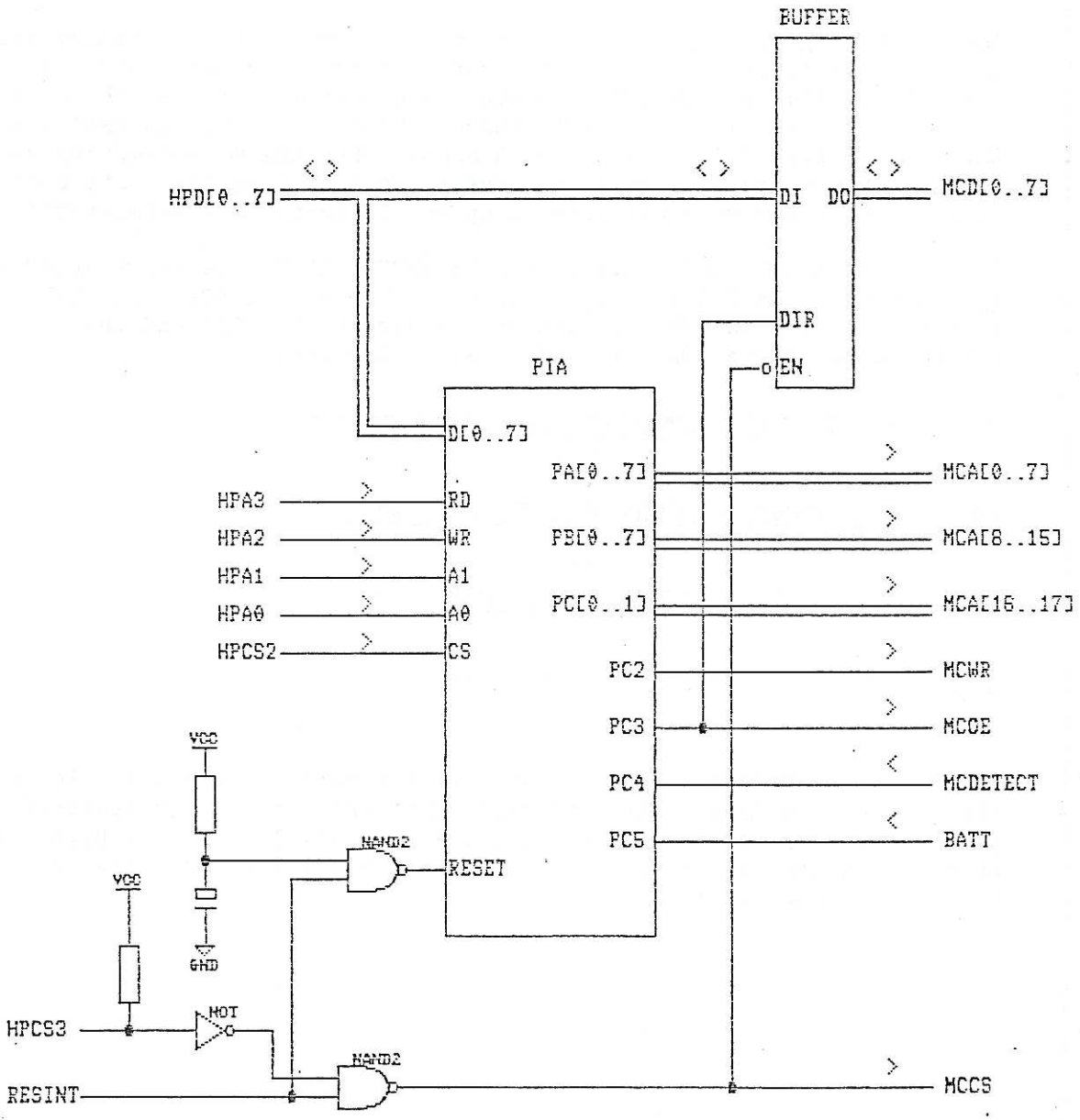

Issue	Date	Unit	Sub Unit	Ref. No	Series	Sheet
01	17.05.91	STABILOCK 4015	Motherboard	361 137 F		2/2

M3 DIN 934
706 105
J3,2 DIN 6797

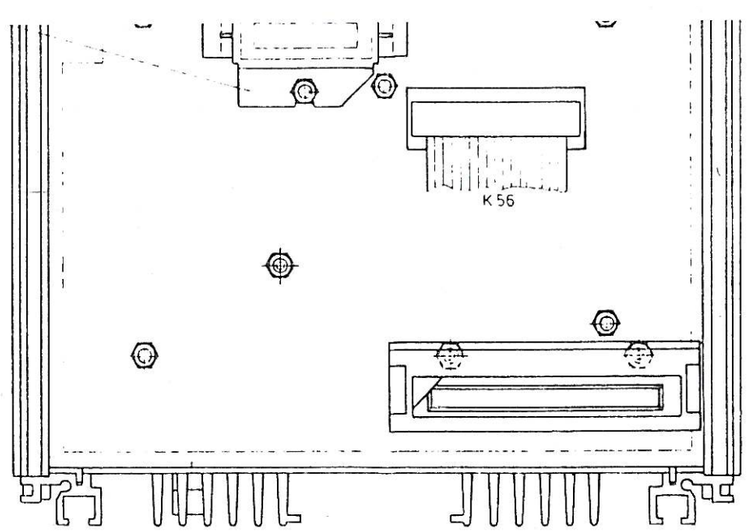

300 701
701 640 (2x)
M3x6 DIN 7985
706 105 (2x)
J3,2 DIN 6797

501 491
704 083 (2x)

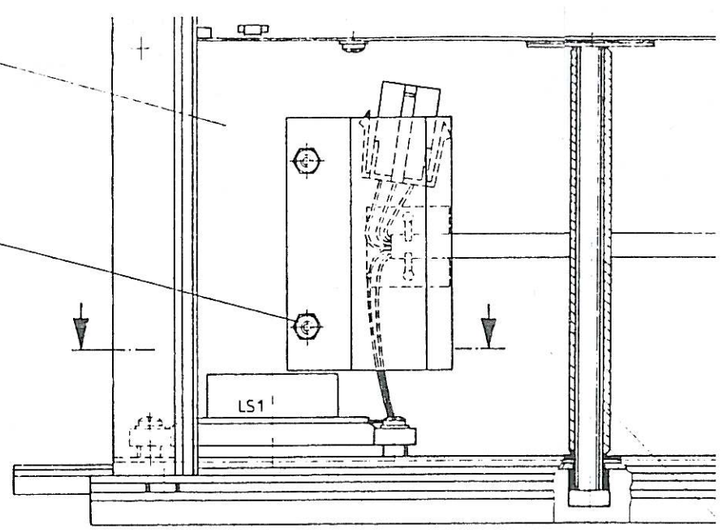

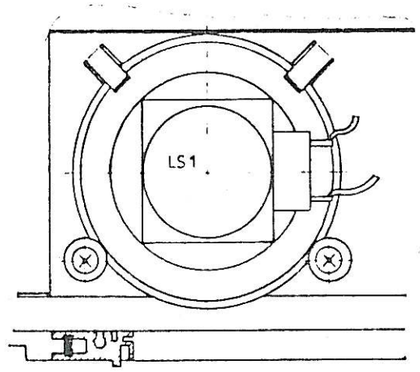

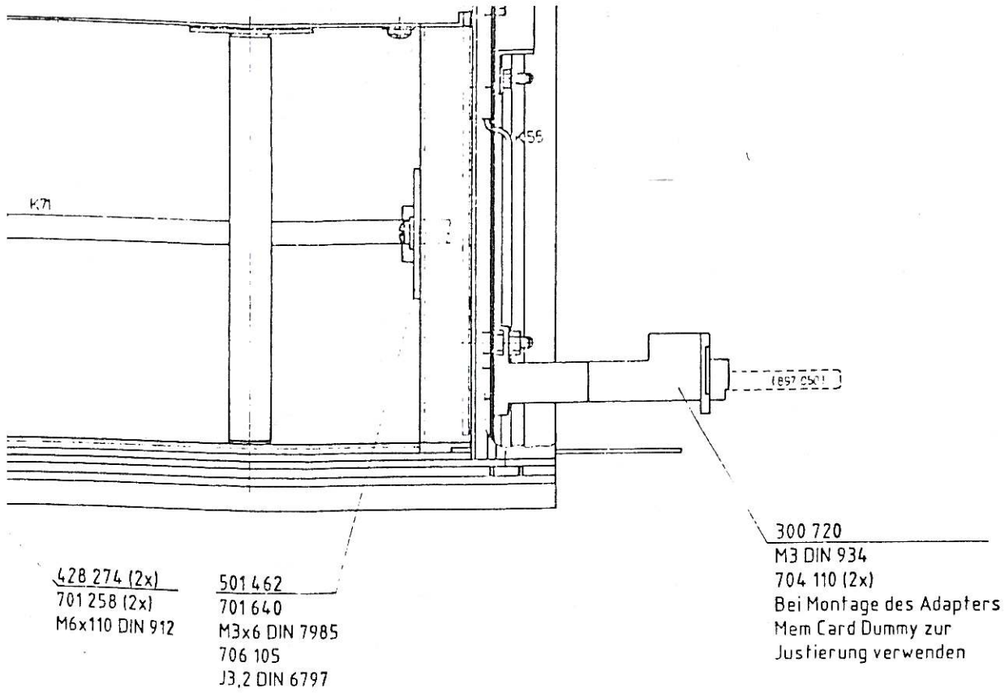

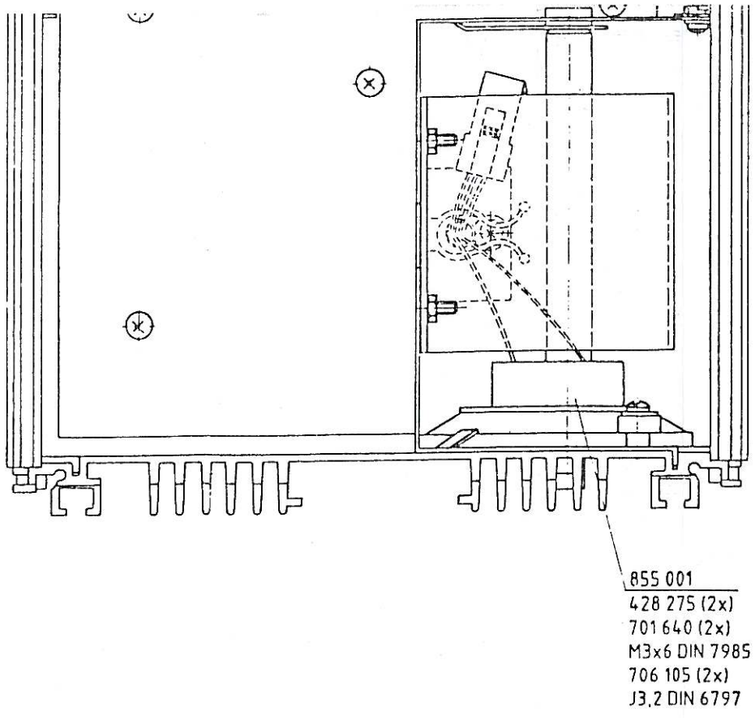

Schaltplanpositionierung ≙ 201 238 S

Kontrollmaß
Critical measurements

09				
08				
07				
06				
05				
04	4089,4	15.3.94	Kr	
03	1089,67	4.9.91	Kr	
02	1085,18	5.3.91	Kr	
01	0085,42	10.9.90	Pc	
00				

Schlumberger Technologies GmbH
Ingolstädter Straße 67 a
8000 München 46

1 1

DIN A 0

Rahmen, komplett

202 238 B

Serien- und Fertigungsnummer aufgeklebt

Klebeschild Typ 1 NW 10 R 5x16
selbstzerstörend

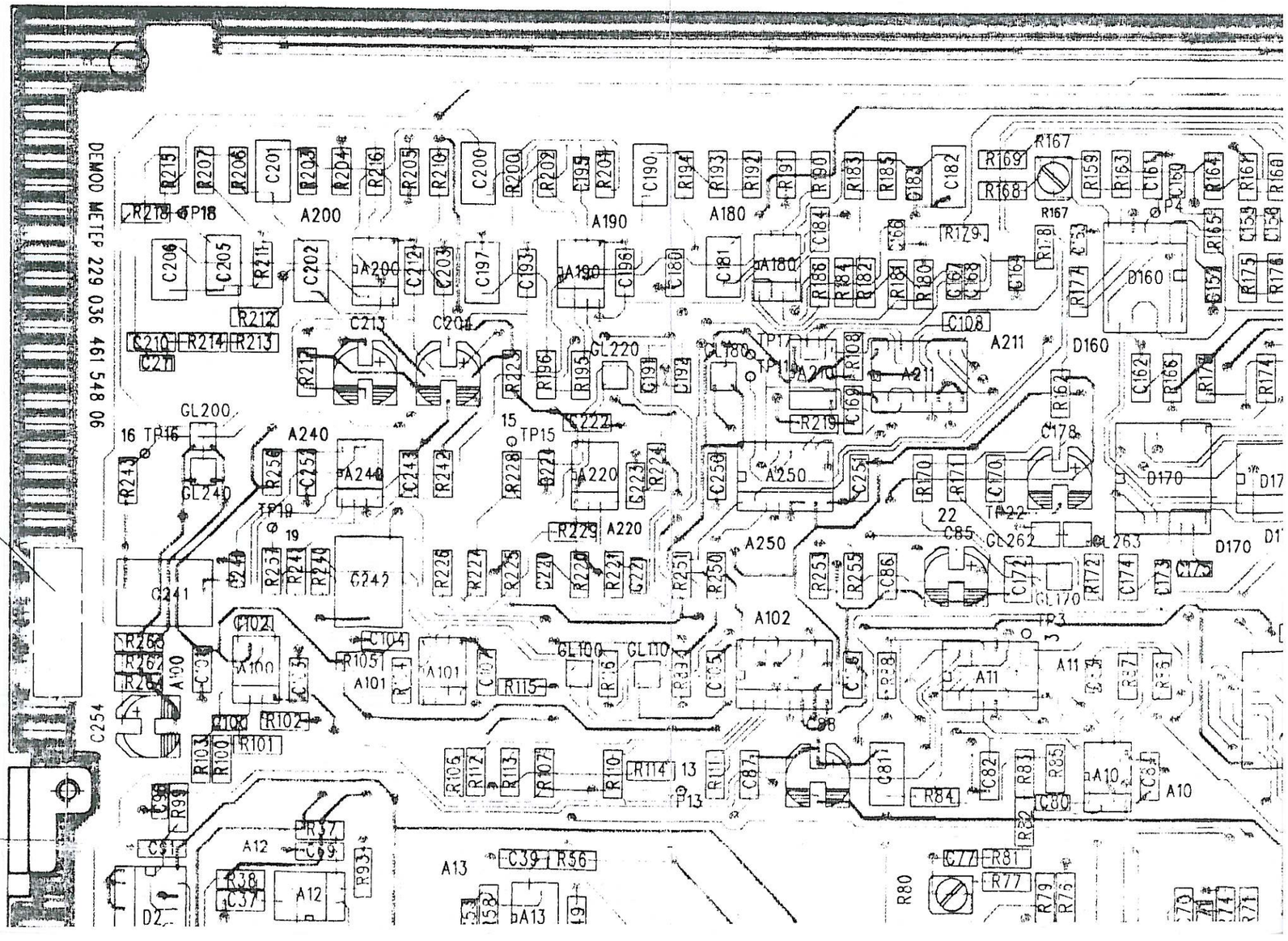

Reflow gelötet
Hierzu Bauteilklebemaske 461 548 06

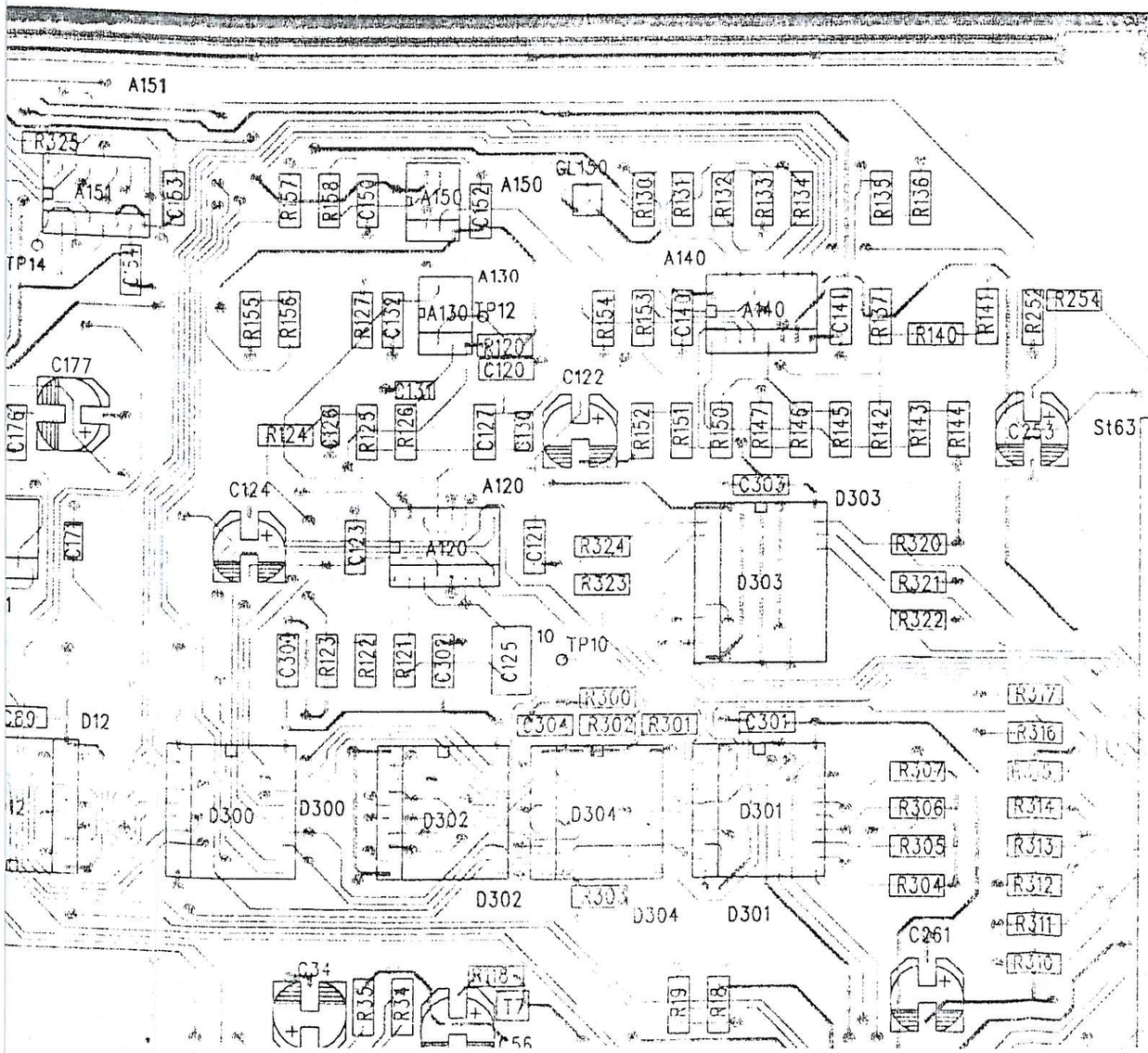

Reflow gelötet
Hierzu Bauteilklebemaske 461 548 06

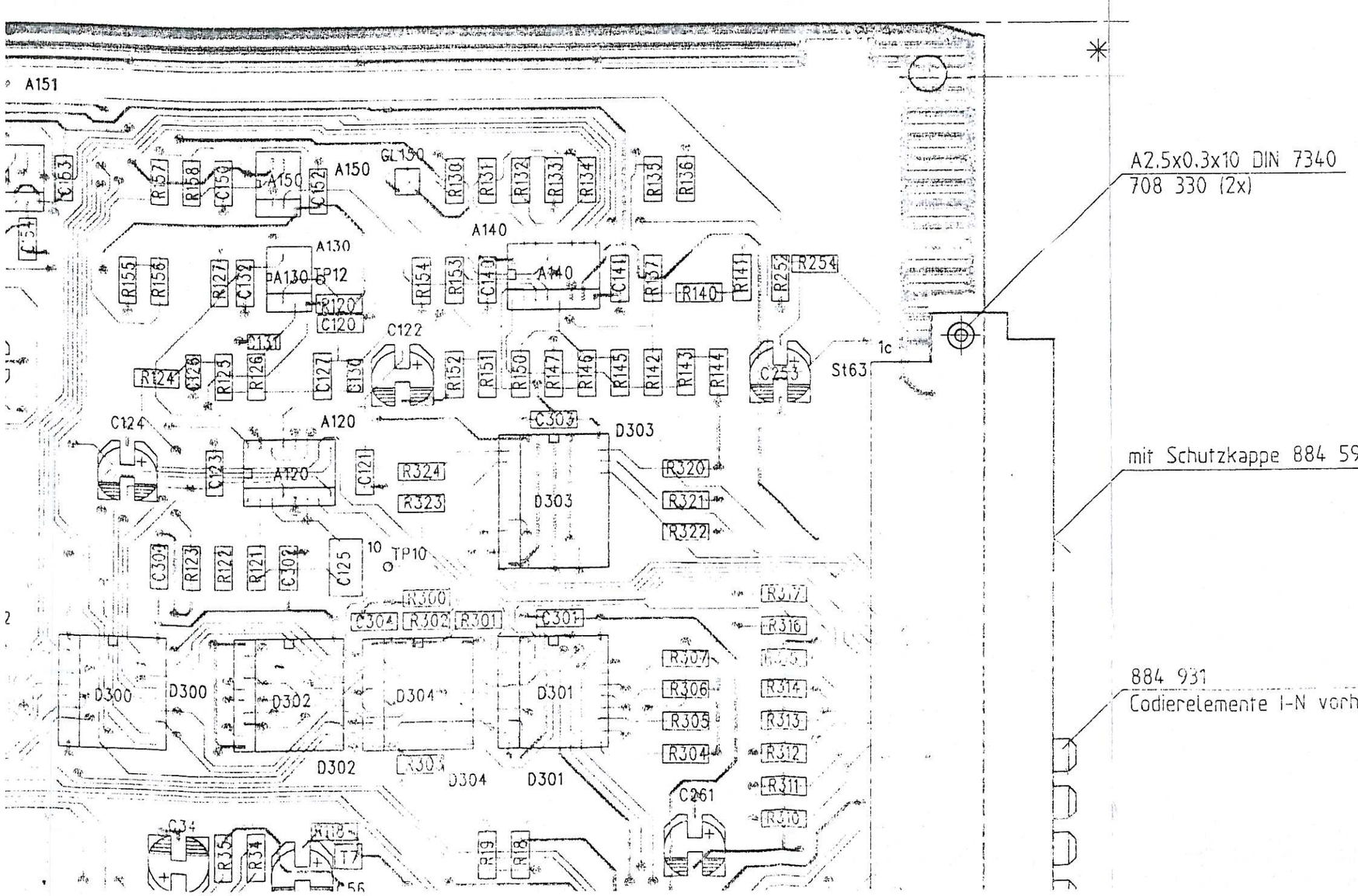

A2.5x0.3x10 DIN 7340
708 330 (2x)

mit Schutzkappe 884 591 abgedeckt

884 931
Codierelemente I-N vorhanden

790 085
M2.5x6 DIN 7985
701 654

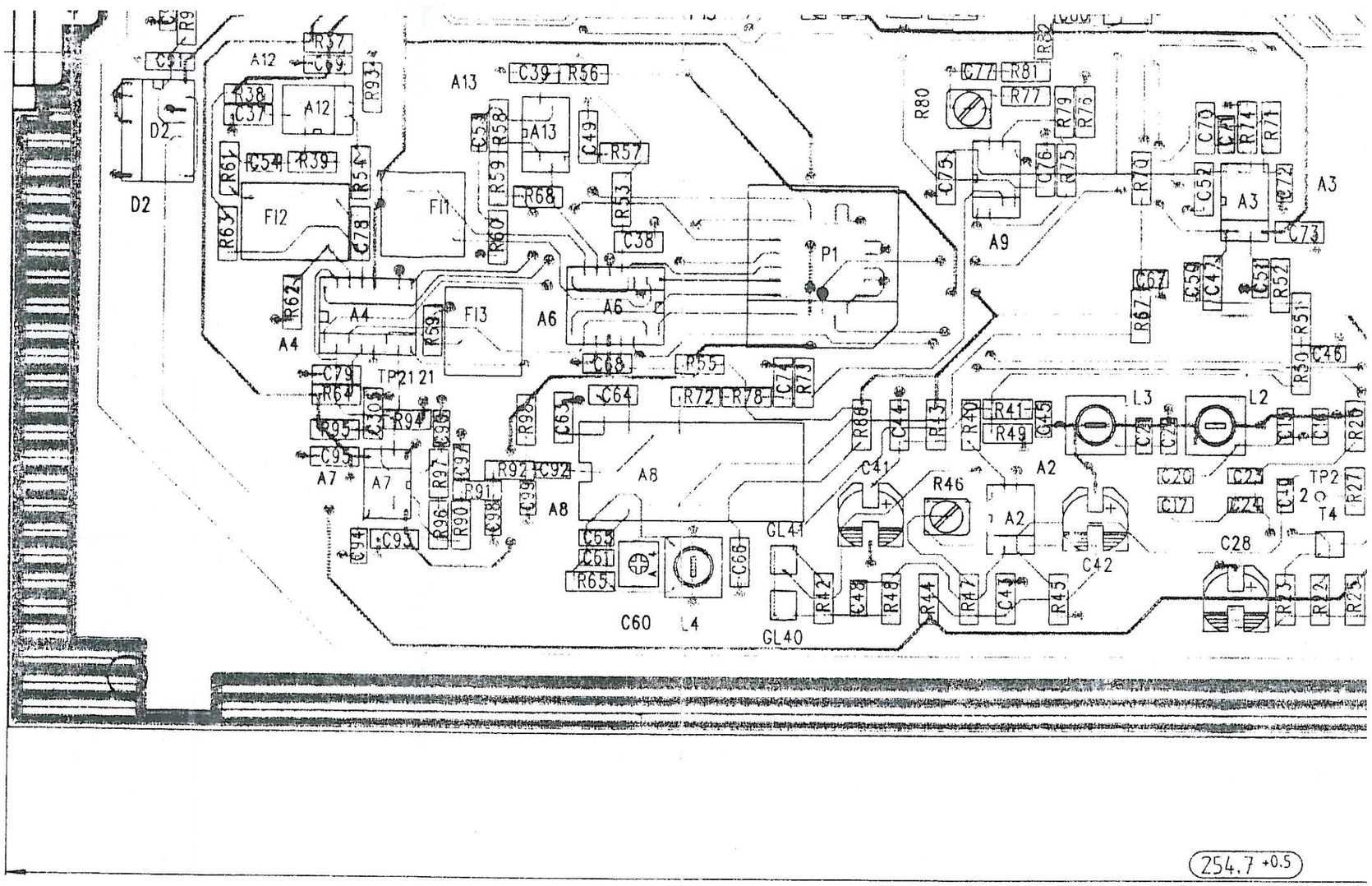

A12
A13
A3
A9
A4
A6
A7
A8
A2
D2
F12
F11
F13
P1
L3
L2
L4
C60
C41
C42
C28
R46
GL40
GL41
TP2
T4
TP2121
254.7 +0.5

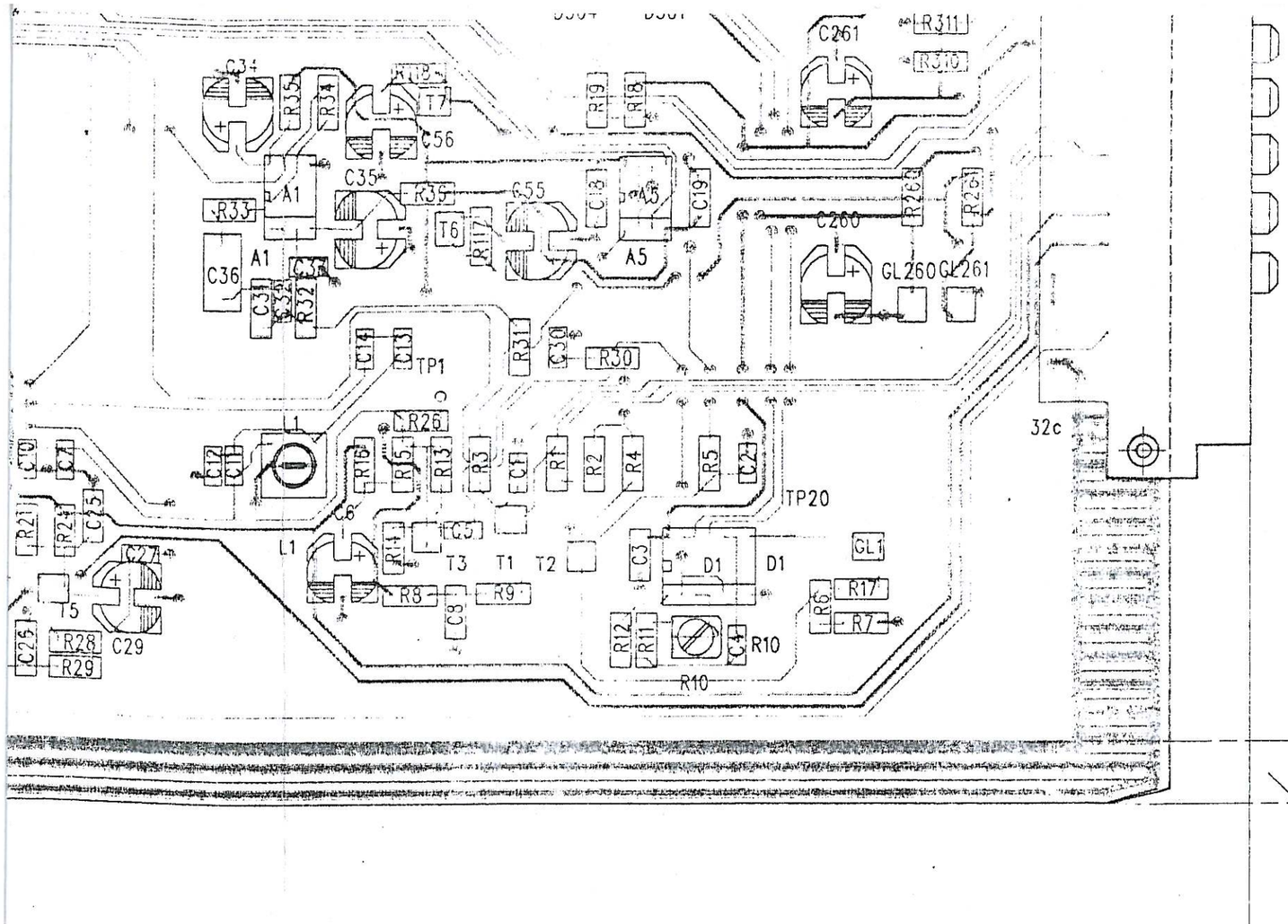

Beide Randstreifen frei von lötbedingten Zinnauftrag

= Kontrollmaß
Critical measurements

Schaltplanpositionierung = 361 548 S/Sa

Rev. No.	Rev. Sht.	Date	Name
09			
08			
07			
06	4089.5	16.3.94	Kr.
05			
04			
03			
02			
01			
00			

Rohteil / Initial part:

Werkstoff / Material:

Oberfläche / Surface:

Freimaß toleranzen / default tolerance:

Scale: 2:1

DIN A1

	Date	Name
1994		
Drawn	16.3.94	Kr.
Designed		
Checked		

Schlumberger Technologies GmbH
Gutenbergstr. 2-4
85737 Ismaning

Bezeichnung: / Description:
Bestückte Leiterplatte
Type: DEMOD METER

Zeichnungsnr.: / Drawing No.:
361 548 6

Gerät: / Unit: 4015 / 229.036

This drawing is the property of SCHLUMBERGER. Reproduction, unauthorized use, communication to a third party is liable for damages.

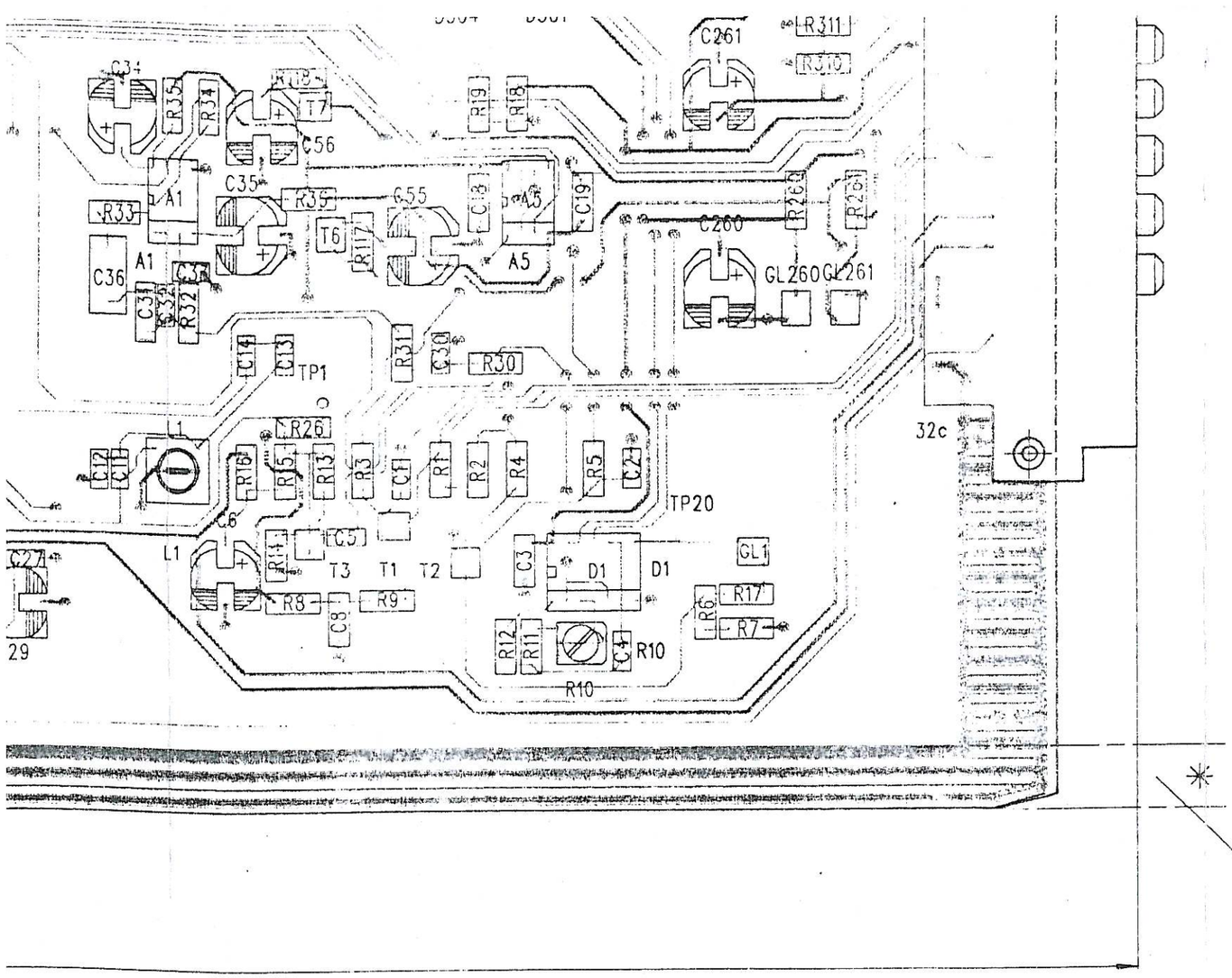

Beide Randstreifen frei von lötbedingten Zinnauftrag

= Kontrollmaß
Critical measurements

Schaltplanpositionierung = 361 548 S / Sa

Rev. No.	Rev. Shr.	Date	Name
09			
08			
07			
06	4089.5	16.3.94	Kr.
05			
04			
03			
02			
01			
00			

Rohteil / Initial part:

Werkstoff / Material:

Oberfläche / Surface:

Freimaß toleranzen / default tolerance:

	1994	Date	Name
Drawn		16.3.94	Kr.
Designed			
Checked			

Scale: 2:1

DIN A1

Schlumberger Technologies GmbH
Gutenbergstr. 2-4
85737 Ismaning

Bezeichnung: / Description:
Bestückte Leiterplatte
Type: DEMOD METER

Zeichnungsnr.: / Drawing No.:
361 548 G

Gerät: / Unit: 4015 / 229 036

This drawing is the property of SCHLUMBERGER. Reproduction, unauthorized use, communication to a third party is liable to prosecution and liable for damages.

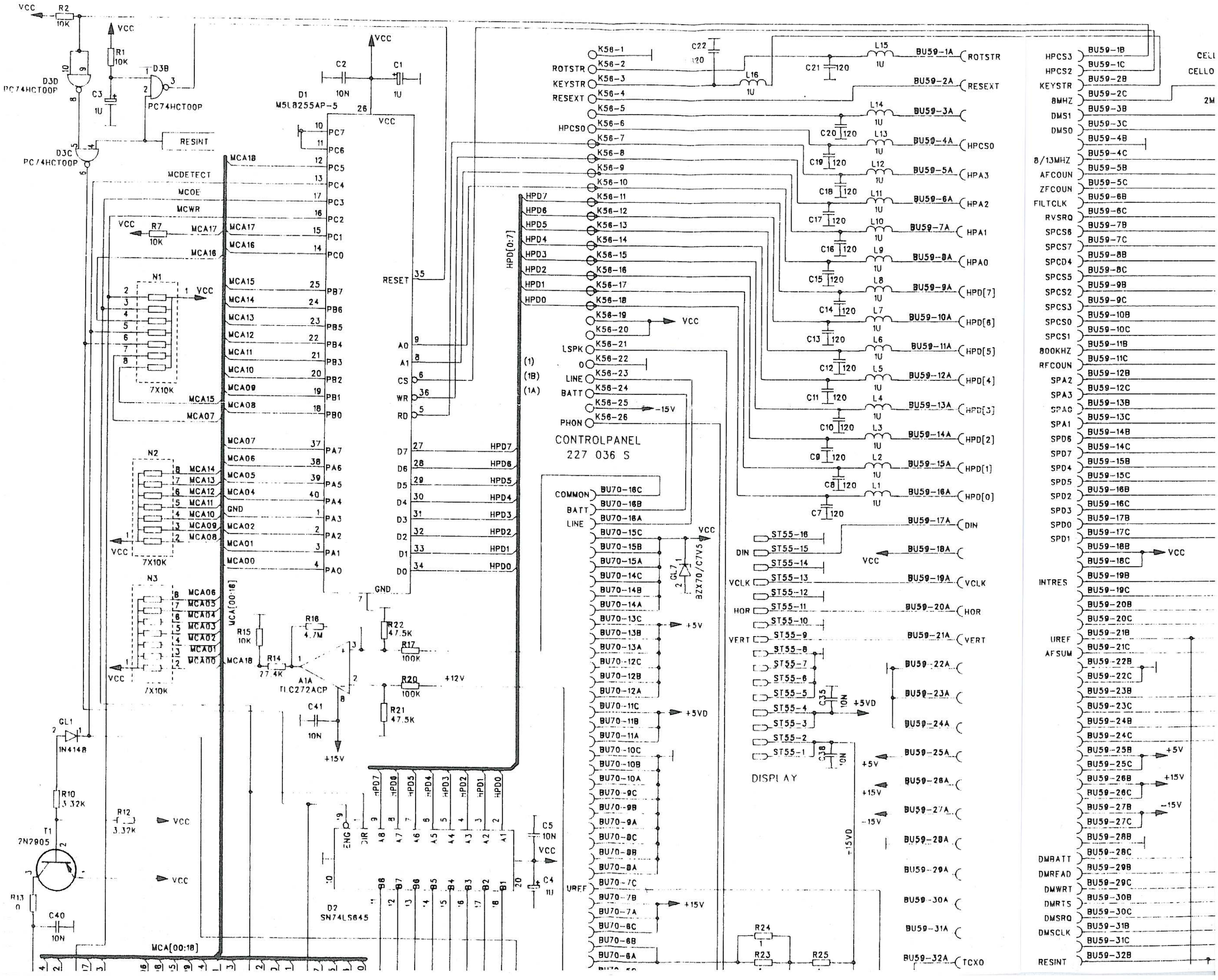
VCC
R2
10K
R1
10K
D3D
PC74HCT00P
C3
1U
D3B
PC74HCT00P
D3C
PC74HCT00P
RESINT
C2
10N
C1
1U
D1
M5L8255AP-5
RESET
MCDETECT
MCOE
MCWR
R7
10K
MCA17
MCA16
MCA18
N1
7X10K
MCA15
MCA07
N2
MCA14
MCA13
MCA12
MCA11
MCA10
MCA09
MCA08
N3
MCA06
MCA05
MCA04
MCA03
MCA02
MCA01
MCA00
MCA[00:18]
R15
10K
R14
27.4K
R16
4.7M
A1A
TLC272ACP
R22
47.5K
R17
100K
R20
100K
+12V
R21
47.5K
C41
10N
+15V
GND
PC7
PC6
PC5
PC4
PC3
PC2
PC1
PC0
PB7
PB6
PB5
PB4
PB3
PB2
PB1
PB0
PA7
PA6
PA5
PA4
PA3
PA2
PA1
PA0
A0
A1
CS
WR
RD
D7
D6
D5
D4
D3
D2
D1
D0
HPD7
HPD6
HPD5
HPD4
HPD3
HPD2
HPD1
HPD0
HPD[0:7]
GL1
1N4148
R10
3.32K
T1
2N2905
R13
0
C40
10N
R12
3.32K
D2
SN74LS645
ENG
DIR
C5
10N
C4
1U
MCA[00:18]
K56-1
K56-2
K56-3
K56-4
K56-5
K56-6
K56-7
K56-8
K56-9
K56-10
K56-11
K56-12
K56-13
K56-14
K56-15
K56-16
K56-17
K56-18
K56-19
K56-20
K56-21
K56-22
K56-23
K56-24
K56-25
K56-26
ROTSTR
KEYSTR
RESEXT
HPCS0
LSPK
LINE
BATT
PHON
-15V
CONTROLPANEL
227 036 S
COMMON
BU70-16C
BU70-16B
BU70-16A
BU70-15C
BU70-15B
BU70-15A
BU70-14C
BU70-14B
BU70-14A
BU70-13C
BU70-13B
BU70-13A
BU70-12C
BU70-12B
BU70-12A
BU70-11C
BU70-11B
BU70-11A
BU70-10C
BU70-10B
BU70-10A
BU70-9C
BU70-9B
BU70-9A
BU70-8C
BU70-8B
BU70-8A
BU70-7C
BU70-7B
BU70-7A
BU70-6C
BU70-6B
BU70-6A
UREF
+5V
+5VD
GL7
BZX70/C7V5
C22
120
L16
1U
C21
120
L15
1U
C20
120
L14
1U
C19
120
L13
1U
C18
120
L12
1U
C17
120
L11
1U
C16
120
L10
1U
C15
120
L9
1U
C14
120
L8
1U
C13
120
L7
1U
C12
120
L6
1U
C11
120
L5
1U
C10
120
L4
1U
C9
120
L3
1U
C8
120
L2
1U
C7
120
L1
1U
BU59-1A
BU59-2A
BU59-3A
BU59-4A
BU59-5A
BU59-6A
BU59-7A
BU59-8A
BU59-9A
BU59-10A
BU59-11A
BU59-12A
BU59-13A
BU59-14A
BU59-15A
BU59-16A
BU59-17A
BU59-18A
BU59-19A
BU59-20A
BU59-21A
BU59-22A
BU59-23A
BU59-24A
BU59-25A
BU59-26A
BU59-27A
BU59-28A
BU59-29A
BU59-30A
BU59-31A
BU59-32A
ROTSTR
RESEXT
HPCS0
HPA3
HPA2
HPA1
HPA0
HPD[7]
HPD[6]
HPD[5]
HPD[4]
HPD[3]
HPD[2]
HPD[1]
HPD[0]
DIN
VCLK
HOR
VERT
TCXO
ST55-16
ST55-15
ST55-14
ST55-13
ST55-12
ST55-11
ST55-10
ST55-9
ST55-8
ST55-7
ST55-6
ST55-5
ST55-4
ST55-3
ST55-2
ST55-1
C35
10N
C38
10N
DISPLAY
-15VD
R24
R23
R25
HPCS3
HPCS2
KEYSTR
8MHZ
DMS1
DMS0
8/13MHZ
AFCOUN
ZFCOUN
FILTCLK
RVSRQ
SPCS6
SPCS7
SPCD4
SPCS5
SPCS2
SPCS3
SPCS0
SPCS1
800KHZ
RFCOUN
SPA2
SPA3
SPA0
SPA1
SPD6
SPD7
SPD4
SPD5
SPD2
SPD3
SPD0
SPD1
INTRES
UREF
AFSUM
DMRATT
DMRFAD
DMWRT
DMRTS
DMSRQ
DMSCLK
RESINT
BU59-1B
BU59-1C
BU59-2B
BU59-2C
BU59-3B
BU59-3C
BU59-4B
BU59-4C
BU59-5B
BU59-5C
BU59-6B
BU59-6C
BU59-7B
BU59-7C
BU59-8B
BU59-8C
BU59-9B
BU59-9C
BU59-10B
BU59-10C
BU59-11B
BU59-11C
BU59-12B
BU59-12C
BU59-13B
BU59-13C
BU59-14B
BU59-14C
BU59-15B
BU59-15C
BU59-16B
BU59-16C
BU59-17B
BU59-17C
BU59-18B
BU59-18C
BU59-19B
BU59-19C
BU59-20B
BU59-20C
BU59-21B
BU59-21C
BU59-22B
BU59-22C
BU59-23B
BU59-23C
BU59-24B
BU59-24C
BU59-25B
BU59-25C
BU59-26B
BU59-26C
BU59-27B
BU59-27C
BU59-28B
BU59-28C
BU59-29B
BU59-29C
BU59-30B
BU59-30C
BU59-31B
BU59-31C
BU59-32B
CELL
CELLO
2M

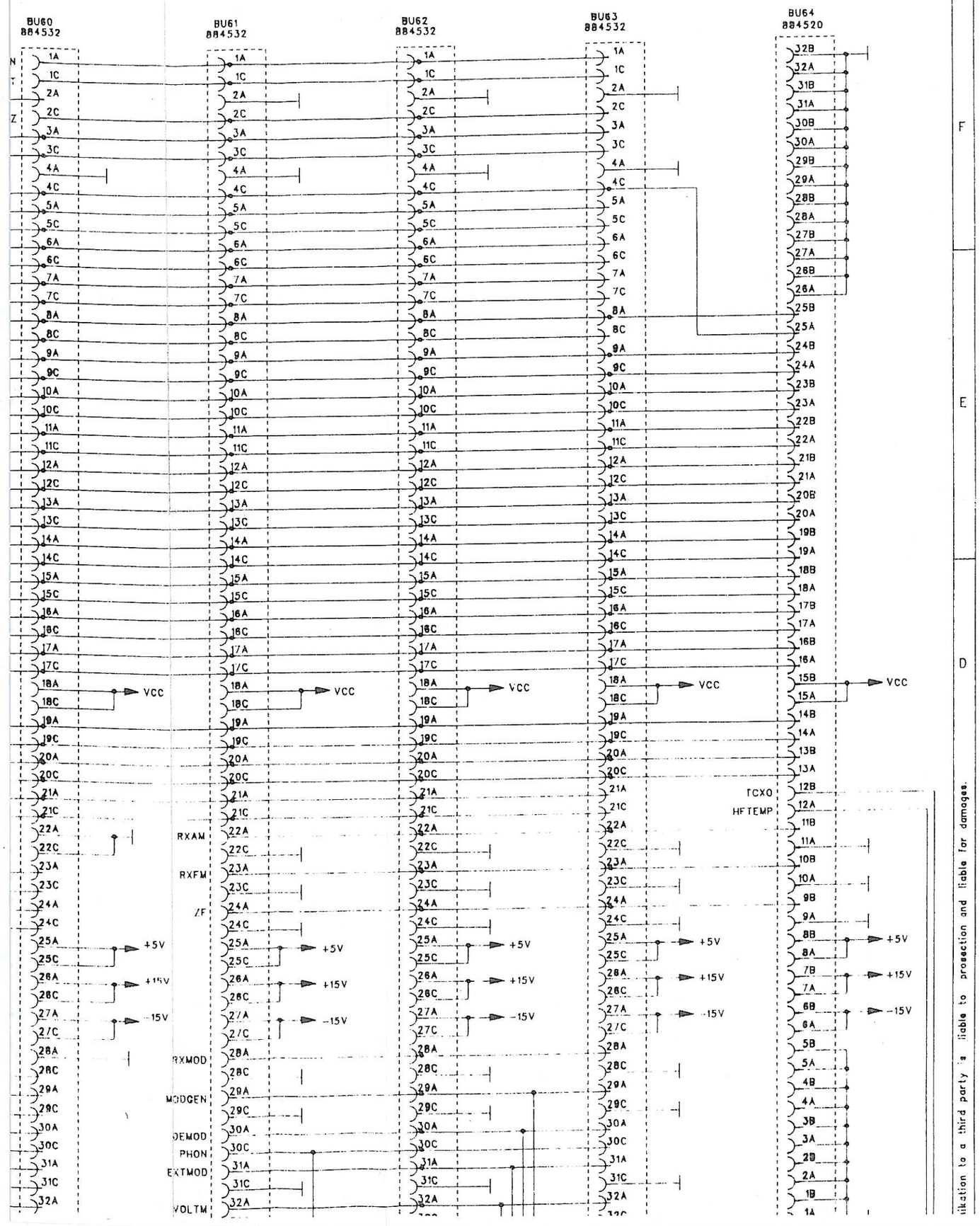

F

E

D

...ikation to a third party is liable to prosection and liable for damages.

MEMORY CARD

POWER-SUPPLY
204 038 S

BATTERY
205 006 S

SLOT 1
COMPUTER
250 036 S

SLOT 2
DATA-OPTIC
236 016 S

CONTROLPANEL
227 036 S

DISPLAY

07	3089.14	29.06.93	METZ	DESIGNED	
06	2089.23	30.06.92	Bau	CHECKED	
05	1089.70	11.09.91	Bau	DRAWN	16.2.1
INDEX ISS.	Ä.-NR. MODIF.	DATUM DATE	NAME NAME		DAT DA

4 DIESE

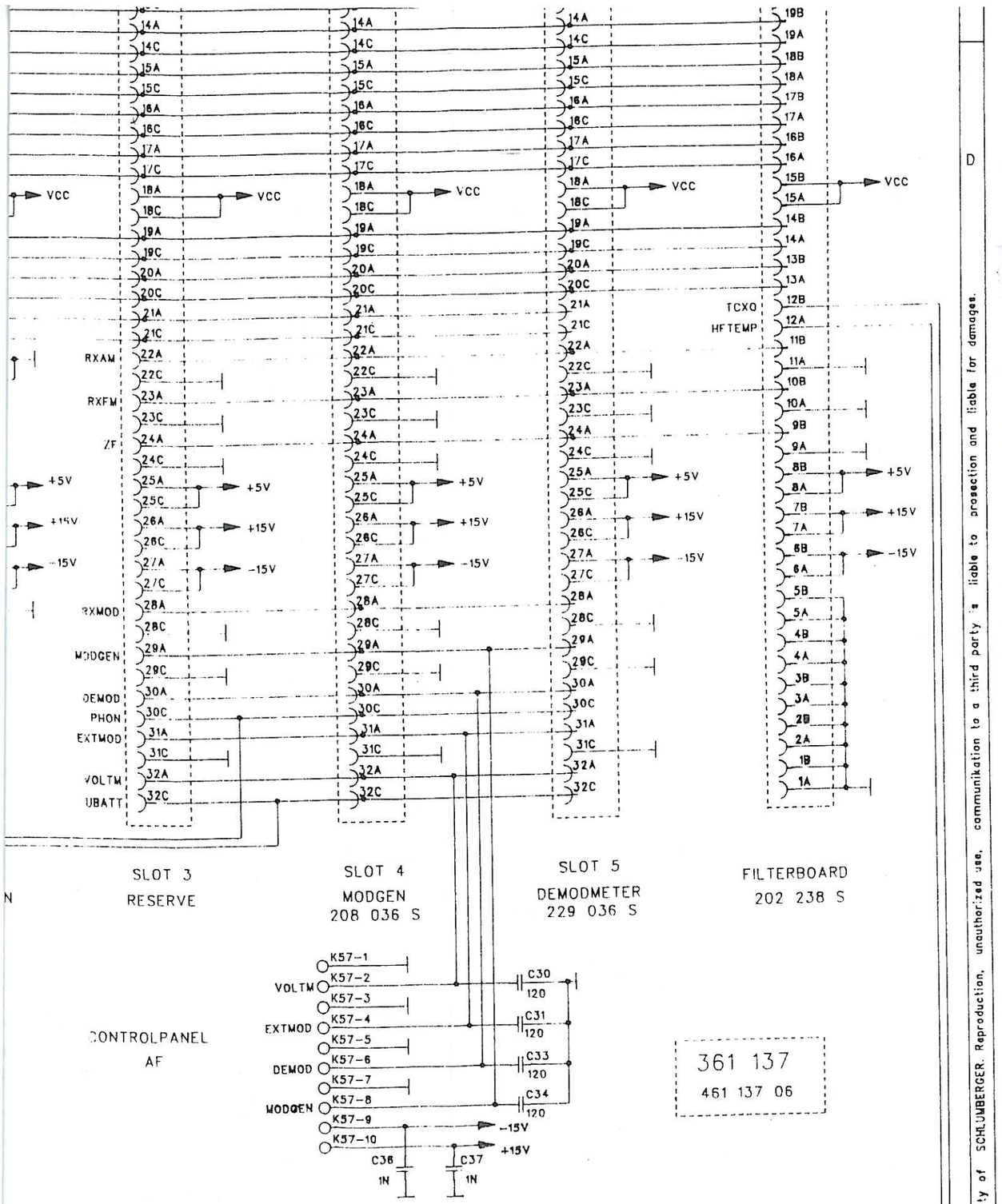

	SCHLUMBERGER TECHNOLOGIES GMBH Gutenbergstr. 2-4 8045 ISMANING	BEZEICHNUNG/DESCRIPTION: MOTHERBOARD	ZEICHNUNGSNR./DRAWING NO.: 361 137 S	1 VON/OF 1
			PROJECT/GROUP: 4015 B	BLATT SHEET

This drawing is the property of SCHLUMBERGER. Reproduction, unauthorized use, communikation to a third party is liable to prosecution and liable for damages.

EICHNUNG IST UNSER EIGENTUM. VERVIELFALTIGUNG, UNBEFUGTE VERWERTUNG, MITTEILUNG AN ANDERE IST STRAFBAR UND SCHADENERSATZPFLICHTIG.

832 904

Kodierelemente
G - L entfernt

Kodierelemente
I - N entfernt

461 137 06

„X"

384 775 / K71

884 930 (5x)
A 2,5 x 0,3 x 7 DIN 7340
708 327 (10 x)

max. 4 mm

Kodierelemente
E - J entfernt

Kodierelemente
C - H entfernt

Kodierelemente
A - F entfernt

weich gelötet

113 (8x)

384 771 / K56

884 908 / St80

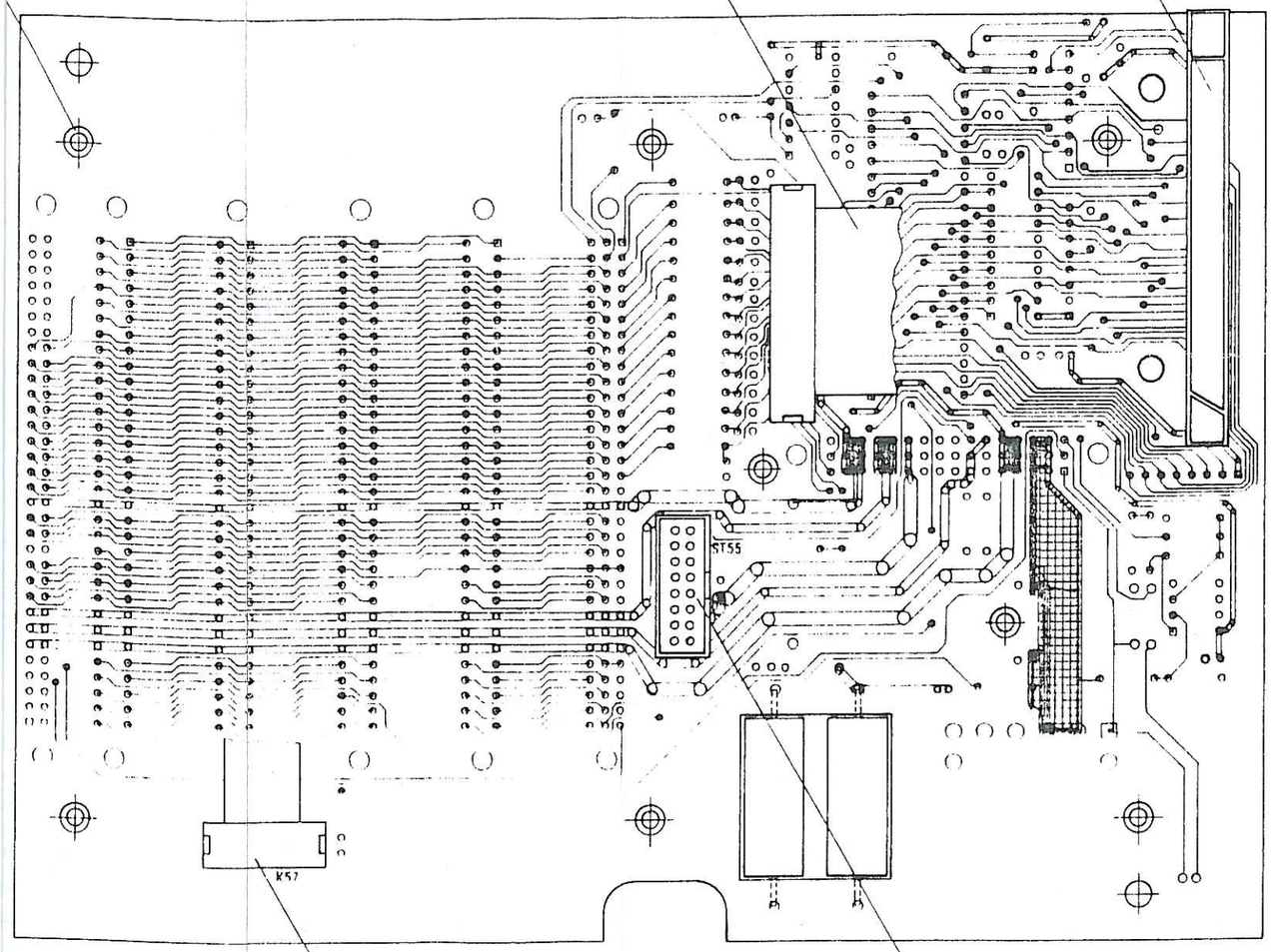

384 772 / K57

884 890 / St55

Ansicht „X" M2:1

R5 mit Silicon-Kleber 761 021

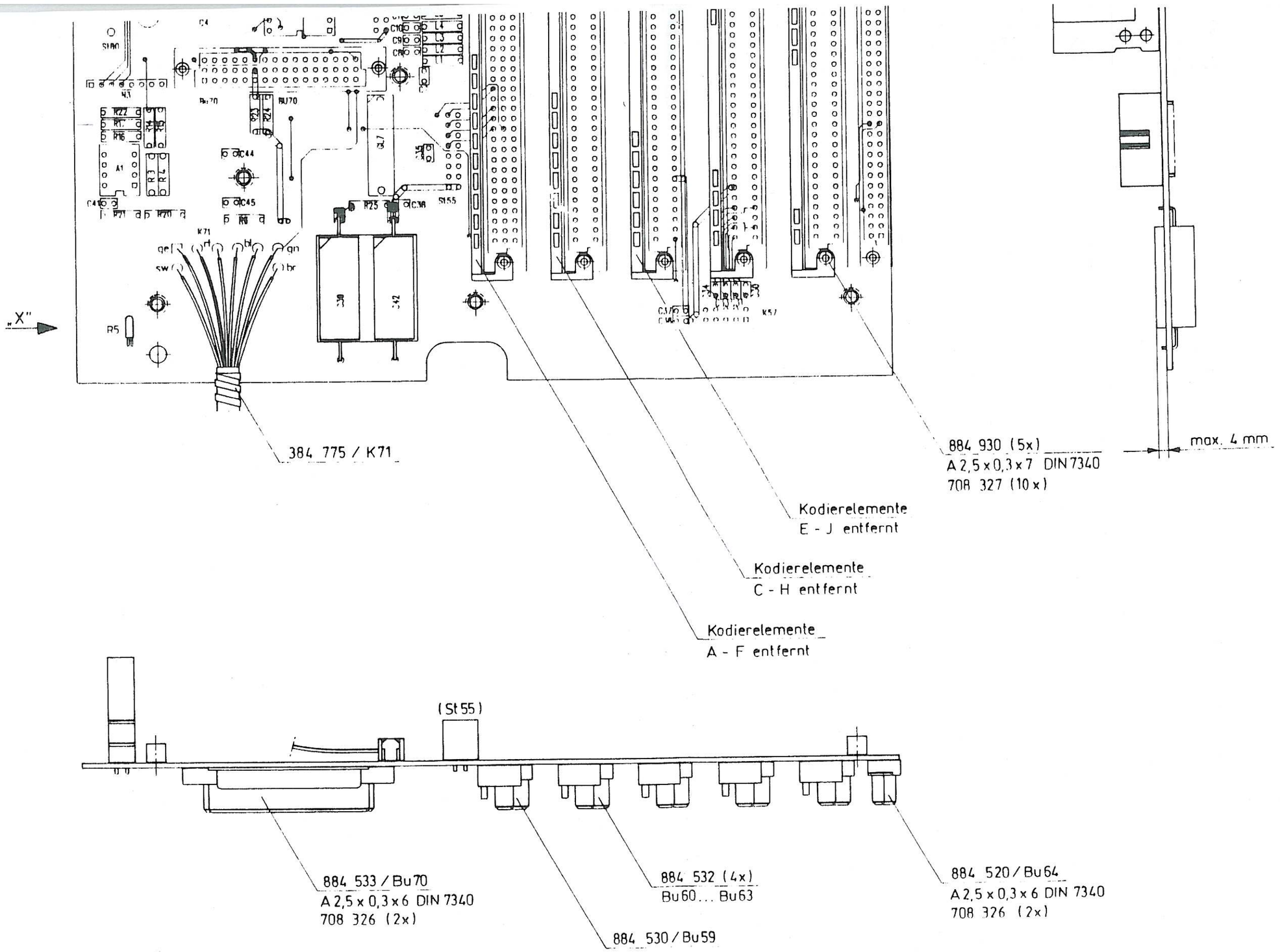

Schaltplanpositionierung = 361 137 S / Sa

9 8 7 6 5 4

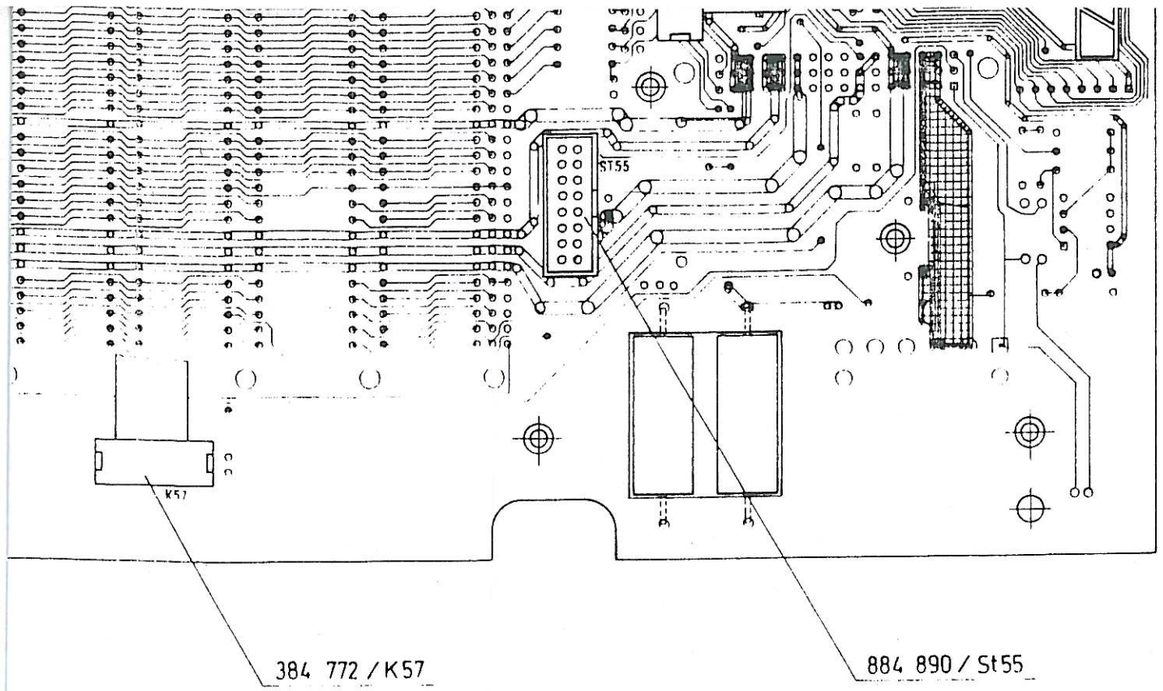

sicht „X" M 2:1

R5 mit Silicon-Kleber 761 021
umhüllt und angeklebt

Kontrollmaß
Critical measurements

Rev No	Rev Sht	Date	Name
09			
08			
07	3089.14	30.6.93	Dem.
06	2089.23	4.09.92	Unger
05	1089.70	12.9.91	Kr.
04	1089.64	7.8.91	Wi.
03	1089.54	26.6.91	Kr.
02			
01			
00			

Rohteil Initial part

Werkstoff Material

Oberfläche Surface

Freimaß
toleranzen
default
tolerance

Scale
1:1
(2:1)

DIN A2

1991	Date	Name
Drawn	26.6.91	Kr.
Designed	27.6.91	
Checked		

Schlumberger Technologies GmbH
Ingolstädter Straße 67 a
8000 München 46

Bezeichnung Description
Bestückte Leiterplatte
Typ: MOTHERBOARD

Zeichnungsnr. Drawing No
361 137 B

Gerät / Unit 4015 / 202 238

3

Diese Zeichnung ist unser Eigentum. Vervielfältigung, unbefugte Verwertung, Mitteilung an andere ist strafbar und schadenersatzpflichtig.

This drawing is the property of SCHLUMBERGER. Reproduction, unauthorized use, communication to a third party is liable to prosecution and liable for damages.

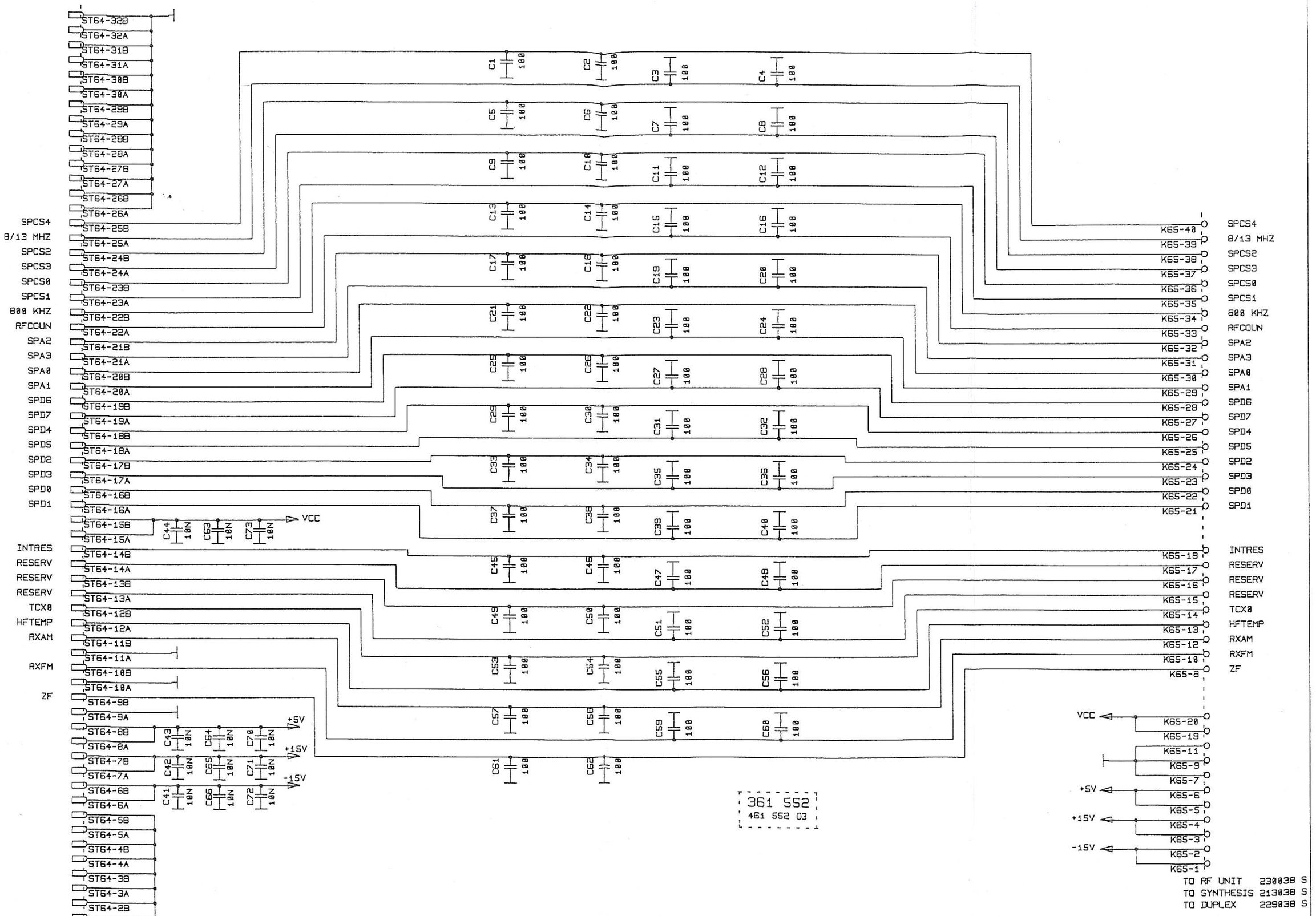

03	0089.42	18.8.90	Si	NORM.			SCHLUMBERGER TECHNOLOGIES GMBH INGOLSTÄDTER STR. 67A 8000 MÜNCHEN 46	FILTER BOARD	361 552 S BAUGRUPPE: 202 238	1 VON/OF 1
02	0089.1	15.12.89	VA	GEPR.						
04	1089.2	21.1.91	Kr.	BEARB.	10.02.89	HB			GERÄT: 4015	BLATT SHEET
INDEX ISS.	Ä.-NR. MODIF.	DATUM DATE	NAME NAME		DATUM DATE	NAME NAME				

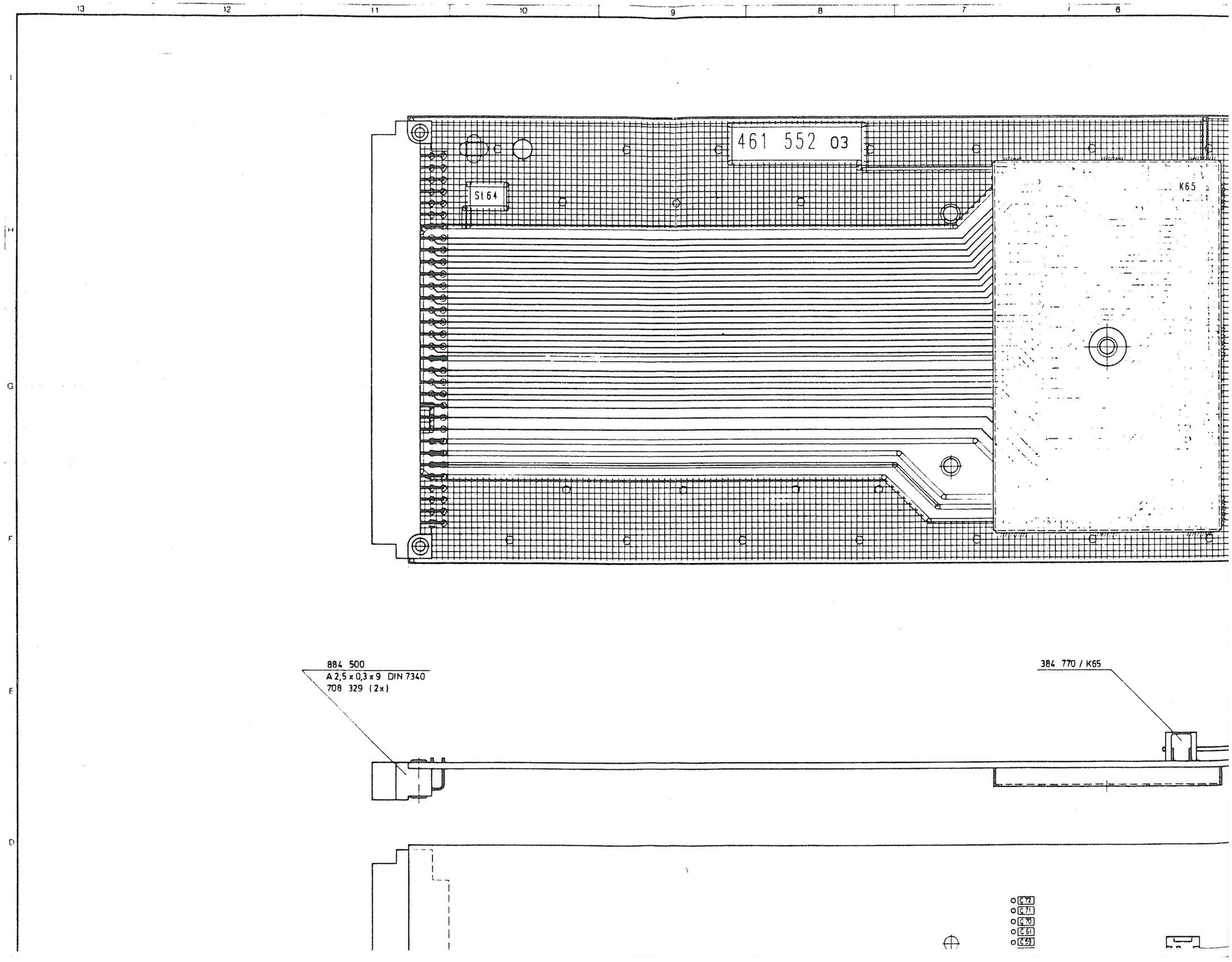
13
12
11
10
9
8
7
6
I
H
G
F
E
D
461 552 03
St 64
K65
884 500
A 2,5 x 0,3 x 9 DIN 7340
708 329 (2x)
384 770 / K65
G72
G71
G70
G61
G59

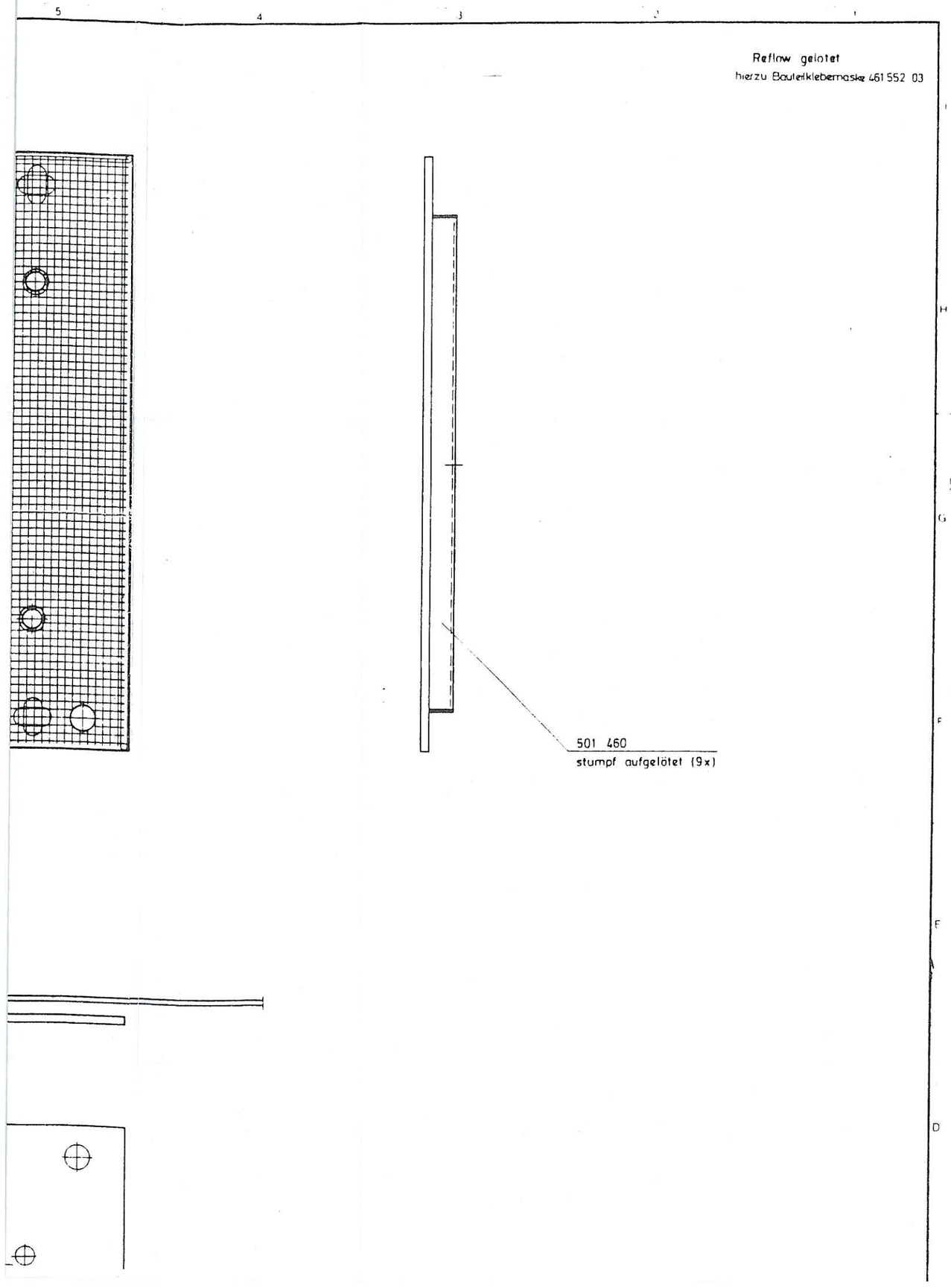
5
4
3
2
1
Reflow gelotet
hierzu Bauteilklebemaske 461 552 03
501 460
stumpf aufgelötet (9x)
H
G
F
E
D

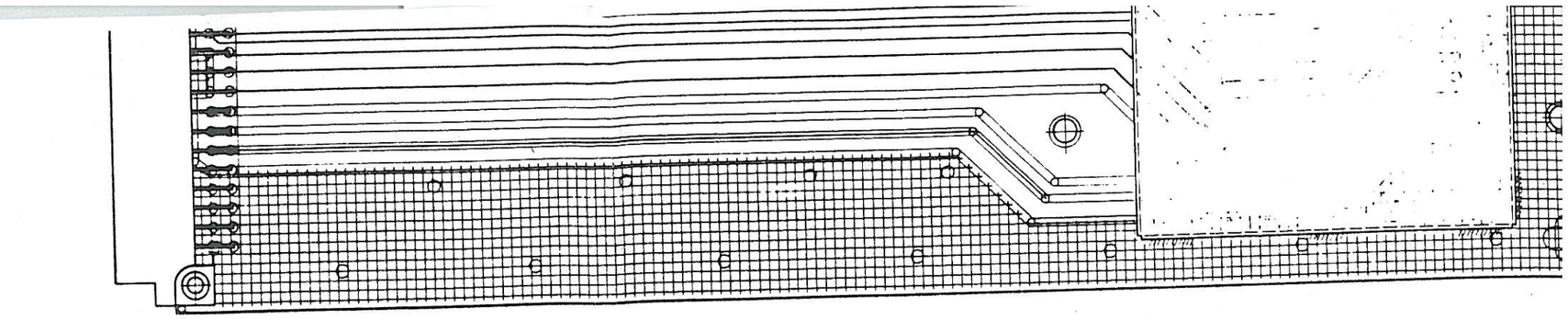

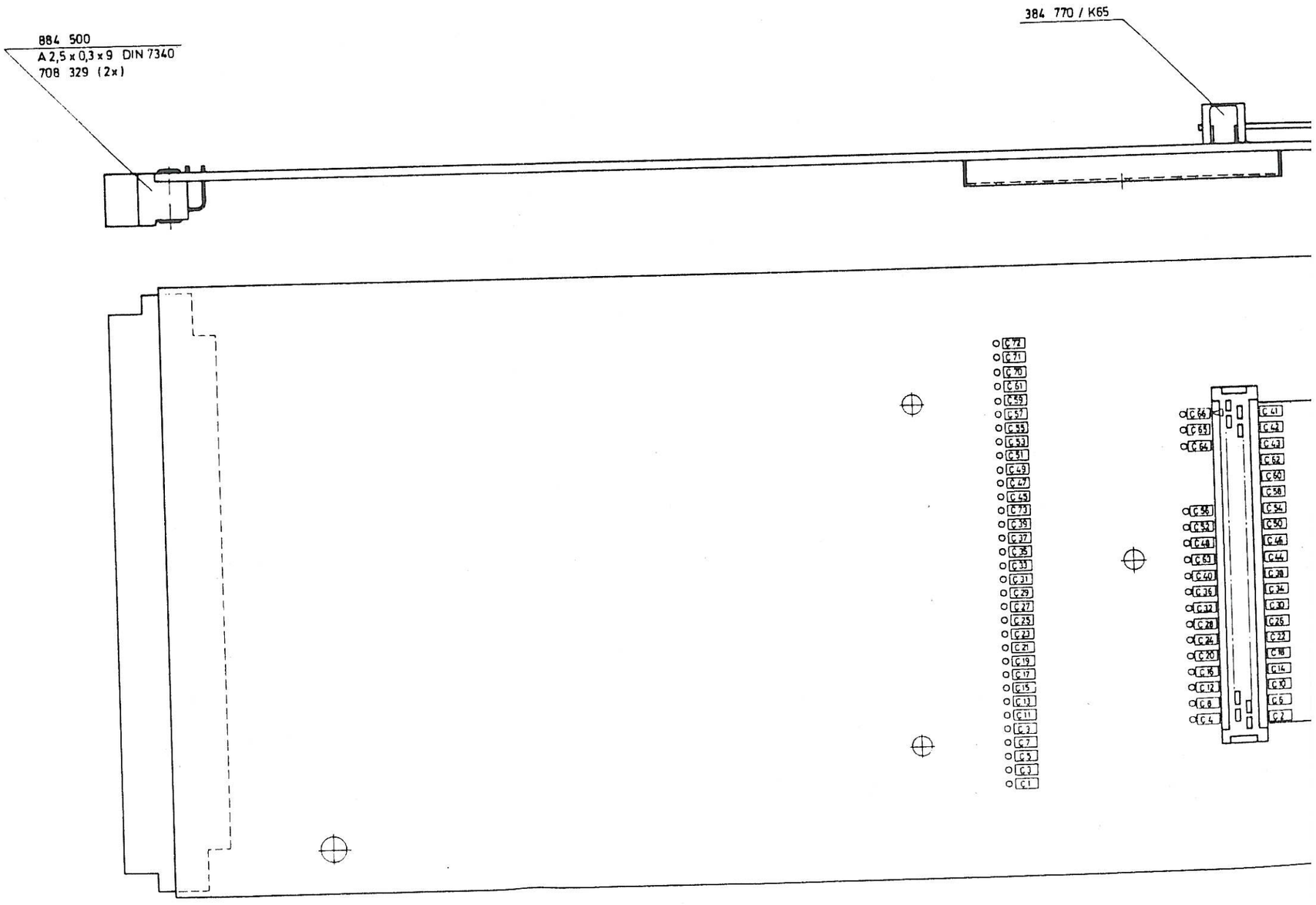

Schaltplanpositionierung = 361 552 S/Sa

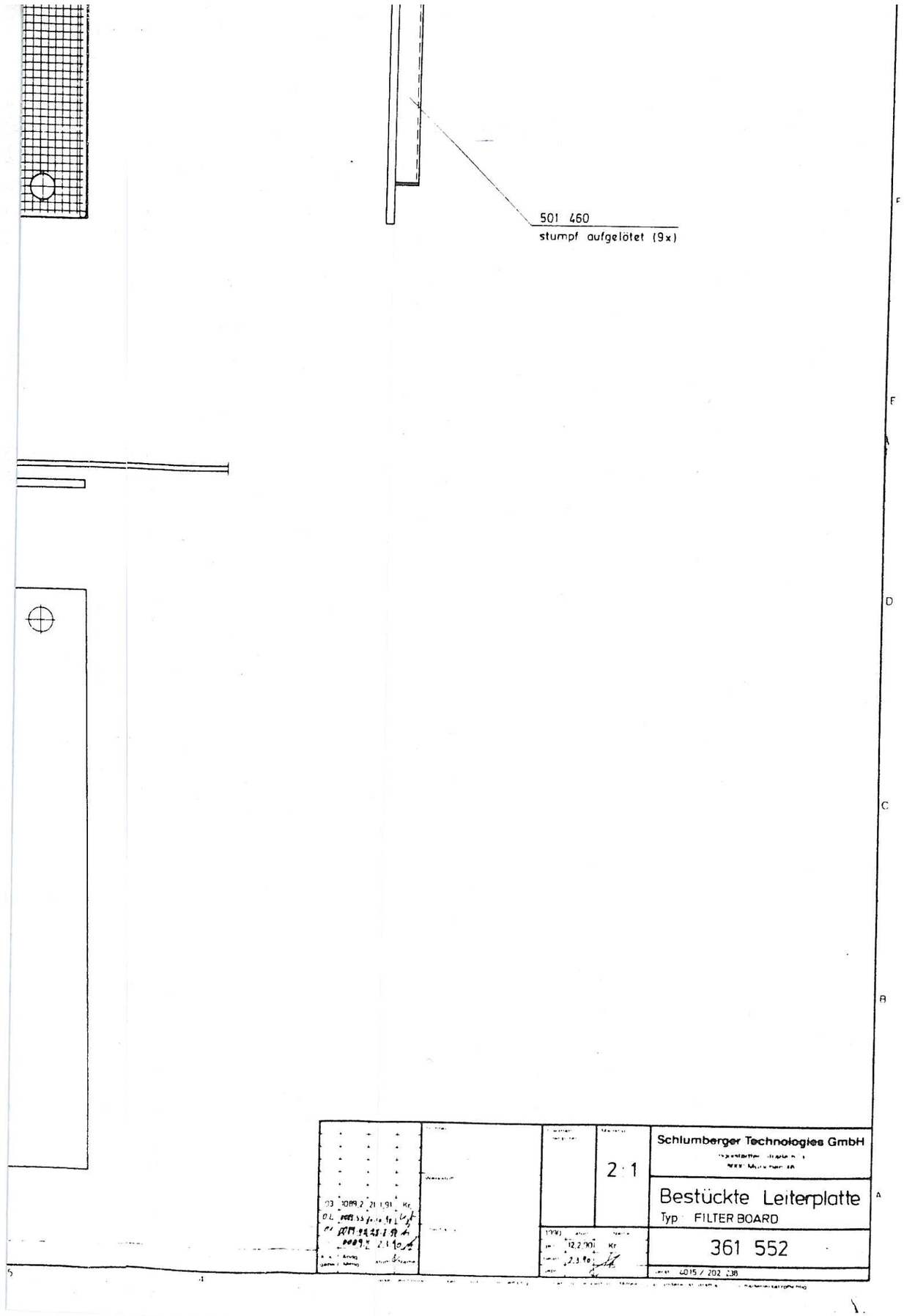
501 460
stumpf aufgelötet (9x)
F
F
D
C
B
A
2 : 1
Schlumberger Technologies GmbH
Bestückte Leiterplatte
Typ: FILTER BOARD
361 552
4015 / 202 238

1	2	3	4	5	6	7	8
Pos REF NO	Wert VALUE	Bezeichnung Schlumberger PART NO.	Hersteller MANUFACT	Pos REF NO	Wert VALUE	Bezeichnung Schlumberger PART NO	Hersteller MANUFACT
1	Bestückte Leiterplatte	361 137	STG				
	hierzu	361 137 Sa					
1	Bestückte Leiterplatte	361 552	STG				
	hierzu	361 552 Sa					
1	Graphik Display	856 106	FINLUX				
K47	HF - Kabel	382 453	STG				
K48	HF - Kabel	OPTION in 229 038					
K49	HF - Kabel	OPTION in 229 038					
K55	Kabelbaum	384 773	STG				
LS1	Lautsprecher	855 001	VAL				

Ausgabe ISSUE	Änd.-Mittig Nr MODIFIC NO	Tag DATE	Name NAME
07			
06			
05			
04			
03			
02	1089.19	21.3.91	Kr.
01	0089.76	11.12.90	Kr.
--	0089.59	12.10.	Kr.

Schlumberger Meßgeräte GmbH
Ingolstädter Straße 67 a
8000 München 46

	Tag DATE	Name NAME
1990		
geschr.	12.10.	Kr.
bearb		
gepr		

Schaltteilliste
EL. PARTS LIST

Benennung DESCRIPTION: COMMUNICATION MONITOR

Bezeichnung Schlumberger PART NO: 201 238 Sa

Hierzu Schaltplan SEE CIRCUIT DIAGRAM: 201 238 S

Gerät: 4015 / 108 901

Liste besteht LIST CONSISTS aus OF 1 Blatt SHEETS

Blatt Nr SHEET NO: 1

Pos.	Benennung	Wert	HNK-Nr.	Herst.
A1	OPV	TLC272ACP	834217	TI
BU59	Federleiste DIN 41612	96polig a/b/c	884530	SIE
BU60	Federleiste DIN 41612	64polig a/c	884532	ERNI
BU61	Federleiste DIN 41612	64polig a/c	884532	ERNI
BU62	Federleiste DIN 41612	64polig a/c	884532	ERNI
BU63	Federleiste DIN 41612	64polig a/c	884532	ERNI
BU64	Federleiste DIN 41512	64polig a/b	884520	SIE
BU70	Federleiste DIN 41612	48polig a/b/c	884533	ERNI
C1	Mini-Elko	1µF ±20% 50V-	814070	MATSU
C2	Kondensator X7R	10nF ±10% 50V-	813115	VIT
C3	Mini-Elko	1µF ±20% 50V-	814070	MATSU
C4	Mini-Elko	1µF ±20% 50V-	814070	MATSU
C5	Kondensator X7R	10nF ±10% 50V-	813115	VIT
C6	Kondensator X7R	10nF ±10% 50V-	813115	VIT
C7	Kondensator NP0	120pF ±5% 50V-	813055	VAL
C8	Kondensator NP0	120pF ±5% 50V-	813055	VAL
C9	Kondensator NP0	120pF ±5% 50V-	813055	VAL
C10	Kondensator NP0	120pF ±5% 50V-	813055	VAL
C11	Kondensator NP0	120pF ±5% 50V-	813055	VAL
C12	Kondensator NP0	120pF ±5% 50V-	813055	VAL
C13	Kondensator NP0	120pF ±5% 50V-	813055	VAL
C14	Kondensator NP0	120pF ±5% 50V-	813055	VAL
C15	Kondensator NP0	120pF ±5% 50V-	813055	VAL
C16	Kondensator NP0	120pF ±5% 50V-	813055	VAL
C17	Kondensator NP0	120pF ±5% 50V-	813055	VAL
C18	Kondensator NP0	120pF ±5% 50V-	813055	VAL
C19	Kondensator NP0	120pF ±5% 50V-	813055	VAL

Schlumberger Technologies GmbH				Schaltteilliste	Anz. d. Seiten
06 Index	1089.70 Ä.Nr.	11.9.1991 Datum	BAU Name	Bestückte Leiterplatte Typ: MOTHERBOARD	4
Erst.: UNG		Gepr.:		361 137 Sa	Seite Nr
Gerät: 4015 / 202 238					1

Pos.	Benennung	Wert	HNK-Nr.	Herst.
C20	Kondensator NP0	120pF ±5% 50V-	813055	VAL
C21	Kondensator NP0	120pF ±5% 50V-	813055	VAL
C22	Kondensator NP0	120pF ±5% 50V-	813055	VAL
C30	Kondensator NP0	120pF ±5% 50V-	813055	VAL
C31	Kondensator NP0	120pF ±5% 50V-	813055	VAL
C33	Kondensator NP0	120pF ±5% 50V-	813055	VAL
C34	Kondensator NP0	120pF ±5% 50V-	813055	VAL
C35	Kondensator X7R	10nF ±10% 50V-	813115	VIT
C36	Kondensator NP0	1nF ±5% 50V-	813066	VAL
C37	Kondensator NP0	1nF ±5% 50V-	813066	VAL
C38	Kondensator X7R	10nF ±10% 50V-	813115	VIT
C39	Elko	1000µF ±20% 16V-	814124	MATSU
C40	Kondensator X7R	10nF ±10% 50V-	813115	VIT
C41	Kondensator X7R	10nF ±10% 50V-	813115	VIT
C42	Elko	1000µF ±20% 16V-	814124	MATSU
C44	Kondensator NP0	1nF ±5% 50V-	813066	VAL
C45	Kondensator NP0	1nF ±5% 50V-	813066	VAL
D1	PIA (NMOS)	M5L8255AP-5	835027	MITSU
D2	bidir. Bustreiber	SN74LS645N	834370	TI
D3	NAND-Gatter	PC74HCT00P	834453	VAL
GL1	Diode	1N4148	830240	ITT
GL7	Silizium-Z-Diode	BZX70/C7V5	830490	VAL
L1	Drosselspule	1µH ±10%	821122	GOW
L2	Drosselspule	1µH ±10%	821122	GOW
L3	Drosselspule	1µH ±10%	821122	GOW
L4	Drosselspule	1µH ±10%	821122	GOW

Schlumberger Technologies GmbH				Schaltteilliste	Anz. d. Seiten
06 Index	1089.70 Ä.Nr.	11.9.1991 Datum	BAU Name	Bestückte Leiterplatte Typ: MOTHERBOARD	4
Erst.: UNG		Gepr.:		361 137 Sa	Seite 2
Gerät: 4015 / 202 238					

Pos.	Benennung	Wert	HNK-Nr.	Herst.
L5	Drosselspule	1µH ±10%	821122	GOW
L6	Drosselspule	1µH ±10%	821122	GOW
L7	Drosselspule	1µH ±10%	821122	GOW
L8	Drosselspule	1µH ±10%	821122	GOW
L9	Drosselspule	1µH ±10%	821122	GOW
L10	Drosselspule	1µH ±10%	821122	GOW
L11	Drosselspule	1µH ±10%	821122	GOW
L12	Drosselspule	1µH ±10%	821122	GOW
L13	Drosselspule	1µH ±10%	821122	GOW
L14	Drosselspule	1µH ±10%	821122	GOW
L15	Drosselspule	1µH ±10%	821122	GOW
L16	Drosselspule	1µH ±10%	821122	GOW
N1	Widerstandsnetzwerk	7x10kΩ ±5%	804504	DALE
N2	Widerstandsnetzwerk	7x10kΩ ±5%	804504	DALE
N3	Widerstandsnetzwerk	7x10kΩ ±5%	804504	DALE
R1	Widerstand 0.3W	10kΩ ±1%	802049	RÖD
R2	Widerstand 0.3W	10kΩ ±1%	802049	RÖD
R3	Widerstand 0.3W	3.32kΩ ±1%	802043	RÖD
R4	Widerstand 0.3W	18.2kΩ ±1%	802052	RÖD
R5	Heißleiter M85	10kΩ 10%	805013	SIE
R6	Widerstand 0.3W	475Ω ±1%	802033	RÖD
R7	Widerstand 0.3W	10kΩ ±1%	802049	RÖD
R10	Widerstand 0.3W	3.32kΩ ±1%	802043	RÖD
R12	Widerstand 0.3W	3.32kΩ ±1%	802043	RÖD
R13	Drahtbrücke	ϕ 0.6	880019	RUT
R14	Widerstand 0.3W	27.4kΩ ±1%	802054	RÖD
R15	Widerstand 0.3W	10kΩ ±1%	802049	RÖD

Schlumberger Technologies GmbH				Schaltteilliste	Anz. d. Seiten
06 Index	1089.70 Ä.Nr.	11.9.1991 Datum	BAU Name	Bestückte Leiterplatte Typ: MOTHERBOARD	4
Erst.: UNG		Gepr.:		361 137 Sa	Seite Nr
Gerät: 4015 / 202 238					3

Pos.	Benennung	Wert	HNK-Nr.	Herst.
R16	Widerstand 0.3W	4.7MΩ ±2%	802081	RÖD
R17	Widerstand 0.3W	100kΩ ±1%	802061	RÖD
R20	Widerstand 0.3W	100kΩ ±1%	802061	RÖD
R21	Widerstand 0.3W	47.5kΩ ±1%	802057	RÖD
R22	Widerstand 0.3W	47.5kΩ ±1%	802057	RÖD
R23	Widerstand 0.3W	1Ω ±2%	802001	RÖD
R24	Widerstand 0.3W	1Ω ±2%	802001	RÖD
R25	Widerstand 0.3W	1Ω ±2%	802001	RÖD
ST55	Stiftleiste (Latch)	16polig	884890	AMP
ST80	Kontaktleiste MemCard	34polig	884908	PANA
T1	PNP Transistor	2N2905	832130	TI

Schlumberger Technologies GmbH				Schaltteilliste	Anz. d. Seiten
06 Index	1089.70 Ä.Nr.	11.9.1991 Datum	BAU Name	Bestückte Leiterplatte Typ: MOTHERBOARD	4
Erst.: UNG		Gepr.:		361 137 Sa	Seite 4
Gerät: 4015 / 202 238					4

Pos.	Benennung	Wert	HNK-Nr.	Herst.
C1	Kondensator NP0	100pF ±5% 50V-	813235	VIT
C2	Kondensator NP0	100pF ±5% 50V-	813235	VIT
C3	Kondensator NP0	100pF ±5% 50V-	813235	VIT
C4	Kondensator NP0	100pF ±5% 50V-	813235	VIT
C5	Kondensator NP0	100pF ±5% 50V-	813235	VIT
C6	Kondensator NP0	100pF ±5% 50V-	813235	VIT
C7	Kondensator NP0	100pF ±5% 50V-	813235	VIT
C8	Kondensator NP0	100pF ±5% 50V-	813235	VIT
C9	Kondensator NP0	100pF ±5% 50V-	813235	VIT
C10	Kondensator NP0	100pF ±5% 50V-	813235	VIT
C11	Kondensator NP0	100pF ±5% 50V-	813235	VIT
C12	Kondensator NP0	100pF ±5% 50V-	813235	VIT
C13	Kondensator NP0	100pF ±5% 50V-	813235	VIT
C14	Kondensator NP0	100pF ±5% 50V-	813235	VIT
C15	Kondensator NP0	100pF ±5% 50V-	813235	VIT
C16	Kondensator NP0	100pF ±5% 50V-	813235	VIT
C17	Kondensator NP0	100pF ±5% 50V-	813235	VIT
C18	Kondensator NP0	100pF ±5% 50V-	813235	VIT
C19	Kondensator NP0	100pF ±5% 50V-	813235	VIT
C20	Kondensator NP0	100pF ±5% 50V-	813235	VIT
C21	Kondensator NP0	100pF ±5% 50V-	813235	VIT
C22	Kondensator NP0	100pF ±5% 50V-	813235	VIT
C23	Kondensator NP0	100pF ±5% 50V-	813235	VIT
C24	Kondensator NP0	100pF ±5% 50V-	813235	VIT
C25	Kondensator NP0	100pF ±5% 50V-	813235	VIT
C26	Kondensator NP0	100pF ±5% 50V-	813235	VIT
C27	Kondensator NP0	100pF ±5% 50V-	813235	VIT
C28	Kondensator NP0	100pF ±5% 50V-	813235	VIT
C29	Kondensator NP0	100pF ±5% 50V-	813235	VIT

Schlumberger Technologies GmbH				Schaltteilliste	Anz. d. Seiten
03 Index	0089.42 Ä.Nr.	28.08.90 Datum	Si Name	Bestückte Leiterplatte Typ: FILTER BOARD	3
Erst.: VARGA		Gepr.:		361 552 Sa	Seite Nr
Gerät: 4015 / 202 238					1

Pos.	Benennung	Wert	HNK-Nr.	Herst.
C30	Kondensator NP0	100pF ±5% 50V-	813235	VIT
C31	Kondensator NP0	100pF ±5% 50V-	813235	VIT
C32	Kondensator NP0	100pF ±5% 50V-	813235	VIT
C33	Kondensator NP0	100pF ±5% 50V-	813235	VIT
C34	Kondensator NP0	100pF ±5% 50V-	813235	VIT
C35	Kondensator NP0	100pF ±5% 50V-	813235	VIT
C36	Kondensator NP0	100pF ±5% 50V-	813235	VIT
C37	Kondensator NP0	100pF ±5% 50V-	813235	VIT
C38	Kondensator NP0	100pF ±5% 50V-	813235	VIT
C39	Kondensator NP0	100pF ±5% 50V-	813235	VIT
C40	Kondensator NP0	100pF ±5% 50V-	813235	VIT
C41	Kondensator X7R	10nF ±10% 50V-	813332	VIT
C42	Kondensator X7R	10nF ±10% 50V-	813332	VIT
C43	Kondensator X7R	10nF ±10% 50V-	813332	VIT
C44	Kondensator X7R	10nF ±10% 50V-	813332	VIT
C45	Kondensator NP0	100pF ±5% 50V-	813235	VIT
C46	Kondensator NP0	100pF ±5% 50V-	813235	VIT
C47	Kondensator NP0	100pF ±5% 50V-	813235	VIT
C48	Kondensator NP0	100pF ±5% 50V-	813235	VIT
C49	Kondensator NP0	100pF ±5% 50V-	813235	VIT
C50	Kondensator NP0	100pF ±5% 50V-	813235	VIT
C51	Kondensator NP0	100pF ±5% 50V-	813235	VIT
C52	Kondensator NP0	100pF ±5% 50V-	813235	VIT
C53	Kondensator NP0	100pF ±5% 50V-	813235	VIT
C54	Kondensator NP0	100pF ±5% 50V-	813235	VIT
C55	Kondensator NP0	100pF ±5% 50V-	813235	VIT
C56	Kondensator NP0	100pF ±5% 50V-	813235	VIT
C57	Kondensator NP0	100pF ±5% 50V-	813235	VIT
C58	Kondensator NP0	100pF ±5% 50V-	813235	VIT

Pos.	Benennung	Wert	HNK-Nr.	Herst.
C59	Kondensator NP0	100pF ±5% 50V-	813235	VIT
C60	Kondensator NP0	100pF ±5% 50V-	813235	VIT
C61	Kondensator NP0	100pF ±5% 50V-	813235	VIT
C62	Kondensator NP0	100pF ±5% 50V-	813235	VIT
C63	Kondensator X7R	10nF ±10% 50V-	813332	VIT
C64	Kondensator X7R	10nF ±10% 50V-	813332	VIT
C65	Kondensator X7R	10nF ±10% 50V-	813332	VIT
C66	Kondensator X7R	10nF ±10% 50V-	813332	VIT
C70	Kondensator X7R	10nF ±10% 50V-	813332	VIT
C71	Kondensator X7R	10nF ±10% 50V-	813332	VIT
C72	Kondensator X7R	10nF ±10% 50V-	813332	VIT
C73	Kondensator X7R	10nF ±10% 50V-	813332	VIT
ST64	Messerleiste DIN 41612	64-polig a/b	884500	SIE

Schlumberger Technologies GmbH				Schaltteilliste	Anz. d. Seiten
03 Index	0089.32 Ä.Nr.	28.08.90 Datum	Si Name	Bestückte Leiterplatte Typ: FILTER BOARD	3
Erst.: VARGA		Gepr.:		361 552 Sa	Seite Nr
Gerät: 4015 / 202 238					3

Functioning of 4015 Control Panel

The control panel consists of an analog and a digital circuit.

Digital Section

The control panel is driven by the computer entirely on the system bus (PIABUS); for this purpose there are eight data lines HPD0 through HPD7, four address lines HPA0 through HPA3 and the select line HPCS0. At powering on or when the RESET key is operated, the entire logic is initialized and the version number is newly loaded. The digital circuitry is made up of:

- keyboard logic
- rotor logic
- LED driver

Keyboard logic

Table 1 shows the complete function table of the control panel:

Table 1: Function table

No.	HPA3	HPA2	HPA1	HPA0	Function
0	0	0	0	0	40-dB amplifier *1/*100 latch
1	0	0	0	1	LED shift-register clock CLKx (see ff)
2	0	0	1	0	READ KEY CODE
3	0	0	1	1	PEEP
4	0	1	0	0	READ ROTOR CODE
5	0	1	0	1	LED shift-register STROBE STB (see ff)
6	0	1	1	0	40-dB attenuator: 1
7	0	1	1	1	40-dB attenuator: 100
>7	1	x	x	x	NOP

READ KEY CODE

The keyboard logic contains a free-running oscillator D6 with a frequency of approx. 2 kHz that generates an 8-phase clock by means of NAND gate D9 and the devices D7 and D8. This 8-phase clock is used for cyclic driving of the keys in an 8*7 matrix.

Synchronously with the 8-phase clock, multiplexer D3 is addressed so that, when a key is operated, the retriggerable monostable D1 produces a key strobe KEYSTR and a signal KEYACTIV. The KEYSTR signal triggers an interrupt on the computer causing it to go into the query routine of the keyboard, while with KEYACTIV a code corresponding to the actuated key is stored in D4, which can be read out on the system bus (READ KEY CODE). With the generation of KEYACTIV the 8-phase clock is disabled for as long as the key is actuated.

READ ROTOR CODE (spinwheel)

Rotor S61 contains two switch elements that, after integration and level shaping (R27, C63, D6 and R28, C64, D6), generate two squarewave signals A and B that are offset from one another by 90° (depending on the sense of rotation). From this the following decoder D11 forms a 4-phase signal Q0A through Q3A; two follow-up RS flipflops D12 produce from this a strobe signal ROTSTR and a signal DIRL for the sense of the rotor. The signal ROTSTR triggers an interrupt on the computer. In addition the number of ROTSTR pulses is summed as a measure of the speed of rotation. The information on the sense of rotation can be read out of register D14 on the system bus (READ ROTOR CODE).

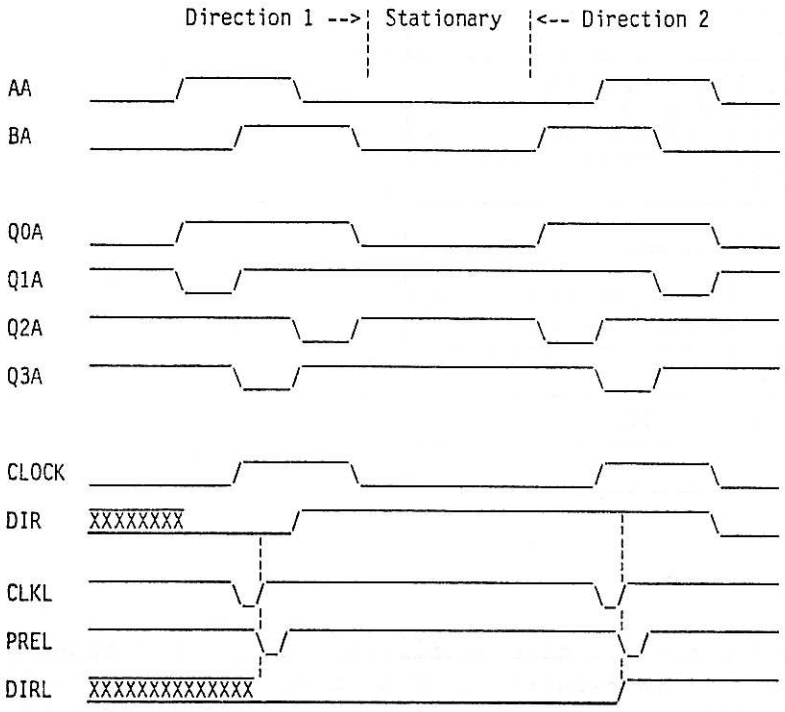

LED driver

The LEDs are driven via the shift registers D15, D16 and D17. The serial data bit Dx is set by HPD0 of the system bus; to store it in the shift register, a clock pulse CLK has to be generated. The transfer of the complete data word to the outputs of the shift registers or the LEDs is made with a strobe signal STB.

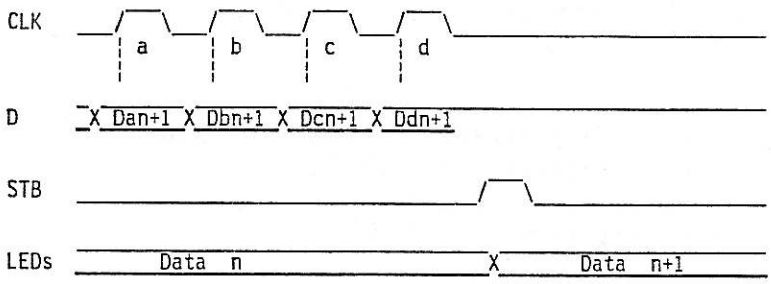

Repeated actuation of a key produces KEYSTR pulses on D1 10.

Troubleshooting on Control Interface

Insert the interface in the correct slot of the set. Switch on STABILOCK 4015 and wait until the startup procedure (illumination of all LEDs, acoustic signal) has been completed.

After this it is possible to perform functional tests according to the following diagnostics schedule. According to what happens in a functional test ("YES" or "NO"), the schedule branches to further tests.

Signals:

Squarewave signal = signal of stated frequency within signal levels "0" and "1"
"1" = signal level ≥ 2.0 V
"0" = signal level ≤ 0.8 V

Testpoints:

Dxyz a = component **D** number **xyz** pin **a**

Diagnostics Schedule

1.1 Clock signal approx. 2 kHz present?

1.1.1 Check signal path.

D6 4 approx. 2-kHz squarewave signal

Function OK?
If YES, continue with 1.1.2.
If NO, D6 defective?
R17?
C4?

1.1.2 Check signal path.

D9 8 approx. 2-kHz squarewave signal

Function OK?
If YES, continue with 1.1.3.
If NO, then

D9 9 = 1

Function OK?
If YES, D9 defective?
shortcircuit?

1.1.3 Check signal path.

Repeatedly press any key:

D3 5 squarewave signal

Function OK?
If YES, continue with 1.1.4.
If NO, key stuck?
D3 defective?
D7 defective?
D8 defective?

1.1.4 Check signal path.

Repeatedly press any key:

D4 9 squarewave signal

Function OK?
If YES, continue with 1.1.5.
If NO, D1 defective?

1.1.5 Check signal path.

Repeatedly press any key:

D1 10 squarewave signal

Function OK?
If YES, continue with 1.2.
If NO, D1 defective?

1.2 Rotor test

1.2.1 Check signal path.

Repeatedly turn rotor in any direction:

D11 2 squarewave signal

Function OK?
If YES, continue with 1.2.2.
If NO, D6 defective?
R28, R32 defective?
C64 defective?

1.2.2 Check signal path.

Repeatedly turn rotor in any direction:

D11 3 squarewave signal

Function OK?
If YES, continue with 1.2.3.
If NO, D6 defective?
R27, R33 defective?
C63 defective?

1.2.3 Check signal path.

Repeatedly turn rotor in any direction:

D12 1 squarewave signal

Function OK?
If YES, continue with 1.2.4.
If NO, D11 defective?

1.2.4 Check signal path.

Turn rotor repeatedly left and right:

D12 11 squarewave signal

Function OK?
If YES, continue with 1.2.5.
If NO, D11 defective?
D12 defective?

1.2.5 Check signal path.

Repeatedly turn rotor in any direction:

D13 5 squarewave signal

Function OK?
If YES, continue with 1.3.
If NO, D13 defective?
D6 defective?

1.3 Put entire front panel into operation

All entries must be processed correctly.

Function OK?
If YES, continue with 1.4.
If NO, D2, D5, D14 defective?

1.4 End of diagnostics

Analog Section

The analog circuitry consists of loudspeaker amplifier A2, a 1:3 divider with voltage follower A1 for voltage measurements, a 40-dB attenuator that can be cut in as required by relay RL1 and a connectible 40-dB amplifier A3 for external modulation.

AF test

To test the analog section, perform the following measurements:

Socket	Input	Gain	Connector	Output
VOLTM/SCOPE	3 Vdc	----	St67 2	1 Vdc ±20 mV
EXT MOD	1 V 10 mV/1 kHz 10 mV/150 Hz 10 mV/3.3 kHz 0 mV	*1 *100 *100 *100 *100	St57 4	1 Vdc ±10 mV 1 Vdc ±50 mV 0.7 Vdc ±0.1 V 0.7 Vdc ±0.1 V 0 V ±3 mV

MODGEN socket

Connector	Input	Attenuation	Socket	Output
St57 8	1 Vdc	0 dB -40 dB	Bu31	1 Vdc 10 mV ±0.2 mV

DEMOD socket

St57 6	Check 600-Ω insertion	Bu30

Loudspeaker amplifier

St56 26	50 mV/1 kHz	Pot. down Pot. up	St56 21	0 V ±10 mV 2.5 V ±0.2 V
Load impedance R_L = 27 Ω				

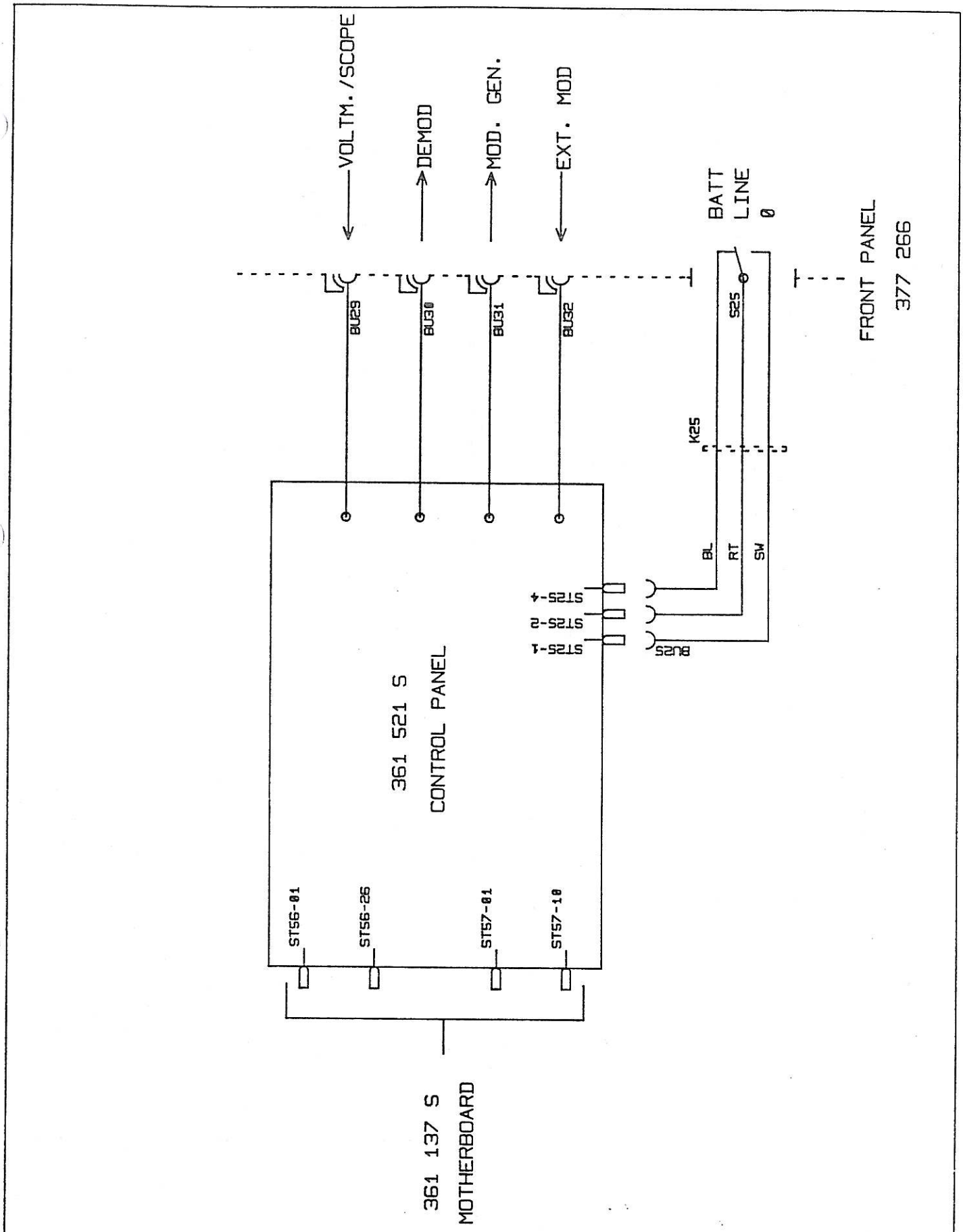

				NORM.		
01	0089.44	31.8.90	Stoff.	GEPR.		
00	0089.24	3.7.98	UNGER	BEARB.	3.7.98	UNGER
INDEX ISS.	Ä.-NR. MODIF.	DATUM DATE	NAME NAME		DATUM DATE	NAME NAME

SCHLUMBERGER TECHNOLOGIES GMBH
INGOLSTÄDTER STR. 67A
8000 MÜNCHEN 45

CONTROL PANEL

227 036 S

GERÄT: 4015

UND SCHADENERSATZPFLICHTIG.

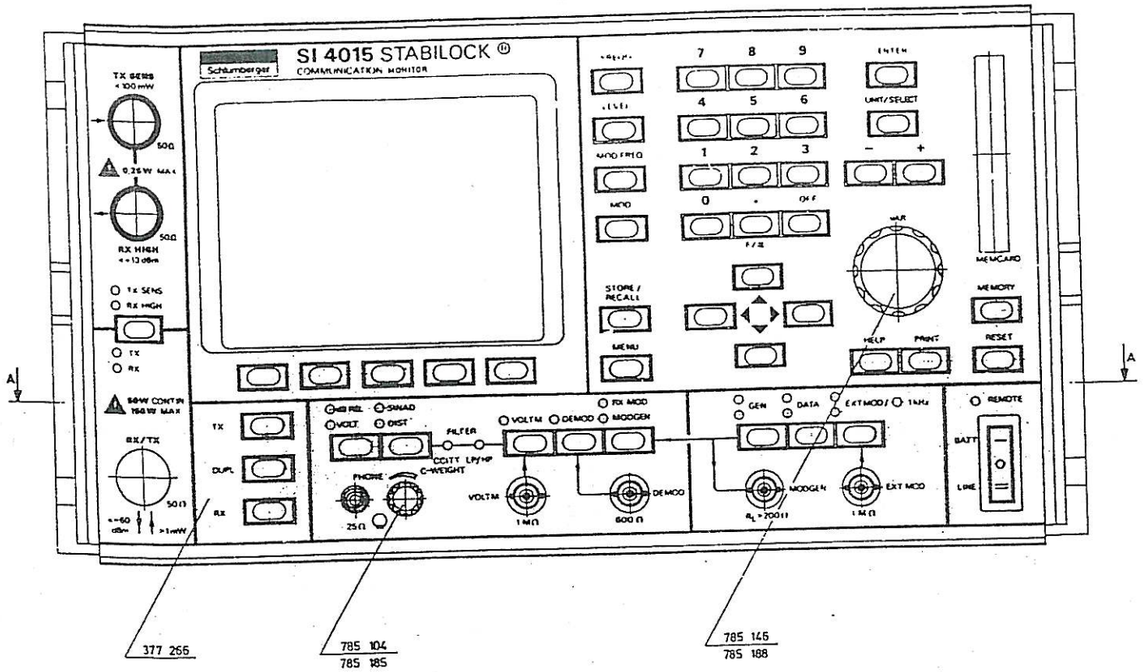

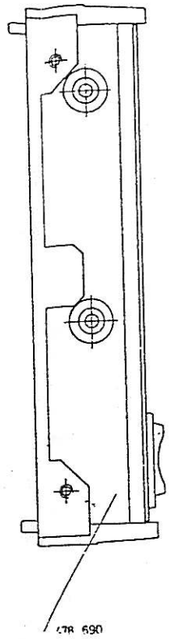

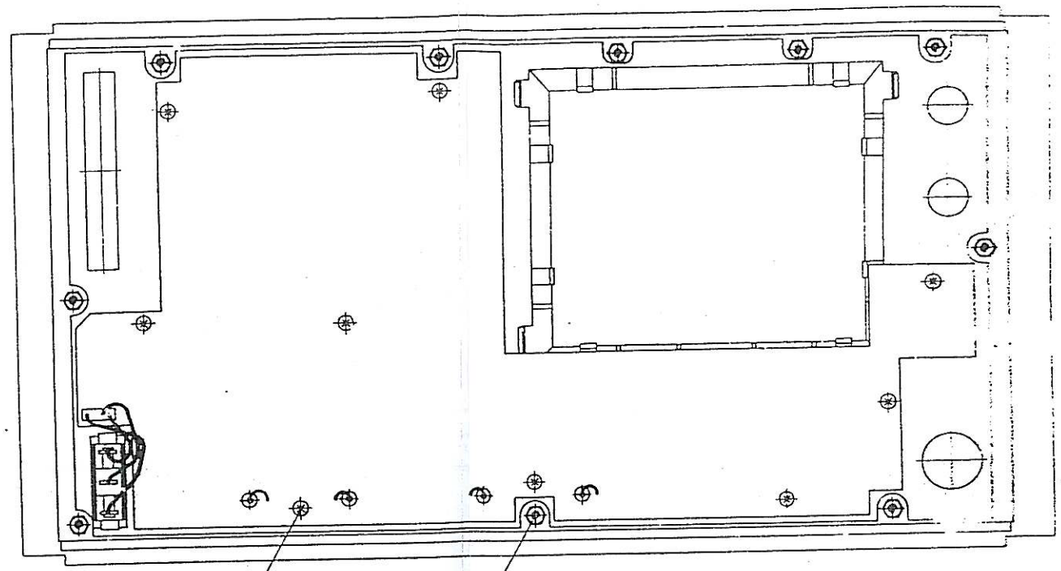

377 266

785 104
785 185

785 146
785 188

478 690

361 521
M 3 x 6 DIN 7985
701 640 (9x)

M 3 DIN 934
704 110
J 3,2 DIN 6797
706 105
10 x

Schnitt A - A

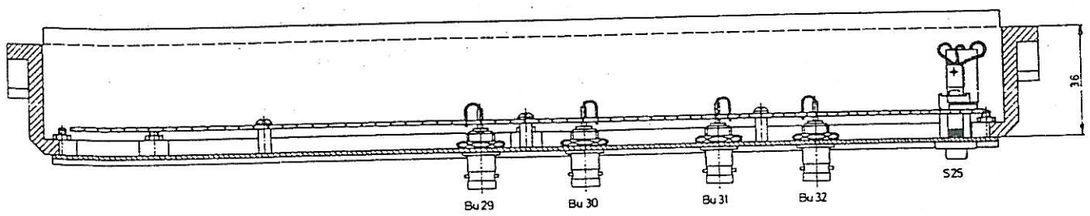

= Kontrollmaß

	002	1.1	Schlumberger Technologies GmbH
			CONTROL PANEL
			227 036

Schaltplanpositionierung - 227 036 S / Sa

CONTROL PANEL

227 030 S

FROM BU29
VOLTM/SCOPE

TO BU30
DEMOD

FROM BU32
EXT. MOD

TO BU31
MOD. GEN

AUDIO AMPLIFIER

PHONE
BU24

DATA SELECTOR
D3
PC74HC251T

A1
AD711KR

A2
LM380N-8

N1
7X22K

1	2	3	4	5	6	7	8
Pos. REF. NO.	Wert VALUE	Bezeichnung Schlumberger PART. NO.	Hersteller MANUFACT	Pos. REF. NO	Wert VALUE	Bezeichnung Schlumberger PART. NO	Hersteller MANUFACT
1	Bestückte Leiterplatte	361 521	SCHL				
	hierzu	361 521 Sa					
Bu 29	22 BNC-50-0-5	886 280	SUHN				
Bu 30	22 BNC-50-0-5	886 280	SUHN				
Bu 31	22 BNC-50-0-5	886 280	SUHN				
Bu 32	22 BNC-50-0-5	886 280	SUHN				
K 25	Kabelbaum	384 777	SCHL				

Ausgabe ISSUE	Änd.-Mittlg Nr MODIFIC NO	Tag DATE	Name NAME
07			
06			
05			
04			
03			
02			
01			
	0089.44	31.8.90	Staff

	Tag DATE	Name NAME
geschr	31.8.90	Staffler
bearb	12.9.90	
gepr		

Schlumberger Meßgeräte GmbH
Ingolstädter Straße 67a
8000 München 46

Schaltteilliste
EL. PARTS LIST

Benennung DESCRIPTION: CONTROL PANEL

Bezeichnung Schlumberger PART NO: 227 036 Sa

Hierzu Schaltplan SEE CIRCUIT DIAGRAM: 227 036 S

Gerät: 4015

Liste besteht LIST CONSISTS aus OF 1 Blatt SHEETS

Blatt Nr. SHEET NO 1

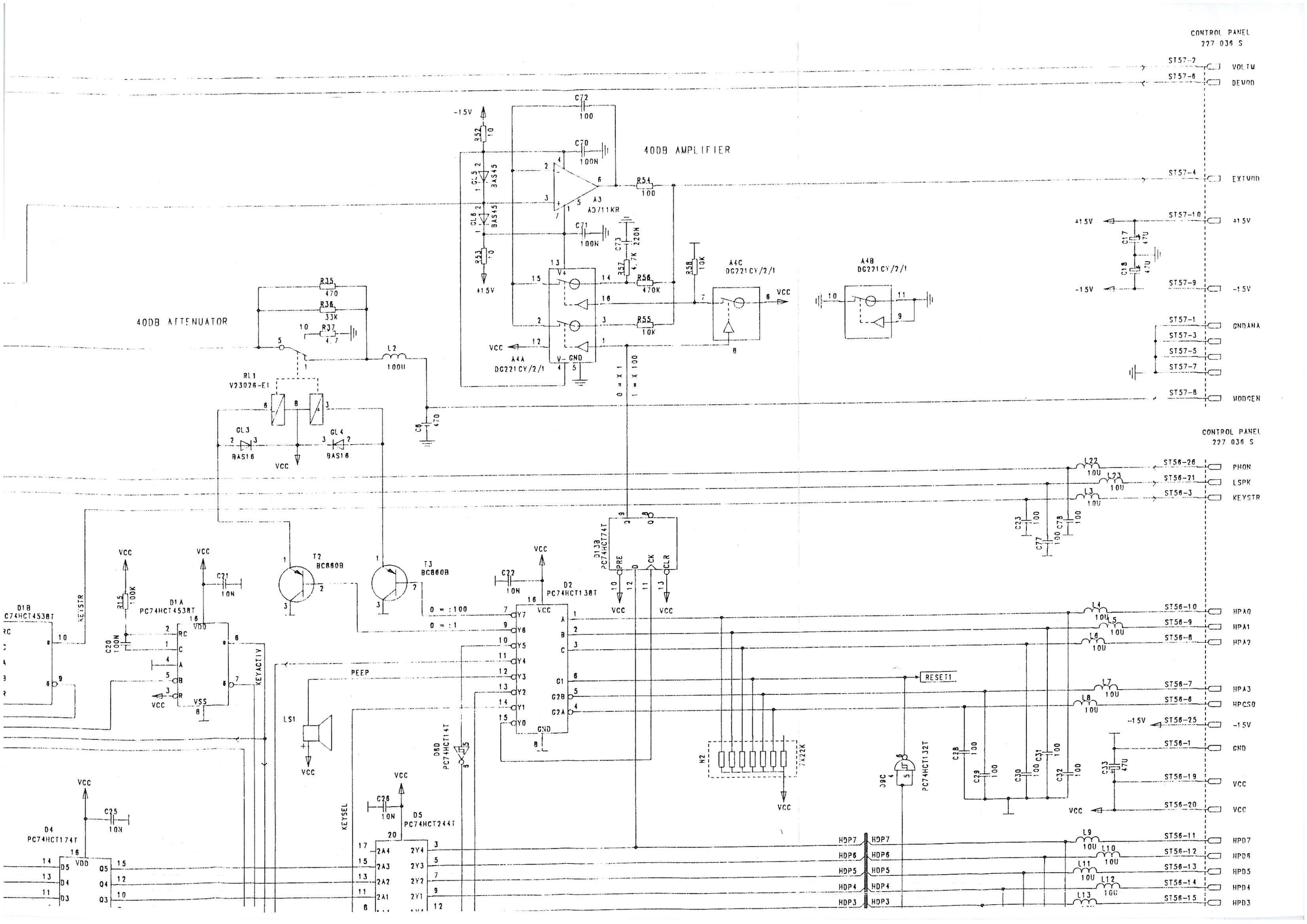

CONTROL PANEL
227 036 S
ST57-2 VOLTM
ST57-6 DEMOD
ST57-4 EXTMOD
ST57-10 +15V
ST57-9 -15V
ST57-1 GNDANA
ST57-3
ST57-5
ST57-7
ST57-8 MODGEN
40DB AMPLIFIER
40DB ATTENUATOR
A3 AD711KR
A4A DG221CY/2/1
A4B DG221CY/2/1
A4C DG221CY/2/1
RL1 V23026-E1
T2 BC860B
T3 BC860B
D1A PC74HCT4538T
D1B C74HCT4538T
D2 PC74HCT138T
D13B PC74HCT74T
D4 PC74HCT174T
D5 PC74HCT244T
D6D PC74HCT14T
D9C PC74HCT132T
LS1
PEEP
KEYSTR
KEYACTIV
KEYSEL
RESET1
CONTROL PANEL
227 036 S
ST56-26 PHON
ST56-21 LSPK
ST56-3 KEYSTR
ST56-10 HPA0
ST56-9 HPA1
ST56-8 HPA2
ST56-7 HPA3
ST56-6 HPCS0
ST56-25 -15V
ST56-1 GND
ST56-19 VCC
ST56-20 VCC
ST56-11 HPD7
ST56-12 HPD6
ST56-13 HPD5
ST56-14 HPD4
ST56-15 HPD3

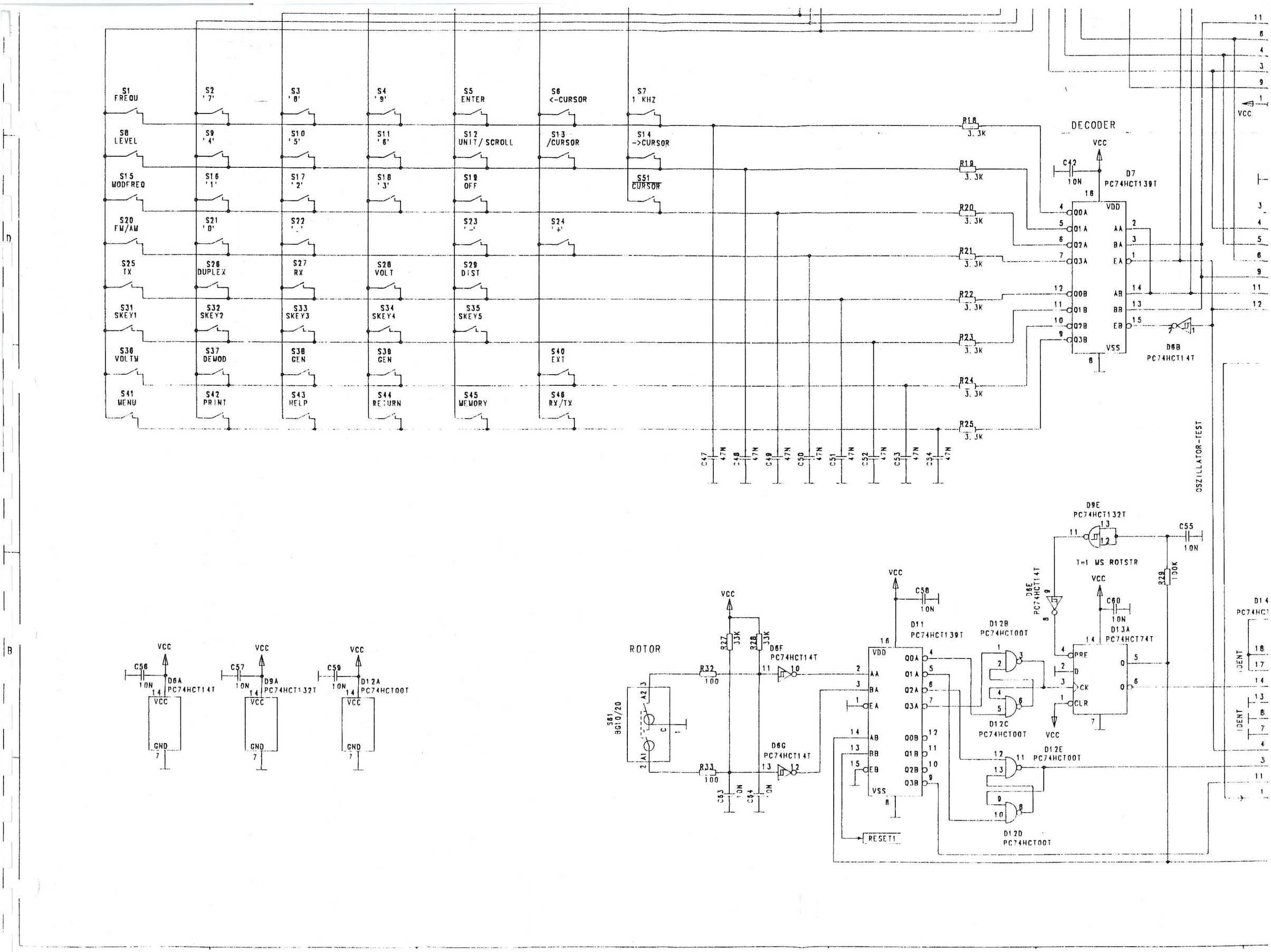

S1 FREQU
S2 '7'
S3 '8'
S4 '9'
S5 ENTER
S6 <-CURSOR
S7 1 KHZ
S8 LEVEL
S9 '4'
S10 '5'
S11 '6'
S12 UNIT/SCROLL
S13 /CURSOR
S14 ->CURSOR
S15 MODFREQ
S16 '1'
S17 '2'
S18 '3'
S19 OFF
S51 CURSOR
S20 FM/AM
S21 '0'
S22 '.'
S23 '-'
S24 '+'
S25 TX
S26 DUPLEX
S27 RX
S28 VOLT
S29 DIST
S31 SKEY1
S32 SKEY2
S33 SKEY3
S34 SKEY4
S35 SKEY5
S36 VOLTM
S37 DEMOD
S38 GEN
S39 GEN
S40 EXT
S41 MENU
S42 PRINT
S43 HELP
S44 RETURN
S45 MEMORY
S46 RX/TX
R18 3.3K
R19 3.3K
R20 3.3K
R21 3.3K
R22 3.3K
R23 3.3K
R24 3.3K
R25 3.3K
C47 47N
C48 47N
C49 47N
C50 47N
C51 47N
C52 47N
C53 47N
C54 47N
DECODER
VCC
C42 10N
D7 PC74HCT139T
VDD
VSS
D6B PC74HCT14T
OSZILLATOR-TEST
D9E PC74HCT132T
T=1 MS ROTSTR
C55 10N
R29 100K
D6E PC74HCT14T
C58 10N
C60 10N
D13A PC74HCT74T
D11 PC74HCT139T
D12B PC74HCT00T
D12C PC74HCT00T
D12E PC74HCT00T
D12D PC74HCT00T
RESET1
ROTOR
S61 BG10/20
R32 100
R33 100
R27 33K
R28 33K
D6F PC74HCT14T
D6G PC74HCT14T
C53 10N
C54 10N
C56 10N
D6A PC74HCT14T
C57 10N
D9A PC74HCT132T
C59 10N
D12A PC74HCT00T
GND
IDENT

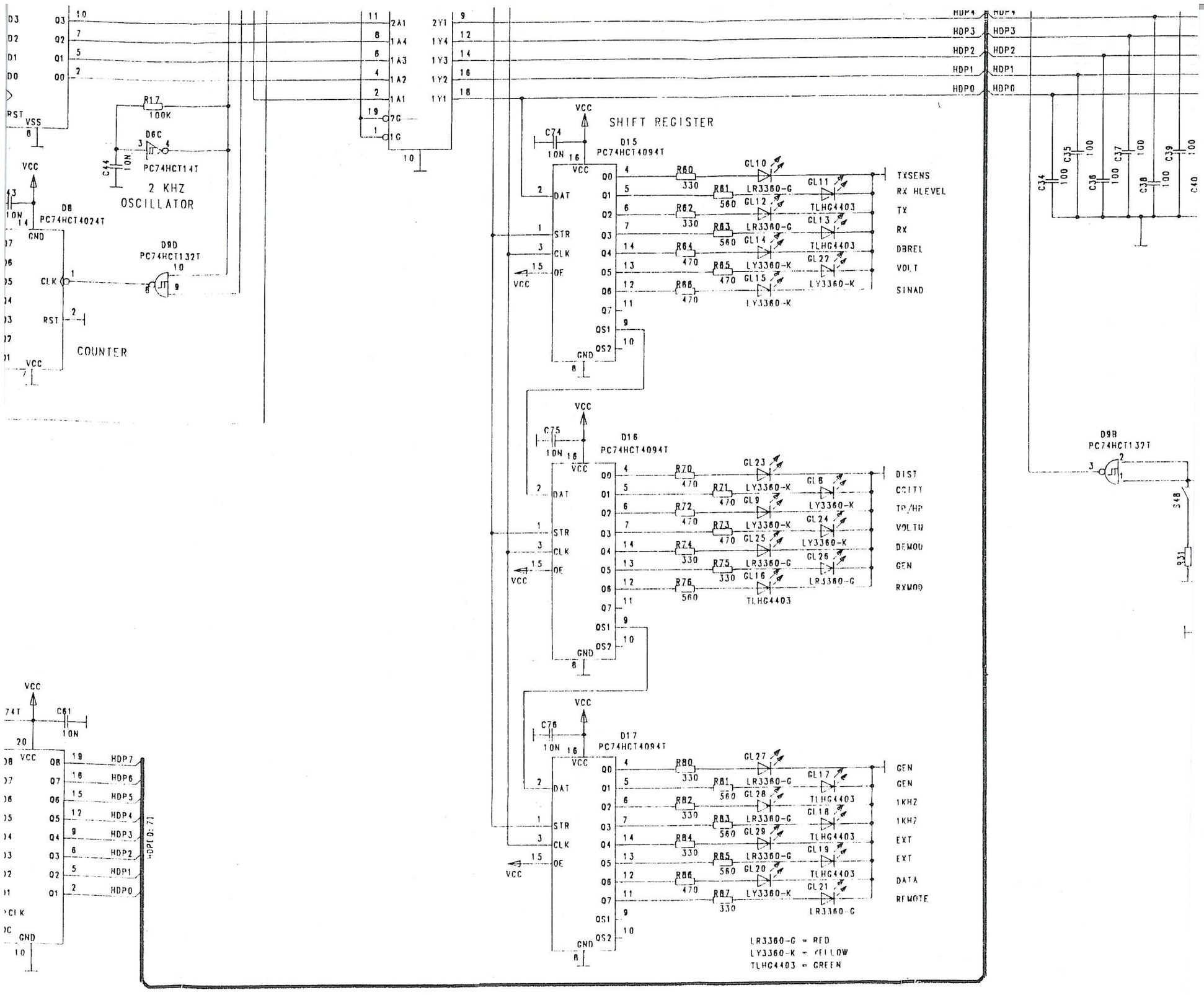

				DESIGNED			SCHLUMBERGER TECHNOLOGIES GMBH INGOLSTÄDTER STR. 67A 8000 MÜNCHEN 46
07	2089.20	8.7.91	W.	CHECKED			BEZEICHNUNG/DE
06	0089.79	17.10.91	BAU	DRAWN	06.06.89	GRIE.	CON
INDEX ISS.	Ä.-NR. MODIF.	DATUM DATE	NAME NAME		DATUM DATE	NAME NAME	

DIESE ZEICHNUNG IST UNSER EIGENTUM. VERVIELFÄLTIGUNG, UNBEFU

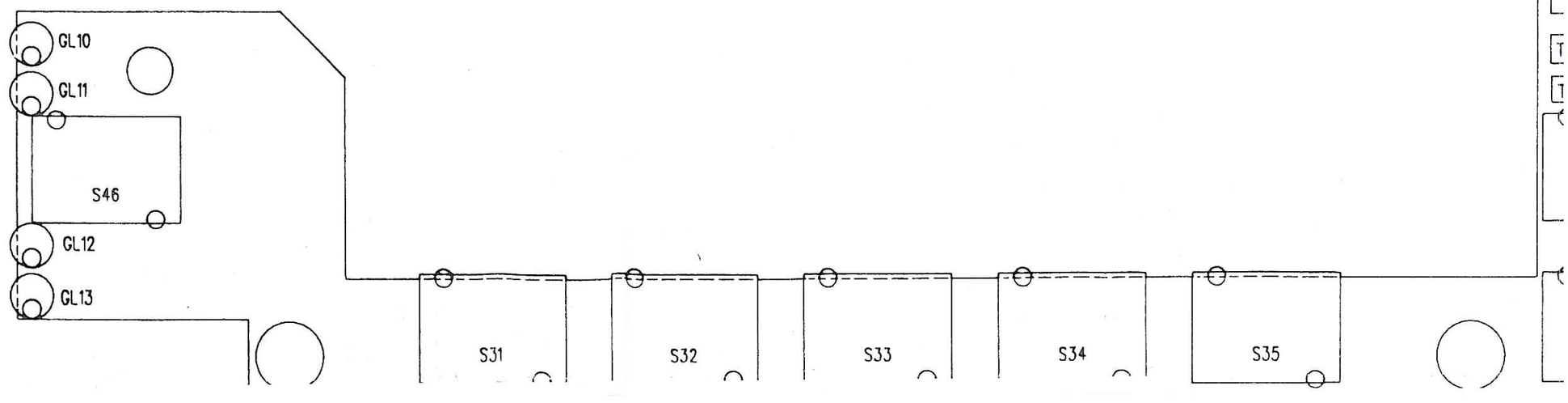
GL10
GL11
S46
GL12
GL13
S31
S32
S33
S34
S35

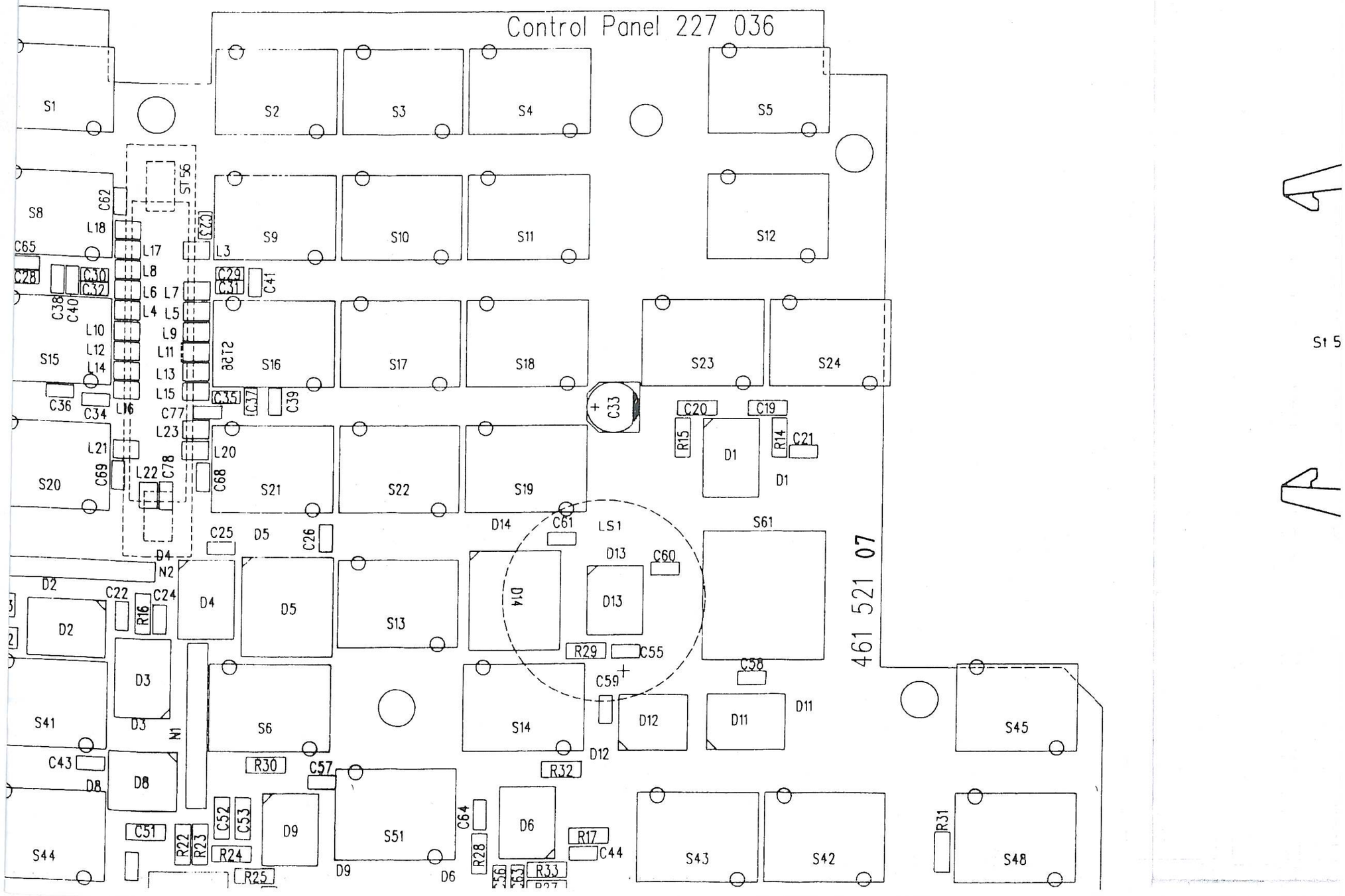
Control Panel 227 036
461 521 07
S1
S2
S3
S4
S5
S8
S9
S10
S11
S12
S15
S16
S17
S18
S23
S24
S20
S21
S22
S19
S13
S14
S6
S41
S44
S51
S43
S42
S45
S48
S61
D1
D2
D3
D4
D5
D6
D8
D9
D11
D12
D13
D14
LS1
N1
N2
ST56
C33
C61
C60
C55
C59
C58
C57
C64
C44
R29
R30
R32
R17
R28
R33
R31
R15
R14
R16
R22
R23
R24
R25
C20
C19
C21
C22
C24
C25
C26
C28
C30
C32
C34
C35
C36
C37
C38
C39
C40
C41
C43
C51
C52
C53
C62
C65
C68
C69
C77
C78
L3
L4
L5
L6
L7
L8
L9
L10
L11
L12
L13
L14
L15
L16
L17
L18
L20
L21
L22
L23

S1 5

weich gelötet
Reflow gelötet
hierzu Bauteilklebemaske 461 521 07

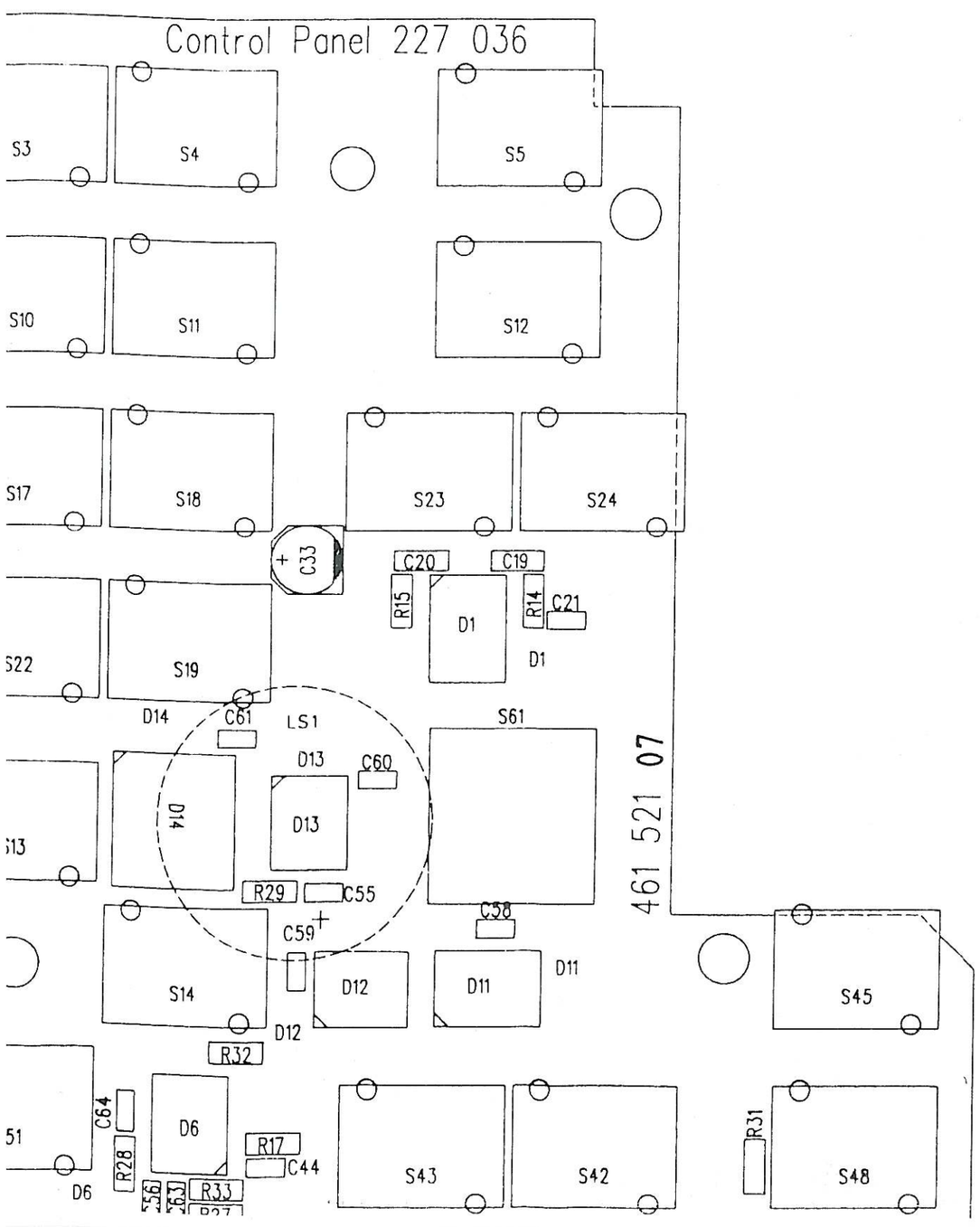

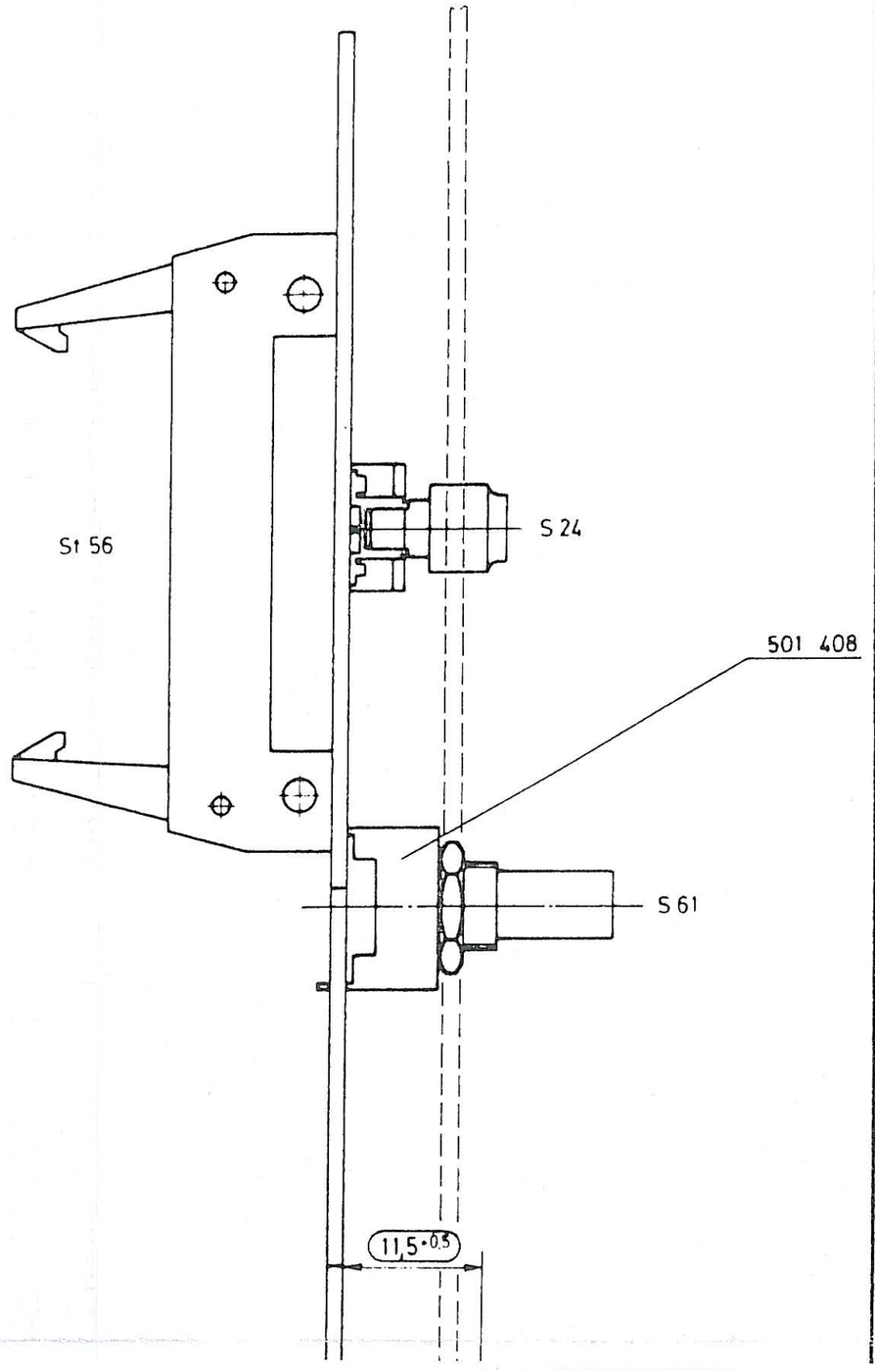

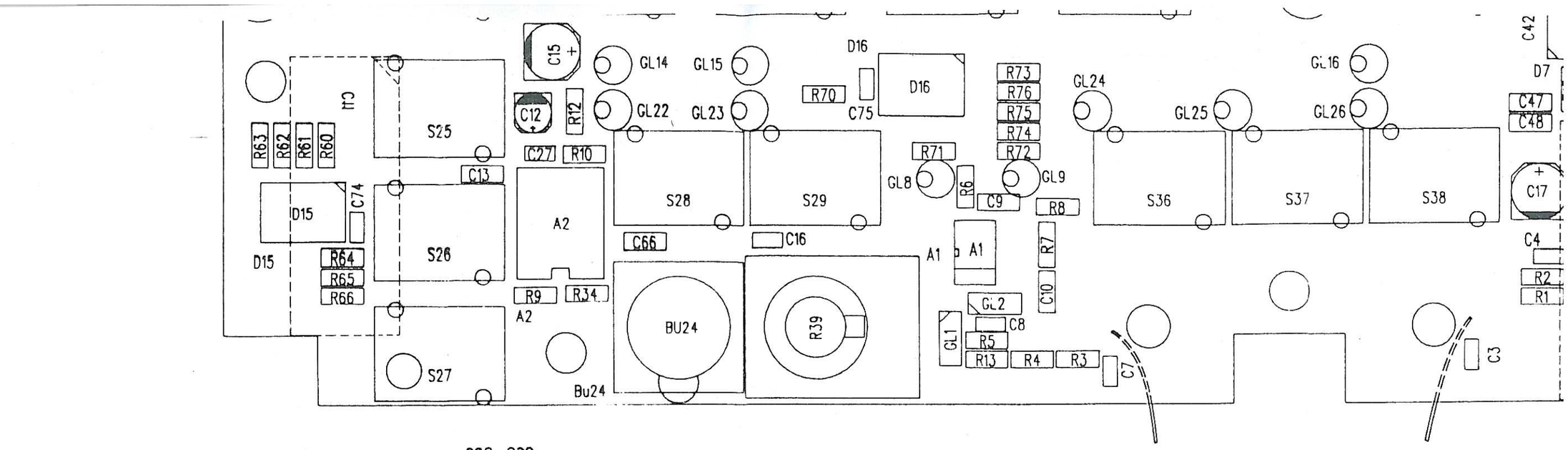
C15
GL14
GL15
D16
C42
D7
C12
R12
GL22
GL23
R70
C75
D16
R73
R76
R75
R74
R72
GL24
GL16
GL25
GL26
C47
C48
R63
R62
R61
R60
S25
C27
R10
C13
R71
GL8
R6
C9
GL9
R8
S36
S37
S38
C17
C74
D15
S28
S29
A2
C66
C16
A1
A1
R7
C4
R2
R1
D15
R64
R65
R66
S26
R9
R34
A2
BU24
R39
GL2
C8
C10
GL1
R5
R13
R4
R3
C7
C3
S27
Bu24

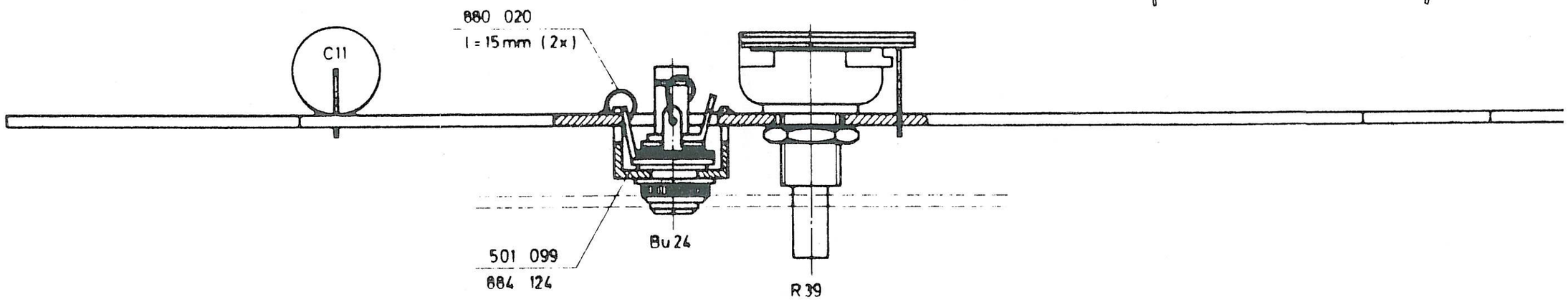
880 020
l = 15 mm (2x)
C11
Bu 24
501 099
884 124
R 39

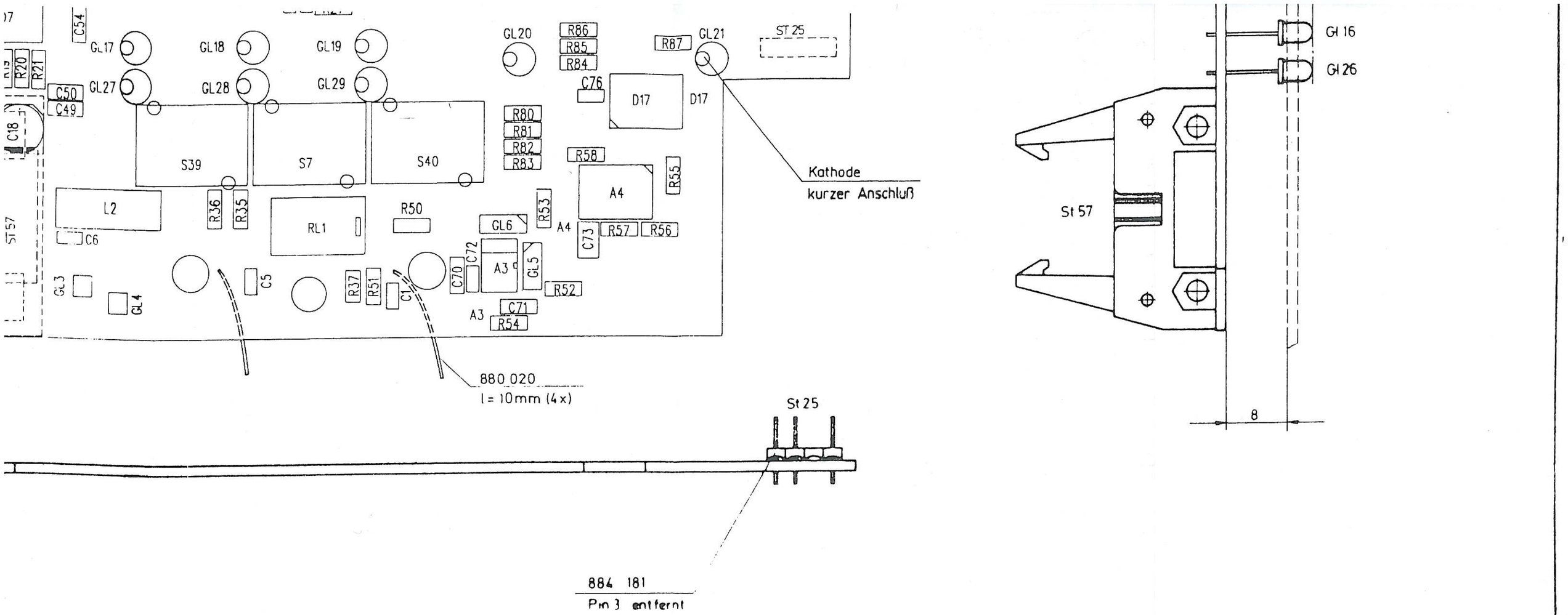

= Kontrollmaß

05	2089.20	8.07.92	Wi.
04	1089.79	22.10.91	Wi.
03	1089,53	19.6.91	Kr.
02	2089,77	7.1.91	Kr.
01	0089,44	31.8.90	Ch.

+ 0.2

2:1

1990 | 308 | Staffler | 12.9.90

Schlumberger Technologies GmbH

Bestückte Leiterplatte

Typ: CONTROL PANEL

361 521

BL 2/2

Pos.	Benennung	Wert	HNK-Nr.	Herst.
A1	OPV	AD711KR	835210	ANAL
A2	OPV	LM380N-8	835208	NS
A3	OPV	AD711KR	835210	ANAL
A4	Analog Schalter	DG211CY	834471	SILI
BU24	Klinkenbuchse	2polig 3,5mm	884124	BÜRKLIN
C1	Kondensator NP0	10pF ±5% 50V-	813223	VIT
C3	Kondensator NP0	470pF ±5% 50V-	813243	VIT
C4	Kondensator NP0	470pF ±5% 50V-	813243	VIT
C5	Kondensator NP0	470pF ±5% 50V-	813243	VIT
C6	Kondensator NP0	470pF ±5% 50V-	813243	VIT
C7	Kondensator NP0	18pF ±5% 50V-	813226	VIT
C8	Kondensator NP0	10pF ±5% 50V-	813223	VIT
C9	Kondensator X7R	100nF ±10% 50V-	813375	VIT
C10	Kondensator X7R	100nF ±10% 50V-	813375	VIT
C11	Elko	1000µF ±20% 16V-	814124	MATSU
C12	Elko	4.7µF ±20% 25V-	814372	RÖD
C13	Kondensator X7R	100nF ±10% 50V-	813375	VIT
C15	Elko	47µF ±20% 16V-	814386	RÖD
C16	Kondensator X7R	22nF ±10% 50V-	813336	VIT
C17	Elko	47µF ±20% 16V-	814386	RÖD
C18	Elko	47µF ±20% 16V-	814386	RÖD
C19	Kondensator X7R	100nF ±10% 50V-	813375	VIT
C20	Kondensator X7R	100nF ±10% 50V-	813375	VIT
C21	Kondensator X7R	10nF ±10% 50V-	813332	VIT
C22	Kondensator X7R	10nF ±10% 50V-	813332	VIT
C23	Kondensator NP0	100pF ±5% 50V-	813235	VIT
C24	Kondensator X7R	10nF ±10% 50V-	813332	VIT

Pos.	Benennung	Wert	HNK-Nr.	Herst.
C25	Kondensator X7R	10nF ±10% 50V-	813332	VIT
C26	Kondensator X7R	10nF ±10% 50V-	813332	VIT
C27	Kondensator X7R	10nF ±10% 50V-	813332	VIT
C28	Kondensator NP0	100pF ±5% 50V-	813235	VIT
C29	Kondensator NP0	100pF ±5% 50V-	813235	VIT
C30	Kondensator NP0	100pF ±5% 50V-	813235	VIT
C31	Kondensator NP0	100pF ±5% 50V-	813235	VIT
C32	Kondensator NP0	100pF ±5% 50V-	813235	VIT
C33	Elko	47µF ±20% 16V-	814386	RÖD
C34	Kondensator NP0	100pF ±5% 50V-	813235	VIT
C35	Kondensator NP0	100pF ±5% 50V-	813235	VIT
C36	Kondensator NP0	100pF ±5% 50V-	813235	VIT
C37	Kondensator NP0	100pF ±5% 50V-	813235	VIT
C38	Kondensator NP0	100pF ±5% 50V-	813235	VIT
C39	Kondensator NP0	100pF ±5% 50V-	813235	VIT
C40	Kondensator NP0	100pF ±5% 50V-	813235	VIT
C41	Kondensator NP0	100pF ±5% 50V-	813235	VIT
C42	Kondensator X7R	10nF ±10% 50V-	813332	VIT
C43	Kondensator X7R	10nF ±10% 50V-	813332	VIT
C44	Kondensator X7R	10nF ±10% 50V-	813332	VIT
C47	Kondensator X7R	47nF ±10% 50V-	813371	VIT
C48	Kondensator X7R	47nF ±10% 50V-	813371	VIT
C49	Kondensator X7R	47nF ±10% 50V-	813371	VIT
C50	Kondensator X7R	47nF ±10% 50V-	813371	VIT
C51	Kondensator X7R	47nF ±10% 50V-	813371	VIT
C52	Kondensator X7R	47nF ±10% 50V-	813371	VIT
C53	Kondensator X7R	47nF ±10% 50V-	813371	VIT
C54	Kondensator X7R	47nF ±10% 50V-	813371	VIT
C55	Kondensator X7R	10nF ±10% 50V-	813332	VIT

Pos.	Benennung	Wert	HNK-Nr.	Herst.
C56	Kondensator X7R	10nF ±10% 50V-	813332	VIT
C57	Kondensator X7R	10nF ±10% 50V-	813332	VIT
C58	Kondensator X7R	10nF ±10% 50V-	813332	VIT
C59	Kondensator X7R	10nF ±10% 50V-	813332	VIT
C60	Kondensator X7R	10nF ±10% 50V-	813332	VIT
C61	Kondensator X7R	10nF ±10% 50V-	813332	VIT
C62	Kondensator NP0	100pF ±5% 50V-	813235	VIT
C63	Kondensator X7R	10nF ±10% 50V-	813332	VIT
C64	Kondensator X7R	10nF ±10% 50V-	813332	VIT
C65	Kondensator NP0	100pF ±5% 50V-	813235	VIT
C66	Kondensator X7R	100nF ±10% 50V-	813375	VIT
C68	Kondensator NP0	100pF ±5% 50V-	813235	VIT
C69	Kondensator NP0	100pF ±5% 50V-	813235	VIT
C70	Kondensator X7R	100nF ±10% 50V-	813375	VIT
C71	Kondensator X7R	100nF ±10% 50V-	813375	VIT
C72	Kondensator NP0	100pF ±5% 50V-	813235	VIT
C73	Kondensator X7R	220nF ±10% 50V-	813379	VIT
C74	Kondensator X7R	10nF ±10% 50V-	813332	VIT
C75	Kondensator X7R	10nF ±10% 50V-	813332	VIT
C76	Kondensator X7R	10nF ±10% 50V-	813332	VIT
C77	Kondensator NP0	100pF ±5% 50V-	813235	VIT
C78	Kondensator NP0	100pF ±5% 50V-	813235	VIT
D1	Multivibrator	PC74HCT4538T	834473	VAL
D2	3:8 Decoder	PC74HCT138T	835325	VAL
D3	8:1 Multiplexer	PC74HC251T	835363	VAL
D4	6-Bit Latch	PC74HCT174T	835362	VAL
D5	Buffer	PC74HCT244T	834436	VAL
D6	Schmitt-Trigger	PC74HCT14T	835360	VAL

Pos.	Benennung	Wert	HNK-Nr.	Herst.
D7	2:4 Decoder	PC74HCT139T	834435	VAL
D8	Binary Counter	PC74HC4024T	834479	VAL
D9	NAND Schmitt-Trigger	PC74HCT132T	835361	VAL
D11	2:4 Decoder	PC74HCT139T	834435	VAL
D12	NAND-Gatter	PC74HCT00T	834430	VAL
D13	Flip-Flop	PC74HCT74T	834433	VAL
D14	8 Bit Latch	PC74HCT374T	834437	VAL
D15	Schieberegister	PC74HCT4094T	835364	VAL
D16	Schieberegister	PC74HCT4094T	835364	VAL
D17	Schieberegister	PC74HCT4094T	835364	VAL
GL1	Diode	BAS45	830554	VAL
GL2	Diode	BAS45	830554	VAL
GL3	Diode	BAS16	830552	VAL
GL4	Diode	BAS16	830552	VAL
GL5	Diode	BAS45	830554	VAL
GL6	Diode	BAS45	830554	VAL
GL8	Leuchtdiode gelb	LY3360-K	856042	OSHI
GL9	Leuchtdiode gelb	LY3360-K	856042	OSHI
GL10	Leuchtdiode rot	LR3360-G	856041	SIE
GL11	Leuchtdiode grün	TLHG4403	856044	TF
GL12	Leuchtdiode rot	LR3360-G	856041	SIE
GL13	Leuchtdiode grün	TLHG4403	856044	TF
GL14	Leuchtdiode gelb	LY3360-K	856042	OSHI
GL15	Leuchtdiode gelb	LY3360-K	856042	OSHI
GL16	Leuchtdiode grün	TLHG4403	856044	TF
GL17	Leuchtdiode grün	TLHG4403	856044	TF
GL18	Leuchtdiode grün	TLHG4403	856044	TF
GL19	Leuchtdiode grün	TLHG4403	856044	TF

Pos.	Benennung	Wert	HNK-Nr.	Herst.
GL20	Leuchtdiode gelb	LY3360-K	856042	OSHI
GL21	Leuchtdiode rot	LR3360-G	856041	SIE
GL22	Leuchtdiode gelb	LY3360-K	856042	OSHI
GL23	Leuchtdiode gelb	LY3360-K	856042	OSHI
GL24	Leuchtdiode gelb	LY3360-K	856042	OSHI
GL25	Leuchtdiode rot	LR3360-G	856041	SIE
GL26	Leuchtdiode rot	LR3360-G	856041	SIE
GL27	Leuchtdiode rot	LR3360-G	856041	SIE
GL28	Leuchtdiode rot	LR3360-G	856041	SIE
GL29	Leuchtdiode rot	LR3360-G	856041	SIE
L2	Drosselspule	100µH ±5%	821030	GOW
L3	Keramik-Spule	10µH ±10%	821239	STET
L4	Keramik-Spule	10µH ±10%	821239	STET
L5	Keramik-Spule	10µH ±10%	821239	STET
L6	Keramik-Spule	10µH ±10%	821239	STET
L7	Keramik-Spule	10µH ±10%	821239	STET
L8	Keramik-Spule	10µH ±10%	821239	STET
L9	Keramik-Spule	10µH ±10%	821239	STET
L10	Keramik-Spule	10µH ±10%	821239	STET
L11	Keramik-Spule	10µH ±10%	821239	STET
L12	Keramik-Spule	10µH ±10%	821239	STET
L13	Keramik-Spule	10µH ±10%	821239	STET
L14	Keramik-Spule	10µH ±10%	821239	STET
L15	Keramik-Spule	10µH ±10%	821239	STET
L16	Keramik-Spule	10µH ±10%	821239	STET
L17	Keramik-Spule	10µH ±10%	821239	STET
L18	Keramik-Spule	10µH ±10%	821239	STET
L20	Keramik-Spule	10µH ±10%	821239	STET

Pos.	Benennung	Wert	HNK-Nr.	Herst.
L21	Keramik-Spule	10µH ±10%	821239	STET
L22	Keramik-Spule	10µH ±10%	821239	STET
L23	Keramik-Spule	10µH ±10%	821239	STET
LS1	Piezosignalgeber	F/EB2509B	855009	DGS
N1	Widerstandsnetzwerk	7x22kΩ ±5%	804510	DALE
N2	Widerstandsnetzwerk	7x22kΩ ±5%	804510	DALE
R1	Chip-Widerstand	1.5kΩ ±1%	804739	VAL
R2	Chip-Widerstand	1kΩ ±1%	804737	VAL
R3	Chip-Widerstand	330kΩ ±1%	804767	VAL
R4	Chip-Widerstand	330kΩ ±1%	804767	VAL
R5	Chip-Widerstand	330kΩ ±1%	804767	VAL
R6	Chip-Widerstand	10Ω ±5%	804713	VAL
R7	Chip-Widerstand	10Ω ±5%	804713	VAL
R8	Chip-Widerstand	100Ω ±1%	804725	VAL
R9	Chip-Widerstand	100kΩ ±1%	804761	VAL
R10	Chip-Widerstand	3.9kΩ ±1%	804744	VAL
R12	Chip-Widerstand	4.7Ω ±5%	804709	VAL
R13	Chip-Widerstand	10kΩ ±1%	804749	VAL
R14	Chip-Widerstand	100kΩ ±1%	804761	VAL
R15	Chip-Widerstand	100kΩ ±1%	804761	VAL
R16	Chip-Widerstand	10kΩ ±1%	804749	VAL
R17	Chip-Widerstand	100kΩ ±1%	804761	VAL
R18	Chip-Widerstand	3.3kΩ ±1%	804743	VAL
R19	Chip-Widerstand	3.3kΩ ±1%	804743	VAL
R20	Chip-Widerstand	3.3kΩ ±1%	804743	VAL
R21	Chip-Widerstand	3.3kΩ ±1%	804743	VAL
R22	Chip-Widerstand	3.3kΩ ±1%	804743	VAL

Pos.	Benennung	Wert	HNK-Nr.	Herst.
R23	Chip-Widerstand	3.3kΩ ±1%	804743	VAL
R24	Chip-Widerstand	3.3kΩ ±1%	804743	VAL
R25	Chip-Widerstand	3.3kΩ ±1%	804743	VAL
R27	Chip-Widerstand	33kΩ ±1%	804755	VAL
R28	Chip-Widerstand	33kΩ ±1%	804755	VAL
R29	Chip-Widerstand	100kΩ ±1%	804761	VAL
R30	Chip-Widerstand	10kΩ ±1%	804749	VAL
R31	Chip-Widerstand	100Ω ±1%	804725	VAL
R32	Chip-Widerstand	100Ω ±1%	804725	VAL
R33	Chip-Widerstand	100Ω ±1%	804725	VAL
R34	Chip-Widerstand	27Ω ±5%	804718	VAL
R35	Chip-Widerstand	470Ω ±1%	804733	VAL
R36	Chip-Widerstand	33kΩ ±1%	804755	VAL
R37	Minimelf-Widerstand	4.7Ω ±1%	802809	BEY
R39	Potentiometer pos.log.	47kΩ ±20% 0.15W	807051	RUF
R50	Chip-Widerstand	10kΩ ±1%	804749	VAL
R51	Chip-Widerstand	1MΩ ±1%	804773	VAL
R52	Chip-Widerstand	10Ω ±5%	804713	VAL
R53	Chip-Widerstand	10Ω ±5%	804713	VAL
R54	Chip-Widerstand	100Ω ±1%	804725	VAL
R55	Chip-Widerstand	10kΩ ±1%	804749	VAL
R56	Chip-Widerstand	470kΩ ±1%	804769	VAL
R57	Chip-Widerstand	4.7kΩ ±1%	804745	VAL
R58	Chip-Widerstand	10kΩ ±1%	804749	VAL
R60	Chip-Widerstand	330Ω ±1%	804731	VAL
R61	Chip-Widerstand	560Ω ±1%	804734	VAL
R62	Chip-Widerstand	330Ω ±1%	804731	VAL
R63	Chip-Widerstand	560Ω ±1%	804734	VAL
R64	Chip-Widerstand	470Ω ±1%	804733	VAL

Pos.	Benennung	Wert	HNK-Nr.	Herst.
R65	Chip-Widerstand	470Ω ±1%	804733	VAL
R66	Chip-Widerstand	470Ω ±1%	804733	VAL
R70	Chip-Widerstand	470Ω ±1%	804733	VAL
R71	Chip-Widerstand	470Ω ±1%	804733	VAL
R72	Chip-Widerstand	470Ω ±1%	804733	VAL
R73	Chip-Widerstand	470Ω ±1%	804733	VAL
R74	Chip-Widerstand	330Ω ±1%	804731	VAL
R75	Chip-Widerstand	330Ω ±1%	804731	VAL
R76	Chip-Widerstand	560Ω ±1%	804734	VAL
R80	Chip-Widerstand	330Ω ±1%	804731	VAL
R81	Chip-Widerstand	560Ω ±1%	804734	VAL
R82	Chip-Widerstand	330Ω ±1%	804731	VAL
R83	Chip-Widerstand	560Ω ±1%	804734	VAL
R84	Chip-Widerstand	330Ω ±1%	804731	VAL
R85	Chip-Widerstand	560Ω ±1%	804734	VAL
R86	Chip-Widerstand	470Ω ±1%	804733	VAL
R87	Chip-Widerstand	330Ω ±1%	804731	VAL
RL1	SMD-Relais MRP1	V23026-E1	843300	SIE
S1	Taste dunkelgrau	ohne Zeichen	841376	MARQ
S2	Taste dunkelgrau	ohne Zeichen	841376	MARQ
S3	Taste dunkelgrau	ohne Zeichen	841376	MARQ
S4	Taste dunkelgrau	ohne Zeichen	841376	MARQ
S5	Taste dunkelgrau	ohne Zeichen	841376	MARQ
S6	Taste dunkelgrau	ohne Zeichen	841376	MARQ
S7	Taste dunkelgrau	ohne Zeichen	841376	MARQ
S8	Taste dunkelgrau	ohne Zeichen	841376	MARQ
S9	Taste dunkelgrau	ohne Zeichen	841376	MARQ
S10	Taste dunkelgrau	ohne Zeichen	841376	MARQ

Pos.	Benennung	Wert	HNK-Nr.	Herst.
S11	Taste dunkelgrau	ohne Zeichen	841376	MARQ
S12	Taste dunkelgrau	ohne Zeichen	841376	MARQ
S13	Taste dunkelgrau	ohne Zeichen	841376	MARQ
S14	Taste dunkelgrau	ohne Zeichen	841376	MARQ
S15	Taste dunkelgrau	ohne Zeichen	841376	MARQ
S16	Taste dunkelgrau	ohne Zeichen	841376	MARQ
S17	Taste dunkelgrau	ohne Zeichen	841376	MARQ
S18	Taste dunkelgrau	ohne Zeichen	841376	MARQ
S19	Taste dunkelgrau	ohne Zeichen	841376	MARQ
S20	Taste dunkelgrau	ohne Zeichen	841376	MARQ
S21	Taste dunkelgrau	ohne Zeichen	841376	MARQ
S22	Taste dunkelgrau	ohne Zeichen	841376	MARQ
S23	Taste dunkelgrau	ohne Zeichen	841376	MARQ
S24	Taste dunkelgrau	ohne Zeichen	841376	MARQ
S25	Taste rot	ohne Zeichen	841374	MARQ
S26	Taste gelb	ohne Zeichen	841337	MARQ
S27	Taste grün	ohne Zeichen	841336	MARQ
S28	Taste dunkelgrau	ohne Zeichen	841376	MARQ
S29	Taste dunkelgrau	ohne Zeichen	841376	MARQ
S31	Taste dunkelgrau hoch	ohne Zeichen	894143	STG
S32	Taste dunkelgrau hoch	ohne Zeichen	894143	STG
S33	Taste dunkelgrau hoch	ohne Zeichen	894143	STG
S34	Taste dunkelgrau hoch	ohne Zeichen	894143	STG
S35	Taste dunkelgrau hoch	ohne Zeichen	894143	STG
S36	Taste dunkelgrau	ohne Zeichen	841376	MARQ
S37	Taste dunkelgrau	ohne Zeichen	841376	MARQ
S38	Taste dunkelgrau	ohne Zeichen	841376	MARQ
S39	Taste dunkelgrau	ohne Zeichen	841376	MARQ
S40	Taste dunkelgrau	ohne Zeichen	841376	MARQ

Schlumberger Technologies GmbH				Schaltteilliste	Anz. d. Seiten
04 Index	0089.77 Ä.Nr.	17.12.1990 Datum	METZ Name	Bestückte Leiterplatte Typ: CONTROL PANEL	10
Erst.: BAU		Gepr.:		361 521 Sa	Seite Nr
Gerät: 4015/227 036					9

Pos.	Benennung	Wert	HNK-Nr.	Herst.
S41	Taste blau	ohne Zeichen	841375	MARQ
S42	Taste dunkelgrau	ohne Zeichen	841376	MARQ
S43	Taste dunkelgrau	ohne Zeichen	841376	MARQ
S44	Taste dunkelgrau	ohne Zeichen	841376	MARQ
S45	Taste dunkelgrau	ohne Zeichen	841376	MARQ
S46	Taste dunkelgrau	ohne Zeichen	841376	MARQ
S48	Taste dunkelgrau	ohne Zeichen	841376	MARQ
S51	Taste dunkelgrau	ohne Zeichen	841376	MARQ
S61	Drehgeber	BG10/20	847003	SEL
ST25	Wire-Wrap Stiftleiste	4polig	884181	COM
ST56	Stiftleiste gerade	26polig	884447	AMP
ST57	Stiftleiste gerade	10polig	884446	AMP
T2	PNP Transistor	BC860B	832285	VAL
T3	PNP Transistor	BC860B	832285	VAL

Schlumberger Technologies GmbH				Schaltteilliste	Anz. d. Seiten
04 Index	0089.77 Ä.Nr.	17.12.1990 Datum	METZ Name	Bestückte Leiterplatte Typ: CONTROL PANEL	10
Erst.: BAU		Gepr.:		361 521 Sa	Seite Nr.
Gerät: 4015/227 036					10

D A N G E R !!! VOLTAGE PULSES OF UP TO 200 VAC ARE GENERATED IN THE DISPLAY. DO NOT TAMPER WITH THE DISPLAY DURING OPERATION !!!

Technology of Electroluminescent Display

The luminescent material is embedded between two insulating layers, which bear conducting electrodes that are at right angles to one another. This 2-µm-thick thinfilm structure is deposited on a glass substrate. There is a further glass plate laminated onto the rear as protection.

Each crossover of the electrodes is an addressable picture element. The display used in the 4015 has 320 columns and 256 rows. The connections of the electrodes alternate on different sides and are connected to the driver by flexible tracks: odd columns at the top, even columns at the bottom, odd rows on the left, even rows on the right.

Light is emitted when an AC voltage of approx. 160 V occurs on a crossover. With each change of polarity a light pulse is generated. The orange luminescent color corresponds to an optical wavelength of 580 nm (the filter glass in the display frame is suitably adapted). The luminous intensity reduces in the temperature range from -25 to 65°C by up to 10% and after approx. 10000 operating hours (13.7 months of continuous operation) by maximally 20%. After that the loss of brightness is less.

Control Electronics

The driving and the actual display come as a complete unit. This is composed of two circuit boards using SMT components for the most part.

The DRIVER BOARD includes special integrated latch circuits. One layer of the multilayer is used as a shielding ground and is electrically connected to the mechanical attachment. In this way the electrical reradiation of the internal switch-mode power supply to the exterior is suppressed. Older displays without the "EMI" index require a mechanical shielding ground between the boards.

The CONTROLLER POWER UNIT board bears the DC/DC converters, driver circuits and the input connector for serial driving plus the two supply voltages:

VID	Video data
VCLK	Video clock
HS	Horizontal synchronization
VS	Vertical synchronization
V_{CC1}	+5 V, < 0.1 A, logic supply voltage
V_{CC2}	+15 V, < 0.5 A, display supply voltage

Picture Buildup

The column voltage is first simultaneously applied only to those column electrodes whose picture elements are to illuminate in the first row. Then only the first row is supplied with voltage. After that all electrodes are switched to ground potential.
This sequence is repeated for each row of a picture. After the last row a reset pulse is applied simultaneously to all rows, all columns remaining on ground.

If there is a fault, like dark rows or columns, this may also be due to the driving by the 4015 computer. For clear diagnosis it is therefore advisable to make a trial replacement of the display or the computer. The display does not have to be disassembled mechanically, only the computer has to be exchanged. In the case of the display, undo connecting cables from the motherboard and connect another display.

If you return a defective display, please enclose a written description of the fault.

Functional Description

1. Principle of RF Power Protection

The RF Power Protection guards the 4015 RF Unit against destruction for the event that the user mistakenly applies too much RF power to one of the two STABILOCK sockets TX SENS or RX HIGH. Limiter diodes immediately reduce the RF power to a level that is harmless. At high power an exchangeable fusible cutout also responds and isolates the RF path.

There are two RF Power Protection units incorporated in a 4015, between the front-panel socket TX SENS and the sensitive input and between the front-panel socket RX HIGH and the unprotected RX output. The RF socket is already protected by the power attenuator.

2. RF Characteristics of RF Power Protection

The unit is suitable for frequencies from 100 kHz to 1 GHz.

Up to 1 GHz the RF matching of > 20 dB and the insertion loss of < 0.5 dB are so good that RX and TX level accuracy are hardly affected, even without subsequent correction. For full adherence to the specifications contained in the data sheet however, the extra attenuation is calibrated automatically upon incorporation in the plant.

The intercept point (IP3 figure) is above +46 dBm. This means that intermodulation at normal RF levels is negligible.

Limiter response starts at +13 dBm. At higher input power the limited output level remains +20 dBm.

3. Replacement of Fusible Cutout

The exchangeable fusible cutout is destroyed at an input level of more than approx. 5 W and has to be replaced.

Unscrew the BNC socket outer conductor and carefully remove the inner conductor, and then the fusible cutout will be visible. It can be replaced by a new fuse (HNK no. 894 049) without any readjustments.

Lifeline: 4015 – RF Power Protection – 248 237 F

The chronological lifeline tells you what modifications have been made in the Service Manual concerning the functional description of the above-mentioned sub-unit. This lifeline helps you to find out quickly about all major changes (see code) stating the relevant pages on which alterations took place.

Code: C = Correction, TC = Text changed, SC = Specifications changed

Issue No.	Change-Note No.	pages	Code	Changes
00 – 01	4089.xx	all		New description, first lifeline, 01 = Correction of typing errors

Abgleich- und Prüfanweisung - Adjustment and Test Procedure

Meßgeräte Necessary Equipment	Meßvorgang Measuring Procedure	Meßpunkt Measuring Point	Frequenz Frequency	Abgleich Adjustment	Sollwert ±Tol. Set Value ±Tol.
	Insertion and return loss				
Network analyzer	Calibration of test setup without test item but with adapters.	Test setup	0 to 1 GHz	Set network analyzer to 0 dB_{rel}	0 dB_{rel}
	Insert test item without extra cables, measure insertion loss.	Bu-St44 or 45	0 to 0.2 GHz 0.2 to 1 GHz	--- ---	< 0.2 dB_{rel} < 0.5 dB_{rel}
	Measure return loss on BNC socket.	Bu44 or 45	0 to 1 GHz	---	> 18 dB
	RF level limiting				
Spectrum analyzer MS 611 Signal generator, eg 4015 Power amplifier min. 1 W to 1 GHz Attenuators HP8753C + transitions	**Test setup:** 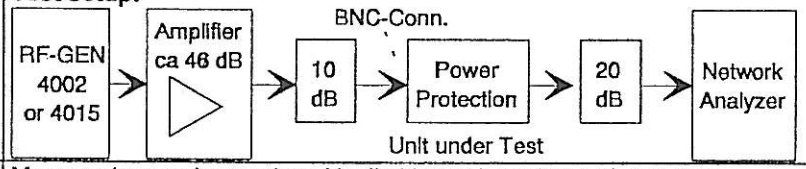				
	Measure harmonics produced by limiting at input level of +13 dBm If necessary, insert lowpass filter to suppress harmonics between signal generator and test item.	St44 or 45	Harmonics of 10; 100; 300; 600; 1000 MHz	---	Harmonics level > 40 dBc below fundamental
	Increase input power to +30 dBm. Measure output level.	St44 or 45	0.4 to 1 GHz	---	22 dBm ±1 dB
	RF level limiting, simplified test				
Radio set with approx. 1 to 3 W transmitter power, power meter or STABILOCK, eg 4015	A radio set can be used instead of the signal generator and power amplifier for the fast test. The limited output power is then measured with a power meter or by the selective power measurement of a STABILOCK.	St44 or 45	Frequency of radio set	---	19 dBm ±1 dB, + measuring uncertainty

A few tips:

1. At an input level of > 5 W the fusible cutout (HNK no. 894 049) in the BNC connector must respond. This cannot be tested without destroying the fuse.
2. No extra tests are necessary when incorporated in the 4015. But RF level calibration should not be made until the unit is incorporated.
3. In a STABILOCK 4015 with duplex stage it is possible to check correct working of the fusible cutouts by measuring the RX output level on the TX SENS input.

Lifeline: 4015 – RF Power Protection – 248 237 A

The chronological lifeline tells you what modifications have been made in the Service Manual concerning the alignment procedure of the above-mentioned sub-unit. This lifeline helps you to find out quickly about all major changes (see code) stating the relevant pages on which alterations took place.

Code: C = Correction, TC = Text changed, SC = Specifications changed

Issue No.	Change-Note No.	pages	Code	Changes
00 – 02	4089.xx	all		New description, first lifeline, 02 = Correction of typing errors

Einzelheit "X" M 10:1

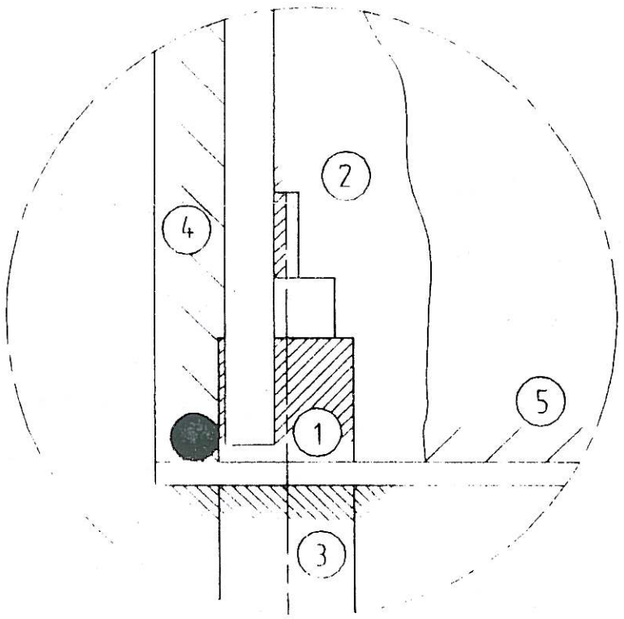

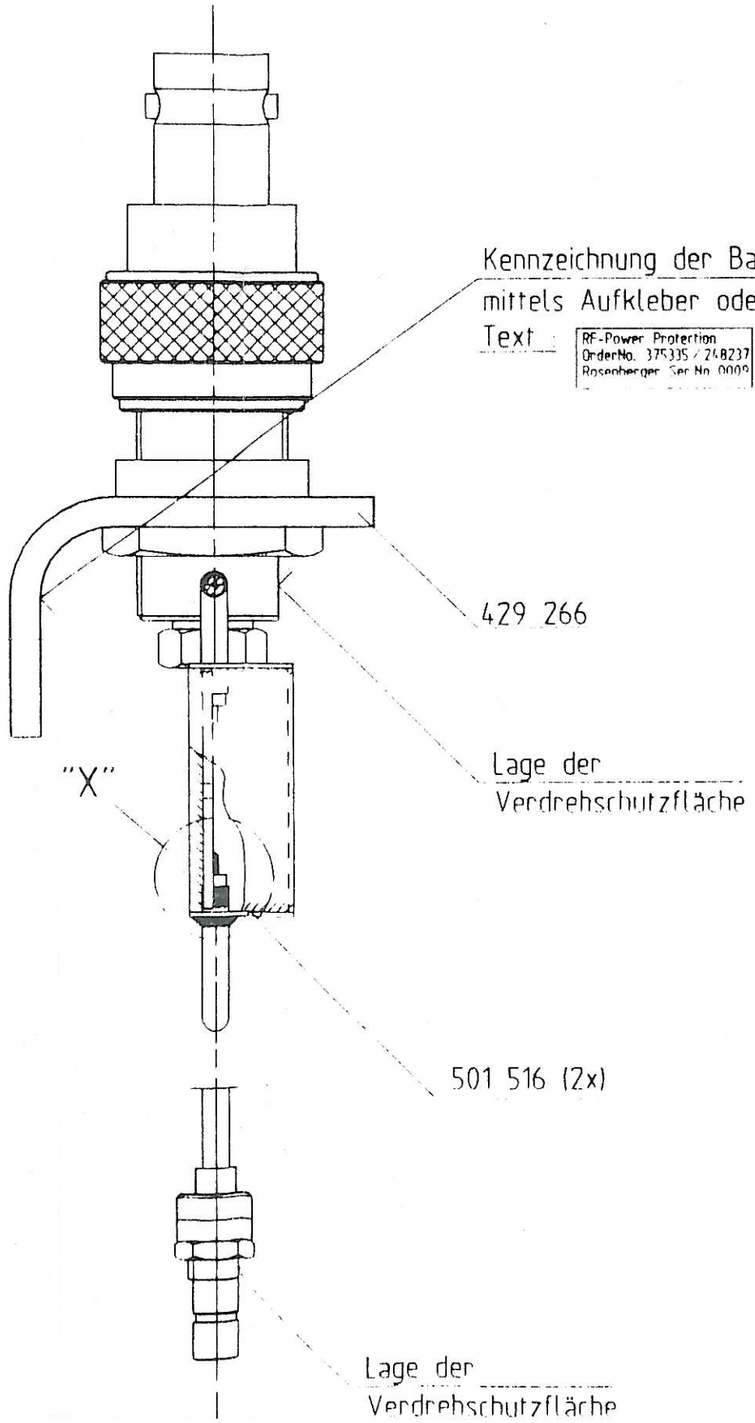

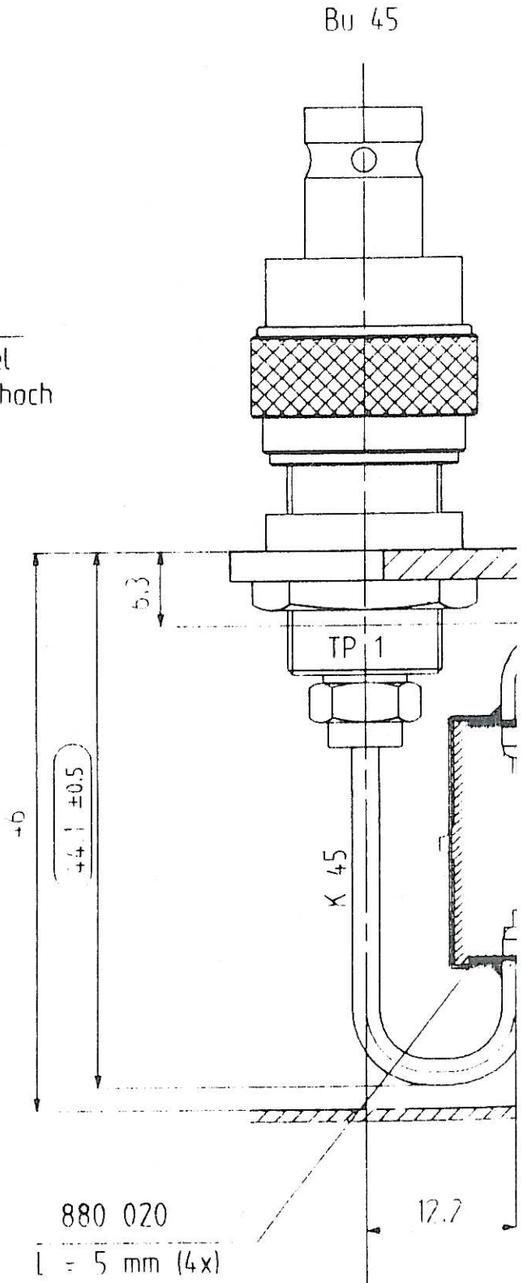

Arbeitsschritte für den Leiterplatteneinbau

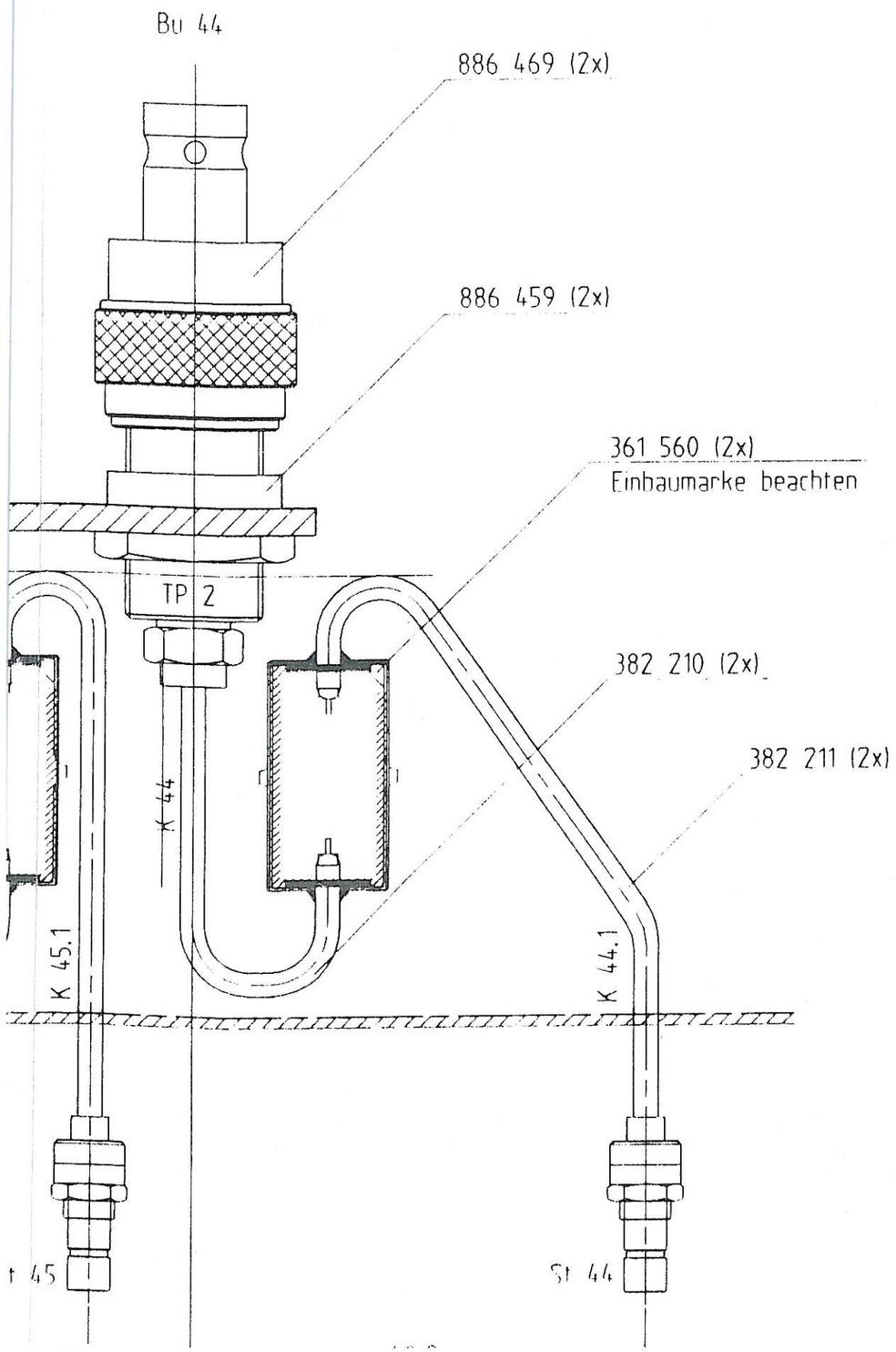

A
B
C
D
...ication to a third party is liable to prosecution and liable for damages.

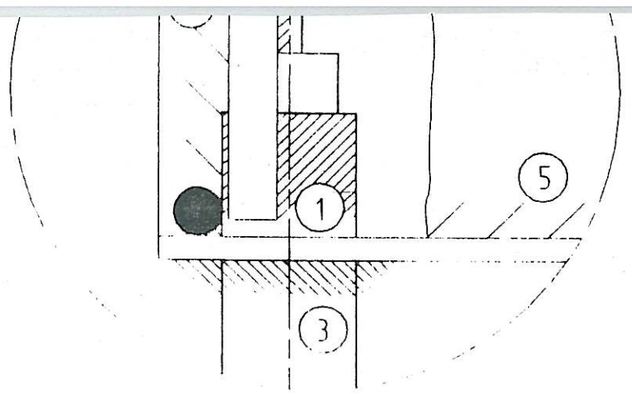

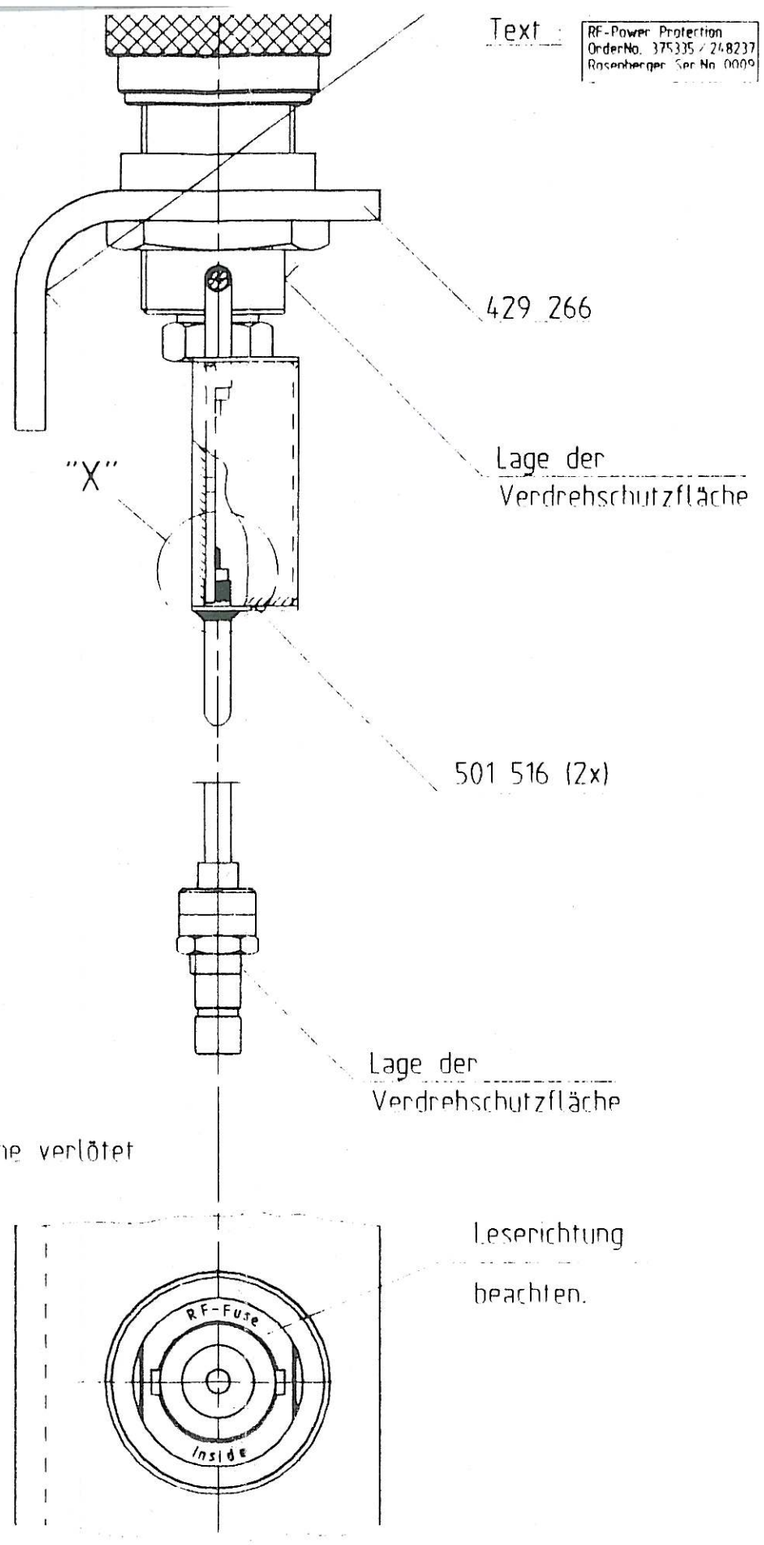

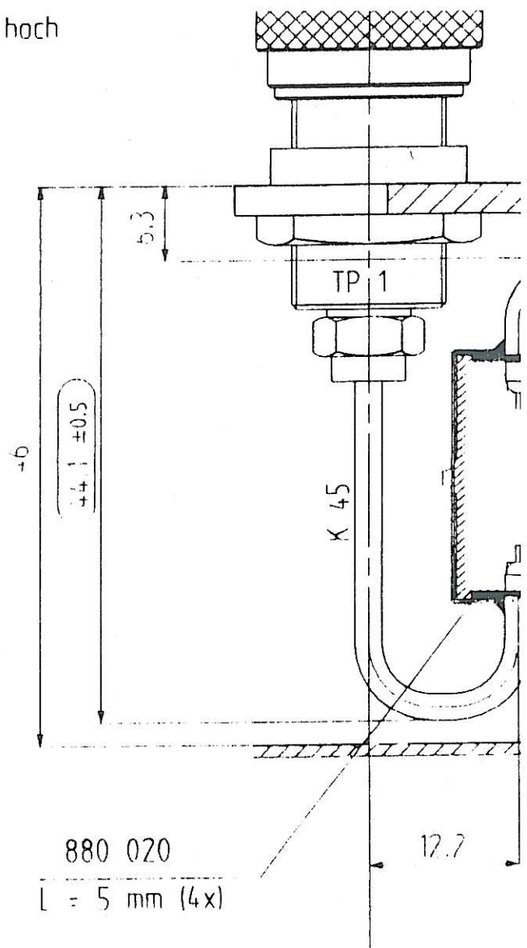

Arbeitsschritte für den Leiterplatteneinbau

1. Kabelmantel beidseitig auf Ober- und Unterseite mit Lp-Masseflache verlötet
2. Kabelinnenleiter mit Anschlußpad verlötet
3. Kabelmantel mit Gehäuse verlötet
4. Lp rundum mit Gehäuse verlötet
5. Gehäuseecken verlötet

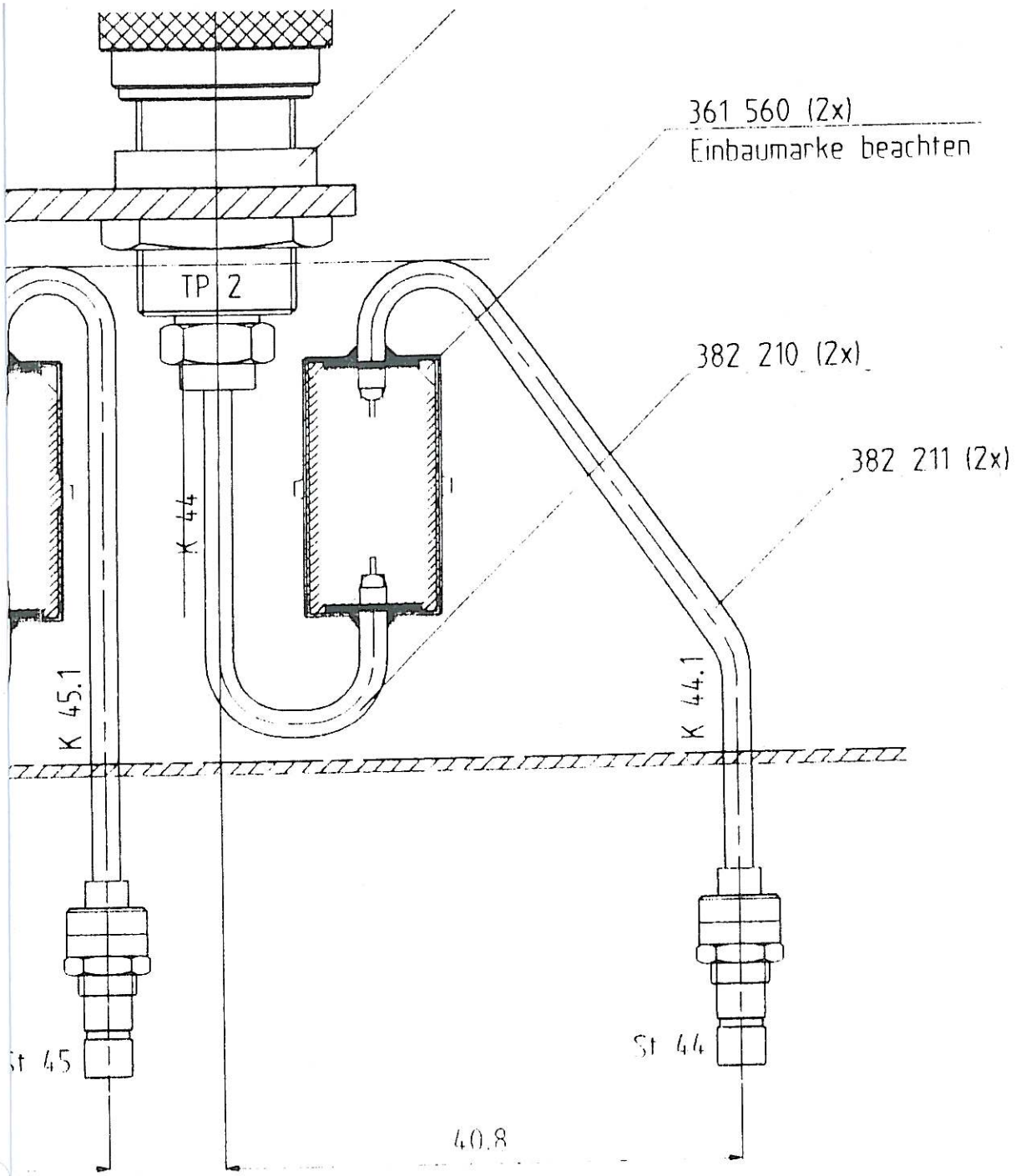

100% elektrisch geprüft nach 248 237 A

Kontrollmaß
Critical measurements

Schaltplanpositionierung 248 237 S / Sa

Rev. Stat	Date	Name
4089.15	11.10.94	WL
4089.4	14.3.94	Kr.
4089.1	17.2.94	Kr.

Rohteil / Initial part

Werkstoff / Material

Oberfläche / Surface

Freimaß toleranzen / default tolerance: ±1

Scale: 2.1

DIN A2

	1994	Date	Name
Drawn		17.2.94	Kr.
Designed			
Checked			

Schlumberger Technologies GmbH
Gutenbergstr. 2 4
85737 Ismaning

Bezeichnung / Description
ASSEMBLY UNIT
Typ: RF POWER PROTECTION

Zeichnungsnr / Drawing No.
375 335

Gerät / Unit 4015 / 248 237

Diese Zeichnung ist unser Eigentum. Vervielfältigung, unbefugte Verwertung, Mitteilung an andere ist strafbar und schadenersatzpflichtig.
This drawing is the property of SCHLUMBERGER. Reproduction, unauthorized use, communication to a third party is liable to prosecution and liable for damages.

Designed with Mac DRAFT

Makro [1]

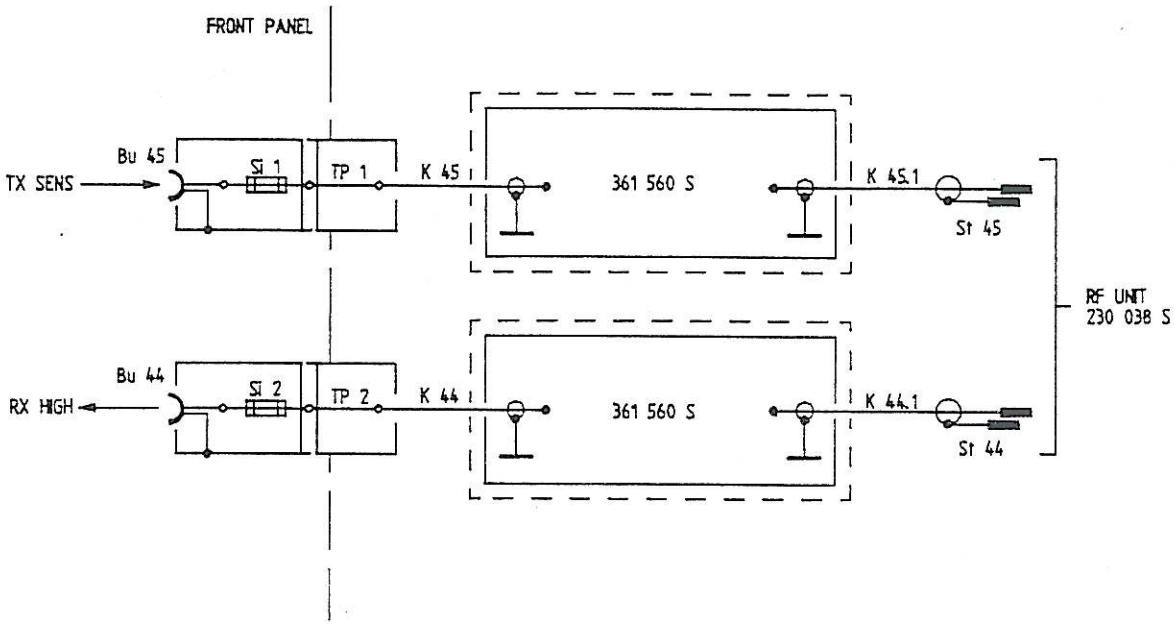

				NORM.		
				GEPR.		
00	4089.1	17.2.94	Kr.	BEARB.	17.2.94	Kr.
INDEX ISS	Ä.-NR. MODIF.	DATUM DATE	NAME NAME	1994	DATUM DATE	NAME NAME

SCHLUMBERGER
TECHNOLOGIES GMBH
Gutenbergstr. 2-4
85737 Ismaning

sw	BLACK	bl	BLUE
br	BROWN	vi	VIOLET
rt	RED	gr	GREY
rs	ROSE	ws	WHITE
ge	YELLOW	tr	TRANSPARENT
gn	GREEN		

BEZEICHNUNG / DESCRIPTION:

RF POWER PROTECTION

ZEICHNUNGSNR. / DRAWING NO.: 248 237 S

VON / OF

PROJEKT / GROUP: 4015 / 201 238 S

BLATT / SHEET

This drawing is property of SCHLUMBERGER. Reproduction, unauthorized use, communication to a third party is liable to prosecution and liable for damages.

Diese Zeichnung ist unser Eigentum. Vervielfältigung, unbefugte Verwertung, Mitteilung an andere ist strafbar und schadensersatzpflichtig.

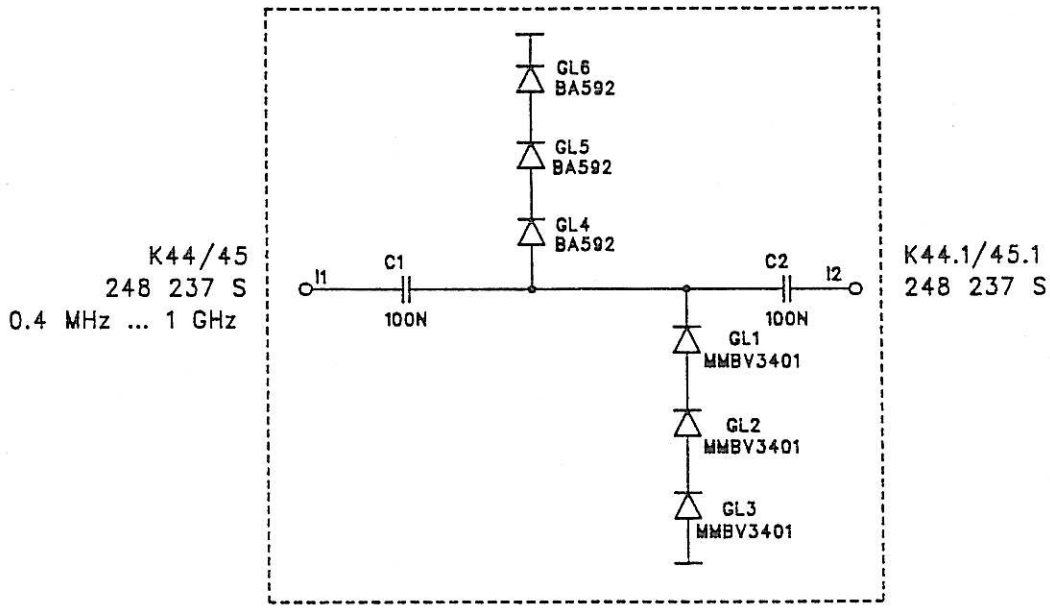

361 560

461 560 02

				DESIGNED	11.03.93	Wiesh.
				CHECKED		
00	4089.1	17.02.94	Bau.	DRAWN	11.03.93	Wiesh.
INDEX ISS.	A.-NR. MODIF.	DATUM DATE	NAME NAME		DATUM DATE	NAME NAME

SCHLUMBERGER
TECHNOLOGIES GMBH
Gutenbergstr. 2-4
8045 ISMANING

BEZEICHNUNG/DESCRIPTION:

LIMITER

ZEICHNUNGSNR./DRAWING NO.:

361 560 S

PROJECT/GROUP:
4015 / 248 237 S

Reflow gelötet
hierzu Bauteilklebemaske 461 560 02

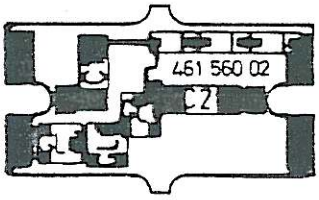

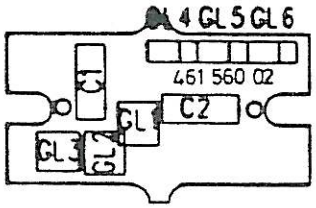

= Kontrollmaß
Critical measurements

Schaltplanpositionierung = 361 560 S / Sa

Rev. No.	Rev. Sht.	Date	Name
09			
08			
07			
06			
05			
04			
03			
02			
01			
00	4089,1	17.2.94	Kr.

Rohteil / Initial part:

Werkstoff / Material:

Oberfläche / Surface:

Freimaß toleranzen / default tolerance:

	Date	Name
1994		
Drawn	17.2.94	Kr.
Designed		
Checked		

Scale: 2:1

DIN A4

Schlumberger Technologies GmbH
Gutenbergstr. 2-4
85737 Ismaning

Bezeichnung: / Description:
Bestückte Leiterplatte
Typ: LIMITER

Zeichnungsnr.: / Drawing No.:
361 560

Gerät: / Unit: 4015 / 375 335

Diese Zeichnung ist unser Eigentum. Vervielfältigung, unbefugte Verwertung, Mitteilung an andere ist strafbar und schadensersatzpflichtig.

This drawing is property of SCHLUMBERGER. Reproduction, unauthorized use, communication to a third party is liable to prosecution and liable for damages.

Pos.	Benennung	Wert	HNK-Nr.	Herst.
2	Bestückte Leiterplatte		361 560	
			361 560	Sa
Bu 44	BNC Kopf + Si Element		886 469	ROS
Bu 45	BNC Kopf + Si Element		886 469	ROS
Si 1	894 049	in	886 469	ROS
Si 2	894 049	in	886 469	ROS
TP 1	Testport Adapter		886 459	ROS
TP 2	Testport Adapter		886 459	ROS
K 44	HF Kabel		382 210	SCHL
K 44.1	HF Kabel		382 211	SCHL
K 45	HF Kabel		382 210	SCHL
K 45.1	HF Kabel		382 211	SCHL

Schlumberger Technologies GmbH				Schaltteilliste	Anz. d. Seiten
00 Index	4089.1 Ä.Nr.	17.02.94 Datum	Kr. Name	RF POWER PROTECTION	1
Erst.: Kr.		Gepr.:		248 237 Sa	Seite Nr
Gerät: 4015 / 201 238 S					1

Pos.	Benennung	Wert	HNK-Nr.	Herst.
C1	Kondensator X7R	100nF ±10% 50V-	813375	VIT
C2	Kondensator X7R	100nF ±10% 50V-	813375	VIT
GL1	PIN-Diode	MMBV3401	830529	MOT
GL2	PIN-Diode	MMBV3401	830529	MOT
GL3	PIN-Diode	MMBV3401	830529	MOT
GL4	HF-Schaltdiode	BA592	830560	SIE
GL5	HF-Schaltdiode	BA592	830560	SIE
GL6	HF-Schaltdiode	BA592	830560	SIE

Schlumberger Technologies GmbH				Schaltteilliste	Anz. d. Seiten
00 Index	4089.1 Ä.Nr.	17.02.94 Datum	Kr. Name	Bestückte Leiterplatte Typ: LIMITER	1
Erst.: Bau		Gepr.:		361 560 Sa	Seite Nr
Gerät: 4015 / 375 335					1

Output Stage (RF UNIT 230038)

In RX mode the output stage is responsible for amplifying the RF signal of the synthesizer. The RF signal can also be amplitude-modulated. For RX mode under 125 MHz there is down-conversion with a frequency of 410 MHz.

In TX mode the input frequency that is to be measured is down-converted to 0.4 MHz, amplified and applied to the IF/AF stage. In duplex mode the duplex stage produces the LO (local-oscillator) frequency.

Description of Signal Paths

The UHF synthesizer produces the RF for RX mode, and this can also be frequency-modulated. The transmission band of the amplitude-controlled input amplifier is 125 to 999 MHz (T14, T2). This is followed by AM modulator GL2, 4, 5, 7. The conditioned signal is applied via a diode switch to RF amplifier T4. In the frequency band 0.4 through 125 MHz the RF is not applied direct to the output amplifier but first to mixer MI1. A 410-MHz oscillator acts as the LO-signal source. The signal in the frequency band 0.4 through 125 MHz appears on the output of the mixer. T5 and T6 form the 125-MHz amplifier. The filtered signal is then fed to the output amplifier.

Amplitude Modulator and Auxiliary Modulator

ST67-12 is connected to the modulation generator. This AF (consisting of DC and AC components) is fed via A301 and A302 to auxiliary-modulator mixer MI300. The RF required for the modulator is derived from the 20-MHz crystal. D301-A,-B is configured as a frequency divider (:25). T311 boosts the LO signal. The RF connector of the mixer already carries an AM signal. This is followed by a linearizing network, consisting of an RF probe GL11, GL12 and A2. This probe is like the detector probe on the output of the output amplifier in its circuitry, so distortions of level linearity are reduced. The output signals of the two probes are compared with the aid of A3. This results in an AM control voltage.

Attenuator

The RF (0.4 to 999 MHz), after level conditioning, is applied to the electronic attenuator. Following this the output sockets are connected. If the RX HIGH socket is selected, the RF is fed via GL14 to socket 44. The booster is cut in for a level between 0 and 13 dBm. Both the signal path is switched and the current for booster T3, T4. If the RX socket is selected, the RF is applied via GL11 to the power splitter and then via a power attenuator to the output socket.

In TX mode and after selection of the TX socket, the input signal to be measured is applied via the power splitter to TX mixer MI1. If the TX SENS socket is coupled on the other hand, the input voltage is either attenuated or amplified by T40. The signal then goes to the TX mixer. The LO amplifier boosts either the synthesizer signal or the duplex RF signal. Before the duplex RF is amplified, level matching is produced by an amplitude-controlled input amplifier.

The TX mixer generates the intermediate frequency. This is filtered and fed to an amplifier with switchable gain (T201, T202, T203, T204, T205). For precise power measurement there is a calibration generator that feeds a 20-MHz signal into the TX attenuator. The calibrated IF is produced with the appropriate LO frequency.

In TX mode (TX socket coupled) there is the possibility of frequency counting. If this is used, a diode switch in the power splitter breaks and the test signal goes to a three-stage broadband amplifier. This amplifier has an input control for increasing the dynamic response. The amplified signal is fed to an RF divider (:64). The frequencies that are about 50 MHz or lower are TTL-conditioned by a lowpass filter (T251). With switch D251 the second frequency divider (:64) can be both cascaded with the first RF divider and switched direct via the TTL conditioner to the counter amplifier.

Description of 410-MHz Oscillator

Transistor T13 generates the RF oscillation and T10 switches on the supply voltage. T11, T12, T14 and T15 are for smoothing the oscillator operating voltage. The RF is coupled out on the low end of the oscillator circuit, conditioned by T30 and divided by 41 by D30 (10-MHz signal). 20 MHz (crystal) is divided by 2. A PLL device compares the two signals; a loop filter produces the varactor voltage.

On the RF Control board there is a buffer, a controller, two PIAs plus an EEPROM memory chip (refer to the adjustment and test procedure when exchanging the EEPROM) that contains all values for frequency correction (RX and TX).

Necessary Equipment	Measuring Procedure	Measuring Point	Frequency	Adjust-ment	Set Value
4015 4002 Analyzer HP demod meter Power meter with high-impedance amplifier Oscilloscope	Use a 4015 as the test adapter. The UHF synthesizer, duplex stage or modulation generator can be replaced by external signal sources.				
	1)RX w/o booster 0 dBm f > 125 MHz P_I = -5 dBm, 200 MHz, Bu46 V_RXAM = 6.5 Vdc V_RXAM = 13 Vdc	TX socket 44	200 MHz	R 334, R 114, R 47,	Center setting Center setting 0 dBm +/- 0.2 dB > 2 dBm
	2)Linearity (fine level) 6.500 V = 0 dBm 2.055 V = -10 dBm 0.650 V = -20 dBm		200 MHz		0 dBm +/- 0.2 dB -10 dBm +/- 0.5 dB -20 dBm +/- 1.0 dB
	3)Attenuator f = 200 MHz / -5dBm V_RXAM = 6.5 Vdc	TX socket 44	200 MHz	-	0 dBm +/- 0.2 dB
	Cut in 10 dB, 20 dB, 20 dB attenuation one after the other, measure at each attenuation.		200 MHz		-10 dBm +/- 2 dB -20 dBm +/- 2 dB -20 dBm +/- 2 dB
	Frequency-response flatness for attenuation:		125-900 MHz		+/- 2 dB

Necessary Equipment	Measuring Procedure	Measuring Point	Frequency	Adjust-ment	Set Value
	4)RF socket, DC = 6.3 V	RF socket	200 MHz	-	-60 dBm +/- 5 dB
	5)Booster > 0 dBm V_RXAM = 6.5 Vdc f = 1.5-990 MHz	RX socket	125-990 MHz	-	+13 dBm +/- 4 dB
	TX tests 1)RF socket, f_I = 20 MHz P_I = +13 dBm, V = 17 dB With meter amplifier: indication = -38 dBm	ID 207	0.45 MHz	R295	-32 dBm +/- 0 dBm
	2)TX SENS socket a)P_I = +2 dBm, f = 20 MHz (22-dB branch) G = 17 dB (22-dB branch) G = 37 dB	"	"	-	-12 dBm +/- 2 dBm P_17 dB + 20 dB +/- 1 dB
	b)P_I = -28 dBm (+8 dB gain)	"	"	-	-12 dBm +/- 3 dB
	3)Frequency-response flatness Like 1) but f_I = 1.5-990 MHz	"	"	(poss. R295)	P_max < -10 dBm P_min > -14 dBm

Necessary Equipment	Measuring Procedure	Measuring Point	Frequency	Adjust-ment	Set Value
	4)Frequency-response flatness of SENS socket Like 2a), b), f_I = 1.5-990 MHz				P_a) +/- 1.5 dB P_b) +/- 2 dB
	Duplex TX Measure like TX, but LO = duplex				
	RF counter				
	TX, counter ON 1)T = 64 : 1 RF measurement on RF socket P_I = 0 dBm f = 1-50 MHz	ID 252	f_I / 64		
	T = 4096 f = 45-500 MHz / 0 dBm f = 500-990 MHz / +10 dBm	"	f_I / 4096		
	CAL generator Settings like TX SENS, G = 37 dB (22-dB branch) -11 dBm / 20 MHz on TX SENS socket, note IF level. Terminate input with 50 Ω, switch on CAL. Set IF level with CAL potentiometer.	ID 205	0.45 MHz	R217	For comparison value, see test procedure

Necessary Equipment	Measuring Procedure	Measuring Point	Frequency	Adjust-ment	Set Value
	Amplitude modulation Level: -7 dBm f = 5-1000 MHz m = 50 % f_MOD = 1-3 kHz	RX socket 44	1-3 kHz	-	m = 50 % +/- 6 % Dist. < 2 % < 500 MHz Dist. < 3 % > 500 MHz
	f = 500 MHz f_MOD = 1 kHz m = 75 %		1 kHz		m = 75 % +/- 10 %
	RX < 125 MHz 410-MHz oscillator	I 42 (varactor line)	DC	C16	5 V at room temp.
	LO level on mixer High-impedance probe	LO pin MI 1	410 MHz	-	0 dBm
	RX < 125 MHz (0 dBm) V_RXAM = 13 V	RX socket 44	0.5-125 MHz	-	> +2 dBm
	RX < 125 MHz (13 dBm) V_RXAM = 13 V	"	"	-	> +15 dBm

Necessary Equipment	Measuring Procedure	Measuring Point	Frequency	Adjust-ment	Set Value
	External synchronization, crystal frequency, 0.8 MHz instrument frequency				
	800 kHz	St67-34	0.8 MHz	-	> 0.4 Vpp
	Crystal 20 MHz	Bu47	20 MHz	-	> 2 Vpp
		Bu47	20.000000 MHz	R313	20.000000 MHz
	Check of temperature sensor				
	Carefully heat R301 with warm air: speed of fan must increase.				
	Note for test stations: after replacement of a defective EEPROM, the new EEPROM **must** be initialized and tested. Issue parenthesized instruction [6001AD1] and then check with parenthesized instruction [600100] that correct result 0000 appears.				

Issue	Date	Name	Unit	Sub Unit	Ref. No.	Series	Comment	Sheet
00	19.04.91	Salzmann	STABILOCK 4015	RF Unit	230 038 A			5/5

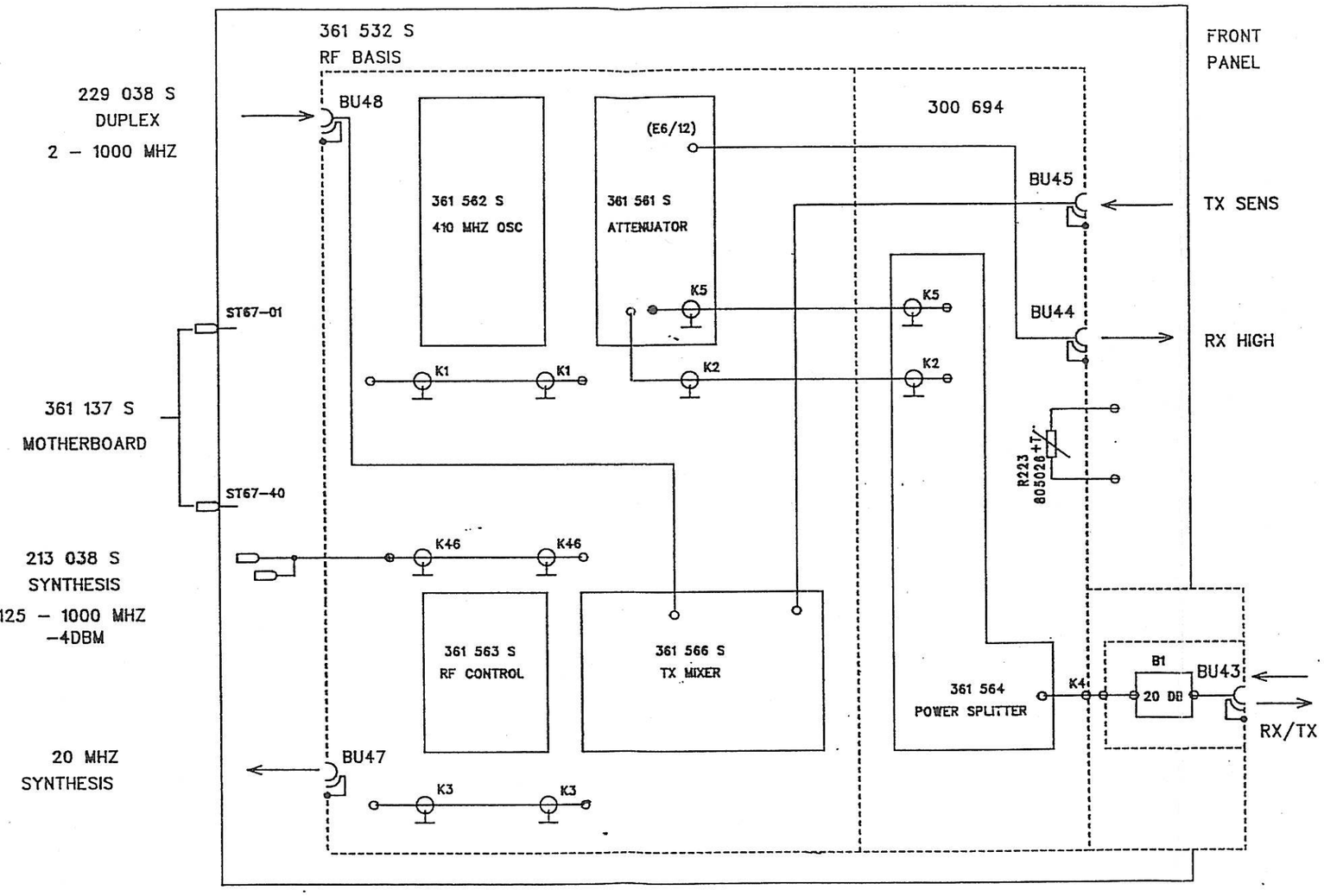

INDEX ISS.	Ä.–NR. MODIF.	DATUM DATE	NAME NAME		DATUM DATE	NAME NAME
05	2089.28	02.09.92	VARGA	DESIGNED		
04	1089–47	11.07.91	VARGA	CHECKED		
03	1089.19	21.03.91	UNGER	DRAWN		

SCHLUMBERGER TECHNOLOGIES GMBH
INGOLSTÄDTER STR. 67A
8000 MÜNCHEN 46

BEZEICHNUNG/DESCRIPTION:
RF UNIT

ZEICHNUNGSNR./DRAWING NO.: 230 038 S
PROJECT/GROUP: 4015 / 201 238 S
1 VON/OF 1
BLATT SHEET

This drawing is the property of SCHLUMBERGER. Reproduction, unauthorized , use, communication to a third party is liable to prosecution and liable for damages.
DIESE ZEICHNUNG IST UNSER EIGENTUM. VERVIELFÄLTIGUNG, UNBEFUGTE VERWERTUNG, MITTEILUNG AN ANDERE IST STRAFBAR UND SCHADENERSATZPFLICHTIG.

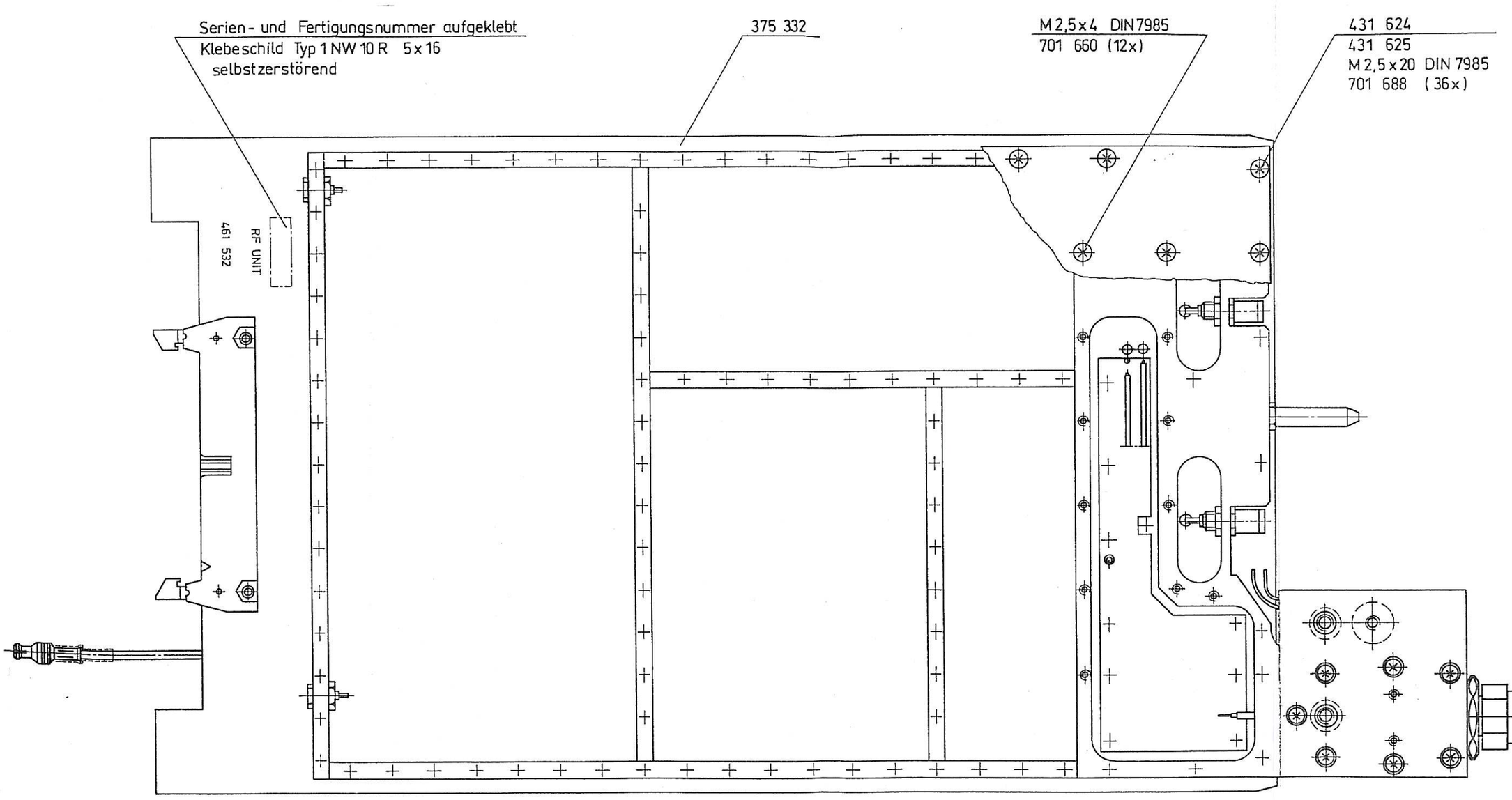

Rev. No.	Rev. Sht.	Date	Name
09			
08			
07			
06			
05			
04	2089.4	24.2.92	Wi.
03	1089.19	21.3.91	Kr.
02	1089.3	4.2.91	Kr.
01			
00			

Rohteil: / Initial part:

Werkstoff: / Material:

Oberfläche: / Surface:

Freimaßtoleranzen: / default tolerance:

Scale: 1:1

DIN A3

1991	Date	Name
Drawn	4.2.91	Kr.
Designed		
Checked		

Schlumberger Technologies GmbH
Ingolstädter Straße 67 a
8000 München 46

Bezeichnung: / Description:
RF UNIT

Zeichnungsnr.: / Drawing No.:
230 038

Gerät: / Unit: 4015 / 201 238

Diese Zeichnung ist unser Eigentum. Vervielfältigung, unbefugte Verwertung, Mitteilung an andere ist strafbar und schadenersatzpflichtig.

This drawing is the property of SCHLUMBERGER. Reproduction, unauthorized use, communication to a third party is liable to prosecution and liable for damages.

Einzelheit „X" M 5:1

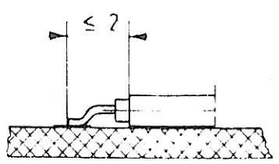

Schnitt A - A M 5:1

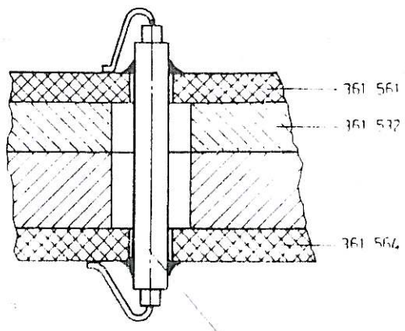

382 666 / K2
weich verlötet

433 505 (2x)

433 503

433 502

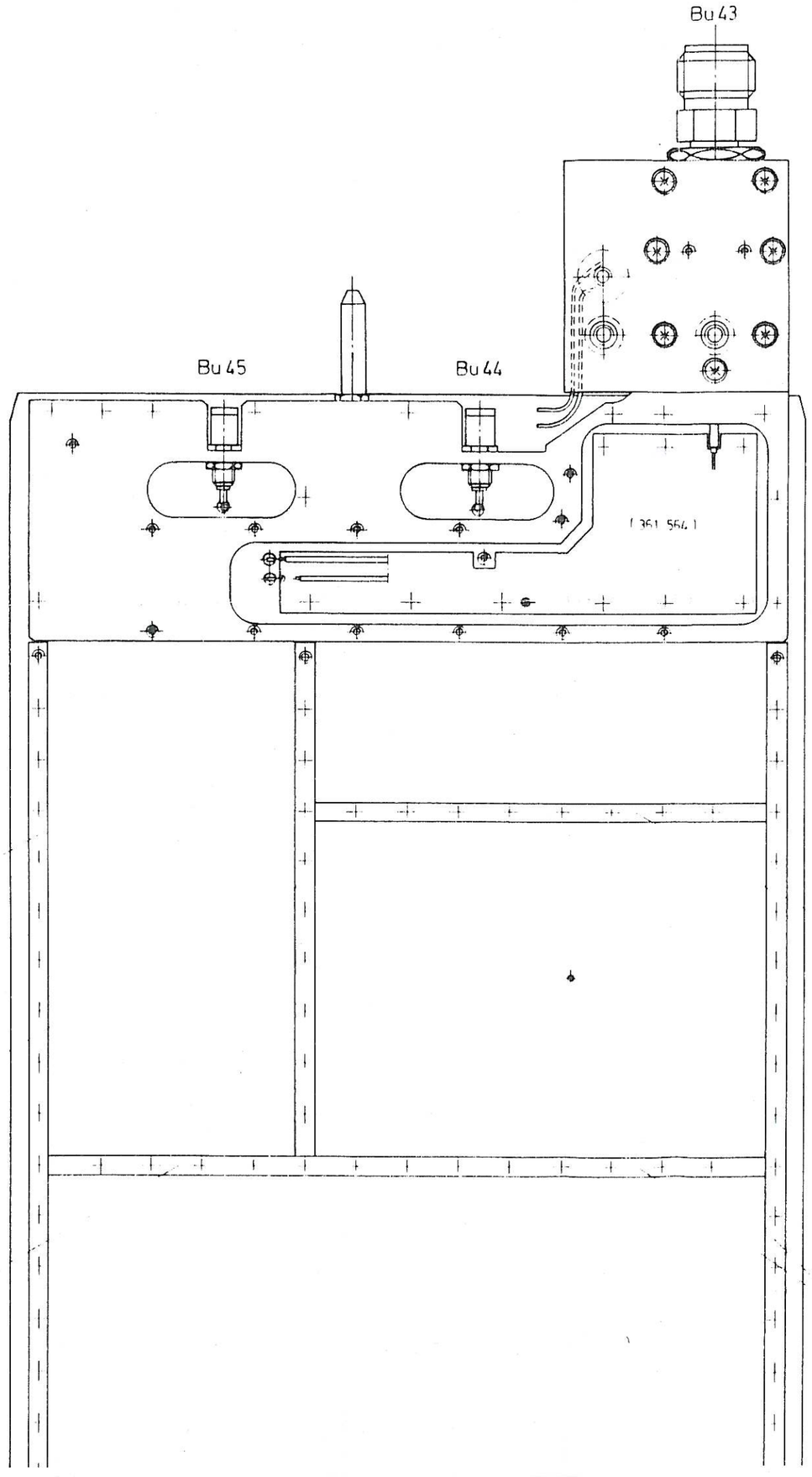

889 017
l = 30 mm (2x)

433 504

Zinnwarzen unter den Aluleisten 433... dürfen nicht deformiert werden

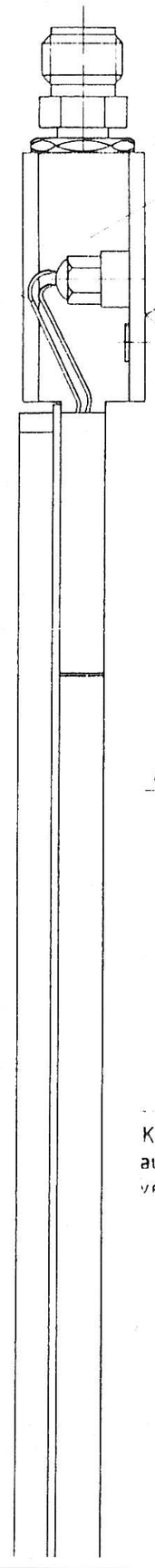

300 694

Fläche plan
(Warmekontak

M2,5 x 4 DIN 7985
701 660 (3x)

461 Einbaumarke

433 510

382 660 / K5
Kabelmantel mit Massefl
auf LP 361 561 u. 361 532
verlötet

880 020
l = 6 mm
beidseitig verlötet

433 509

382 657 / K1

weich gelötet

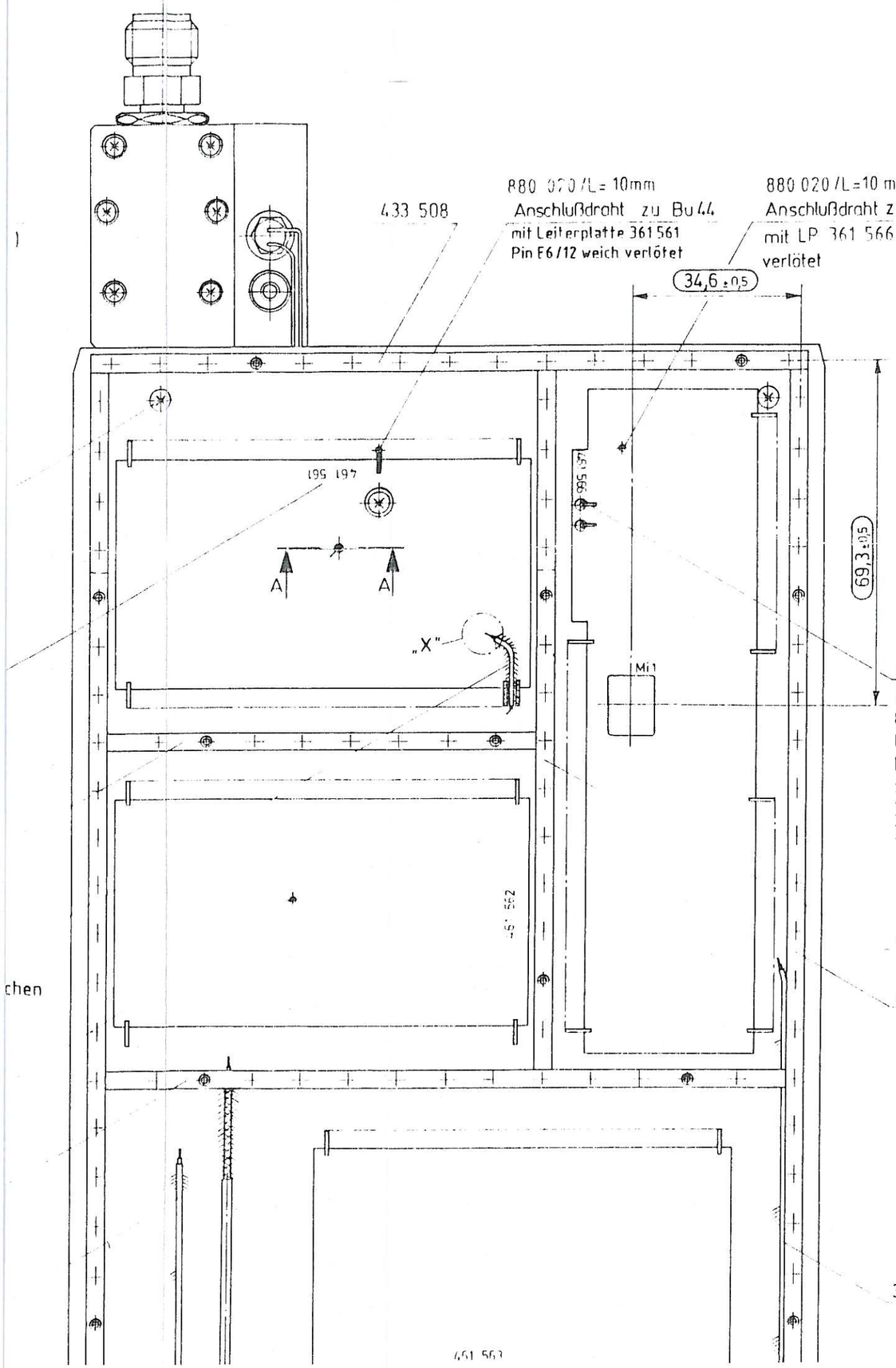

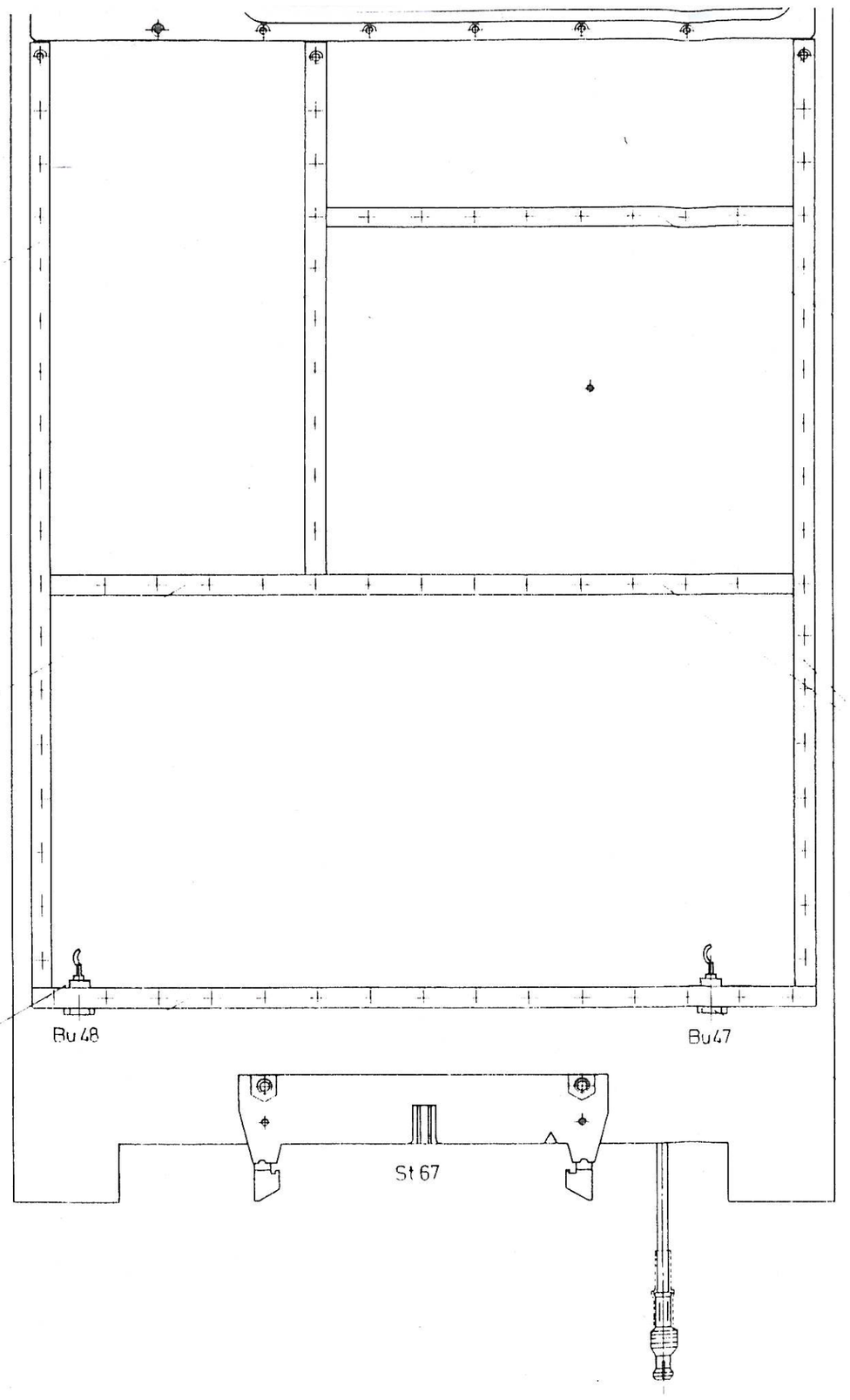

433 505 (2x)

433 503

433 502

Kennmarkierer "48"
765 048 aufgeklebt

433 501

433 504

Zinnwarzen unter den Aluleisten 433... dürfen nicht deformiert werden

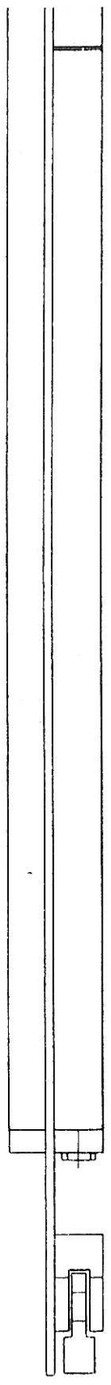

Kennmarkierer "47"
765 047 aufgeklebt
886 185 (2x)
880 020
l = 8 mm (2x)
Bu 47/48 mit Loctite gesichert

461 ≙ Einbaumarke

433 510

382 660 / K5
Kabelmantel mit Masseflächen auf LP 361561 u. 361532 verlötet

880 020
l = 6 mm
beidseitig verlötet

433 509

382 657 / K1

2,5 x 12 DIN 7346
707 336 (14x)

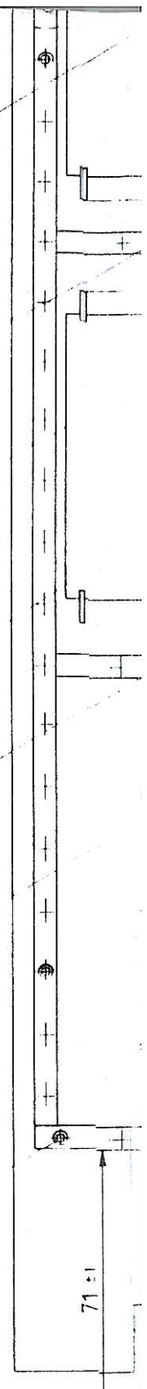

Schaltplanpositionierung ≙ 230 038 S / Sa

8 7 6 5 4

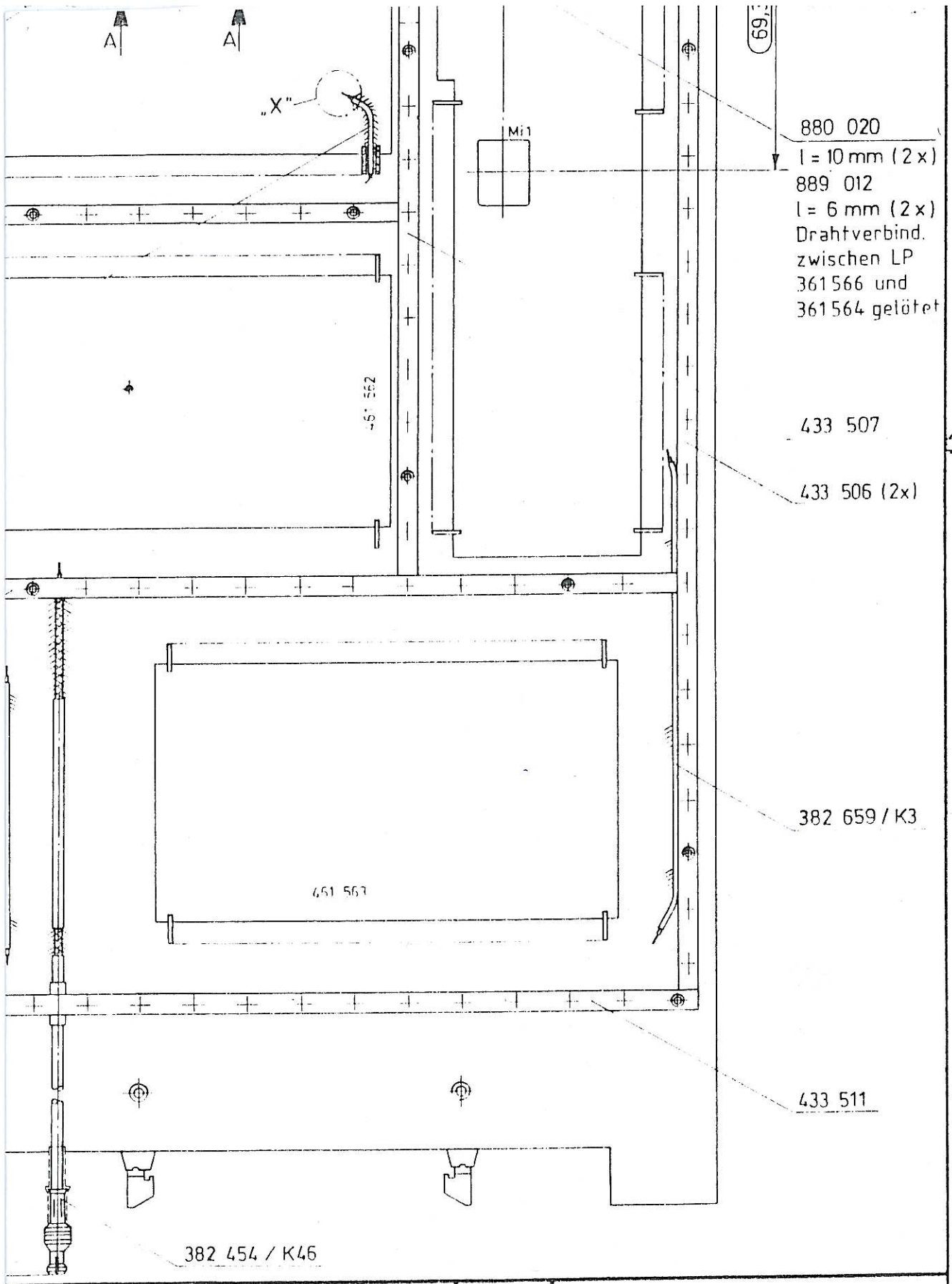

2089.26	28.8.92	Ka.
2089.4	24.2.92	Wi.
1089.84	17.12.91	Kr.
1089.47	10.7.91	Kr.
1089.19	21.3.91	Kr.
1089.3	4.2.91	Kr.
Änd. Mittg.	Datum	Name

Sch

Rohteil

Werkstoff

Oberfläche

Freimaß-Toleranzen

Maßstab

1:1
(5:1)

1991	Datum	Name
gez.	4.2.91	Kr.
bearb.		
gepr.		

Schlumberger Meßgeräte GmbH
Ingolstadter Straße 6[illegible]a
8000 München 46

FLAT MODUL

Typ : RF UNIT

375 332

Gerät 4015 / 230 038

...se Zeichnung ist unser Eigentum. Vervielfältigung, unbefugte Verwertung, Mitteilung an andere, ist strafbar und schadenersatzpflichtig.

1	2	3	4	5	6	7	8
Pos. REF. NO.	Wert VALUE	Bezeichnung Schlumberger PART NO.	Hersteller MANUFACT	Pos. REF. NO.	Wert VALUE	Bezeichnung Schlumberger PART NO.	Hersteller MANUFACT
1	Bestückte Leiterplatte	361 532					
	hierzu	361 532 Sa					
1	Bestückte Leiterplatte	361 561		K46	HF-Kabel	382 454	SCHL
	hierzu	361 561 Sa					
1	Bestückte Leiterplatte	361 562					
	hierzu	361 562 Sa		R223		805 026 in 300 694	
1	Bestückte Leiterplatte	361 563					
	hierzu	361 563 Sa					
1	Bestückte Leiterplatte	361 566					
	hierzu	361 566 Sa					
1	Bestückte Leiterplatte	361 564 in 300 694					
B 1	20 dB	804 570 in 300 694					
Bu43		886 078 in 300 694					
Bu44		886 405 in 300 694					
Bu45		886 405 in 300 694					
Bu 47	82 MCX-50-0-1-133	886 185	SUHN				
Bu 48	82 MCX-50-0-1-133	886 185	SUHN				
K 1	Vollmantelkabel	382 657	SCHL				
K 2	Vollmantelkabel	382 666	SCHL				
K 3	Vollmantelkabel	382 659	SCHL				
K 4	Vollmantelkabel	382 459 in 300 694					
K 5	Vollmantelkabel	382 660	SCHL				

Ausgabe ISSUE	Änd.-Mittlg Nr MODIFIC. NO	Tag DATE	Name NAME
07			
06			
05			
04			
03	1089.47	11.7.91	Kr.
02	1089.19	21.3.91	Kr.
01	0089.47	20.9.90	Kr.
--	0089.10	10.5.90	Kr.

Schlumberger Meßgeräte GmbH
Ingolstädter Straße 67 a
8000 München 46

	Tag DATE	Name NAME
geschr	10.5.90	
bearb		
gepr		

Schaltteilliste
EL. PARTS LIST

Benennung DESCRIPTION: RF UNIT

Bezeichnung Schlumberger PART NO: 230 038 Sa

Hierzu Schaltplan SEE CIRCUIT DIAGRAM: 230 038 Sa

Gerät: 4015

Liste besteht LIST CONSISTS aus OF 1 Blatt SHEETS

Blatt Nr SHEET NO: 1

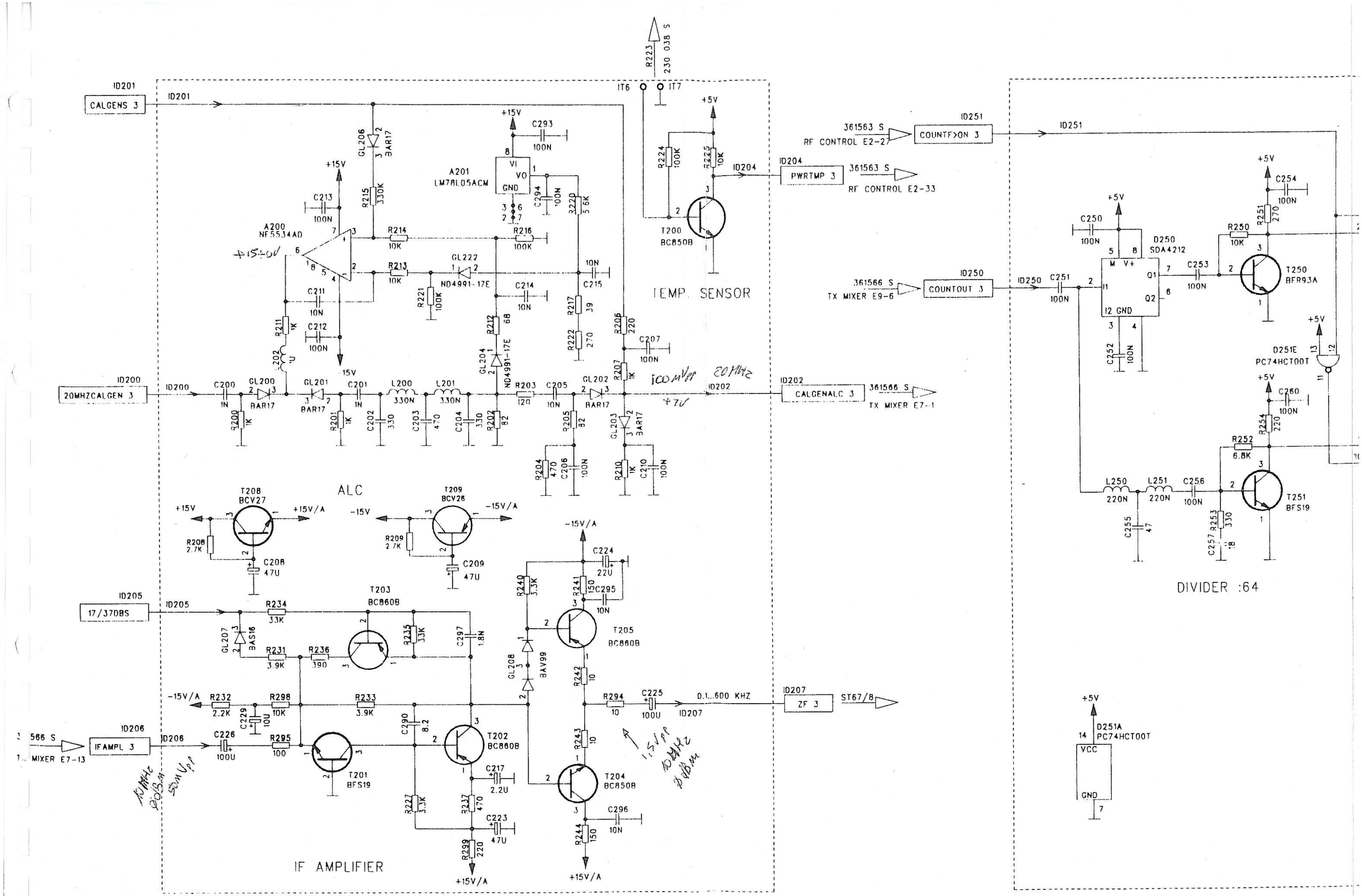

10	4089.3	10.03.94	Bau	DESIGNED		
09	3089.6	27.05.93	VARGA	CHECKED	18.04.90	VARGA
08	2089.28	02.09.92	VARGA	DRAWN	16.10.89	FLE.
INDEX ISS.	Ä.-NR. MODIF.	DATUM DATE	NAME NAME		DATUM DATE	NAME NAME

8 7 6 5 4 DIESE ZEICHNUNG IST

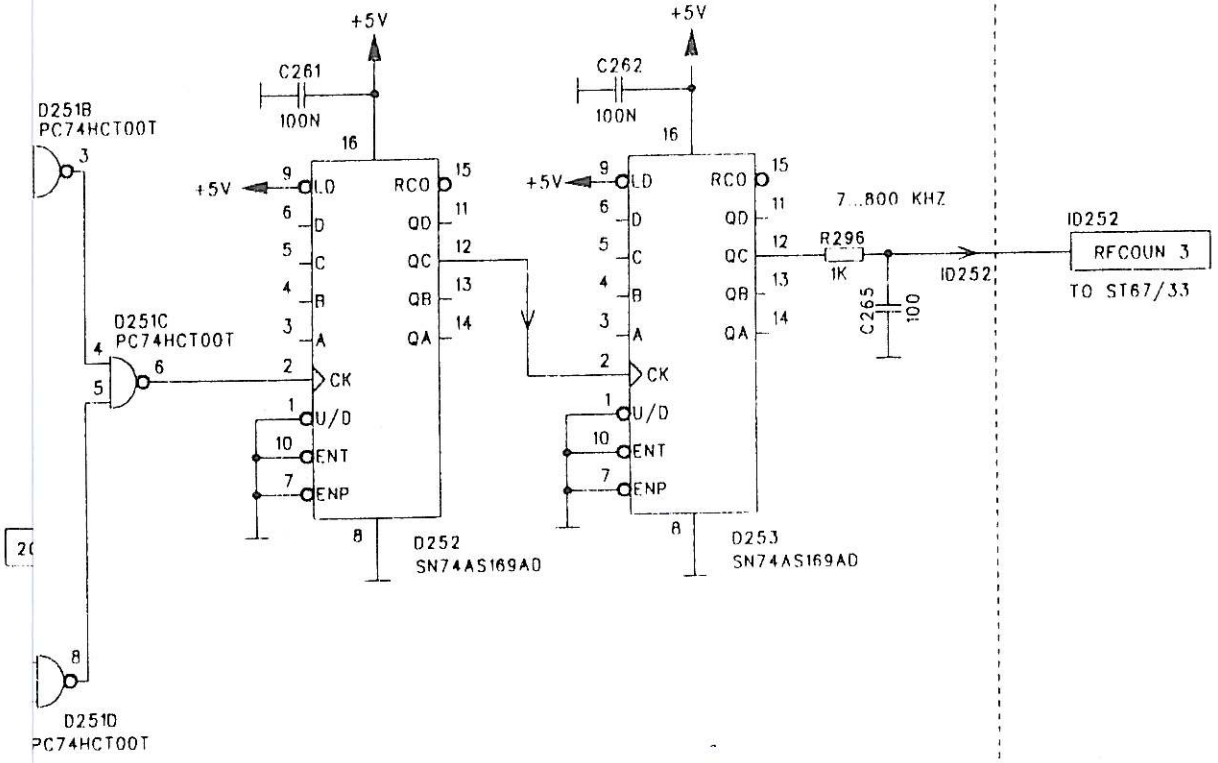

DIVIDER :64

COUNTER

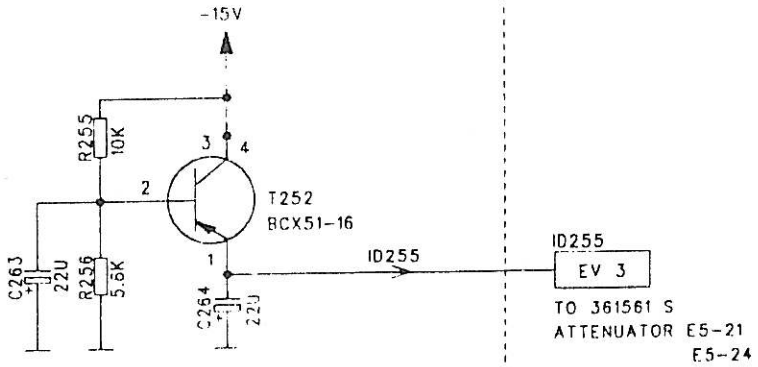

ATTENUATOR
SUPPLY

SCHLUMBERGER TECHNOLOGIES GMBH Gutenbergstr. 2-4 85737 ISMANING	BEZEICHNUNG/DESCRIPTION: RF UNIT	ZEICHNUNGSNR./DRAWING NO.: 361 532 S	2 VON/OF 3
		PROJECT/GROUP: 4015 / 230 038 S	BLATT SHEET

NSER EIGENTUM. VERVIELFÄLTIGUNG, UNBEFUGTE VERWERTUNG, MITTEILUNG AN ANDERE IST STRAFBAR UND SCHADENERSATZPFLICHTIG.

This drawing is the property of SCHLUMBERGER. Reproduction, unauthorized use, communikation to a third party is liable to prosection and liable for damages.

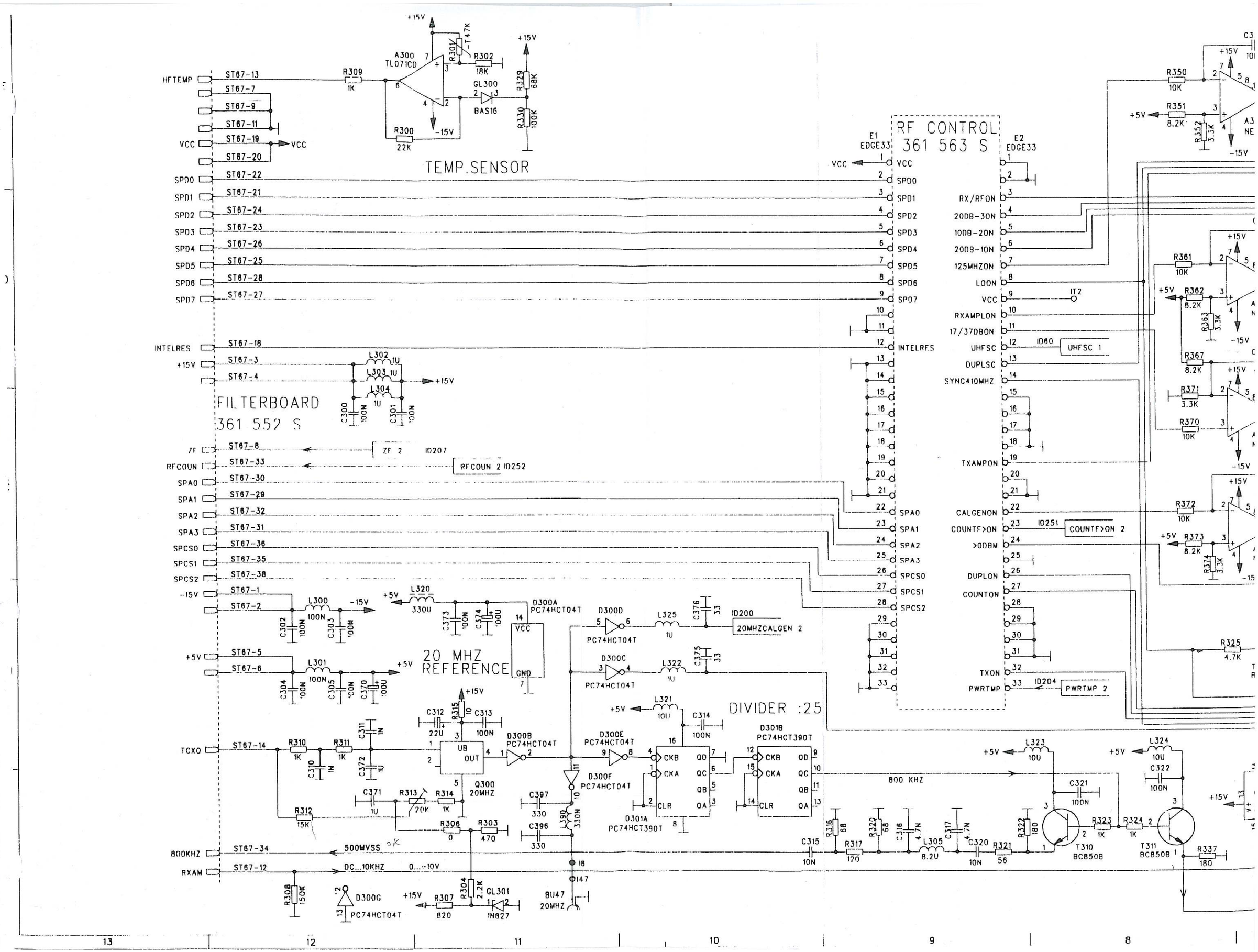

TEMP.SENSOR
A300 TL071CD
GL300 BAS16
RF CONTROL 361 563 S
E1 EDGE33
E2 EDGE33
FILTERBOARD 361 552 S
20 MHZ REFERENCE
DIVIDER :25
Q300 20MHZ
D300A PC74HCT04T
D300B PC74HCT04T
D300C PC74HCT04T
D300D PC74HCT04T
D300E PC74HCT04T
D300F PC74HCT04T
D300G PC74HCT04T
D301A PC74HCT390T
D301B PC74HCT390T
T310 BC850B
T311 BC850B
BU47 20MHZ
HFTEMP
VCC
SPD0
SPD1
SPD2
SPD3
SPD4
SPD5
SPD6
SPD7
INTELRES
+15V
ZF
RFCOUN
SPA0
SPA1
SPA2
SPA3
SPCS0
SPCS1
SPCS2
-15V
+5V
TCXO
800KHZ
RXAM
500MVSS
DC...10KHZ
0...+10V
800 KHZ
RX/RFON
20DB-30N
10DB-20N
20DB-10N
125MHZON
LOON
RXAMPLON
17/37DBON
UHFSC
DUPLSC
SYNC410MHZ
TXAMPON
CALGENON
COUNTF>ON
>0DBM
DUPLON
COUNTON
TXON
PWRTMP
ID60 UHFSC 1
ID251 COUNTF>ON 2
ID204 PWRTMP 2
ID207 ZF 2
RFCOUN 2 ID252
ID200 20MHZCALGEN 2

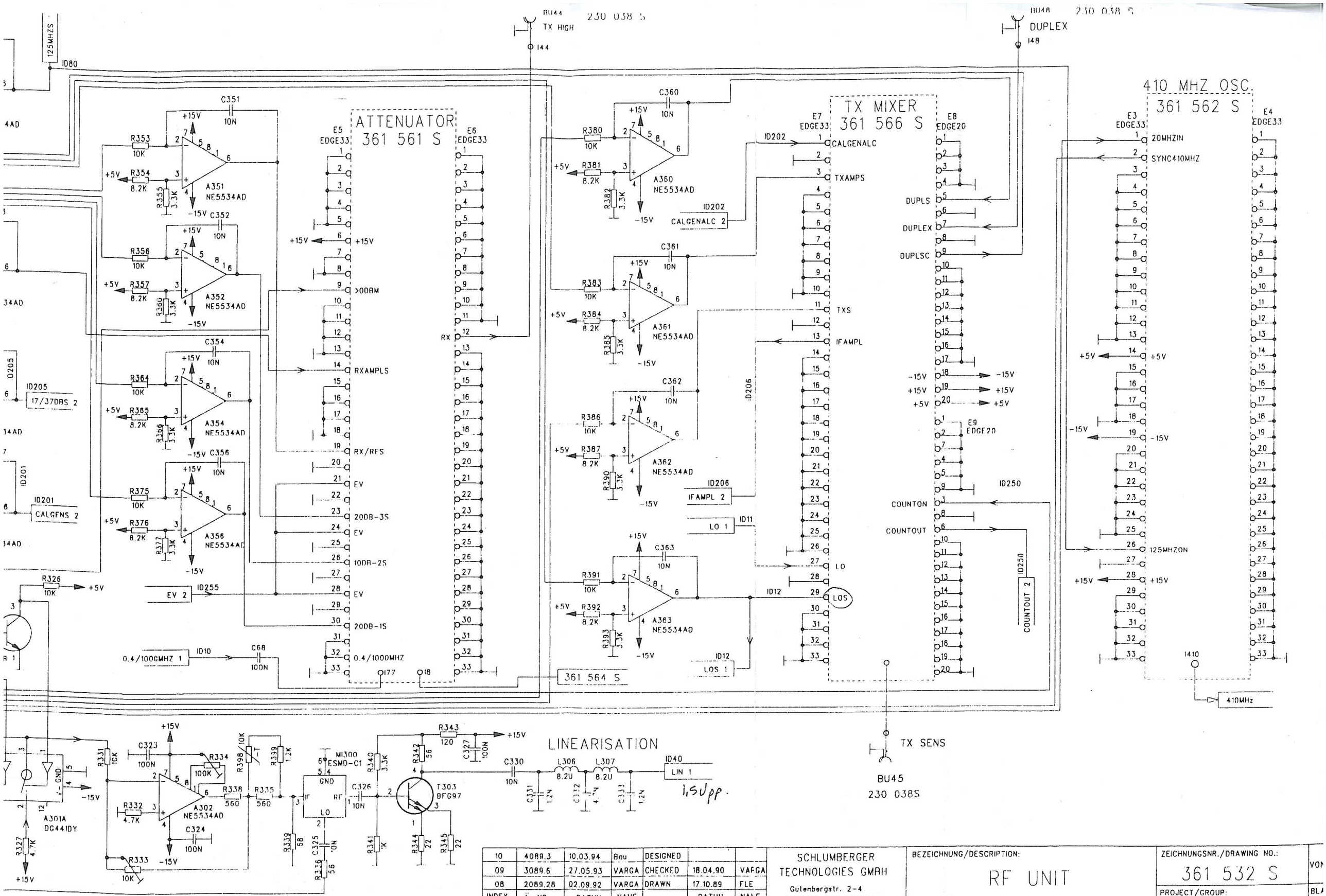

10	4089.3	10.03.94	Bau	DESIGNED			
09	3089.6	27.05.93	VARGA	CHECKED	18.04.90	VARGA	
08	2089.28	02.09.92	VARGA	DRAWN	17.10.89	FLE	
INDEX ISS.	Ä.-NR. MODIF.	DATUM DATE	NAME NAME		DATUM DATE	NAME NAME	

SCHLUMBERGER TECHNOLOGIES GMBH
Gutenbergstr. 2-4
85737 ISMANING

BEZEICHNUNG/DESCRIPTION:
RF UNIT

ZEICHNUNGSNR./DRAWING NO.:
361 532 S

PROJECT/GROUP:
4015 / 230 038 S

DIESE ZEICHNUNG IST UNSER EIGENTUM. VERVIELFALTIGUNG, UNBEFUGTE VERWERTUNG, MITTEILUNG AN ANDERE IST STRAFBAR UND SCHADENERSATZPFLICH

ID40
LIN 3

213038 S
SYNTHESE

361562 S
10 MHZ OSCILLATOR

AM MODULATOR

125 MHZ SWITCH

SELFCHECK

ID80
125MHZS 3

ID60
UHFSC 3

10	4089.3	10.03.94	Bau	DESIGNED		
09	3089.6	27.05.93	VARGA	CHECKED	18.04.90	VARGA
08	2089.28	02.09.92	VARGA	DRAWN	13.10.89	FLE.
INDEX ISS.	Ä.-NR. MODIF.	DATUM DATE	NAME NAME		DATUM DATE	NAME NAME

8 7 6 5 4

DIESE ZEICHNUNG IST

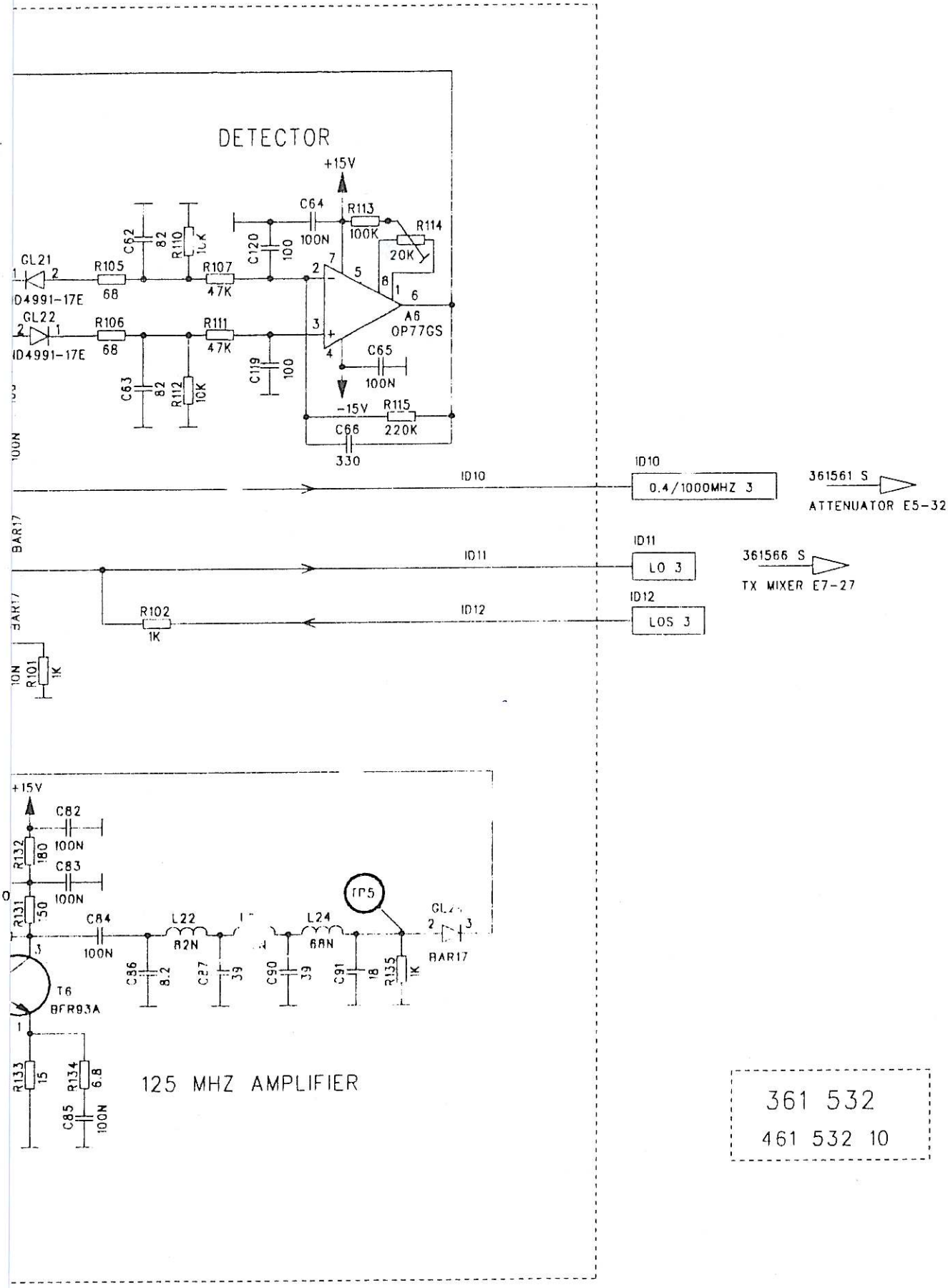

361 532
461 532 10

SCHLUMBERGER TECHNOLOGIES GMBH Gutenbergstr. 2-4 85737 ISMANING	BEZEICHNUNG/DESCRIPTION: RF UNIT	ZEICHNUNGSNR./DRAWING NO.: 361 532 S	1 VON/OF 3
		PROJECT/GROUP: 4015 / 230 038 S CJ	BLATT SHEET

INSER EIGENTUM. VERVIELFÄLTIGUNG, UNBEFUGTE VERWERTUNG, MITTEILUNG AN ANDERE IST STRAFBAR UND SCHADENERSATZPFLICHTIG.

This drawing is the property of SCHLUMBERGER. Reproduction, unauthorized use, communication to a third party is liable to prosecution and liable for damages.

Pos.	Benennung	Wert	HNK-Nr.	Herst.
A1	OPV	NE5534AD	834209	VALVO
A2	OPV	OP77GS	835200	ANALOG
A3	OPV	NE5534AD	834209	VALVO
A4	OPV	TL071CD	834227	TI
A5	OPV	NE5534AD	834209	VALVO
A6	OPV	OP77GS	835200	ANALOG
A200	OPV	NE5534AD	834209	VALVO
A201	Spannungsregler	LM78L05ACM	834246	NS
A300	OPV	TL071CD	834227	TI
A301	Analog Schalter	DG441DY	835336	SILI
A302	OPV	NE5534AD	834209	VALVO
A350	OPV	NE5534AD	834209	VALVO
A351	OPV	NE5534AD	834209	VALVO
A352	OPV	NE5534AD	834209	VALVO
A353	OPV	NE5534AD	834209	VALVO
A354	OPV	NE5534AD	834209	VALVO
A355	OPV	NE5534AD	834209	VALVO
A356	OPV	NE5534AD	834209	VALVO
A357	OPV	NE5534AD	834209	VALVO
A360	OPV	NE5534AD	834209	VALVO
A361	OPV	NE5534AD	834209	VALVO
A362	OPV	NE5534AD	834209	VALVO
A363	OPV	NE5534AD	834209	VALVO
C1	Kondensator X7R	10nF ±10% 50V-	813332	VITA
C2	Kondensator X7R	10nF ±10% 50V-	813332	VITA
C3	Kondensator X7R	10nF ±10% 50V-	813332	VITA
C4	Kondensator X7R	10nF ±10% 50V-	813332	VITA
C5	Kondensator X7R	10nF ±10% 50V-	813332	VITA

Schlumberger Technologies GmbH				Schaltteilliste	Anz. d. Seiten
10 Index	4089.13 Ä.-Nr.	14.3.1994 Datum	VA. Name	Bestückte Leiterplatte Typ: RF-UNIT	19
Erst.: VARGA		Gepr.:		361 532 Sa	Seite Nr
Gerät: 4015 / 230 038					1

Pos.	Benennung	Wert	HNK-Nr.	Herst.
C6	Kondensator X7R	10nF ±10% 50V-	813332	VIT
C7	Kondensator X7R	10nF ±10% 50V-	813332	VIT
C10	Kondensator X7R	10nF ±10% 50V-	813332	VIT
C11	Kondensator NP0	3.9pF ±0.25pF	813218	VIT
C12	Kondensator X7R	10nF ±10% 50V-	813332	VIT
C13	Kondensator X7R	10nF ±10% 50V-	813332	VIT
C14	Kondensator X7R	100nF ±10% 50V-	813375	VIT
C15	Kondensator NP0	3.9pF ±0.25pF	813218	VIT
C16	Kondensator X7R	10nF ±10% 50V-	813332	VIT
C17	Kondensator NP0	1nF ±5% 50V-	813247	VIT
C20	Kondensator NP0	1nF ±5% 50V-	813247	VIT
C21	Kondensator NP0	1nF ±5% 50V-	813247	VIT
C22	Kondensator NP0	1nF ±5% 50V-	813247	VIT
C27	Kondensator NP0	100pF ±5% 50V-	813235	VIT
C28	Kondensator NP0	270pF ±5% 50V-	813240	VIT
C30	Kondensator NP0	330pF ±5% 50V-	813241	VIT
C31	Kondensator NP0	330pF ±5% 50V-	813241	VIT
C32	Kondensator X7R	100nF ±10% 50V-	813375	VIT
C33	Kondensator X7R	100nF ±10% 50V-	813375	VIT
C34	Kondensator NP0	330pF ±5% 50V-	813241	VIT
C35	Kondensator X7R	100nF ±10% 50V-	813375	VIT
C36	Kondensator X7R	100nF ±10% 50V-	813375	VIT
C37	Kondensator NP0	560pF ±5% 50V-	813244	VIT
C39	Elko	22µF ±20% 25V-	814376	RÖD
C40	Kondensator X7R	10nF ±10% 50V-	813332	VIT
C41	Kondensator X7R	10nF ±10% 50V-	813332	VIT
C42	Kondensator X7R	10nF ±10% 50V-	813332	VIT
C43	Elko	22µF ±20% 25V-	814376	RÖD
C44	Kondensator X7R	10nF ±10% 50V-	813332	VIT

Schlumberger Technologies GmbH				Schaltteilliste	Anz. d. Seiten
10 Index	4089.13 Ä.Nr.	14.3.1994 Datum	VA. Name	Bestückte Leiterplatte Typ: RF-UNIT	19
Erst.: VARGA		Gepr.:		361 532 Sa	Seite Nr
Gerät: 4015 / 230 038					2

Pos.	Benennung	Wert	HNK-Nr.	Herst.
C6	Kondensator X7R	10nF ±10% 50V-	813332	VIT
C7	Kondensator X7R	10nF ±10% 50V-	813332	VIT
C10	Kondensator X7R	10nF ±10% 50V-	813332	VIT
C11	Kondensator NP0	3.9pF ±0.25pF	813218	VIT
C12	Kondensator X7R	10nF ±10% 50V-	813332	VIT
C13	Kondensator X7R	10nF ±10% 50V-	813332	VIT
C14	Kondensator X7R	100nF ±10% 50V-	813375	VIT
C15	Kondensator NP0	3.9pF ±0.25pF	813218	VIT
C16	Kondensator X7R	10nF ±10% 50V-	813332	VIT
C17	Kondensator NP0	1nF ±5% 50V-	813247	VIT
C20	Kondensator NP0	1nF ±5% 50V-	813247	VIT
C21	Kondensator NP0	1nF ±5% 50V-	813247	VIT
C22	Kondensator NP0	1nF ±5% 50V-	813247	VIT
C27	Kondensator NP0	100pF ±5% 50V-	813235	VIT
C28	Kondensator NP0	270pF ±5% 50V-	813240	VIT
C30	Kondensator NP0	330pF ±5% 50V-	813241	VIT
C31	Kondensator NP0	330pF ±5% 50V-	813241	VIT
C32	Kondensator X7R	100nF ±10% 50V-	813375	VIT
C33	Kondensator X7R	100nF ±10% 50V-	813375	VIT
C34	Kondensator NP0	330pF ±5% 50V-	813241	VIT
C35	Kondensator X7R	100nF ±10% 50V-	813375	VIT
C36	Kondensator X7R	100nF ±10% 50V-	813375	VIT
C37	Kondensator NP0	560pF ±5% 50V-	813244	VIT
C39	Elko	22µF ±20% 25V-	814376	RÖD
C40	Kondensator X7R	10nF ±10% 50V-	813332	VIT
C41	Kondensator X7R	10nF ±10% 50V-	813332	VIT
C42	Kondensator X7R	10nF ±10% 50V-	813332	VIT
C43	Elko	22µF ±20% 25V-	814376	RÖD
C44	Kondensator X7R	10nF ±10% 50V-	813332	VIT

Schlumberger Technologies GmbH				Schaltteilliste	Anz. d. Seiten
10 Index	4089.13 Ä.Nr.	14.3.1994 Datum	VA. Name	Bestückte Leiterplatte Typ: RF-UNIT	19
Erst.: VARGA		Gepr.:		361 532 Sa	Seite Nr
Gerät: 4015 / 230 038					2

Pos.	Benennung	Wert	HNK-Nr.	Herst.
C80	Kondensator X7R	100nF ±10% 50V-	813375	VIT
C81	Kondensator X7R	100nF ±10% 50V-	813375	VIT
C82	Kondensator X7R	100nF ±10% 50V-	813375	VIT
C83	Kondensator X7R	100nF ±10% 50V-	813375	VIT
C84	Kondensator X7R	100nF ±10% 50V-	813375	VIT
C85	Kondensator X7R	100nF ±10% 50V-	813375	VIT
C86	Kondensator NP0	8.2pF ±0.5pF	813222	VIT
C87	Kondensator NP0	39pF ±5% 50V-	813230	VIT
C88	Kondensator NP0	10pF ±5% 50V-	813223	VIT
C90	Kondensator NP0	39pF ±5% 50V-	813230	VIT
C91	Kondensator NP0	18pF ±5% 50V-	813226	VIT
C92	Kondensator NP0	12pF ±5% 50V-	813224	VIT
C93	Kondensator NP0	12pF ±5% 50V-	813224	VIT
C94	Kondensator NP0	27pF ±5% 50V-	813228	VIT
C95	Kondensator X7R	100nF ±10% 50V-	813375	VIT
C119	Kondensator NP0	100pF ±5% 50V-	813235	VIT
C120	Kondensator NP0	100pF ±5% 50V-	813235	VIT
C200	Kondensator NP0	1nF ±5% 50V-	813247	VIT
C201	Kondensator NP0	1nF ±5% 50V-	813247	VIT
C202	Kondensator NP0	330pF ±5% 50V-	813241	VIT
C203	Kondensator NP0	470pF ±5% 50V-	813243	VIT
C204	Kondensator NP0	330pF ±5% 50V-	813241	VIT
C205	Kondensator X7R	10nF ±10% 50V-	813332	VIT
C206	Kondensator X7R	100nF ±10% 50V-	813375	VIT
C207	Kondensator X7R	100nF ±10% 50V-	813375	VIT
C208	Elko	47µF ±20% 16V-	814386	RÖD
C209	Elko	47µF ±20% 16V-	814386	RÖD
C210	Kondensator X7R	100nF ±10% 50V-	813375	VIT
C211	Kondensator X7R	10nF ±10% 50V-	813332	VIT

Schlumberger Technologies GmbH				Schaltteilliste	Anz. d. Seiten
10 Index	4089.13 Ä.Nr.	14.3.1994 Datum	VA. Name	Bestückte Leiterplatte Typ: RF-UNIT	19
Erst.: VARGA		Gepr.:		361 532 Sa	Seite Nr
Gerät: 4015 / 230 038					4

Pos.	Benennung	Wert	HNK-Nr.	Herst.
A1	OPV	NE5534AD	834209	VAL
A2	OPV	OP77GS	835200	ANAL
A3	OPV	NE5534AD	834209	VAL
A4	OPV	TL071CD	834227	TI
A5	OPV	NE5534AD	834209	VAL
A6	OPV	OP77GS	835200	ANAL
A200	OPV	NE5534AD	834209	VAL
A201	Spannungsregler	LM78L05ACM	834246	NS
A300	OPV	TL071CD	834227	TI
A301	Analog Schalter	DG441DY	835336	SILI
A302	OPV	NE5534AD	834209	VAL
A350	OPV	NE5534AD	834209	VAL
A351	OPV	NE5534AD	834209	VAL
A352	OPV	NE5534AD	834209	VAL
A353	OPV	NE5534AD	834209	VAL
A354	OPV	NE5534AD	834209	VAL
A355	OPV	NE5534AD	834209	VAL
A356	OPV	NE5534AD	834209	VAL
A357	OPV	NE5534AD	834209	VAL
A360	OPV	NE5534AD	834209	VAL
A361	OPV	NE5534AD	834209	VAL
A362	OPV	NE5534AD	834209	VAL
A363	OPV	NE5534AD	834209	VAL
C1	Kondensator X7R	10nF ±10% 50V-	813332	VIT
C2	Kondensator X7R	10nF ±10% 50V-	813332	VIT
C3	Kondensator X7R	10nF ±10% 50V-	813332	VIT
C4	Kondensator X7R	10nF ±10% 50V-	813332	VIT
C5	Kondensator X7R	10nF ±10% 50V-	813332	VIT

Schlumberger Technologies GmbH				Schaltteilliste	Anz. d. Seiten
10 Index	4089.13 Ä.Nr.	14.3.1994 Datum	VA. Name	Bestückte Leiterplatte Typ: RF-UNIT	19
Erst.: VARGA		Gepr.:		361 532 Sa	Seite Nr
Gerät: 4015 / 230 038					1

Pos.	Benennung	Wert	HNK-Nr.	Herst.
C45	Kondensator X7R	10nF ±10% 50V-	813332	VIT
C46	Kondensator X7R	10nF ±10% 50V-	813332	VIT
C47	Kondensator X7R	10nF ±10% 50V-	813332	VIT
C48	Kondensator X7R	1nF ±10% 50V-	813320	VIT
C50	Kondensator X7R	10nF ±10% 50V-	813332	VIT
C51	Kondensator X7R	10nF ±10% 50V-	813332	VIT
C52	Kondensator X7R	100nF ±10% 50V-	813375	VIT
C53	Kondensator X7R	100nF ±10% 50V-	813375	VIT
C54	Kondensator X7R	100nF ±10% 50V-	813375	VIT
C55	Kondensator X7R	100nF ±10% 50V-	813375	VIT
C56	Kondensator NP0	8.2pF ±0.5pF	813222	VIT
C57	Kondensator X7R	100nF ±10% 50V-	813375	VIT
C60	Kondensator X7R	10nF ±10% 50V-	813332	VIT
C61	Kondensator X7R	100nF ±10% 50V-	813375	VIT
C62	Kondensator NP0	82pF ±5% 50V-	813234	VIT
C63	Kondensator NP0	82pF ±5% 50V-	813234	VIT
C64	Kondensator X7R	100nF ±10% 50V-	813375	VIT
C65	Kondensator X7R	100nF ±10% 50V-	813375	VIT
C66	Kondensator NP0	330pF ±5% 50V-	813241	VIT
C67	Kondensator X7R	10nF ±10% 50V-	813332	VIT
C68	Kondensator X7R	100nF ±10% 50V-	813375	VIT
C70	Kondensator NP0	39pF ±5% 50V-	813230	VIT
C71	Kondensator NP0	33pF ±5% 50V-	813229	VIT
C72	Kondensator NP0	15pF ±5% 50V-	813225	VIT
C73	Kondensator NP0	15pF ±5% 50V-	813225	VIT
C74	Kondensator X7R	100nF ±10% 50V-	813375	VIT
C75	Kondensator X7R	100nF ±10% 50V-	813375	VIT
C76	Kondensator X7R	100nF ±10% 50V-	813375	VIT
C77	Kondensator X7R	100nF ±10% 50V-	813375	VIT

Pos.	Benennung	Wert	HNK-Nr.	Herst.
C212	Kondensator X7R	100nF ±10% 50V-	813375	VIT
C213	Kondensator X7R	100nF ±10% 50V-	813375	VIT
C214	Kondensator X7R	10nF ±10% 50V-	813332	VIT
C215	Kondensator X7R	10nF ±10% 50V-	813332	VIT
C217	Elko	2.2µF ±20% 50V-	814362	RÖD
C223	Elko	47µF ±20% 16V-	814386	RÖD
C224	Elko	22µF ±20% 25V-	814376	RÖD
C225	Elko	100µF ±20% 6.3V	814394	RÖD
C226	Elko	100µF ±20% 6.3V	814394	RÖD
C229	Elko	10µF ±20% 16V-	814382	RÖD
C250	Kondensator X7R	100nF ±10% 50V-	813375	VIT
C251	Kondensator X7R	100nF ±10% 50V-	813375	VIT
C252	Kondensator X7R	100nF ±10% 50V-	813375	VIT
C253	Kondensator X7R	100nF ±10% 50V-	813375	VIT
C254	Kondensator X7R	100nF ±10% 50V-	813375	VIT
C255	Kondensator NP0	47pF ±5% 50V-	813231	VIT
C256	Kondensator X7R	100nF ±10% 50V-	813375	VIT
C257	Kondensator NP0	18pF ±5% 50V-	813226	VIT
C260	Kondensator X7R	100nF ±10% 50V-	813375	VIT
C261	Kondensator X7R	100nF ±10% 50V-	813375	VIT
C262	Kondensator X7R	100nF ±10% 50V-	813375	VIT
C263	Elko	22µF ±20% 25V-	814376	RÖD
C264	Elko	22µF ±20% 25V-	814376	RÖD
C265	Kondensator NP0	100pF ±5% 50V-	813235	VIT
C290	Kondensator NP0	8.2pF ±0.5pF	813222	VIT
C293	Kondensator X7R	100nF ±10% 50V-	813375	VIT
C294	Kondensator X7R	100nF ±10% 50V-	813375	VIT
C295	Kondensator X7R	10nF ±10% 50V-	813332	VIT
C296	Kondensator X7R	10nF ±10% 50V-	813332	VIT

Pos.	Benennung	Wert	HNK-Nr.	Herst.
C297	Kondensator NP0	1.8nF ±5% 50V-	813250	VIT
C300	Kondensator X7R	100nF ±10% 50V-	813375	VIT
C301	Kondensator X7R	100nF ±10% 50V-	813375	VIT
C302	Kondensator X7R	100nF ±10% 50V-	813375	VIT
C303	Kondensator X7R	100nF ±10% 50V-	813375	VIT
C304	Kondensator X7R	100nF ±10% 50V-	813375	VIT
C305	Kondensator X7R	100nF ±10% 50V-	813375	VIT
C310	Kondensator NP0	1nF ±5% 50V-	813247	VIT
C311	Kondensator NP0	1nF ±5% 50V-	813247	VIT
C312	Elko	22µF ±20% 25V-	814376	RÖD
C313	Kondensator X7R	100nF ±10% 50V-	813375	VIT
C314	Kondensator X7R	100nF ±10% 50V-	813375	VIT
C315	Kondensator X7R	10nF ±10% 50V-	813332	VIT
C316	Kondensator X7R	4.7nF ±10% 50V-	813328	VIT
C317	Kondensator X7R	4.7nF ±10% 50V-	813328	VIT
C320	Kondensator X7R	10nF ±10% 50V-	813332	VIT
C321	Kondensator X7R	100nF ±10% 50V-	813375	VIT
C322	Kondensator X7R	100nF ±10% 50V-	813375	VIT
C323	Kondensator X7R	100nF ±10% 50V-	813375	VIT
C324	Kondensator X7R	100nF ±10% 50V-	813375	VIT
C325	Kondensator X7R	10nF ±10% 50V-	813332	VIT
C326	Kondensator X7R	10nF ±10% 50V-	813332	VIT
C327	Kondensator X7R	100nF ±10% 50V-	813375	VIT
C330	Kondensator X7R	10nF ±10% 50V-	813332	VIT
C331	Kondensator NP0	1.2nF ±5% 50V-	813248	VIT
C332	Kondensator NP0	4.7nF ±5% 50V-	813255	VIT
C333	Kondensator NP0	1.2nF ±5% 50V-	813248	VIT
C350	Kondensator X7R	10nF ±10% 50V-	813332	VIT
C351	Kondensator X7R	10nF ±10% 50V-	813332	VIT

Pos.	Benennung	Wert	HNK-Nr.	Herst.
C352	Kondensator X7R	10nF ±10% 50V-	813332	VIT
C353	Kondensator X7R	10nF ±10% 50V-	813332	VIT
C354	Kondensator X7R	10nF ±10% 50V-	813332	VIT
C355	Kondensator X7R	10nF ±10% 50V-	813332	VIT
C356	Kondensator X7R	10nF ±10% 50V-	813332	VIT
C357	Kondensator X7R	10nF ±10% 50V-	813332	VIT
C360	Kondensator X7R	10nF ±10% 50V-	813332	VIT
C361	Kondensator X7R	10nF ±10% 50V-	813332	VIT
C362	Kondensator X7R	10nF ±10% 50V-	813332	VIT
C363	Kondensator X7R	10nF ±10% 50V-	813332	VIT
C370	Elko	100µF ±20% 6.3V	814394	RÖD
C371	Kondensator Z5U	1µF ±20% 50V-	813390	VIT
C372	Kondensator Z5U	1µF ±20% 50V-	813390	VIT
C373	Kondensator X7R	100nF ±10% 50V-	813375	VIT
C374	Elko	100µF ±20% 6.3V	814394	RÖD
C375	Kondensator NP0	33pF ±5% 50V-	813229	VIT
C376	Kondensator NP0	33pF ±5% 50V-	813229	VIT
C396	Kondensator NP0	330pF ±5% 50V-	813241	VIT
C397	Kondensator NP0	330pF ±5% 50V-	813241	VIT
D250	Frequenzteiler 1:64/256	SDA4212	835357	SIE
D251	NAND-Gatter	PC74HCT00T	834430	VAL
D252	Up/Down Counter	SN74AS169AD	835322	TI
D253	Up/Down Counter	SN74AS169AD	835322	TI
D300	Inverter	PC74HCT04T	834432	VAL
D301	Decade Counter	PC74HCT390T	834438	VAL
GL1	PIN-Diode	BA885	830533	SIE
GL2	PIN-Diode	BA885	830533	SIE

Pos.	Benennung	Wert	HNK-Nr.	Herst.
GL3	PIN-Diode	BA885	830533	SIE
GL4	PIN-Diode	BA885	830533	SIE
GL5	PIN-Diode	BA885	830533	SIE
GL6	PIN-Diode	BA885	830533	SIE
GL7	PIN-Diode	BA885	830533	SIE
GL10	Diode	BAS16	830552	VAL
GL11	Schottky-Diode	ND4991-17E	830508	NEC
GL12	Schottky-Diode	ND4991-17E	830508	NEC
GL13	Schottky-Diode	ND4991-17E	830508	NEC
GL14	PIN-Diode	BAR17	830534	SIE
GL15	PIN-Diode	BAR17	830534	SIE
GL16	PIN-Diode	BAR17	830534	SIE
GL17	PIN-Diode	BAR17	830534	SIE
GL20	PIN-Diode	BAR17	830534	SIE
GL21	Schottky-Diode	ND4991-17E	830508	NEC
GL22	Schottky-Diode	ND4991-17E	830508	NEC
GL23	PIN-Diode	BAR17	830534	SIE
GL24	PIN-Diode	BAR17	830534	SIE
GL200	PIN-Diode	BAR17	830534	SIE
GL201	PIN-Diode	BAR17	830534	SIE
GL202	PIN-Diode	BAR17	830534	SIE
GL203	PIN-Diode	BAR17	830534	SIE
GL204	Schottky-Diode	ND4991-17E	830508	NEC
GL206	PIN-Diode	BAR17	830534	SIE
GL207	Diode	BAS16	830552	VAL
GL208	Diode	BAV99	830491	VAL
GL222	Schottky-Diode	ND4991-17E	830508	NEC
GL300	Diode	BAS16	830552	VAL
GL301	Zenerdiode	1N827	830413	MOT

Pos.	Benennung	Wert	HNK-Nr.	Herst.
L1	Keramik-Spule	33nH ±10%	821209	STET
L2	Keramik-Spule	1µH ±5%	821227	STET
L3	Keramik-Spule	22nH ±20%	821208	STET
L4	Keramik-Spule	1µH ±5%	821227	STET
L5	Keramik-Spule	1µH ±5%	821227	STET
L6	Keramik-Spule	1µH ±5%	821227	STET
L7	Keramik-Spule	1µH ±5%	821227	STET
L10	Keramik-Spule	1µH ±5%	821227	STET
L11	Keramik-Spule	1µH ±5%	821227	STET
L12	Keramik-Spule	33nH ±10%	821209	STET
L13	Keramik-Spule	1µH ±5%	821227	STET
L14	Keramik-Spule	1µH ±5%	821227	STET
L15	Keramik-Spule	82nH ±5%	821214	STET
L16	Keramik-Spule	100nH ±5%	821215	STET
L17	Keramik-Spule	82nH ±5%	821214	STET
L20	Keramik-Spule	56nH ±5%	821212	STET
L21	Keramik-Spule	22nH ±20%	821208	STET
L22	Keramik-Spule	82nH ±5%	821214	STET
L23	Keramik-Spule	82nH ±5%	821214	STET
L24	Keramik-Spule	68nH ±5%	821213	STET
L25	Keramik-Spule	33nH ±10%	821209	STET
L26	Keramik-Spule	39nH ±10%	821210	STET
L27	Keramik-Spule	150nH ±5%	821217	STET
L200	Keramik-Spule	330nH ±5%	821221	STET
L201	Keramik-Spule	330nH ±5%	821221	STET
L202	Keramik-Spule	1µH ±5%	821227	STET
L250	Keramik-Spule	220nH ±5%	821219	STET
L251	Keramik-Spule	220nH ±5%	821219	STET

Pos.	Benennung	Wert	HNK-Nr.	Herst.
L300	Keramik-Spule	100nH ±5%	821215	STET
L301	Keramik-Spule	100nH ±5%	821215	STET
L302	Keramik-Spule	1µH ±5%	821227	STET
L303	Keramik-Spule	1µH ±5%	821227	STET
L304	Keramik-Spule	1µH ±5%	821227	STET
L305	Keramik-Spule	8.2µH ±10%	821238	STET
L306	Keramik-Spule	8.2µH ±10%	821238	STET
L307	Keramik-Spule	8.2µH ±10%	821238	STET
L320	Ferrit-Spule	330µH ±15%	821325	SIE
L321	Keramik-Spule	10µH ±10%	821239	STET
L322	Keramik-Spule	1µH ±5%	821227	STET
L323	Keramik-Spule	10µH ±10%	821239	STET
L324	Keramik-Spule	10µH ±10%	821239	STET
L325	Keramik-Spule	1µH ±5%	821227	STET
L390	Keramik-Spule	330nH ±5%	821221	STET
MI1	Mischer	ESMD-C1	872082	EURO
MI300	Mischer	ESMD-C1	872082	EURO
Q300	Quarzoszillator	20 MHz	853307	TELEQ
R1	Chip-Widerstand	8.2kΩ ±1%	804748	VAL
R2	Chip-Widerstand	10kΩ ±1%	804749	VAL
R3	Chip-Widerstand	15kΩ ±1%	804751	VAL
R4	Chip-Widerstand	470Ω ±1%	804733	VAL
R5	Chip-Widerstand	3.3kΩ ±1%	804743	VAL
R6	Chip-Widerstand	12kΩ ±1%	804750	VAL
R7	Chip-Widerstand	1.2kΩ ±1%	804738	VAL
R10	Chip-Widerstand	220Ω ±1%	804729	VAL

Schlumberger Technologies GmbH				Schaltteilliste	Anz. d. Seiten
10 Index	4089.13 Ä.Nr.	14.3.1994 Datum	VA. Name	Bestückte Leiterplatte Typ: RF-UNIT	19
Erst.: VARGA		Gepr.:		361 532 Sa	Seite Nr
Gerät: 4015 / 230 038					10

Pos.	Benennung	Wert	HNK-Nr.	Herst.
R11	Chip-Widerstand	330Ω ±1%	804731	VAL
R12	Chip-Widerstand	180Ω ±1%	804728	VAL
R13	Chip-Widerstand	22Ω ±5%	804717	VAL
R14	Chip-Widerstand	22Ω ±5%	804717	VAL
R15	Chip-Widerstand	2.2Ω ±5%	804705	VAL
R16	Chip-Widerstand	10kΩ ±1%	804749	VAL
R17	Chip-Widerstand	180Ω ±1%	804728	VAL
R20	Chip-Widerstand	220Ω ±1%	804729	VAL
R21	Chip-Widerstand	150Ω ±1%	804727	VAL
R22	Chip-Widerstand	1.2kΩ ±1%	804738	VAL
R23	Chip-Widerstand	22Ω ±5%	804717	VAL
R24	Chip-Widerstand	22Ω ±5%	804717	VAL
R25	Chip-Widerstand	2.2Ω ±5%	804705	VAL
R26	Chip-Widerstand	1kΩ ±1%	804737	VAL
R27	Chip-Widerstand	470Ω ±1%	804733	VAL
R28	Chip-Widerstand	18Ω ±5%	804716	VAL
R30	Chip-Widerstand	560Ω ±1%	804734	VAL
R31	Chip-Widerstand	560Ω ±1%	804734	VAL
R32	Chip-Widerstand	10kΩ ±1%	804749	VAL
R33	Chip-Widerstand	10kΩ ±1%	804749	VAL
R34	Chip-Widerstand	1kΩ ±1%	804737	VAL
R40	Chip-Widerstand	100Ω ±1%	804725	VAL
R41	Chip-Widerstand	68Ω ±5%	804723	VAL
R42	Chip-Widerstand	68Ω ±5%	804723	VAL
R43	Chip-Widerstand	10kΩ ±1%	804749	VAL
R44	Chip-Widerstand	10kΩ ±1%	804749	VAL
R45	Chip-Widerstand	47kΩ ±1%	804757	VAL
R46	Chip-Widerstand	47kΩ ±1%	804757	VAL
R47	Potentiometer	20kΩ ±25%	807741	BOURNS

Schlumberger Technologies GmbH				Schaltteilliste	Anz. d. Seiten
10 Index	4089.13 Ä.Nr.	14.3.1994 Datum	VA. Name	Bestückte Leiterplatte Typ: RF-UNIT	19
Erst.: VARGA		Gepr.:		361 532 Sa	Seite Nr
Gerät: 4015 / 230 038					11

Pos.	Benennung	Wert	HNK-Nr.	Herst.
R50	Chip-Widerstand	100kΩ ±1%	804761	VAL
R51	Chip-Widerstand	220kΩ ±1%	804765	VAL
R52	Chip-Widerstand	1.5kΩ ±1%	804739	VAL
R53	Chip-Widerstand	1.5kΩ ±1%	804739	VAL
R54	Chip-Widerstand	10kΩ ±1%	804749	VAL
R60	Chip-Widerstand	1kΩ ±1%	804737	VAL
R61	Chip-Widerstand	3.3kΩ ±1%	804743	VAL
R62	Chip-Widerstand	1.2kΩ ±1%	804738	VAL
R63	Chip-Widerstand	12kΩ ±1%	804750	VAL
R64	Chip-Widerstand	10kΩ ±1%	804749	VAL
R65	Chip-Widerstand	1kΩ ±1%	804737	VAL
R66	Chip-Widerstand	10kΩ ±1%	804749	VAL
R67	Chip-Widerstand	10kΩ ±1%	804749	VAL
R70	Chip-Widerstand	560Ω ±1%	804734	VAL
R71	Chip-Widerstand	15kΩ ±1%	804751	VAL
R72	Chip-Widerstand	10kΩ ±1%	804749	VAL
R73	Chip-Widerstand	0Ω	804700	VAL
R74	Chip-Widerstand	68Ω ±5%	804723	VAL
R80	Chip-Widerstand	820Ω ±1%	804736	VAL
R81	Chip-Widerstand	1kΩ ±1%	804737	VAL
R82	Chip-Widerstand	22kΩ ±1%	804753	VAL
R83	Chip-Widerstand	820Ω ±1%	804736	VAL
R84	Chip-Widerstand	1kΩ ±1%	804737	VAL
R85	Chip-Widerstand	22kΩ ±1%	804753	VAL
R86	Chip-Widerstand	10kΩ ±1%	804749	VAL
R87	Chip-Widerstand	10Ω ±5%	804713	VAL
R88	Chip-Widerstand	390Ω ±1%	804732	VAL
R90	Chip-Widerstand	8.2kΩ ±1%	804748	VAL
R91	Chip-Widerstand	820Ω ±1%	804736	VAL

Schlumberger Technologies GmbH				Schaltteilliste	Anz. d. Seiten
10 Index	4089.13 Ä.Nr.	14.3.1994 Datum	VA. Name	Bestückte Leiterplatte Typ: RF-UNIT	19
Erst.: VARGA		Gepr.:		361 532 Sa	Seite Nr
Gerät: 4015 / 230 038					12

Pos.	Benennung	Wert	HNK-Nr.	Herst.
R92	Chip-Widerstand	220Ω ±1%	804729	VAL
R93	Chip-Widerstand	220Ω ±1%	804729	VAL
R94	Chip-Widerstand	82Ω ±5%	804724	VAL
R95	Chip-Widerstand	18Ω ±5%	804716	VAL
R96	Chip-Widerstand	18Ω ±5%	804716	VAL
R97	Chip-Widerstand	2.2Ω ±5%	804705	VAL
R100	Chip-Widerstand	1kΩ ±1%	804737	VAL
R101	Chip-Widerstand	1kΩ ±1%	804737	VAL
R102	Chip-Widerstand	1kΩ ±1%	804737	VAL
R103	Chip-Widerstand	100Ω ±1%	804725	VAL
R104	Chip-Widerstand	1kΩ ±1%	804737	VAL
R105	Chip-Widerstand	68Ω ±5%	804723	VAL
R106	Chip-Widerstand	68Ω ±5%	804723	VAL
R107	Chip-Widerstand	47kΩ ±1%	804757	VAL
R110	Chip-Widerstand	10kΩ ±1%	804749	VAL
R111	Chip-Widerstand	47kΩ ±1%	804757	VAL
R112	Chip-Widerstand	10kΩ ±1%	804749	VAL
R113	Chip-Widerstand	100kΩ ±1%	804761	VAL
R114	Potentiometer	20kΩ ±25%	807741	BOURNS
R115	Chip-Widerstand	220kΩ ±1%	804765	VAL
R116	Chip-Widerstand	68Ω ±5%	804723	VAL
R117	Chip-Widerstand	220Ω ±1%	804729	VAL
R118	Chip-Widerstand	68Ω ±5%	804723	VAL
R120	Chip-Widerstand	1kΩ ±1%	804737	VAL
R121	Chip-Widerstand	10kΩ ±1%	804749	VAL
R122	Chip-Widerstand	390Ω ±1%	804732	VAL
R123	Chip-Widerstand	220Ω ±1%	804729	VAL
R124	Chip-Widerstand	270Ω ±1%	804730	VAL
R125	Chip-Widerstand	27Ω ±5%	804718	VAL

Pos.	Benennung	Wert	HNK-Nr.	Herst.
R126	Chip-Widerstand	10Ω ±5%	804713	VAL
R127	Chip-Widerstand	1kΩ ±1%	804737	VAL
R130	Chip-Widerstand	10kΩ ±1%	804749	VAL
R131	Chip-Widerstand	150Ω ±1%	804727	VAL
R132	Chip-Widerstand	180Ω ±1%	804728	VAL
R133	Chip-Widerstand	15Ω ±5%	804715	VAL
R134	Chip-Widerstand	6.8Ω ±5%	804711	VAL
R135	Chip-Widerstand	1kΩ ±1%	804737	VAL
R136	Chip-Widerstand	47Ω ±5%	804721	VAL
R200	Chip-Widerstand	1kΩ ±1%	804737	VAL
R201	Chip-Widerstand	1kΩ ±1%	804737	VAL
R202	Chip-Widerstand	82Ω ±5%	804724	VAL
R203	Chip-Widerstand	120Ω ±1%	804726	VAL
R204	Chip-Widerstand	470Ω ±1%	804733	VAL
R205	Chip-Widerstand	82Ω ±5%	804724	VAL
R206	Chip-Widerstand	220Ω ±1%	804729	VAL
R207	Chip-Widerstand	1kΩ ±1%	804737	VAL
R208	Chip-Widerstand	2.7kΩ ±1%	804742	VAL
R209	Chip-Widerstand	2.7kΩ ±1%	804742	VAL
R210	Chip-Widerstand	1kΩ ±1%	804737	VAL
R211	Chip-Widerstand	1kΩ ±1%	804737	VAL
R212	Chip-Widerstand	68Ω ±5%	804723	VAL
R213	Chip-Widerstand	10kΩ ±1%	804749	VAL
R214	Chip-Widerstand	10kΩ ±1%	804749	VAL
R215	Chip-Widerstand	330kΩ ±1%	804767	VAL
R216	Chip-Widerstand	100kΩ ±1%	804761	VAL
R217	Chip-Widerstand	39Ω ±5%	804720	VAL
R220	Chip-Widerstand	5.6kΩ ±1%	804746	VAL
R221	Chip-Widerstand	100kΩ ±1%	804761	VAL

Pos.	Benennung	Wert	HNK-Nr.	Herst.
R222	Chip-Widerstand	270Ω ±1%	804730	VAL
R224	Chip-Widerstand	100kΩ ±1%	804761	VAL
R225	Chip-Widerstand	10kΩ ±1%	804749	VAL
R227	Chip-Widerstand	3.3kΩ ±1%	804743	VAL
R231	Chip-Widerstand	3.9kΩ ±1%	804744	VAL
R232	Chip-Widerstand	2.2kΩ ±1%	804741	VAL
R233	Chip-Widerstand	3.9kΩ ±1%	804744	VAL
R234	Chip-Widerstand	33kΩ ±1%	804755	VAL
R235	Chip-Widerstand	33kΩ ±1%	804755	VAL
R236	Chip-Widerstand	390Ω ±1%	804732	VAL
R237	Chip-Widerstand	470Ω ±1%	804733	VAL
R240	Chip-Widerstand	3.3kΩ ±1%	804743	VAL
R241	Chip-Widerstand	150Ω ±1%	804727	VAL
R242	Chip-Widerstand	10Ω ±5%	804713	VAL
R243	Chip-Widerstand	10Ω ±5%	804713	VAL
R244	Chip-Widerstand	150Ω ±1%	804727	VAL
R250	Chip-Widerstand	10kΩ ±1%	804749	VAL
R251	Chip-Widerstand	270Ω ±1%	804730	VAL
R252	Chip-Widerstand	6.8kΩ ±1%	804747	VAL
R253	Chip-Widerstand	330Ω ±1%	804731	VAL
R254	Chip-Widerstand	220Ω ±1%	804729	VAL
R255	Chip-Widerstand	10kΩ ±1%	804749	VAL
R256	Chip-Widerstand	5.6kΩ ±1%	804746	VAL
R292	Chip-Widerstand	560Ω ±1%	804734	VAL
R293	Chip-Widerstand	560Ω ±1%	804734	VAL
R294	Chip-Widerstand	10Ω ±5%	804713	VAL
R295	Chip-Widerstand	100Ω ±1%	804725	VAL
R296	Chip-Widerstand	1kΩ ±1%	804737	VAL
R298	Chip-Widerstand	10kΩ ±1%	804749	VAL

Pos.	Benennung	Wert	HNK-Nr.	Herst.
R299	Chip-Widerstand	220Ω ±1%	804729	VAL
R300	Chip-Widerstand	22kΩ ±1%	804753	VAL
R301	Heißleiter	47kΩ ±20%	805022	SIE
R302	Chip-Widerstand	18kΩ ±1%	804752	VAL
R303	Chip-Widerstand	470Ω ±1%	804733	VAL
R304	Chip-Widerstand	2.2kΩ ±1%	804741	VAL
R306	Chip-Widerstand	0Ω	804700	VAL
R307	Chip-Widerstand	820Ω ±1%	804736	VAL
R308	Chip-Widerstand	150kΩ ±1%	804763	VAL
R309	Chip-Widerstand	1kΩ ±1%	804737	VAL
R310	Chip-Widerstand	1kΩ ±1%	804737	VAL
R311	Chip-Widerstand	1kΩ ±1%	804737	VAL
R312	Chip-Widerstand	15kΩ ±1%	804751	VAL
R313	Cermet Trimmpoti	20kΩ ±10%	807696	VIT
R314	Chip-Widerstand	1kΩ ±1%	804737	VAL
R315	Chip-Widerstand	10Ω ±5%	804713	VAL
R316	Chip-Widerstand	68Ω ±5%	804723	VAL
R317	Chip-Widerstand	120Ω ±1%	804726	VAL
R320	Chip-Widerstand	68Ω ±5%	804723	VAL
R321	Chip-Widerstand	56Ω ±5%	804722	VAL
R322	Chip-Widerstand	180Ω ±1%	804728	VAL
R323	Chip-Widerstand	1kΩ ±1%	804737	VAL
R324	Chip-Widerstand	1kΩ ±1%	804737	VAL
R325	Chip-Widerstand	4.7kΩ ±1%	804745	VAL
R326	Chip-Widerstand	10kΩ ±1%	804749	VAL
R327	Chip-Widerstand	4.7kΩ ±1%	804745	VAL
R329	Chip-Widerstand	68kΩ ±1%	804759	VAL
R330	Chip-Widerstand	100kΩ ±1%	804761	VAL
R331	Chip-Widerstand	10kΩ ±1%	804749	VAL

Pos.	Benennung	Wert	HNK-Nr.	Herst.
R332	Chip-Widerstand	4.7kΩ ±1%	804745	VAL
R333	Potentiometer	10kΩ ±25%	807740	BOURNS
R334	Potentiometer	100kΩ ±25%	807743	BOURNS
R335	Chip-Widerstand	560Ω ±1%	804734	VAL
R336	Chip-Widerstand	56Ω ±5%	804722	VAL
R337	Chip-Widerstand	180Ω ±1%	804728	VAL
R338	Chip-Widerstand	560Ω ±1%	804734	VAL
R339	Chip-Widerstand	68Ω ±5%	804723	VAL
R340	Chip-Widerstand	3.3kΩ ±1%	804743	VAL
R341	Chip-Widerstand	1kΩ ±1%	804737	VAL
R342	Chip-Widerstand	56Ω ±5%	804722	VAL
R343	Chip-Widerstand	120Ω ±1%	804726	VAL
R344	Chip-Widerstand	22Ω ±5%	804717	VAL
R345	Chip-Widerstand	22Ω ±5%	804717	VAL
R350	Chip-Widerstand	10kΩ ±1%	804749	VAL
R351	Chip-Widerstand	8.2kΩ ±1%	804748	VAL
R352	Chip-Widerstand	3.3kΩ ±1%	804743	VAL
R353	Chip-Widerstand	10kΩ ±1%	804749	VAL
R354	Chip-Widerstand	8.2kΩ ±1%	804748	VAL
R355	Chip-Widerstand	3.3kΩ ±1%	804743	VAL
R356	Chip-Widerstand	10kΩ ±1%	804749	VAL
R357	Chip-Widerstand	8.2kΩ ±1%	804748	VAL
R360	Chip-Widerstand	3.3kΩ ±1%	804743	VAL
R361	Chip-Widerstand	10kΩ ±1%	804749	VAL
R362	Chip-Widerstand	8.2kΩ ±1%	804748	VAL
R363	Chip-Widerstand	3.3kΩ ±1%	804743	VAL
R364	Chip-Widerstand	10kΩ ±1%	804749	VAL
R365	Chip-Widerstand	8.2kΩ ±1%	804748	VAL
R366	Chip-Widerstand	3.3kΩ ±1%	804743	VAL

Pos.	Benennung	Wert	HNK-Nr.	Herst.
R367	Chip-Widerstand	8.2kΩ ±1%	804748	VAL
R370	Chip-Widerstand	10kΩ ±1%	804749	VAL
R371	Chip-Widerstand	3.3kΩ ±1%	804743	VAL
R372	Chip-Widerstand	10kΩ ±1%	804749	VAL
R373	Chip-Widerstand	8.2kΩ ±1%	804748	VAL
R374	Chip-Widerstand	3.3kΩ ±1%	804743	VAL
R375	Chip-Widerstand	10kΩ ±1%	804749	VAL
R376	Chip-Widerstand	8.2kΩ ±1%	804748	VAL
R377	Chip-Widerstand	3.3kΩ ±1%	804743	VAL
R380	Chip-Widerstand	10kΩ ±1%	804749	VAL
R381	Chip-Widerstand	8.2kΩ ±1%	804748	VAL
R382	Chip-Widerstand	3.3kΩ ±1%	804743	VAL
R383	Chip-Widerstand	10kΩ ±1%	804749	VAL
R384	Chip-Widerstand	8.2kΩ ±1%	804748	VAL
R385	Chip-Widerstand	3.3kΩ ±1%	804743	VAL
R386	Chip-Widerstand	10kΩ ±1%	804749	VAL
R387	Chip-Widerstand	8.2kΩ ±1%	804748	VAL
R390	Chip-Widerstand	3.3kΩ ±1%	804743	VAL
R391	Chip-Widerstand	10kΩ ±1%	804749	VAL
R392	Chip-Widerstand	8.2kΩ ±1%	804748	VAL
R393	Chip-Widerstand	3.3kΩ ±1%	804743	VAL
R398	Heißleiter 642	10kΩ ±10%	805020	VAL
R399	Chip-Widerstand	1.2kΩ ±1%	804738	VAL
ST67	Stiftleiste 90°	40polig	884486	AMP
T2	NPN Transistor	BFR93A	832287	VAL
T3	PNP Transistor	BC860B	832285	VAL
T4	NPN Transistor	BFR93A	832287	VAL

Schlumberger Technologies GmbH				Schaltteilliste	Anz. d. Seiten
10 Index	4089.13 Ä.Nr.	14.3.1994 Datum	VA. Name	Bestückte Leiterplatte Typ: RF-UNIT	19
Erst.: VARGA		Gepr.:		361 532 Sa	Seite Nr
Gerät: 4015 / 230 038					18

Pos.	Benennung	Wert	HNK-Nr.	Herst.
T5	NPN Transistor	BFR93A	832287	VAL
T6	NPN Transistor	BFR93A	832287	VAL
T14	NPN Transistor	BFR93A	832287	VAL
T200	NPN Transistor	BC850B	832284	SIE
T201	NPN Transistor	BFS19	832286	VAL
T202	PNP Transistor	BC860B	832285	VAL
T203	PNP Transistor	BC860B	832285	VAL
T204	NPN Transistor	BC850B	832284	SIE
T205	PNP Transistor	BC860B	832285	VAL
T208	NPN Transistor	BCV27	832295	SIE
T209	PNP Transistor	BCV26	832294	SIE
T250	NPN Transistor	BFR93A	832287	VAL
T251	NPN Transistor	BFS19	832286	VAL
T252	PNP Transistor	BCX51-16	832283	SIE
T303	NPN Transistor	BFG97	832296	VAL
T310	NPN Transistor	BC850B	832284	SIE
T311	NPN Transistor	BC850B	832284	SIE
T312	NPN Transistor	BC850B	832284	SIE

Schlumberger Technologies GmbH				Schaltteilliste	Anz. d. Seiten
10 Index	4089.13 Ä.Nr.	14.3.1994 Datum	VA. Name	Bestückte Leiterplatte Typ: RF-UNIT	19
Erst.: VARGA		Gepr.:		361 532 Sa	Seite Nr
Gerät: 4015 / 230 038					19

361532 S

20DB-1S EV 10DB-2S EV 20DB-3S EV RX/RFS >0 DBM RX-AMPLS

CONTROL

RX AMPLIFIER

K5/230 038S
0.4/1000MHZ
I2

I1 ATTEN.
TO 361564 S
POWER SPLITTER

20DB 10DB 20DB

0,4...1000 MHZ
TO BU44
230 038 S
RXHIGH

361 561
461 561 07

361532 S

08	4089.3	15.03.94	Bau	DESIGNED			SCHLUMBERGER TECHNOLOGIES GMBH Gutenbergstr. 2-4 85737 ISMANING
07	3089.5	19.04.93	VARGA	CHECKED			
06	2089.28	30.08.92	VARGA	DRAWN	25.9.89	FLE	
INDEX ISS.	Ä.-NR. MODIF.	DATUM DATE	NAME NAME		DATUM DATE	NAME NAME	

BEZEICHNUNG/DESCRIPTION: ATTENUATOR

ZEICHNUNGSNR./DRAWING NO.: 361 561 S

PROJECT/GROUP: 4015 / 230 038 S

1 VON/OF 1

BLATT SHEET

This drawing is the property of SCHLUMBERGER. Reproduction, unauthorized use, communication to a third party is liable to prosecution and liable for damages

Reflow gelötet und Sonderlötung
Hierzu Bauteilklebemaske 461 561 07

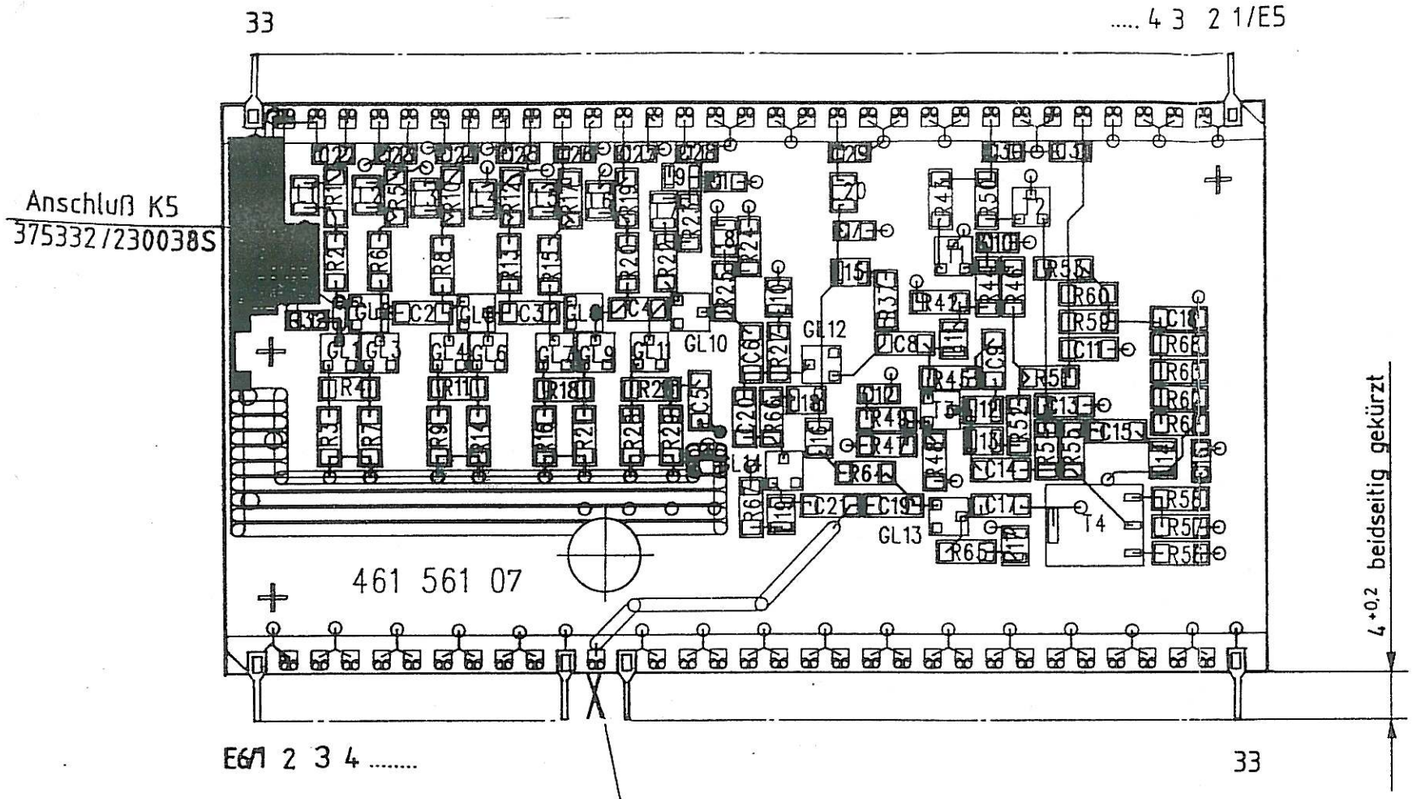

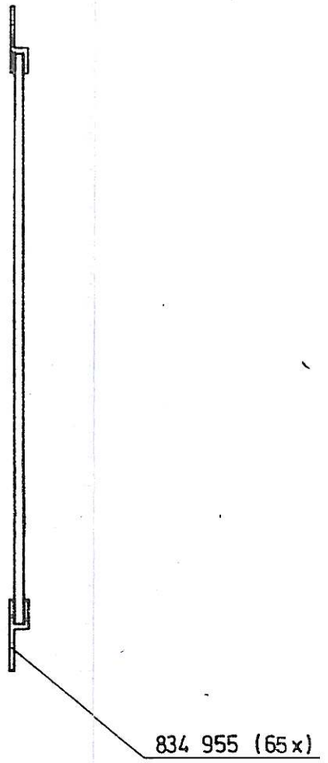

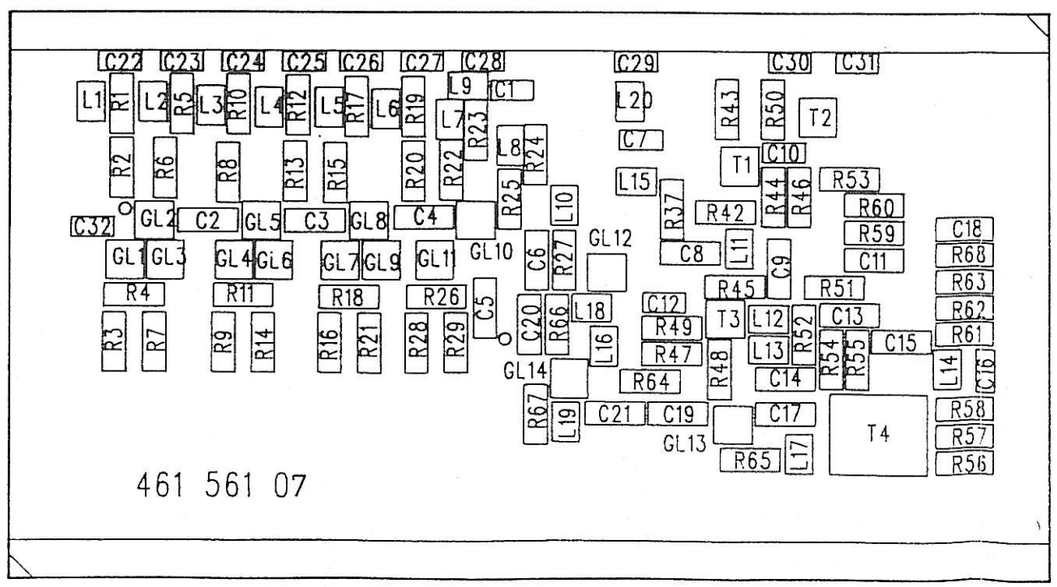

Schaltplanpositionierung = 361 561 S/Sa

Rev No	Rev Sht	Date	Name	
09				
08	3089.5	20.04.93	Va.	
07	2089.28	1.09.92	Unger	
06	2089.26	28.8.92	Ka.	
05	1089.69	11.9.91	Lo.	
04	1089.48	2.7.91	Kr.	
03				
02				
01				
00				

Revisions / Initial part

Werkstoff / Material

Oberfläche / Surface

Freimaßtoleranzen default tolerance

	Date	Name
Drawn	1991 2.7.91	Kr.
Designed		
Checked		

Scale 2:1

DIN A3

Schlumberger Technologies GmbH
Ingolstädter Straße 67 a
8000 München 46

Bezeichnung / Description
Bestückte Leiterplatte
Typ: ATTENUATOR

Zeichnungsnr / Drawing No
361 561

Gerät / Unit: 4015 / 375 332

Diese Zeichnung ist unser Eigentum. Vervielfältigung, unbefugte Verwertung, Mitteilung an andere ist strafbar und schadenersatzpflichtig.
This drawing is the property of SCHLUMBERGER. Reproduction, unauthorized use, communication to a third party is liable to prosecution and liable for damages.

Pos.	Benennung	Wert	HNK-Nr.	Herst.
C1	Kondensator X7R	10nF ±10% 50V-	813332	VIT
C2	Kondensator X7R	100nF ±10% 50V-	813375	VIT
C3	Kondensator X7R	100nF ±10% 50V-	813375	VIT
C4	Kondensator X7R	100nF ±10% 50V-	813375	VIT
C5	Kondensator X7R	100nF ±10% 50V-	813375	VIT
C6	Kondensator X7R	100nF ±10% 50V-	813375	VIT
C7	Kondensator X7R	10nF ±10% 50V-	813332	VIT
C8	Kondensator X7R	100nF ±10% 50V-	813375	VIT
C9	Kondensator X7R	100nF ±10% 50V-	813375	VIT
C10	Kondensator X7R	10nF ±10% 50V-	813332	VIT
C11	Kondensator X7R	100nF ±10% 50V-	813375	VIT
C12	Kondensator NP0	3.3pF ±0.25pF	813217	VIT
C13	Kondensator X7R	100nF ±10% 50V-	813375	VIT
C14	Kondensator X7R	100nF ±10% 50V-	813375	VIT
C15	Kondensator X7R	100nF ±10% 50V-	813375	VIT
C16	Kondensator NP0	1pF ±0.25pF	813211	VIT
C17	Kondensator X7R	100nF ±10% 50V-	813375	VIT
C18	Kondensator X7R	100nF ±10% 50V-	813375	VIT
C19	Kondensator X7R	100nF ±10% 50V-	813375	VIT
C20	Kondensator X7R	100nF ±10% 50V-	813375	VIT
C21	Kondensator X7R	100nF ±10% 50V-	813375	VIT
C22	Kondensator NP0	1nF ±5% 50V-	813247	VIT
C23	Kondensator NP0	1nF ±5% 50V-	813247	VIT
C24	Kondensator NP0	1nF ±5% 50V-	813247	VIT
C25	Kondensator NP0	1nF ±5% 50V-	813247	VIT
C26	Kondensator NP0	1nF ±5% 50V-	813247	VIT
C27	Kondensator NP0	1nF ±5% 50V-	813247	VIT
C28	Kondensator NP0	1nF ±5% 50V-	813247	VIT
C29	Kondensator NP0	1nF ±5% 50V-	813247	VIT

Schlumberger Technologies GmbH				Schaltteilliste	Anz. d. Seiten
06 Index	4089.3 Ä.Nr.	15.3.1994 Datum	Bau Name	Bestückte Leiterplatte Typ: ATTENUATOR	5
Erst.: VARGA		Gepr.:		361 561 Sa	Seite Nr
Gerät: 4015 / 230 038					1

Pos.	Benennung	Wert	HNK-Nr.	Herst.
C30	Kondensator NP0	1nF ±5% 50V-	813247	VIT
C31	Kondensator NP0	1nF ±5% 50V-	813247	VIT
C32	Kondensator NP0	1pF ±0.25pF	813211	VIT
GL1	PIN-Diode	BAR17	830534	SIE
GL2	PIN-Diode	BAR17	830534	SIE
GL3	PIN-Diode	BAR17	830534	SIE
GL4	PIN-Diode	BAR17	830534	SIE
GL5	PIN-Diode	BAR17	830534	SIE
GL6	PIN-Diode	BAR17	830534	SIE
GL7	PIN-Diode	BAR17	830534	SIE
GL8	PIN-Diode	BAR17	830534	SIE
GL9	PIN-Diode	BAR17	830534	SIE
GL10	PIN-Diode	BAR17	830534	SIE
GL11	PIN-Diode	BAR17	830534	SIE
GL12	PIN-Diode	BAR17	830534	SIE
GL13	PIN-Diode	BAR17	830534	SIE
GL14	PIN-Diode	BAR17	830534	SIE
L1	Keramik-Spule	1µH ±5%	821227	STET
L2	Keramik-Spule	1µH ±5%	821227	STET
L3	Keramik-Spule	1µH ±5%	821227	STET
L4	Keramik-Spule	1µH ±5%	821227	STET
L5	Keramik-Spule	1µH ±5%	821227	STET
L6	Keramik-Spule	1µH ±5%	821227	STET
L7	Keramik-Spule	1µH ±5%	821227	STET
L8	Keramik-Spule	1µH ±5%	821227	STET
L9	Keramik-Spule	10µH ±10%	821239	STET
L10	Keramik-Spule	1µH ±5%	821227	STET

Pos.	Benennung	Wert	HNK-Nr.	Herst.
L11	Keramik-Spule	1µH ±5%	821227	STET
L12	Keramik-Spule	22nH ±20%	821208	STET
L13	Keramik-Spule	1µH ±5%	821227	STET
L14	Keramik-Spule	10nH ±20%	821207	STET
L15	Keramik-Spule	1µH ±5%	821227	STET
L16	Keramik-Spule	1µH ±5%	821227	STET
L17	Keramik-Spule	1µH ±5%	821227	STET
L18	Keramik-Spule	1µH ±5%	821227	STET
L19	Keramik-Spule	1µH ±5%	821227	STET
L20	Keramik-Spule	10µH ±10%	821239	STET
R1	Chip-Widerstand	470Ω ±1%	804733	VAL
R2	Chip-Widerstand	560Ω ±1%	804734	VAL
R3	Chip-Widerstand	56Ω ±5%	804722	VAL
R4	Chip-Widerstand	220Ω ±1%	804729	VAL
R5	Chip-Widerstand	470Ω ±1%	804733	VAL
R6	Chip-Widerstand	560Ω ±1%	804734	VAL
R7	Chip-Widerstand	56Ω ±5%	804722	VAL
R8	Chip-Widerstand	560Ω ±1%	804734	VAL
R9	Chip-Widerstand	100Ω ±1%	804725	VAL
R10	Chip-Widerstand	470Ω ±1%	804733	VAL
R11	Chip-Widerstand	68Ω ±5%	804723	VAL
R12	Chip-Widerstand	470Ω ±1%	804733	VAL
R13	Chip-Widerstand	560Ω ±1%	804734	VAL
R14	Chip-Widerstand	100Ω ±1%	804725	VAL
R15	Chip-Widerstand	560Ω ±1%	804734	VAL
R16	Chip-Widerstand	56Ω ±5%	804722	VAL
R17	Chip-Widerstand	470Ω ±1%	804733	VAL
R18	Chip-Widerstand	220Ω ±1%	804729	VAL

Schlumberger Technologies GmbH				Schaltteilliste	Anz. d. Seiten
06 Index	4089.3 Ä.Nr.	15.3.1994 Datum	Bau Name	Bestückte Leiterplatte Typ: ATTENUATOR	5
Erst.: VARGA		Gepr.:		361 561 Sa	Seite Nr
Gerät: 4015 / 230 038					3

Pos.	Benennung	Wert	HNK-Nr.	Herst.
R19	Chip-Widerstand	470Ω ±1%	804733	VAL
R20	Chip-Widerstand	560Ω ±1%	804734	VAL
R21	Chip-Widerstand	56Ω ±5%	804722	VAL
R22	Chip-Widerstand	560Ω ±1%	804734	VAL
R23	Chip-Widerstand	470Ω ±1%	804733	VAL
R24	Chip-Widerstand	470Ω ±1%	804733	VAL
R25	Chip-Widerstand	560Ω ±1%	804734	VAL
R26	Chip-Widerstand	56Ω ±5%	804722	VAL
R27	Chip-Widerstand	680Ω ±1%	804735	VAL
R28	Chip-Widerstand	120Ω ±1%	804726	VAL
R29	Chip-Widerstand	120Ω ±1%	804726	VAL
R37	Chip-Widerstand	680Ω ±1%	804735	VAL
R42	Chip-Widerstand	1.5kΩ ±1%	804739	VAL
R43	Chip-Widerstand	4.7kΩ ±1%	804745	VAL
R44	Chip-Widerstand	4.7kΩ ±1%	804745	VAL
R45	Chip-Widerstand	180Ω ±1%	804728	VAL
R46	Chip-Widerstand	3.9kΩ ±1%	804744	VAL
R47	Chip-Widerstand	22Ω ±5%	804717	VAL
R48	Chip-Widerstand	22Ω ±5%	804717	VAL
R49	Chip-Widerstand	3.3Ω ±5%	804707	VAL
R50	Chip-Widerstand	4.7kΩ ±1%	804745	VAL
R51	Chip-Widerstand	150Ω ±1%	804727	VAL
R52	Chip-Widerstand	100Ω ±1%	804725	VAL
R53	Chip-Widerstand	8.2kΩ ±1%	804748	VAL
R54	Chip-Widerstand	8.2kΩ ±1%	804748	VAL
R55	Chip-Widerstand	150Ω ±1%	804727	VAL
R56	Chip-Widerstand	18Ω ±5%	804716	VAL
R57	Chip-Widerstand	18Ω ±5%	804716	VAL
R58	Chip-Widerstand	3.3Ω ±5%	804707	VAL

Schlumberger Technologies GmbH				Schaltteilliste	Anz. d. Seiten
06 Index	4089.3 Ä.Nr.	15.3.1994 Datum	Bau Name	Bestückte Leiterplatte Typ: ATTENUATOR	5
Erst.: VARGA		Gepr.:		361 561 Sa	Seite Nr
Gerät: 4015 / 230 038					4

Pos.	Benennung	Wert	HNK-Nr.	Herst.
R59	Chip-Widerstand	47Ω ±5%	804721	VAL
R60	Chip-Widerstand	47Ω ±5%	804721	VAL
R61	Chip-Widerstand	180Ω ±1%	804728	VAL
R62	Chip-Widerstand	180Ω ±1%	804728	VAL
R63	Chip-Widerstand	180Ω ±1%	804728	VAL
R64	Chip-Widerstand	680Ω ±1%	804735	VAL
R65	Chip-Widerstand	680Ω ±1%	804735	VAL
R66	Chip-Widerstand	680Ω ±1%	804735	VAL
R67	Chip-Widerstand	680Ω ±1%	804735	VAL
R68	Chip-Widerstand	180Ω ±1%	804728	VAL
T1	NPN Transistor	BC850B	832284	SIE
T2	NPN Transistor	BC850B	832284	SIE
T3	NPN Transistor	BFR93A	832287	VAL
T4	NPN Transistor	BFG97	832296	VAL

Schlumberger Technologies GmbH				Schaltteilliste	Anz. d. Seiten
06 Index	4089.3 Ä.Nr.	15.3.1994 Datum	Bau Name	Bestückte Leiterplatte Typ: ATTENUATOR	5
Erst.: VARGA		Gepr.:		361 561 Sa	Seite Nr
Gerät: 4015 / 230 038					5

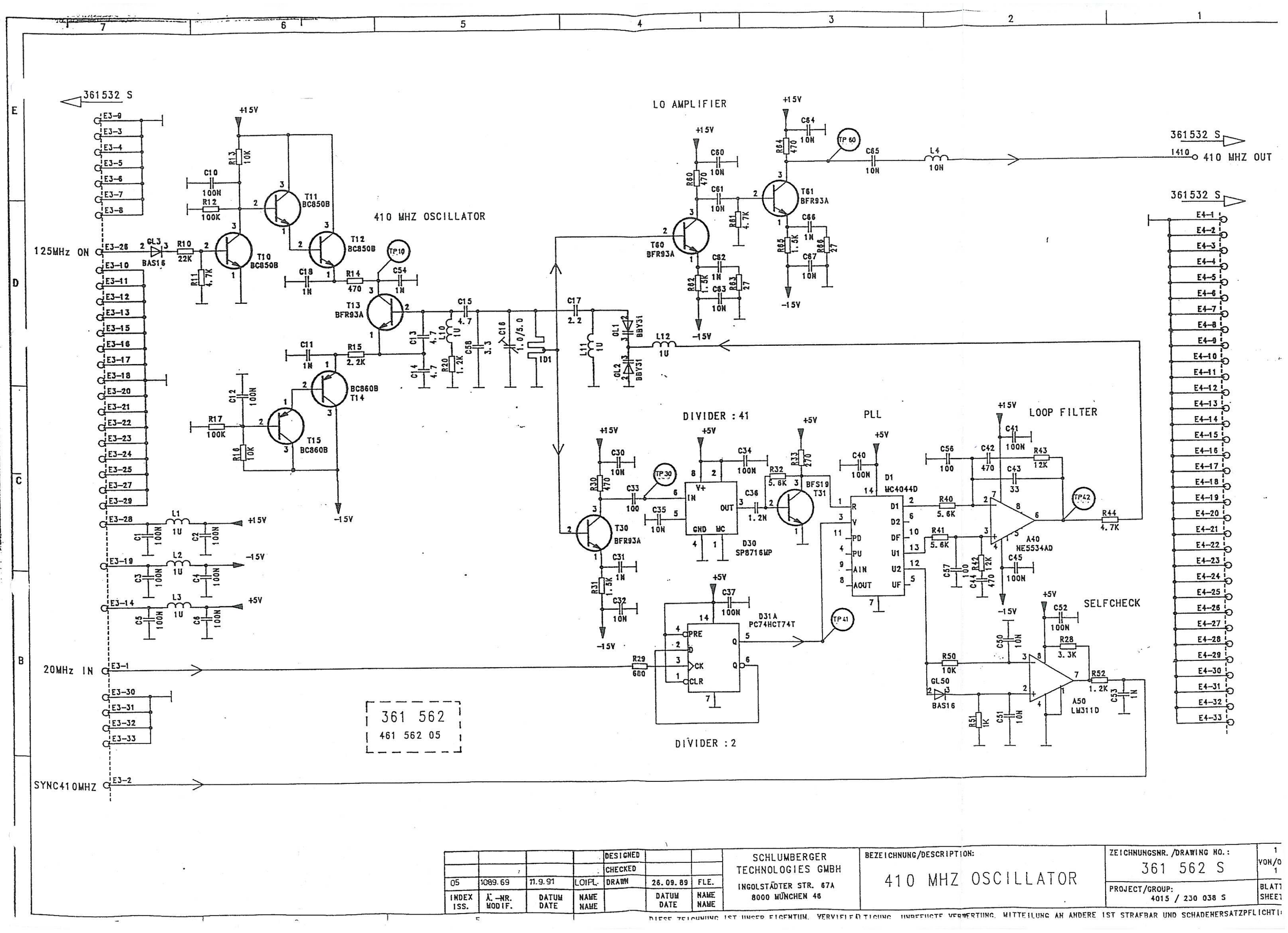

				DESIGNED		
				CHECKED		
05	1089.69	11.9.91	LOIPL.	DRAWN	26.09.89	FLE.
INDEX ISS.	Ä.-NR. MODIF.	DATUM DATE	NAME NAME		DATUM DATE	NAME NAME

SCHLUMBERGER TECHNOLOGIES GMBH
INGOLSTÄDTER STR. 67A
8000 MÜNCHEN 46

BEZEICHNUNG/DESCRIPTION:
410 MHZ OSCILLATOR

ZEICHNUNGSNR. /DRAWING NO.: 361 562 S
PROJECT/GROUP: 4015 / 230 038 S
1 VON/O 1
BLATT SHEET

DIESE ZEICHNUNG IST UNSER EIGENTUM. VERVIELFÄLTIGUNG, UNBEFUGTE VERWERTUNG, MITTEILUNG AN ANDERE IST STRAFBAR UND SCHADENERSATZPFLICHTI

Reflow gelötet

Hierzu Bauteilklebemaske 461 562 05

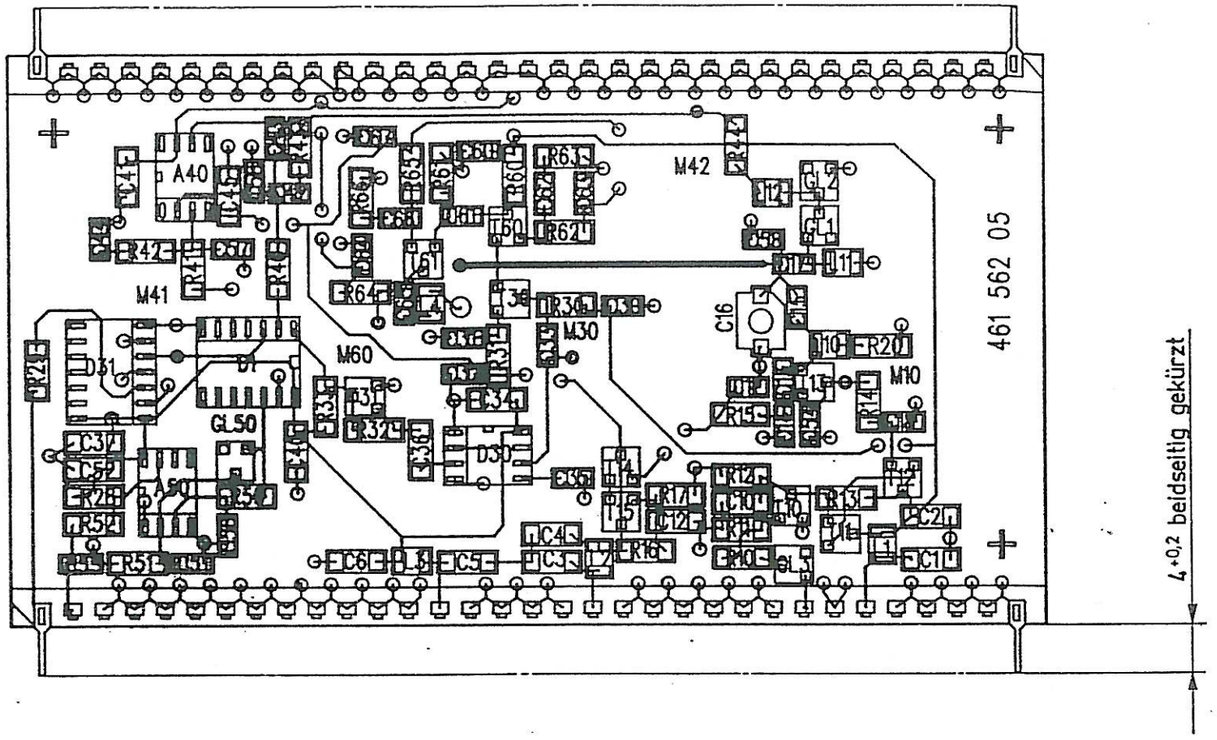

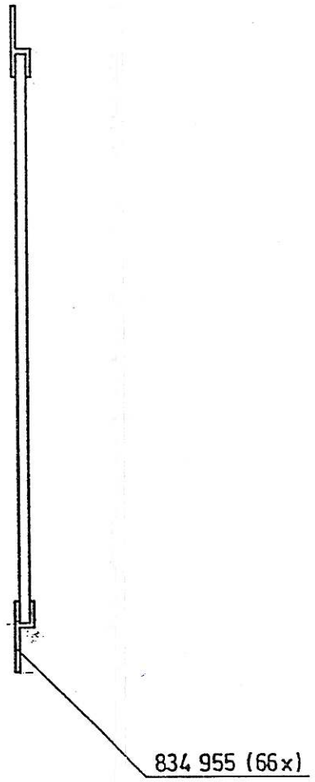

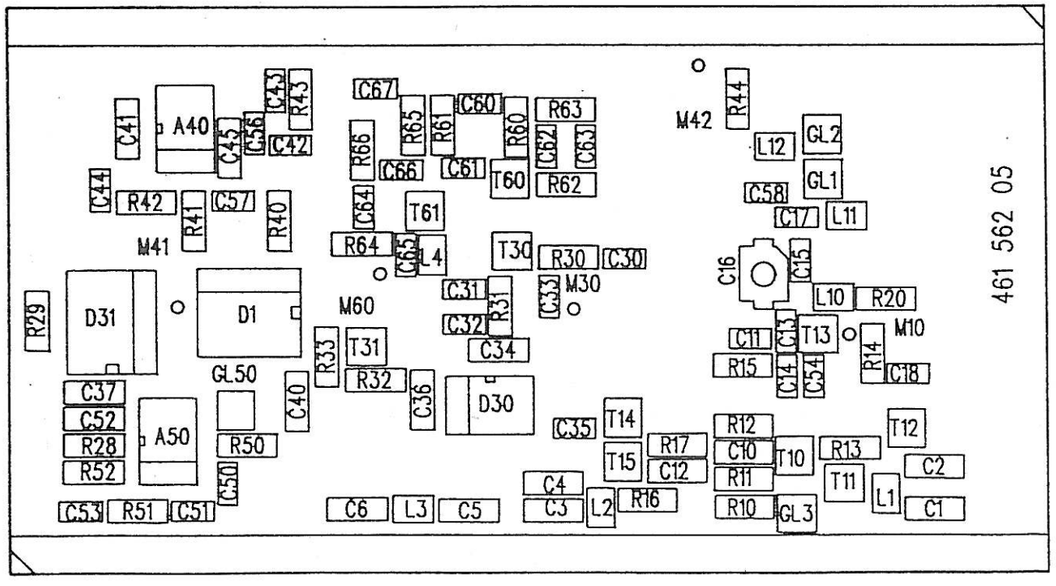

Schaltplanpositionierung = 361 562 S/Sa

Rev. No.	Rev. Sht.	Date	Name
09			
08			
07			
06			
05			
04			
03	1089,49	4.7.91	Kr.
02			
01			
00			

Rohteil: / Initial part:

Werkstoff / Material:

Oberfläche / Surface:

Freimaßtoleranzen / default tolerance:

	Date	Name
1991		
Drawn	4.7.91	Kr.
Designed	8.7.91	
Checked		

Scale: 2:1

DIN A3

Schlumberger Technologies GmbH
Ingolstädter Straße 67 a
8000 München 46

Bezeichnung: / Description:
Bestückte Leiterplatte
Typ: 410 MHz OSC

Zeichnungsnr.: / Drawing No.: 361 562

Gerät: / Unit: 4015 / 375 332

Diese Zeichnung ist unser Eigentum. Vervielfältigung, unbefugte Verwertung, Mitteilung an andere ist strafbar und schadenersatzpflichtig.

This drawing is the property of SCHLUMBERGER. Reproduction, unauthorized use, communication to a third party is liable to prosecution and liable for damages.

Pos.	Benennung	Wert	HNK-Nr.	Herst.
A40	OPV	NE5534AD	834209	VAL
A50	Komparator	LM311D	834213	VAL
C1	Kondensator X7R	100nF ±10% 50V-	813375	VIT
C2	Kondensator X7R	100nF ±10% 50V-	813375	VIT
C3	Kondensator X7R	100nF ±10% 50V-	813375	VIT
C4	Kondensator X7R	100nF ±10% 50V-	813375	VIT
C5	Kondensator X7R	100nF ±10% 50V-	813375	VIT
C6	Kondensator X7R	100nF ±10% 50V-	813375	VIT
C10	Kondensator X7R	100nF ±10% 50V-	813375	VIT
C11	Kondensator NP0	1nF ±5% 50V-	813247	VIT
C12	Kondensator X7R	100nF ±10% 50V-	813375	VIT
C13	Kondensator NP0	4.7pF ±0.25pF	813219	VIT
C14	Kondensator NP0	4.7pF ±0.25pF	813219	VIT
C15	Kondensator NP0	4.7pF ±0.25pF	813219	VIT
C16	Trimm-Kondensator	1.0/5.0pF	817156	TEKE
C17	Kondensator NP0	2.2pF ±0.25pF	813215	VIT
C18	Kondensator NP0	1nF ±5% 50V-	813247	VIT
C30	Kondensator X7R	10nF ±10% 50V-	813332	VIT
C31	Kondensator NP0	1nF ±5% 50V-	813247	VIT
C32	Kondensator X7R	10nF ±10% 50V-	813332	VIT
C33	Kondensator NP0	100pF ±5% 50V-	813235	VIT
C34	Kondensator X7R	100nF ±10% 50V-	813375	VIT
C35	Kondensator X7R	10nF ±10% 50V-	813332	VIT
C36	Kondensator NP0	1.2nF ±5% 50V-	813248	VIT
C37	Kondensator X7R	100nF ±10% 50V-	813375	VIT
C40	Kondensator X7R	100nF ±10% 50V-	813375	VIT
C41	Kondensator X7R	100nF ±10% 50V-	813375	VIT
C42	Kondensator NP0	470pF ±5% 50V-	813243	VIT

Schlumberger Technologies GmbH				Schaltteilliste	Anz. d. Seiten
07 Index	2089.12 Ä.Nr.	26.03.92 Datum	BAU Name	Bestückte Leiterplatte Typ: 410 MHZ OSCILLATOR	4
Erst.: VARGA		Gepr.:		361 562 Sa	Seite Nr
Gerät: 4015 / 230 038					1

Pos.	Benennung	Wert	HNK-Nr.	Herst.
C43	Kondensator NP0	33pF ±5% 50V-	813229	VIT
C44	Kondensator NP0	470pF ±5% 50V-	813243	VIT
C45	Kondensator X7R	100nF ±10% 50V-	813375	VIT
C50	Kondensator X7R	10nF ±10% 50V-	813332	VIT
C51	Kondensator X7R	10nF ±10% 50V-	813332	VIT
C52	Kondensator X7R	100nF ±10% 50V-	813375	VIT
C53	Kondensator NP0	1nF ±5% 50V-	813247	VIT
C54	Kondensator X7R	1nF ±10% 50V-	813320	VIT
C56	Kondensator NP0	100pF ±5% 50V-	813235	VIT
C57	Kondensator NP0	100pF ±5% 50V-	813235	VIT
C58	Kondensator NP0	3.3pF ±0.25pF	813217	VIT
C60	Kondensator X7R	10nF ±10% 50V-	813332	VIT
C61	Kondensator X7R	10nF ±10% 50V-	813332	VIT
C62	Kondensator NP0	1nF ±5% 50V-	813247	VIT
C63	Kondensator X7R	10nF ±10% 50V-	813332	VIT
C64	Kondensator X7R	10nF ±10% 50V-	813332	VIT
C65	Kondensator X7R	10nF ±10% 50V-	813332	VIT
C66	Kondensator NP0	1nF ±5% 50V-	813247	VIT
C67	Kondensator X7R	10nF ±10% 50V-	813332	VIT
D1	Phase-Frequency Detector	MC4044D	835345	MOT
D30	Frequenzteiler	SP8716MP	834447	PLES
D31	Flip-Flop	PC74HCT74T	834433	VAL
GL1	Abstimm-Diode	BBY31	830618	VAL
GL2	Abstimm-Diode	BBY31	830618	VAL
GL3	Diode	BAS16	830552	VAL
GL50	Diode	BAS16	830552	VAL

Schlumberger Technologies GmbH				Schaltteilliste	Anz. d. Seiten
07 Index	2089.12 Ä.Nr.	26.03.92 Datum	BAU Name	Bestückte Leiterplatte Typ: 410 MHZ OSCILLATOR	4
Erst.: VARGA		Gepr.:		361 562 Sa	Seite
Gerät: 4015 / 230 038					2

Pos.	Benennung	Wert	HNK-Nr.	Herst.
L1	Keramik-Spule	1µH ±5%	821227	STET
L2	Keramik-Spule	1µH ±5%	821227	STET
L3	Keramik-Spule	1µH ±5%	821227	STET
L4	Keramik-Spule	10nH ±20%	821207	STET
L10	Keramik-Spule	1µH ±5%	821227	STET
L11	Keramik-Spule	1µH ±5%	821227	STET
L12	Keramik-Spule	1µH ±5%	821227	STET
R10	Chip-Widerstand	22kΩ ±1%	804753	VAL
R11	Chip-Widerstand	4.7kΩ ±1%	804745	VAL
R12	Chip-Widerstand	100kΩ ±1%	804761	VAL
R13	Chip-Widerstand	10kΩ ±1%	804749	VAL
R14	Chip-Widerstand	470Ω ±1%	804733	VAL
R15	Chip-Widerstand	2.2kΩ ±1%	804741	VAL
R16	Chip-Widerstand	10kΩ ±1%	804749	VAL
R17	Chip-Widerstand	100kΩ ±1%	804761	VAL
R20	Chip-Widerstand	1.2kΩ ±1%	804738	VAL
R28	Chip-Widerstand	3.3kΩ ±1%	804743	VAL
R29	Chip-Widerstand	680Ω ±1%	804735	VAL
R30	Chip-Widerstand	470Ω ±1%	804733	VAL
R31	Chip-Widerstand	1.5kΩ ±1%	804739	VAL
R32	Chip-Widerstand	5.6kΩ ±1%	804746	VAL
R33	Chip-Widerstand	270Ω ±1%	804730	VAL
R40	Chip-Widerstand	5.6kΩ ±1%	804746	VAL
R41	Chip-Widerstand	5.6kΩ ±1%	804746	VAL
R42	Chip-Widerstand	12kΩ ±1%	804750	VAL
R43	Chip-Widerstand	12kΩ ±1%	804750	VAL
R44	Chip-Widerstand	4.7kΩ ±1%	804745	VAL
R50	Chip-Widerstand	10kΩ ±1%	804749	VAL

Schlumberger Technologies GmbH				Schaltteilliste	Anz. d. Seiten
07 Index	2089.12 Ä.Nr.	26.03.92 Datum	BAU Name	Bestückte Leiterplatte Typ: 410 MHZ OSCILLATOR	4
Erst.: VARGA		Gepr.:		361 562 Sa	Seite Nr
Gerät: 4015 / 230 038					3

Pos.	Benennung	Wert	HNK-Nr.	Herst.
R51	Chip-Widerstand	1kΩ ±1%	804737	VAL
R52	Chip-Widerstand	1.2kΩ ±1%	804738	VAL
R60	Chip-Widerstand	470Ω ±1%	804733	VAL
R61	Chip-Widerstand	4.7kΩ ±1%	804745	VAL
R62	Chip-Widerstand	1.5kΩ ±1%	804739	VAL
R63	Chip-Widerstand	27Ω ±5%	804718	VAL
R64	Chip-Widerstand	470Ω ±1%	804733	VAL
R65	Chip-Widerstand	1.5kΩ ±1%	804739	VAL
R66	Chip-Widerstand	27Ω ±5%	804718	VAL
T10	NPN Transistor	BC850B	832284	SIE
T11	NPN Transistor	BC850B	832284	SIE
T12	NPN Transistor	BC850B	832284	SIE
T13	NPN Transistor	BFR93A	832287	VAL
T14	PNP Transistor	BC860B	832285	VAL
T15	PNP Transistor	BC860B	832285	VAL
T30	NPN Transistor	BFR93A	832287	VAL
T31	NPN Transistor	BFS19	832286	VAL
T60	NPN Transistor	BFR93A	832287	VAL
T61	NPN Transistor	BFR93A	832287	VAL

Schlumberger Technologies GmbH				Schaltteilliste	Anz. d. Seiten
07 Index	2089.12 Ä.Nr.	26.03.92 Datum	BAU Name	Bestückte Leiterplatte Typ: 410 MHZ OSCILLATOR	4
Erst.: VARGA		Gepr.:		361 562 Sa	Seite
Gerät: 4015 / 230 038					4

361532 S

361 563
461 563 04

C1 10N
D1 SN74LS645DW
20
VCC
E1-1
SPD0 E1-2 2 A1 B1 18 DATA00
SPD1 E1-3 3 A2 B2 17 DATA01
SPD2 E1-4 4 A3 B3 16 DATA02
SPD3 E1-5 5 A4 B4 15 DATA03
SPD4 E1-6 6 A5 B5 14 DATA04
SPD5 E1-7 7 A6 B6 13 DATA05
SPD6 E1-8 8 A7 B7 12 DATA06
SPD7 E1-9 9 A8 B8 11 DATA07
1 DIR
19 ENG
10

DATA[00:07]

E1-10
E1-11
E1-13
E1-14
E1-15
E1-16
E1-17
E1-18
E1-19
E1-20
E1-21
E1-29
E1-30
E1-31
E1-32
E1-33

CTRL[0:7]
CTRL3

C2 10N
D2 N82C55A-2
29
VCC
DATA00 38 D0 PA0 5 A-BUS00
DATA01 37 D1 PA1 4 A-BUS01
DATA02 36 D2 PA2 3 A-BUS02
DATA03 35 D3 PA3 2 A-BUS03
DATA04 33 D4 PA4 44 A-BUS04
DATA05 32 D5 PA5 43 A-BUS05
DATA06 31 D6 PA6 42 A-BUS06
DATA07 30 D7 PA7 41 A-BUS07
PB0 20 A-BUS08
PB1 21 A-BUS09
PB2 22 A-BUS10
PB3 24 A-BUS11
PB4 25 A-BUS12
PB5 26
PB6 27
PB7 28
A-BUS[00:12]
PC0 16 20DB-1ON EBUS00
PC1 17 10DB-2ON EBUS01
PC2 18 20DB-3ON EBUS02
PC3 19 RX/RFON EBUS03
PC4 15 125MHZON EBUS04
PC5 14 LOON EBUS05
PC6 13 RXAMPLON EBUS06
PC7 11 17/37DBON EBUS07
RESET
GND 8

C5 10N
C6 100N
D5 AT28C64-25JC
32
VCC
A12 A11 A10 A9 A8 A7 A6 A5 A4 A3 A2 A1 A0
CE 23
OE 25
WE 31
GND 16
107 22 DATA07
106 21 DATA06
105 20 DATA05
104 19 DATA04
103 18 DATA03
102 15 DATA02
101 14 DATA01
100 13 DATA00

C4 10N
P1 PAL16L8BCNL
20
VCC
SPCS0 E1-26 CSEEPROM 1 CS0 EPRM 19 CTRL4
SPCS1 E1-27 CSD2 2 CS1 CSD2 18 CTRL5
SPCS2 E1-28 CSD6 3 CS2 CSD6 17 CTRL6
SPA0 E1-22 INTEL-A0 4 PA0 A0 16 CTRL0
SPA1 E1-23 INTEL-A1 5 PA1 A1 15 CTRL1
SPA2 E1-24 INTEL-/WR 6 PA2 /WR 14 CTRL2
SPA3 E1-25 INTEL-/RD 7 PA3 /RD 13 CTRL3
INTELRES E1-12 RESET IST AKTIV HIGH 8 IRES RES 12 CTRL7
VCC 9 XINS EWR 11 EWR
GND
10

CTRL0 10 A0
CTRL1 9 A1
CTRL6 7 CS
CTRL3 6 RD
CTRL2 40 WR
CTRL7 39 RESET
GND 8

CTRL4 CTRL4 CTRL5 CTRL6
R1 10K R2 10K R3 10K
VCC

CTRL[0:7] CTRL[0:7]

C7 10N
D6 N82C55A-2
29
VCC
DATA00 38 D0 PA0 5 CALGENON EBUS08
DATA01 37 D1 PA1 4 COUNTF>ON EBUS09
DATA02 36 D2 PA2 3 >0DBM EBUS10
DATA03 35 D3 PA3 2 TXAMPON EBUS11
DATA04 33 D4 PA4 44 DUPLON EBUS12
DATA05 32 D5 PA5 43 COUNTON EBUS13
DATA06 31 D6 PA6 42
DATA07 30 D7 PA7 41 TXON EBUS15
PB0 20
PB1 21
PB2 22
PB3 24
PB4 25
PB5 26
PB6 27
PB7 28
PC0 16 PWRTMP EBUS28
PC1 17
PC2 18
PC3 19
PC4 15 UHFSC EBUS29
PC5 14 DUPLSC EBUS30
PC6 13
PC7 11 SYNC410MHZ EBUS31
CTRL0 10 A0
CTRL1 9 A1
CTRL5 7 CS
CTRL3 6 RD
CTRL2 40 WR
CTRL7 39 RESET
GND 8

R4 10
R5 10
R6 10
VCC

EBUS[00:31]

361532 S
VCC
E2-9
EBUS03 R7 1K E2-3 RX/RFON
EBUS02 R8 1K E2-4 20DB-3ON
EBUS01 R9 1K E2-5 10DB-2ON
EBUS00 R10 1K E2-6 20DB-1ON
EBUS04 R11 1K E2-7 125MHZON
EBUS05 R12 1K E2-8 LOON
EBUS06 R13 1K E2-10 RXAMPLON
EBUS07 R14 1K E2-11 17/37DBON
EBUS29 R15 1K E2-12 UHFSC
EBUS30 R16 1K E2-13 DUPLSC
EBUS31 R17 1K E2-14 SYNC410MHZ
EBUS11 R18 1K E2-19 TXAMPON
EBUS08 R19 1K E2-22 CALGENON
EBUS09 R20 1K E2-23 COUNTF>ON
EBUS10 R21 1K E2-24 >0DBM
EBUS12 R22 1K E2-26 DUPLON
EBUS13 R23 1K E2-27 COUNTON
EBUS15 R25 1K E2-32 TXON
EBUS28 R26 1K E2-33 PWRTMP
E2-28
E2-1
E2-15
E2-16
E2-17
E2-18
E2-2
E2-20
E2-21
E2-25
E2-29
E2-30
E2-31

INDEX ISS.	Ä.-NR. MODIF.	DATUM DATE	NAME NAME		DATUM DATE	NAME NAME
05	1089.50	25.06.91	VARGA	DESIGNED		
04	1089.3	11.01.91	UNGER	CHECKED	24.04.90	VARGA
03	0089.50	08.10.90	VARGA	DRAWN	27.09.89	GRIEB

SCHLUMBERGER TECHNOLOGIES GMBH
INGOLSTÄDTER STR. 67A
8000 MÜNCHEN 46

BEZEICHNUNG/DESCRIPTION:
RF CONTROL

ZEICHNUNGSNR./DRAWING NO.: 361 563 S
PROJECT/GROUP: 4015 / 230 038 S
1 VON/OF 1
BLATT SHEET

This drawing is the property of SCHLUMBERGER. Reproduction, unauthorized, use, communikation to a third party is liable to prosecution and liable for damages.

Reflow gelötet
Hierzu Bauteilklebemaske 461 563 04

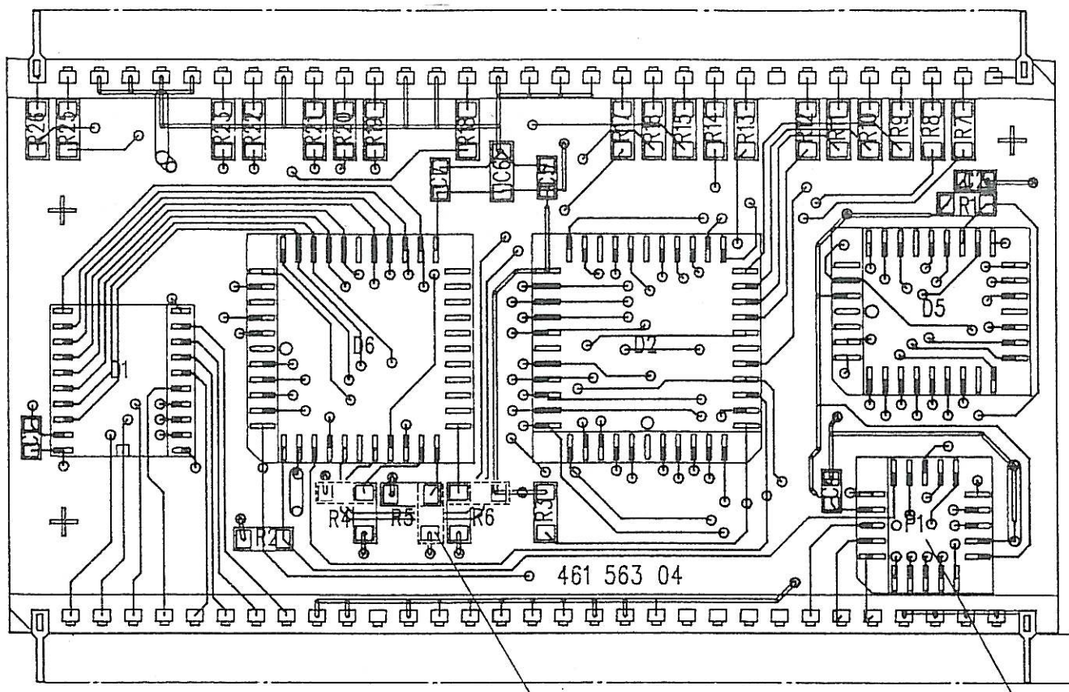

4 +0.2 beidseitig gekürzt

Special Code (R4, R5, R6)

P1 ohne Sockel montiert
(Bauhöhe !)

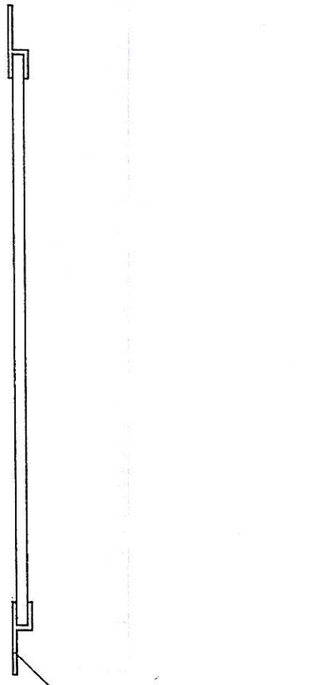

834 955 (66x)

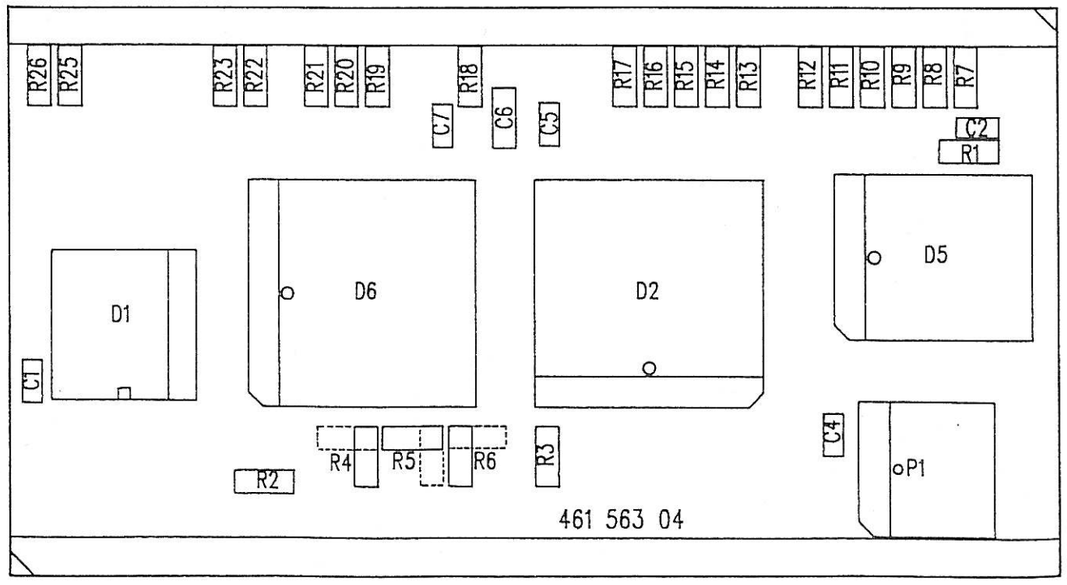

Schaltplanpositionierung = 361 563 S/Sa

Rev. No.	Rev. Sht.	Date	Name
09			
08			
07			
06			
05			
04	1089.84	18.12.91	Kr.
03	1089.50	3.7.91	Kr.
02			
01			
00			

Rohteil: / Initial part:

Werkstoff / Material:

Oberfläche / Surface:

Freimaß-toleranzen. / default tolerance:

Scale: 2:1

DIN A3

	Date	Name
1991		
Drawn	3.7.91	Kr.
Designed	4.7.91	
Checked		

Schlumberger Technologies GmbH
Ingolstädter Straße 67 a
8000 München 46

Bezeichnung: / Description:
Bestückte Leiterplatte
Typ : RF-CONTROL

Zeichnungsnr.: / Drawing No.: 361 563

Gerät: / Unit: 4015 / 375 332

Diese Zeichnung ist unser Eigentum. Vervielfältigung, unberugte Verwertung, Mitteilung an andere ist strafbar und schadenersatzpflichtig.

This drawing is the property of SCHLUMBERGER. Reproduction, unauthorized use, communication to a third party is liable to prosecution and liable for damages.

Pos.	Benennung	Wert	HNK-Nr.	Herst.
C1	Kondensator X7R	10nF ±10% 50V-	813332	VIT
C2	Kondensator X7R	10nF ±10% 50V-	813332	VIT
C4	Kondensator X7R	10nF ±10% 50V-	813332	VIT
C5	Kondensator X7R	10nF ±10% 50V-	813332	VIT
C6	Kondensator X7R	100nF ±10% 50V-	813375	VIT
C7	Kondensator X7R	10nF ±10% 50V-	813332	VIT
D1	Bidir. Bustreiber	SN74LS645DW	835323	TI
D2	PPI	N82C55A-2	834870	INTEL
D5	8K x 8 EEPROM	AT28C64-25JC	834820	XICOR
D6	PPI	N82C55A-2	834870	INTEL
P1	PAL	PAL16L8BNLC	893396	SCHL
R1	Chip-Widerstand	10kΩ ±1%	804749	VAL
R2	Chip-Widerstand	10kΩ ±1%	804749	VAL
R3	Chip-Widerstand	10kΩ ±1%	804749	VAL
R4	Chip-Widerstand	10Ω ±5%	804713	VAL
R5	Chip-Widerstand	10Ω ±5%	804713	VAL
R6	Chip-Widerstand	10Ω ±5%	804713	VAL
R7	Chip-Widerstand	1kΩ ±1%	804737	VAL
R8	Chip-Widerstand	1kΩ ±1%	804737	VAL
R9	Chip-Widerstand	1kΩ ±1%	804737	VAL
R10	Chip-Widerstand	1kΩ ±1%	804737	VAL
R11	Chip-Widerstand	1kΩ ±1%	804737	VAL
R12	Chip-Widerstand	1kΩ ±1%	804737	VAL
R13	Chip-Widerstand	1kΩ ±1%	804737	VAL
R14	Chip-Widerstand	1kΩ ±1%	804737	VAL
R15	Chip-Widerstand	1kΩ ±1%	804737	VAL

Schlumberger Technologies GmbH				Schaltteilliste	Anz. d. Seiten
06 Index	1089.84 Ä.Nr.	18.12.91 Datum	Kr. Name	Bestückte Leiterplatte Typ: RF CONTROL	2
Erst.: VARGA		Gepr.:		361 563 Sa	Seite Nr
Gerät: 4015 / 375 332					1

Pos.	Benennung	Wert	HNK-Nr.	Herst.
R16	Chip-Widerstand	1kΩ ±1%	804737	VAL
R17	Chip-Widerstand	1kΩ ±1%	804737	VAL
R18	Chip-Widerstand	1kΩ ±1%	804737	VAL
R19	Chip-Widerstand	1kΩ ±1%	804737	VAL
R20	Chip-Widerstand	1kΩ ±1%	804737	VAL
R21	Chip-Widerstand	1kΩ ±1%	804737	VAL
R22	Chip-Widerstand	1kΩ ±1%	804737	VAL
R23	Chip-Widerstand	1kΩ ±1%	804737	VAL
R25	Chip-Widerstand	1kΩ ±1%	804737	VAL
R26	Chip-Widerstand	1kΩ ±1%	804737	VAL

Schlumberger Technologies GmbH				Schaltteilliste	Anz. d. Seiten
06 Index	1089.84 Ä.Nr.	18.12.91 Datum	Kr. Name	Bestückte Leiterplatte Typ: RF CONTROL	2
Erst.: VARGA		Gepr.:		361 563 Sa	Seite Nr
Gerät: 4015 / 375 332					2

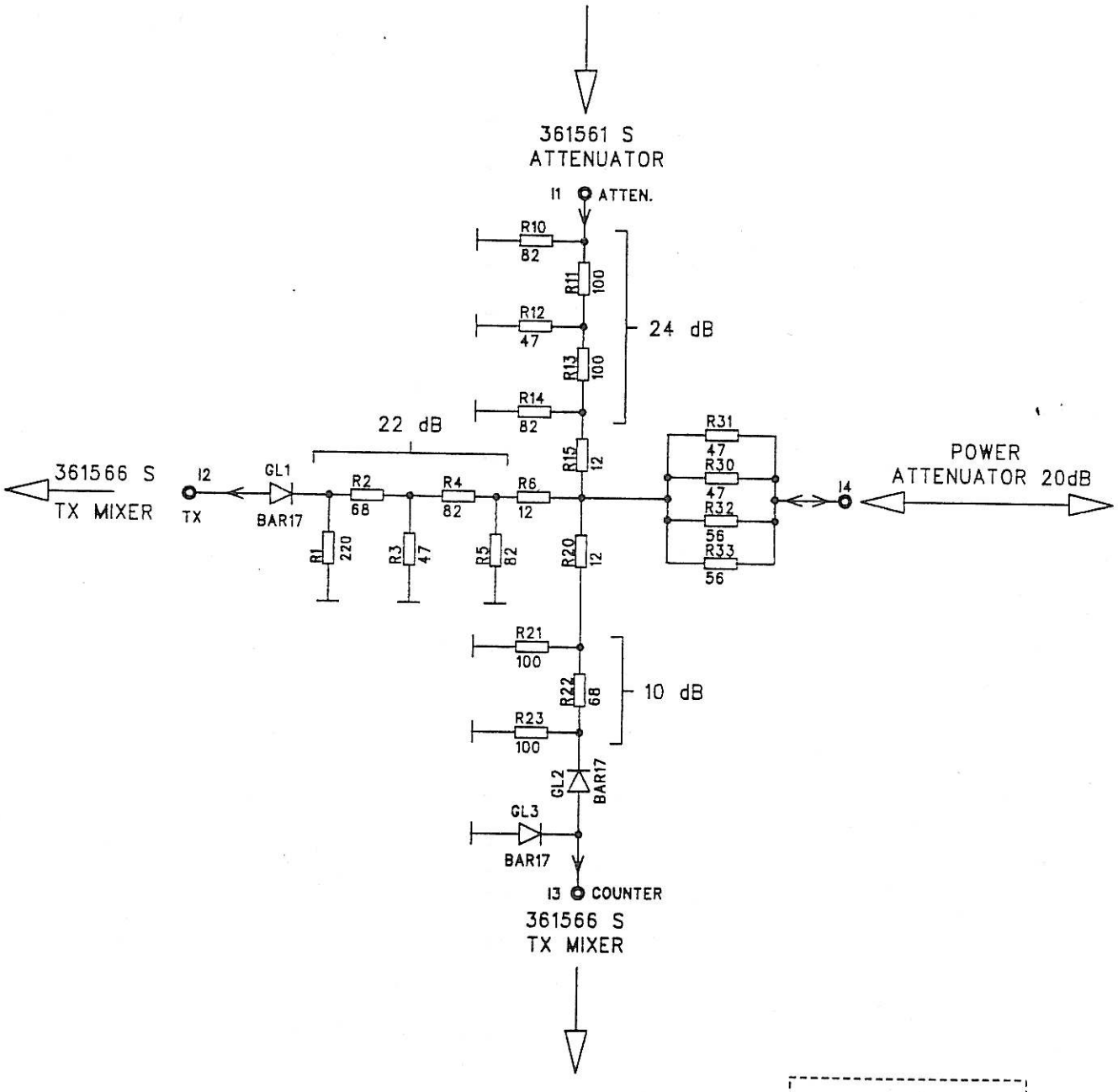

361 564

461 564 04

INDEX ISS.	Ä.-NR. MODIF.	DATUM DATE	NAME NAME		DATUM DATE	NAME NAME
04	4089.3	16.03.94	Bau	DESIGNED		
03	2089.4	13.02.92	Bau	CHECKED		
02	1089.3	14.01.91	UNGER	DRAWN	27.9.89	FLE

SCHLUMBERGER
TECHNOLOGIES GMBH
Gutenbergstr. 2-4
85737 ISMANING

BEZEICHNUNG/DESCRIPTION:

POWER SPLITTER

ZEICHNUNGSNR./DRAWING NO.:

361 564 S

PROJECT/GROUP:
4015 / 230 038 S

Reflow gelötet und Sonderlötung

Hierzu Bauteilklebemaske 461 564 04

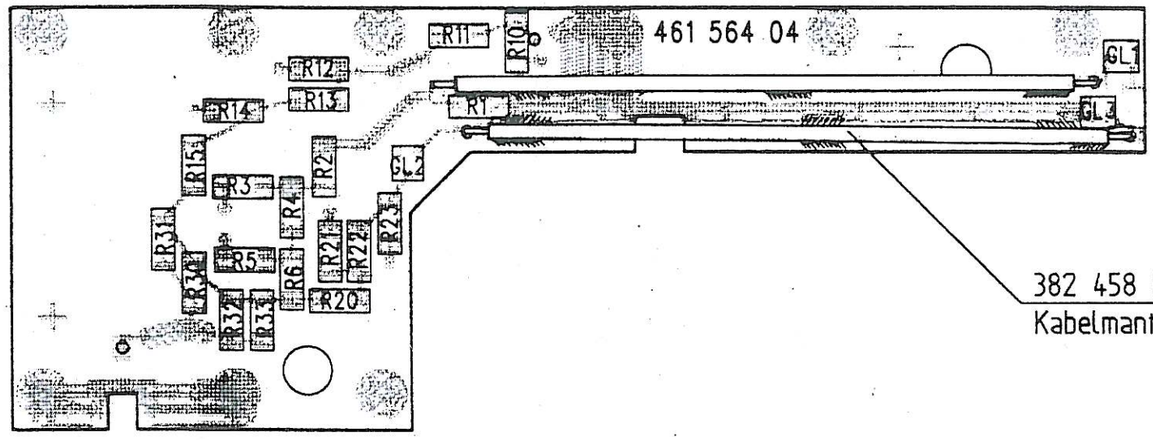

382 458 (2x)

Kabelmantel mit Massefläche verlötet (6x)

= Kontrollmaß / Critical measurements

Schaltplanpositionierung = 361 564 S/Sa

Rev. No.	Rev. Shr.	Date	Name	
09				Rohteil / Initial part:
08				
07				
06				
05	4089.3	17.3.94	Kr.	Werkstoff / Material:
04				
03				
02				
01				Oberfläche / Surface:
00				

Freimaß toleranzen / default tolerance:

1994	Datz	Name
Drawn	17.3.94	Kr.
Designed		
Checked		

Scale: 2:1

DIN A3

Schlumberger Technologies GmbH
Gutenbergstr. 2-4
85737 Ismaning

Bezeichnung: / Description:

Bestückte Leiterplatte

Type: POWER SPLITTER

Zeichnungsnr.: / Drawing No.: 361 564

Gerät: / Unit: 4015 / 300 694

This drawing is the property of SCHLUMBERGER. Reproduction, unauthorized use, communication to a third party is liable to prosecution and liable for damages.

Diese Zeichnung ist unser Eigentum. Vervielfältigung, unbefugte Verwertung, Mitteilung an andere ist strafbar und schadenersatzpflichtig.

Pos.	Benennung	Wert	HNK-Nr.	Herst.
GL1	PIN-Diode	BAR17	830534	SIE
GL2	PIN-Diode	BAR17	830534	SIE
GL3	PIN-Diode	BAR17	830534	SIE
R1	Chip-Widerstand	220Ω ±1%	804729	VAL
R2	Chip-Widerstand	68Ω ±5%	804723	VAL
R3	Chip-Widerstand	47Ω ±5%	804721	VAL
R4	Chip-Widerstand	82Ω ±5%	804724	VAL
R5	Chip-Widerstand	82Ω ±5%	804724	VAL
R6	Chip-Widerstand	12Ω ±5%	804714	VAL
R10	Chip-Widerstand	82Ω ±5%	804724	VAL
R11	Chip-Widerstand	100Ω ±1%	804725	VAL
R12	Chip-Widerstand	47Ω ±5%	804721	VAL
R13	Chip-Widerstand	100Ω ±1%	804725	VAL
R14	Chip-Widerstand	82Ω ±5%	804724	VAL
R15	Chip-Widerstand	12Ω ±5%	804714	VAL
R20	Chip-Widerstand	12Ω ±5%	804714	VAL
R21	Chip-Widerstand	100Ω ±1%	804725	VAL
R22	Chip-Widerstand	68Ω ±5%	804723	VAL
R23	Chip-Widerstand	100Ω ±1%	804725	VAL
R30	Chip-Widerstand	47Ω ±5%	804721	VAL
R31	Chip-Widerstand	47Ω ±5%	804721	VAL
R32	Chip-Widerstand	56Ω ±5%	804722	VAL
R33	Chip-Widerstand	56Ω ±5%	804722	VAL

Schlumberger Technologies GmbH				Schaltteilliste	Anz. d. Seiten
03 Index	4089.3 Ä.Nr.	18.3.1994 Datum	BAU Name	Bestückte Leiterplatte Typ: POWER SPLITTER	1
Erst.: UNGER		Gepr.:		361 564 Sa	Seite Nr
Gerät: 4015 / 230 038 / 300 694					1

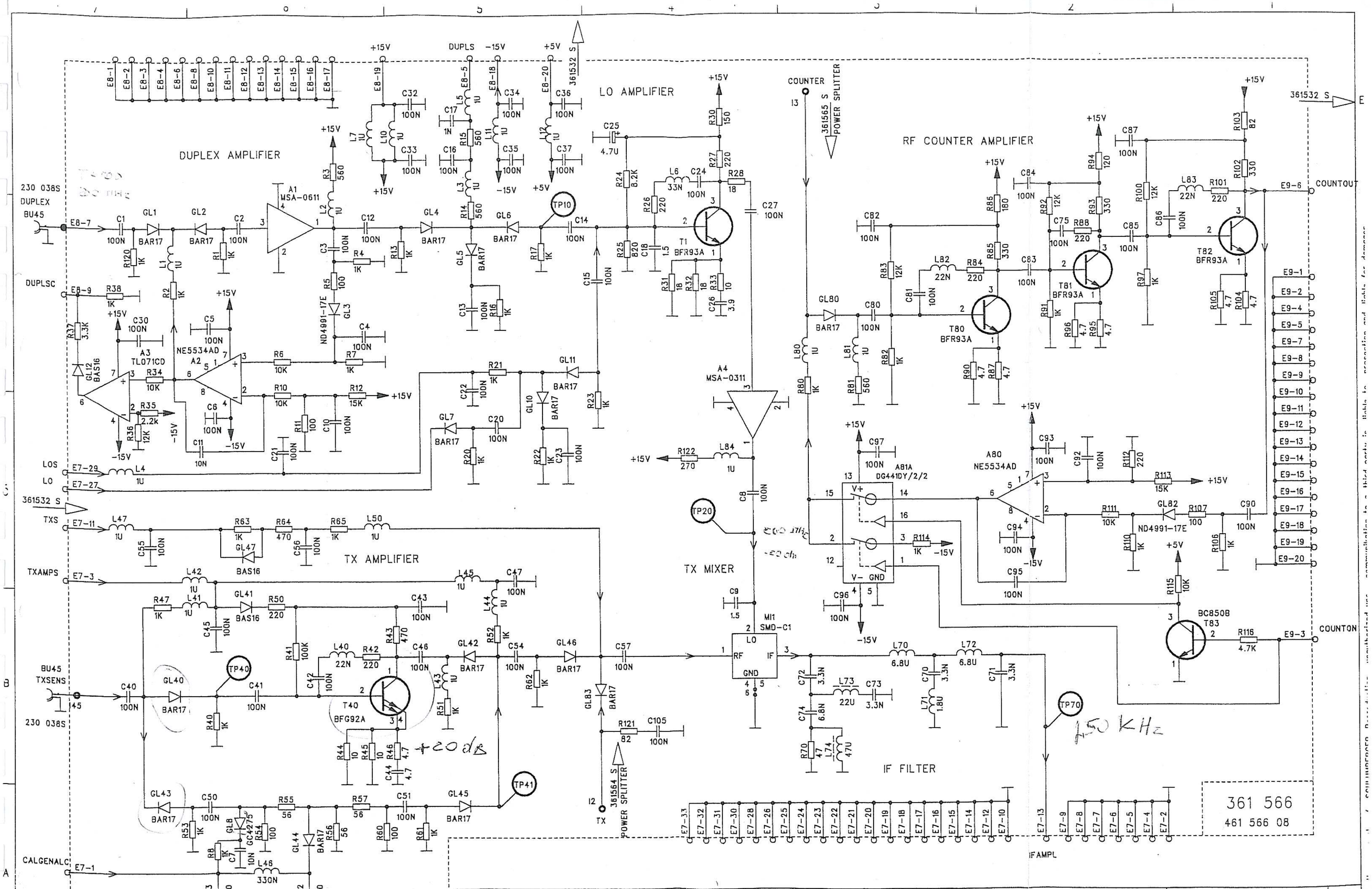

10	4089.3	15.03.94	Bau	DESIGNED	14.06.91	SALZ.	SCHLUMBERGER TECHNOLOGIES GMBH Gutenbergstr. 2-4 85737 ISMANING	BEZEICHNUNG/DESCRIPTION: TX MIXER	ZEICHNUNGSNR./DRAWING NO.: 361 566 S	1 VON/OF 1
09	2089.28	02.09.92	VARGA	CHECKED	18.04.90	VARGA				
08	2089.12	06.04.92	Bau	DRAWN	2.10.89	FLE.			PROJECT/GROUP: 4015 / 230 038 S	BLATT SHEET
INDEX ISS.	Ä.-NR. MODIF.	DATUM DATE	NAME NAME		DATUM DATE	NAME NAME				

DIESE ZEICHNUNG IST UNSER EIGENTUM. VERVIELFÄLTIGUNG, UNBEFUGTE VERWERTUNG, MITTEILUNG AN ANDERE IST STRAFBAR UND SCHADENERSATZPFLICHTIG.

Reflow gelötet
Hierzu Bauteilklebemaske 461 566 08

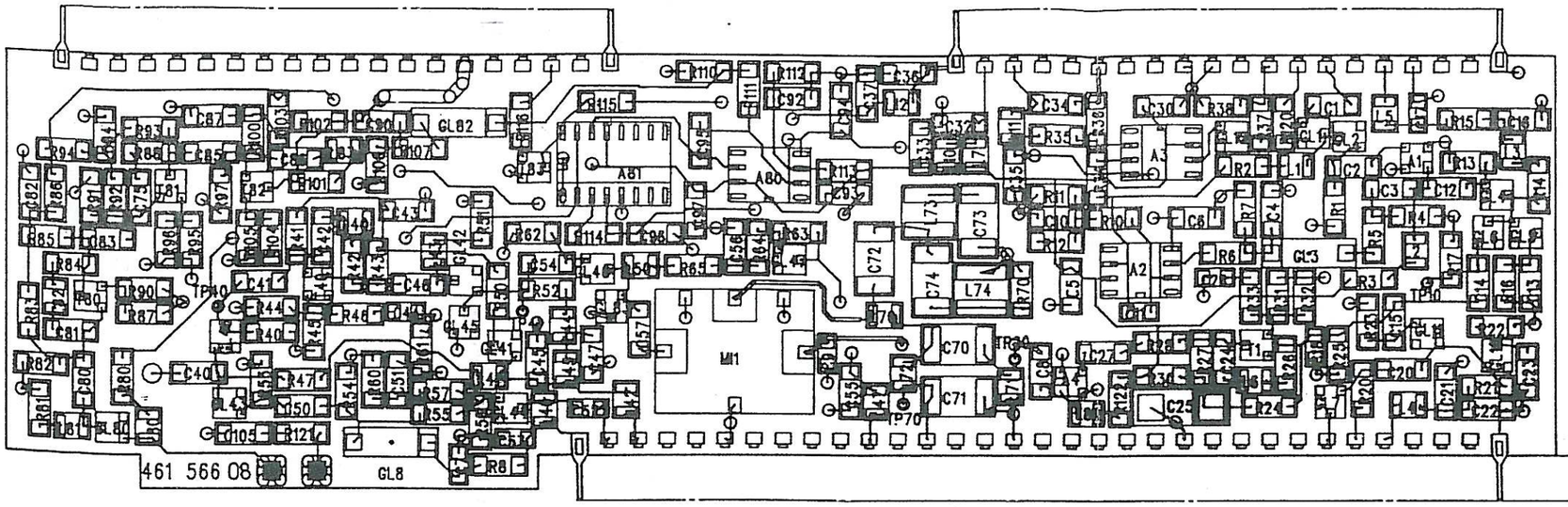

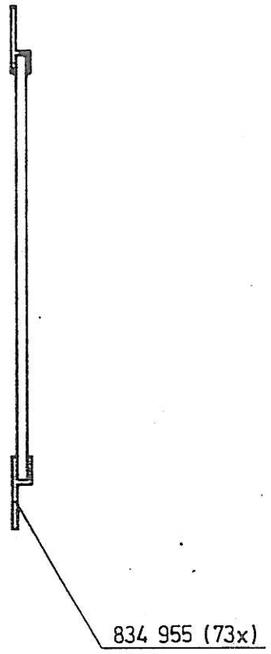

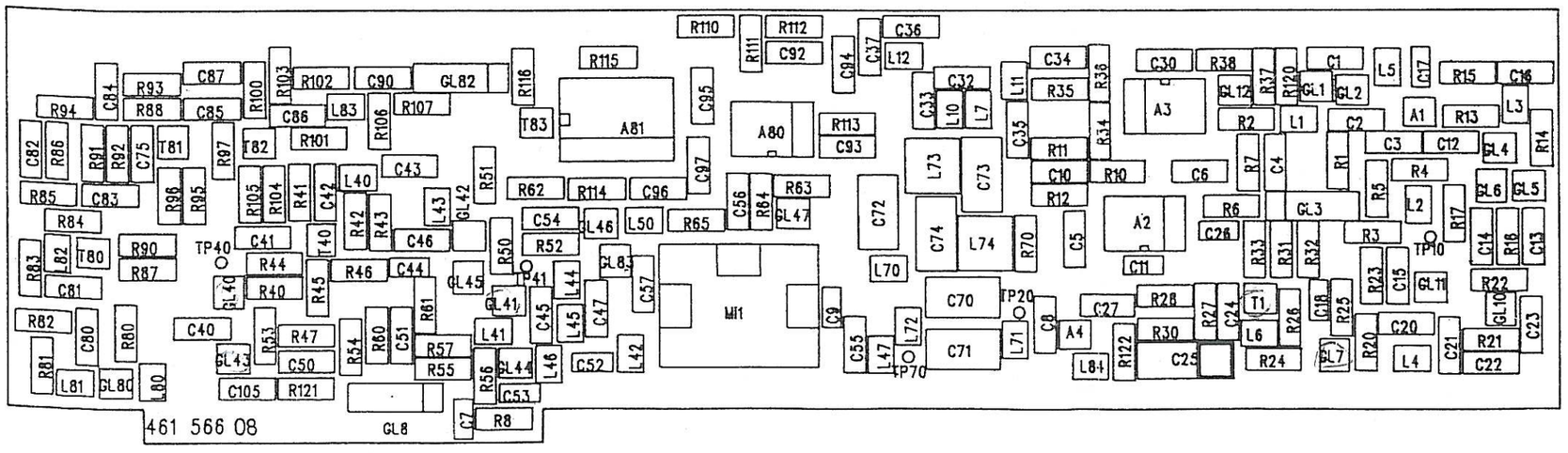

Schaltplanpositionierung = 361 566 S/Sa

Rev No	Rev Stat.	Date	Name
09			
08			
07			
06	2089,12	8.4.92	Kr.
05	2089,7	10.3.92	Wi.
04	1089,84	17.12.91	Kr.
03	1089,52	5.7.91	Kr.
02			
01			
00			

Rohteil / Initial part

Werkstoff / Material

Oberfläche / Surface

Freimaß toleranzen default tolerance

Scale 2:1

DIN A3

	Date	Name
1991	Date	Name
Drawn	5.7.91	Kr.
Designed	8.7.91	
Checked		

Schlumberger Technologies GmbH
Ingolstädter Straße 67 a
8000 München 46

Bezeichnung / Description
Bestückte Leiterplatte
Typ : TX - MIXER

Zeichnungsnr / Drawing No
361 566

Gerät / Unit 4015 / 375 332

Diese Zeichnung ist unser Eigentum. Vervielfältigung, unbefugte Verwertung, Mitteilung an andere ist strafbar und schadenersatzpflichtig

This drawing is the property of SCHLUMBERGER. Reproduction, unauthorized use, communication to a third party is liable to prosecution and liable for damages.

Pos.	Benennung	Wert	HNK-Nr.	Herst.
A1	Verstärker	MSA-0611	835215	AVAN
A2	OPV	NE5534AD	834209	VAL
A3	OPV	TL071CD	834227	TI
A4	Verstärker	MSA-0311	834229	AVAN
A80	OPV	NE5534AD	834209	VAL
A81	Analog Schalter	DG441DY	835336	SILI
C1	Kondensator X7R	100nF ±10% 50V-	813375	VIT
C2	Kondensator X7R	100nF ±10% 50V-	813375	VIT
C3	Kondensator X7R	100nF ±10% 50V-	813375	VIT
C4	Kondensator X7R	100nF ±10% 50V-	813375	VIT
C5	Kondensator X7R	100nF ±10% 50V-	813375	VIT
C6	Kondensator X7R	100nF ±10% 50V-	813375	VIT
C7	Kondensator X7R	10nF ±10% 50V-	813332	VIT
C8	Kondensator X7R	100nF ±10% 50V-	813375	VIT
C9	Kondensator NP0	1.5pF ±0.25pF	813213	VIT
C10	Kondensator X7R	100nF ±10% 50V-	813375	VIT
C11	Kondensator X7R	10nF ±10% 50V-	813332	VIT
C12	Kondensator X7R	100nF ±10% 50V-	813375	VIT
C13	Kondensator X7R	100nF ±10% 50V-	813375	VIT
C14	Kondensator X7R	100nF ±10% 50V-	813375	VIT
C15	Kondensator X7R	100nF ±10% 50V-	813375	VIT
C16	Kondensator X7R	100nF ±10% 50V-	813375	VIT
C17	Kondensator NP0	1nF ±5% 50V-	813247	VIT
C18	Kondensator NP0	1.5pF ±0.25pF	813213	VIT
C20	Kondensator X7R	100nF ±10% 50V-	813375	VIT
C21	Kondensator X7R	100nF ±10% 50V-	813375	VIT
C22	Kondensator X7R	100nF ±10% 50V-	813375	VIT
C23	Kondensator X7R	100nF ±10% 50V-	813375	VIT

Schlumberger Technologies GmbH				Schaltteilliste	Anz. d. Seiten
08 Index	4089.3 Ä.Nr.	15.3.1994 Datum	VARGA Name	Bestückte Leiterplatte Typ: TX-MIXER	9
Erst.: Bau		Gepr.:		361 566 Sa	Seite Nr
Gerät: 4015 / 230 038					1

Pos.	Benennung	Wert	HNK-Nr.	Herst.
C24	Kondensator X7R	100nF ±10% 50V-	813375	VIT
C25	Tantalkondensator	4,7µF ±20% 20V-	814510	NEC
C26	Kondensator NP0	3.9pF ±0.25pF	813218	VIT
C27	Kondensator X7R	100nF ±10% 50V-	813375	VIT
C30	Kondensator X7R	100nF ±10% 50V-	813375	VIT
C32	Kondensator X7R	100nF ±10% 50V-	813375	VIT
C33	Kondensator X7R	100nF ±10% 50V-	813375	VIT
C34	Kondensator X7R	100nF ±10% 50V-	813375	VIT
C35	Kondensator X7R	100nF ±10% 50V-	813375	VIT
C36	Kondensator X7R	100nF ±10% 50V-	813375	VIT
C37	Kondensator X7R	100nF ±10% 50V-	813375	VIT
C40	Kondensator X7R	100nF ±10% 50V-	813375	VIT
C41	Kondensator X7R	100nF ±10% 50V-	813375	VIT
C42	Kondensator X7R	100nF ±10% 50V-	813375	VIT
C43	Kondensator X7R	100nF ±10% 50V-	813375	VIT
C44	Kondensator NP0	4.7pF ±0.25pF	813219	VIT
C45	Kondensator X7R	100nF ±10% 50V-	813375	VIT
C46	Kondensator X7R	100nF ±10% 50V-	813375	VIT
C47	Kondensator X7R	100nF ±10% 50V-	813375	VIT
C50	Kondensator X7R	100nF ±10% 50V-	813375	VIT
C51	Kondensator X7R	100nF ±10% 50V-	813375	VIT
C52	Kondensator NP0	330pF ±5% 50V-	813241	VIT
C53	Kondensator NP0	330pF ±5% 50V-	813241	VIT
C54	Kondensator X7R	100nF ±10% 50V-	813375	VIT
C55	Kondensator X7R	100nF ±10% 50V-	813375	VIT
C56	Kondensator X7R	100nF ±10% 50V-	813375	VIT
C57	Kondensator X7R	100nF ±10% 50V-	813375	VIT
C70	Kondensator NP0	3.3nF ±5% 50V-	813253	VIT
C71	Kondensator NP0	3.3nF ±5% 50V-	813253	VIT

Pos.	Benennung	Wert	HNK-Nr.	Herst.
C72	Kondensator NP0	3.3nF ±5% 50V-	813253	VIT
C73	Kondensator NP0	3.3nF ±5% 50V-	813253	VIT
C74	Kondensator NP0	6.8nF ±5% 50V-	813257	VIT
C75	Kondensator X7R	100nF ±10% 50V-	813375	VIT
C80	Kondensator X7R	100nF ±10% 50V-	813375	VIT
C81	Kondensator X7R	100nF ±10% 50V-	813375	VIT
C82	Kondensator X7R	100nF ±10% 50V-	813375	VIT
C83	Kondensator X7R	100nF ±10% 50V-	813375	VIT
C84	Kondensator X7R	100nF ±10% 50V-	813375	VIT
C85	Kondensator X7R	100nF ±10% 50V-	813375	VIT
C86	Kondensator X7R	100nF ±10% 50V-	813375	VIT
C87	Kondensator X7R	100nF ±10% 50V-	813375	VIT
C90	Kondensator X7R	100nF ±10% 50V-	813375	VIT
C92	Kondensator X7R	100nF ±10% 50V-	813375	VIT
C93	Kondensator X7R	100nF ±10% 50V-	813375	VIT
C94	Kondensator X7R	100nF ±10% 50V-	813375	VIT
C95	Kondensator X7R	100nF ±10% 50V-	813375	VIT
C96	Kondensator X7R	100nF ±10% 50V-	813375	VIT
C97	Kondensator X7R	100nF ±10% 50V-	813375	VIT
C105	Kondensator X7R	100nF ±10% 50V-	813375	VIT
GL1	PIN-Diode	BAR17	830534	SIE
GL2	PIN-Diode	BAR17	830534	SIE
GL3	Schottky-Diode	ND4991-17E	830508	NEC
GL4	PIN-Diode	BAR17	830534	SIE
GL5	PIN-Diode	BAR17	830534	SIE
GL6	PIN-Diode	BAR17	830534	SIE
GL7	PIN-Diode	BAR17	830534	SIE
GL8	PIN-Diode	GC4275	830556	FQS

Pos.	Benennung	Wert	HNK-Nr.	Herst.
GL10	PIN-Diode	BAR17	830534	SIE
GL11	PIN-Diode	BAR17	830534	SIE
GL12	Diode	BAS16	830552	VAL
GL40	PIN-Diode	BAR17	830534	SIE
GL41	Diode	BAS16	830552	VAL
GL42	PIN-Diode	BAR17	830534	SIE
GL43	PIN-Diode	BAR17	830534	SIE
GL44	PIN-Diode	BAR17	830534	SIE
GL45	PIN-Diode	BAR17	830534	SIE
GL46	PIN-Diode	BAR17	830534	SIE
GL47	Diode	BAS16	830552	VAL
GL80	PIN-Diode	BAR17	830534	SIE
GL82	Schottky-Diode	ND4991-17E	830508	NEC
GL83	PIN-Diode	BAR17	830534	SIE
L1	Keramik-Spule	1µH ±5%	821227	STET
L2	Keramik-Spule	1µH ±5%	821227	STET
L3	Keramik-Spule	1µH ±5%	821227	STET
L4	Keramik-Spule	1µH ±5%	821227	STET
L5	Keramik-Spule	1µH ±5%	821227	STET
L6	Keramik-Spule	33nH ±10%	821209	STET
L7	Keramik-Spule	1µH ±5%	821227	STET
L10	Keramik-Spule	1µH ±5%	821227	STET
L11	Keramik-Spule	1µH ±5%	821227	STET
L12	Keramik-Spule	1µH ±5%	821227	STET
L40	Keramik-Spule	22nH ±20%	821208	STET
L41	Keramik-Spule	1µH ±5%	821227	STET
L42	Keramik-Spule	1µH ±5%	821227	STET
L43	Keramik-Spule	1µH ±5%	821227	STET

Pos.	Benennung	Wert	HNK-Nr.	Herst.
L44	Keramik-Spule	1µH ±5%	821227	STET
L45	Keramik-Spule	1µH ±5%	821227	STET
L46	Keramik-Spule	330nH ±5%	821221	STET
L47	Keramik-Spule	1µH ±5%	821227	STET
L50	Keramik-Spule	1µH ±5%	821227	STET
L70	Keramik-Spule	6.8µH ±10%	821237	STET
L71	Keramik-Spule	1.8µH ±10%	821230	STET
L72	Keramik-Spule	6.8µH ±10%	821237	STET
L73	Ferrit-Spule	22µH ±15%	821318	SIE
L74	Ferrit-Spule	47µH ±15%	821320	SIE
L80	Keramik-Spule	1µH ±5%	821227	STET
L81	Keramik-Spule	1µH ±5%	821227	STET
L82	Keramik-Spule	22nH ±20%	821208	STET
L83	Keramik-Spule	22nH ±20%	821208	STET
L84	Keramik-Spule	1µH ±5%	821227	STET
MI1	Mischer	SMD-C1	872081	SYNERGY
R1	Chip-Widerstand	1kΩ ±1%	804737	VAL
R2	Chip-Widerstand	1kΩ ±1%	804737	VAL
R3	Chip-Widerstand	560Ω ±1%	804734	VAL
R4	Chip-Widerstand	1kΩ ±1%	804737	VAL
R5	Chip-Widerstand	100Ω ±1%	804725	VAL
R6	Chip-Widerstand	10kΩ ±1%	804749	VAL
R7	Chip-Widerstand	1kΩ ±1%	804737	VAL
R8	Chip-Widerstand	1kΩ ±1%	804737	VAL
R10	Chip-Widerstand	10kΩ ±1%	804749	VAL
R11	Chip-Widerstand	100Ω ±1%	804725	VAL
R12	Chip-Widerstand	15kΩ ±1%	804751	VAL

Schlumberger Technologies GmbH				Schaltteilliste	Anz. d. Seiten
08 Index	4089.3 Ä.Nr.	15.3.1994 Datum	VARGA Name	Bestückte Leiterplatte Typ: TX-MIXER	9
Erst.: Bau		Gepr.:		361 566 Sa	Seite Nr
Gerät: 4015 / 230 038					5

Pos.	Benennung	Wert	HNK-Nr.	Herst.
R13	Chip-Widerstand	1kΩ ±1%	804737	VAL
R14	Chip-Widerstand	560Ω ±1%	804734	VAL
R15	Chip-Widerstand	560Ω ±1%	804734	VAL
R16	Chip-Widerstand	1kΩ ±1%	804737	VAL
R17	Chip-Widerstand	1kΩ ±1%	804737	VAL
R20	Chip-Widerstand	1kΩ ±1%	804737	VAL
R21	Chip-Widerstand	1kΩ ±1%	804737	VAL
R22	Chip-Widerstand	1kΩ ±1%	804737	VAL
R23	Chip-Widerstand	1kΩ ±1%	804737	VAL
R24	Chip-Widerstand	8.2kΩ ±1%	804748	VAL
R25	Chip-Widerstand	820Ω ±1%	804736	VAL
R26	Chip-Widerstand	220Ω ±1%	804729	VAL
R27	Chip-Widerstand	220Ω ±1%	804729	VAL
R28	Chip-Widerstand	18Ω ±5%	804716	VAL
R30	Chip-Widerstand	150Ω ±1%	804727	VAL
R31	Chip-Widerstand	18Ω ±5%	804716	VAL
R32	Chip-Widerstand	18Ω ±5%	804716	VAL
R33	Chip-Widerstand	10Ω ±5%	804713	VAL
R34	Chip-Widerstand	10kΩ ±1%	804749	VAL
R35	Chip-Widerstand	2.2kΩ ±1%	804741	VAL
R36	Chip-Widerstand	12kΩ ±1%	804750	VAL
R37	Chip-Widerstand	3.3kΩ ±1%	804743	VAL
R38	Chip-Widerstand	1kΩ ±1%	804737	VAL
R40	Chip-Widerstand	1kΩ ±1%	804737	VAL
R41	Chip-Widerstand	100kΩ ±1%	804761	VAL
R42	Chip-Widerstand	220Ω ±1%	804729	VAL
R43	Chip-Widerstand	470Ω ±1%	804733	VAL
R44	Chip-Widerstand	10Ω ±5%	804713	VAL
R45	Chip-Widerstand	10Ω ±5%	804713	VAL

Pos.	Benennung	Wert	HNK-Nr.	Herst.
R46	Chip-Widerstand	4.7Ω ±5%	804709	VAL
R47	Chip-Widerstand	1kΩ ±1%	804737	VAL
R50	Chip-Widerstand	220Ω ±1%	804729	VAL
R51	Chip-Widerstand	1kΩ ±1%	804737	VAL
R52	Chip-Widerstand	1kΩ ±1%	804737	VAL
R53	Chip-Widerstand	1kΩ ±1%	804737	VAL
R54	Chip-Widerstand	100Ω ±1%	804725	VAL
R55	Chip-Widerstand	56Ω ±5%	804722	VAL
R56	Chip-Widerstand	56Ω ±5%	804722	VAL
R57	Chip-Widerstand	56Ω ±5%	804722	VAL
R60	Chip-Widerstand	100Ω ±1%	804725	VAL
R61	Chip-Widerstand	1kΩ ±1%	804737	VAL
R62	Chip-Widerstand	1kΩ ±1%	804737	VAL
R63	Chip-Widerstand	1kΩ ±1%	804737	VAL
R64	Chip-Widerstand	470Ω ±1%	804733	VAL
R65	Chip-Widerstand	1kΩ ±1%	804737	VAL
R70	Chip-Widerstand	47Ω ±5%	804721	VAL
R80	Chip-Widerstand	1kΩ ±1%	804737	VAL
R81	Chip-Widerstand	560Ω ±1%	804734	VAL
R82	Chip-Widerstand	1kΩ ±1%	804737	VAL
R83	Chip-Widerstand	12kΩ ±1%	804750	VAL
R84	Chip-Widerstand	220Ω ±1%	804729	VAL
R85	Chip-Widerstand	330Ω ±1%	804731	VAL
R86	Chip-Widerstand	180Ω ±1%	804728	VAL
R87	Chip-Widerstand	4.7Ω ±5%	804709	VAL
R88	Chip-Widerstand	220Ω ±1%	804729	VAL
R90	Chip-Widerstand	4.7Ω ±5%	804709	VAL
R91	Chip-Widerstand	1kΩ ±1%	804737	VAL
R92	Chip-Widerstand	12kΩ ±1%	804750	VAL

Pos.	Benennung	Wert	HNK-Nr.	Herst.
R93	Chip-Widerstand	330Ω ±1%	804731	VAL
R94	Chip-Widerstand	120Ω ±1%	804726	VAL
R95	Chip-Widerstand	4.7Ω ±5%	804709	VAL
R96	Chip-Widerstand	4.7Ω ±5%	804709	VAL
R97	Chip-Widerstand	1kΩ ±1%	804737	VAL
R100	Chip-Widerstand	12kΩ ±1%	804750	VAL
R101	Chip-Widerstand	220Ω ±1%	804729	VAL
R102	Chip-Widerstand	330Ω ±1%	804731	VAL
R103	Chip-Widerstand	82Ω ±5%	804724	VAL
R104	Chip-Widerstand	4.7Ω ±5%	804709	VAL
R105	Chip-Widerstand	4.7Ω ±5%	804709	VAL
R106	Chip-Widerstand	1kΩ ±1%	804737	VAL
R107	Chip-Widerstand	100Ω ±1%	804725	VAL
R110	Chip-Widerstand	1kΩ ±1%	804737	VAL
R111	Chip-Widerstand	10kΩ ±1%	804749	VAL
R112	Chip-Widerstand	220Ω ±1%	804729	VAL
R113	Chip-Widerstand	15kΩ ±1%	804751	VAL
R114	Chip-Widerstand	1kΩ ±1%	804737	VAL
R115	Chip-Widerstand	10kΩ ±1%	804749	VAL
R116	Chip-Widerstand	4.7kΩ ±1%	804745	VAL
R120	Chip-Widerstand	1kΩ ±1%	804737	VAL
R121	Chip-Widerstand	82Ω ±5%	804724	VAL
R122	Chip-Widerstand	270Ω ±1%	804730	VAL
T1	NPN Transistor	BFR93A	832287	VAL
T40	NPN Transistor	BFG92A	832292	VAL
T80	NPN Transistor	BFR93A	832287	VAL
T81	NPN Transistor	BFR93A	832287	VAL
T82	NPN Transistor	BFR93A	832287	VAL

Pos.	Benennung	Wert	HNK-Nr.	Herst.
T83	NPN Transistor	BC850B	832284	SIE

FM Modulator

The FM modulator is a 20-MHz oscillator that is kept to its center frequency by a phase-locked loop (PLL). It can be modulated by both a DC quantity (DC FM mode) and an AC quantity (AC FM mode).

The active element of the oscillator is transistor T1. The oscillator circuit is formed by capacitors C6, C10, variable-capacitance diodes GL4, GL5 and crystal Q1.

The generated signal is taken off the collector of the oscillator transistor and amplified to TTL level by inverter D2-B. Inverters D2-G, D2-F, D2-E, D2-C, D2-D are intended for isolating the signal paths. D flipflops D10-A, D10-B and NAND gate D1-D work as a phase comparator for the oscillator signal divided by 100 and the 20-MHz signal, applied via socket Bu47 and also divided by 100, which is produced by the master crystal in the RF Unit (230038). The dividers are D6-A, D6-B and D4-A, D4-B. The correction pulses of the phase comparator are summed by the active loop filter with operational amplifier A3 to form a control voltage that corrects the frequency or phase of the crystal oscillator by means of variable-capacitance diodes GL4, GL5.

In AC FM mode field-effect transistor T4 and gate D1-E connect the signals through and the control loop is made. In DC FM mode the PLL is interrupted by T4 and the crystal oscillator is then free-running. The frequency can be adjusted with potentiometer R33.

Voltage comparators A4-A, A4-B monitor the control voltage and signal asynchronism if the voltage is outside of its range.

Before the modulation signal reaches the variable-capacitance diodes, it is applied to amplifier A2, whose gain is set with switches A1-A, A1-B, A1-C to +0.5, -0.5, -1 or -0.25, depending on the output frequency of the test set.

Fine Decade

The fine decade generates a signal of 7.4 to 12.4 MHz in frequency increments of 100 Hz. The oscillator signal is divided by 80 by dividers D100, D101, so oscillator U100 works at a frequency that is higher by a factor of 80. When the analyzer mode is not selected, ie control line ANAL-ON is Low, the phase of the oscillator frequency is bound indirectly to the signal of the master crystal in the RF Unit (230038) by a PLL.

The phase comparator and divider are integrated into synthesizer device D105, the internal division ratio being increased by modulo-2 prescaler D103. The division ratios are programmed serially on the DATA control line after selection of the device on the ENABLE-5 control line.

The amplifier with transistor T100 and inverters D104-B, D104-G produce level matching between the prescaler and the synthesizer device. Phase comparison is made at a frequency of 8 kHz. The active loop filter with operational amplifier A101 sums the correction pulses of the phase comparator to form a control voltage that corrects the frequency of the oscillator by means of variable-capacitance diodes if the phase deviates. If this control operation is disturbed, the output level of operational amplifier A100 goes High and signals asynchronism.

When the analyzer mode is selected, ie control line ANAL-ON is High, the PLL is interrupted by switch A102-A. At the same time prescaler D103 is cut out and the output of the integrator with operational amplifier A104 is connected to the variable-capacitance diodes of the oscillator by switch A102-B. The speed of the frequency sweep is determined by the magnitude of the DC voltage that is applied across the made switch A102-D to the input of the integrator. For the forward sweep control line UP/DOWN is High, switch A102-C open, and the amplifier with operational amplifier A105 has gain of -1, because field-effect transistor T101 conducts. For the return sweep control line UP/DOWN is Low, switch A102-C made and the amplifier with operational amplifier A105 has gain of +1, because field-effect transistor T101 is cut off. The return sweep is about 15 times faster than the forward sweep.

In analzyer mode gate D102-D switches the output signal of the fine decade across a lowpass filter to signal line 8...13-MHZ-OUT, which leads to the Computer (250036), and this measures the momentary frequency during a sweep.

5-MHz Decade

This part of the circuit generates frequencies from 490 to 990 MHz in 5-MHz increments. For this purpose the 20 MHz of the FM modulator is divided down to 10 MHz and to 5 MHz by divider D200. The amplified 5 MHz is applied across transistor T200 to step-recovery diode GL200. Here a 5-MHz frequency spectrum is produced that is used in the range 490 to 990 MHz. This spectrum is down-converted in the sampling detector in mixer diode GL201 with the RF signal from VCO U200 that is amplified by A201.

When the VCO frequency hits a spectrum point, a control voltage is generated that is fed via loop filter A200 to the VCO. The synchronization detection ensures that the VCO can only synchronize with the set spectrum point. The signal for this is generated in the two PLL devices D201 and D202. The internal dividers are set by the Computer. The 10 MHz from D200 and the RF signal from VCO U200 are divided according to the setting and compared. D201 delivers a signal to the loop filter via T204 if the VCO frequency is more than 100 kHz above the set frequency. D202 delivers a signal to the loop filter via T206 if the VCO frequency is more than 100 kHz below the set frequency.

Adder PLL

The adder PLL produces an RF signal in the frequency range 500 to 1000 MHz with resolution of 100 Hz. The input signals come from the 5-MHz decade and from the fine decade. The 490 to 990 MHz of the 5-MHz decade is applied via a buffer amplifier, circuit T310 to T311, to the LO input of mixer MI3. Here it is down-converted with the RF signal that comes from VCO U300. In this signal path there is also a buffer amplifier, formed of transistors T300 and T301. The mixture product on the IF output of mixer MI300 is in the frequency range 7.4 to 12.4 MHz. It is converted to TTL level by T303 and applied to phase detector D303. The phase detector compares this 7.4 to 12.4 MHz with the 7.4 to 12.4 MHz of the fine decade. The loop filter with A301 converts the phase-detector signal into the required control voltage. This control voltage is fed to VCO U300 on pin 7.

The synchronization detection ensures that the VCO falls into the capture range of the phase detector if there are largish frequency errors. This synchronization detection consists of the two PLL devices D301 and D302. The internal dividers of D301 and D302 are set by the Computer. The 5-MHz decade signal via prescaler D300 and the VCO signal amplified by T300 are divided according to the settings and compared. D301 delivers a signal to the loop filter via A300 and T304 or T305 if the frequency of the VCO is below the capture range. D302 delivers a signal to the loop filter via A300 and T306 if the frequency of the VCO is above the capture range.

Output Divider and Filter

The signal of the adder PLL is divided by 2 or by 4 and filtered by lowpass filters. So there are frequencies on socket Bu46 in the range 125 to 1000 MHz with a distortion margin of better than 35 dBc. Depending on the driving, the RF signal is switched through to the selected signal path by PIN diodes. There are three different tunable lowpass filters. For 500 to 1000 MHz without a divider it is the circuit from L400 to L402. For the range 250 to 500 MHz the signal is divided by 2 in D400 and filtered by the lowpass L403 to L405. The lowest range of 125 to 250 MHz is divided by 4 in D401 and filtered by the lowpass L406 to L411. The lowpass filters are tuned by the variable-capacitance diodes GL405/GL406, GL412/GL413 and GL415/GL416. The slope of the set lowpass filters is controlled by A402 so that a level of -4 dBm ±2 dB is produced on the output of amplifier T405/T407. The peak-responding rectifier GL421 converts the RF output signal into a DC voltage. Controller A402 compares this DC to a setpoint and thus derives the control voltage for the variable-capacitance diodes.

2079.02

Schlumberger

Adjustment and Test Procedure

Necessary Equipment	Measuring Procedure	Measuring Point	Frequency	Adjust-ment	Set Value
	Equipment required: Digital voltmeter, eg Schlumberger 7150 DC power supply unit 0 to ±15 V, eg HP6236 Oscilloscope 100 MHz Spectrum analyzer to 2 GHz, eg MS611 RF probe (500 Ω), eg HP10020 Frequency counter to 1.3 GHz, eg HP5386 AF generator (low distortion), eg HP3325 Modulation meter with distortion meter, eg HP8902 Powermeter, eg Boonton 4200				
	1. FM modulator				
	1.1 Oscillator				
DVM	Set supply voltage.	I3	DC	R26	12.0 V
Oscilloscope	Check signal.	I5	20 MHz		approx. 20 MHz TTL
	1.2 PLL				
	Set "External AC OFF" on 4015.				
	Apply 20-MHz signal from RF Unit to socket Bu47.				
DVM	Measure varactor voltage.	I4	DC		6-8 V
	Check selfcheck message.				LED GL7 off
	Disconnect 20-MHz signal from socket Bu47.				
	Check selfcheck message.				LED GL7 on
	Reapply 20-MHz signal from RF Unit to socket Bu47.				

Issue	Date	Name	Unit	Sub Unit	Ref. No.	Series	Comment	Sheet
01	25.02.92	Pichon	STABILOCK 4015	Synthesis	213 038 A			1/9

Necessary Equipment	Measuring Procedure	Measuring Point	Frequency	Adjust-ment	Set Value
	2. Fine decade				
	2.1 Oscillator (361565)				
DVM	Measure voltage.	I1	DC		-12.7 to -11.3 V
Power supply	Connect DC source to oscillator input.	I10 (361531)	DC		
Spectrum analyzer	Measure frequency for input voltage of -10 V	I4			< 480 MHz
with	and measure power.				-20 ± 1 dBm
RF probe (500 Ω)	Measure frequency for input voltage of +12 V	I4			> 1010 MHz
	and measure power.				-20 ± 1 dBm
	Continuously vary input voltage from -10 V to +12 V and check output signal for nonharmonics, check continuous tuning and control voltage.	I4	450-2000 MHz		
DVM		I2	DC		< +3 V
	2.2 PLL				
	Set RX mode, 502.3999 MHz on 4015.				
	Synchronize frequency counter or spectrum analyzer with 4015.				
Oscilloscope	Check signal.	I14	approx. 7.4 MHz		Low < 0.8, High > 3 V
Frequency counter	Measure frequency.	I11	approx. 13 MHz		12.3999 MHz
or	Check selfcheck message.	I12	DC		< 0.7 V, LED GL101 on
spectrum analyzer	Disconnect 20-MHz signal from RF Unit from socket Bu47.				
Oscilloscope	Check selfcheck message.	I12	DC		> 3 V, LED GL101 off
	Reapply 20-MHz signal to socket Bu47.				
	Set 502.4 MHz on 4015.				
	Measure frequency.	I11			7.4 MHz

2089.02

Schlumberger

Adjustment and Test Procedure

Necessary Equipment	Measuring Procedure	Measuring Point	Frequency	Adjust-ment	Set Value
	3. 5-MHz decade				
	3.1 Oscillator adjustment Adjust oscillator U200 as under item 2.1. But connect DC source to R262 and separate control line to R261.				
	3.2 Step-recovery multiplier				
Frequency counter	Measure reference frequency.	I30	5 MHz		5 MHz
Spectrum analyzer with RF probe (500 Ω)	Measure n*5-MHz spectrum with RF probe (10:1). Set level-reference point on spectrum analyzer with Cal output.	I35	490-990 MHz		-20 to -35 dBm
	3.3 Synchronization detection Setting on 4015 f = 510 MHz (corr. to 500 MHz spectrum frequency).				
Frequency counter	Measure reference frequency.	I32 and I34	100 kHz		100 kHz / TTL pulse
Power supply Spectrum analyzer with RF probe (500 Ω) DVM	Measure detection of capture range. Separate control line to R261, apply approx. -7 Vdc to R262 and measure oscillator frequency on I36.				
	Tune frequency in range 450-550 MHz with DC and measure control voltage.	I36	450-550 MHz		approx. 0 dBm
	For f > 500.10 MHz LED GL206 lights.	I39	DC		V < -10 V
	For f < 499.90 MHz LED GL206 lights.	I39	DC		V > +10 V
	Between 499.90 and 500.10 MHz LED GL206 does not light.				

Issue	Date	Name	Unit	Sub Unit	Ref. No.	Series	Comment	Sheet
01	25.02.92	Pichon	STABILOCK 4015	Synthesis	213 038 A			3/9

Necessary Equipment	Measuring Procedure	Measuring Point	Frequency	Adjust-ment	Set Value
	3.4 Loop filter Setting on 4015 f = 510 MHz (corr. to 500 MHz spectrum frequency).				
Power supply	As under item 3.3, also desolder R214. Set frequency with DC to f > 500 MHz.				
Oscilloscope	Adjust DC offset.	I38	DC with superimposed AC	R209	V = 0 ± 0.01 Vdc
Oscilloscope	Measure phase-detector slope. Tune frequency in range 490-990 MHz with DC, there must be one beat every 5 MHz.	I38	AF beat		V > 0.2 Vpp
	Remove DC, resolder R214 and R261.				
Frequency counter	3.5 Functional test Setting on 4015 f = 500-995 MHz in 5-MHz steps corresponds to spectrum-frequency range f = 490-990 MHz. LED GL206 does not light.	R249	490-990 MHz		490-990 MHz

2099.02

Necessary Equipment	Measuring Procedure	Measuring Point	Frequency	Adjust-ment	Set Value
	4. Adder PLL				
	4.1 Oscillator adjustment Adjust oscillator U300 as under item 2.1. But connect DC source to R378 and separate control line to R377.				
	4.2 Synchronization detection Setting on 4015 f = 500 MHz (corr. to 490 MHz spectrum frequency).				
Frequency counter	Measure reference frequency.				
Oscilloscope	On testpoint I40 f = 490 MHz/256 = 1.914xx MHz	I40	1.91xx MHz		1.91xx MHz V > 0.5 Vpp
	On testpoint I42 and I44 f = 490 MHz/(256*8) = 239.xx kHz	I42 and I44	239.xx kHz		239.xx kHz TTL pulse
	Measure detection of capture range.				
Power supply	Separate control line to R377, apply DC to R378. Setting on 4015 f = 500 MHz (corr. to 490 MHz spectrum frequency).				
Oscilloscope	Tune frequency in range 450-550 MHz with DC and measure control voltage for				
	f < 490 MHz,	A300/1	DC		V > +10 V
	f > 505.3125 MHz.	A300/7	DC		V < -10 V
	Setting on 4015 f = 995 MHz (corr. to 985 MHz spectrum frequency).				
	Tune frequency in range 950-1050 MHz with DC and measure control voltage for				
	f < 985 MHz	A300/1	DC		V > +10 V
	f > 1016 MHz	A300/7	DC		V < -10 V

Necessary Equipment	Measuring Procedure	Measuring Point	Frequency	Adjust-ment	Set Value
	4.3 Mixer check				
	Setting on 4015 f = 995 MHz.				
Power supply Frequency counter Oscilloscope	Tune frequency in range 986-1020 MHz with DC.	I45	approx. 1-34 MHz		TTL level
	4.4 Loop filter				
	Setting on 4015 f = 500 MHz.				
Power supply Oscilloscope	Tune frequency in range 450-550 MHz with DC and measure control voltage for				
	f > 500 MHz LED GL301 lights.	I46	DC		V < -10 V
	f < 500 MHz LED GL301 lights.	I46	DC		V > +10 V
	Remove DC, resolder R377.				
	4.5 Functional test				
Spectrum analyzer with RF probe (500 Ω)	Setting on 4015 f = 500 MHz, LED GL301 does not light.	R379	500.0 MHz		500.0 MHz
	Setting on 4015 f = 740 MHz, LED GL301 does not light.	R379	740.0 MHz		740.0 MHz
	Setting on 4015 f = 999 MHz, LED GL301 does not light.	R379	999.0 MHz		999.0 MHz

2089.02

Schlumberger

Adjustment and Test Procedure

Necessary Equipment	Measuring Procedure	Measuring Point	Frequency	Adjust-ment	Set Value
	5. Output divider and filter				
Oscilloscope	5.1 Driving A400 A400 A401 Setting on 4015 Pin1 Pin7 Pin7 f = 500 MHz +10V -10V -10V f = 250 MHz -10V +10V -10V f = 125 MHz -10V -10V +10V				
DVM	5.2 Measure ALC and filter. Measure DC reference voltage.	I54	DC		V = 0.148 ±0.01 V
Powermeter Spectrum analyzer DVM	Measure level, distortion margin and control voltage. Setting on 4015 f = 500-999 MHz f = 250-499 MHz	Bu46	DC		-4 dBm ±2 dB Dist. < -33 dBc
	f = 125-249 MHz LED GL422 does not light.	I53	DC		V = -13 to +11 V

Issue	Date	Name	Unit	Sub Unit	Ref. No.	Series	Comment	Sheet
01	25.02.92	Pichon	STABILOCK 4015	Synthesis	213 038 A			7/9

Necessary Equipment	Measuring Procedure	Measuring Point	Frequency	Adjust-ment	Set Value
	6. Modulation				
	6.1 AC frequency modulation				
	Set RX mode, 125 MHz, 0 dBm on 4015.				
	Select function "Ext AC-FM ON".				
AF generator	Apply AF signal on "EXT MOD" socket.	I6	1 kHz		500 mVrms
Spectrum analyzer	Set 1st carrier zero (= 2.405 kHz deviation).	Bu46	125 MHz	R27 rough,	< -60 dBc
DVM/AC	Apply AF signal on "EXT MOD" socket.	I6	1 kHz	R22 fine	3.12 Veff
Modulation meter	Deviation check (AF bandwidth 50 Hz to 15 kHz, ±PEAK/2)	Bu46	125 MHz		15 ± 0.6 kHz
	Deviation check (AF bandwidth 50 Hz.to 15 kHz, ±PEAK/2)	Bu46	250 MHz		15 ± 0.6 kHz
	Deviation check (AF bandwidth 50 Hz.to 15 kHz, ±PEAK/2)	Bu46	500 MHz		15 ± 0.6 kHz
	Apply AF signal to "EXT MOD" socket.	I6	1 kHz		1.25 Vrms
Modulation meter	Measure AF distortion (AF bandwidth 50 Hz to 15 kHz).	Bu46	125 MHz		< 1 %
	6.2 DC frequency modulation				
Frequency counter	Synchronize frequency counter with 4015.				
	Set RX mode, 999 MHz on 4015.				
	Select function "Ext DC-FM ON".				
	Set output frequency.	Bu46		R34 rough, R33 fine	999 MHz ±100 Hz

2089.02

Schlumberger

Adjustment and Test Procedure

Necessary Equipment	Measuring Procedure	Measuring Point	Frequency	Adjust-ment	Set Value
	7. Analyzer				
	Set RX mode, 125 MHz, 0 dBm on 4015.				
Oscilloscope	Check whether signal is on.	I14			
	Set analyzer mode on 4015 (f = 125 MHz,		approx: 1 MHz		low < 0.7 V, high > 3 V
	span = 10 MHz).	I10			
Oscilloscope	Check whether signal is cut out.	I14	approx: 1 MHz		no AC
Oscilloscope	Check control voltage.	I13	(chopped sawtooth)		approx. -8 to +8 V
Oscilloscope	Measure signal amplitude.	I7	7.4 to 12.3999 MHz		> 200 mVpp

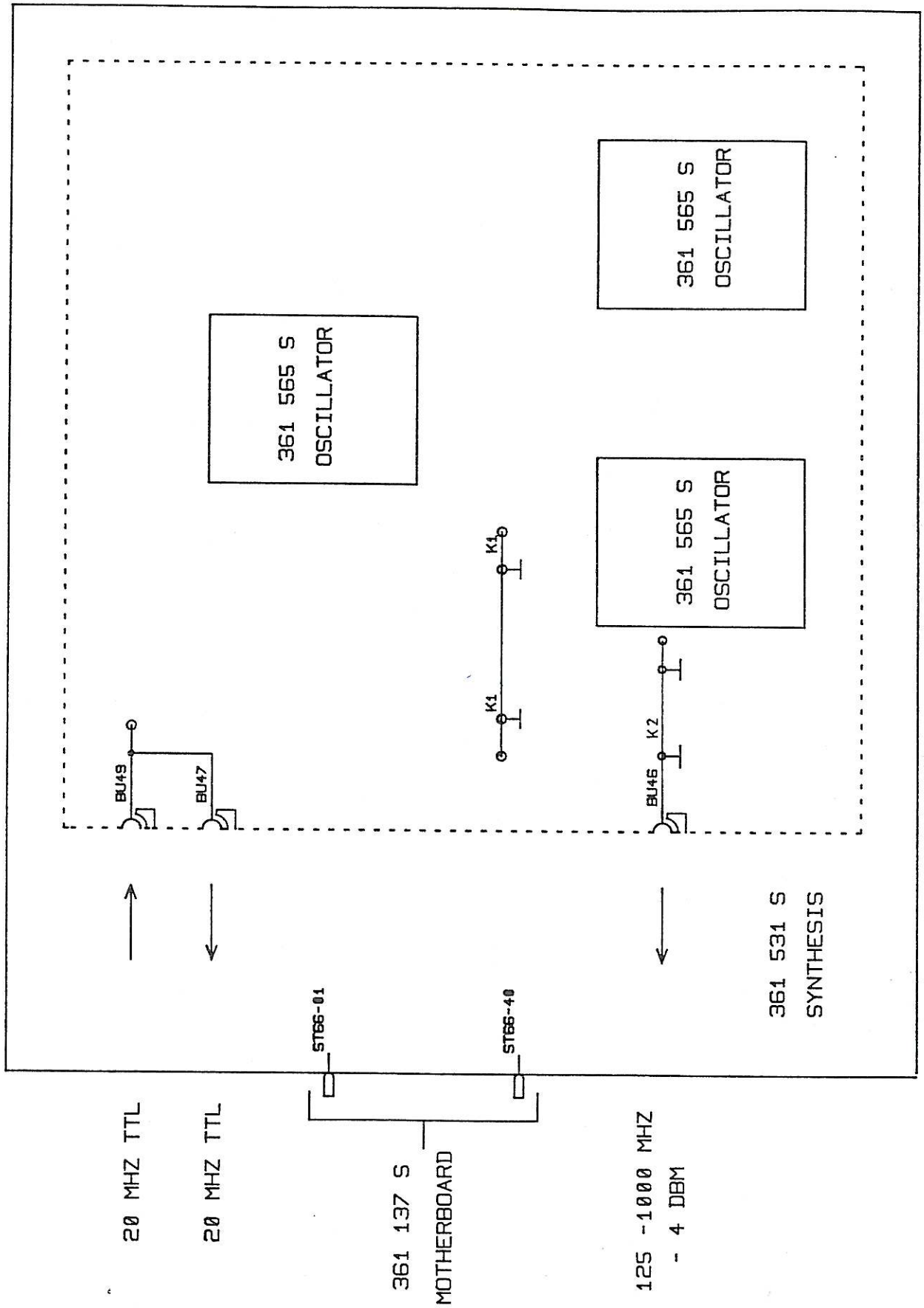

02	1089.12	8.2.91	Reinhold	NORM.		
01	0089.46	30.8.90	Si	GEPR.		
00	0089.24	3.7.90	UNGER	BEARB.	3.7.90	UNGER
INDEX ISS.	Ä.-NR. MODIF.	DATUM DATE	NAME NAME		DATUM DATE	NAME NAME

SCHLUMBERGER
TECHNOLOGIES GMBH
INGOLSTÄDTER STR.67A
8000 MÜNCHEN 46

SYNTHESIS

213 038 S

GERÄT: 4015

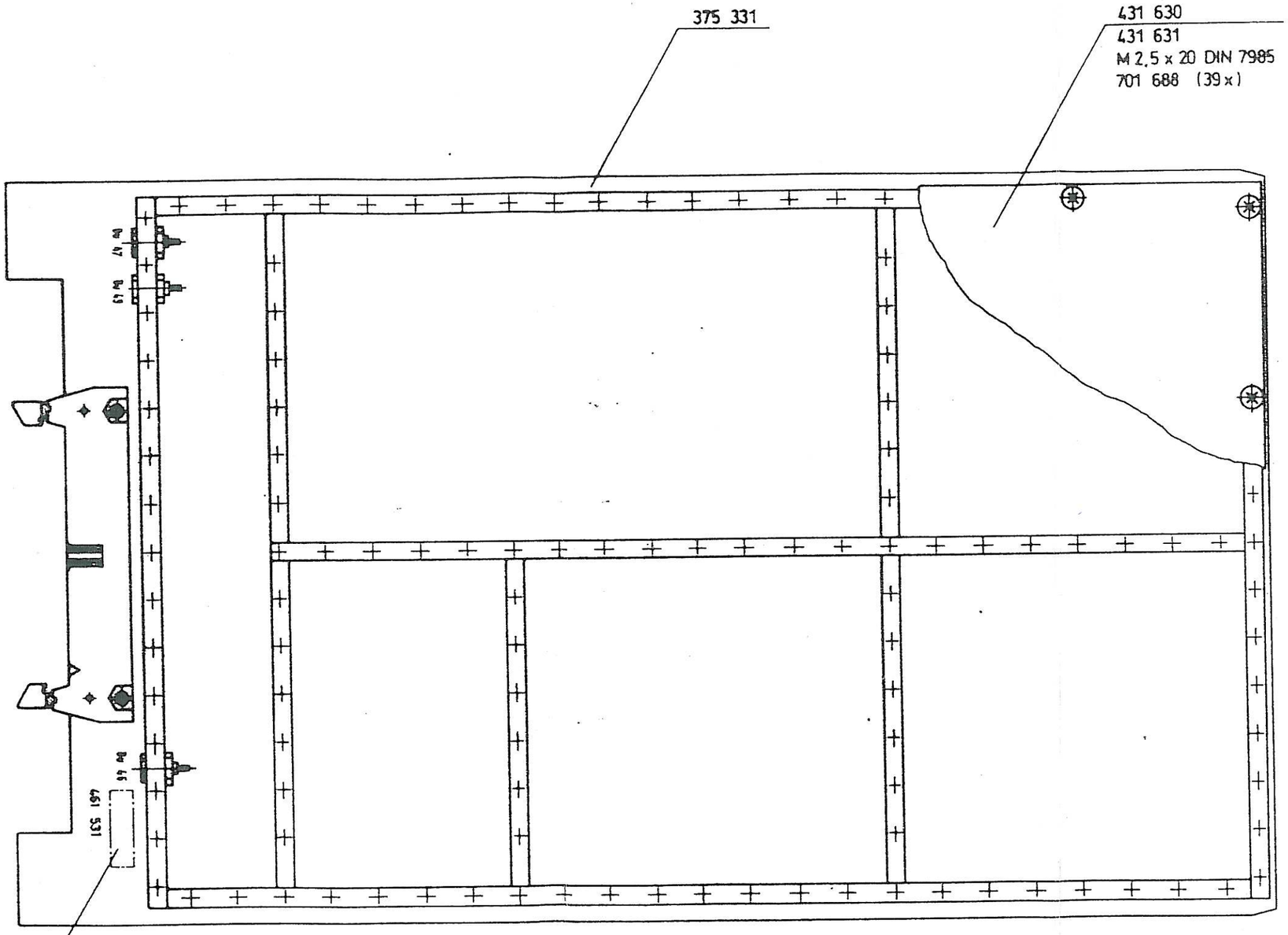

Serien- und Fertigungsnummer aufgeklebt
Klebeschild Typ 1 NW 10 R 5 x 16
selbstzerstörend

Rev No	Rev Sht	Date	Name
00			
08			
07			
06			
05			
04			
03			
02	1089.12	8.2.'91	Reinh.
01			
00			

Rohteil / Initial part

Werkstoff / Material

Oberfläche / Surface

Freimaßtoleranzen / default tolerance

Scale: 1:1

DIN A3

1991	Date	Name
Drawn	8.2.	Reinhold
Designed		
Checked		

Schlumberger Technologies GmbH
Ingolstädter Straße 67 a
8000 München 46

Bezeichnung / Description: SYNTHESIS

Zeichnungsnr / Drawing No: 213 038

Gerät / Unit: 4015 / 201 238

Diese Zeichnung ist unser Eigentum. Vervielfältigung, unbefugte Verwertung, Mitteilung an andere ist strafbar und schadenersatzpflichtig.

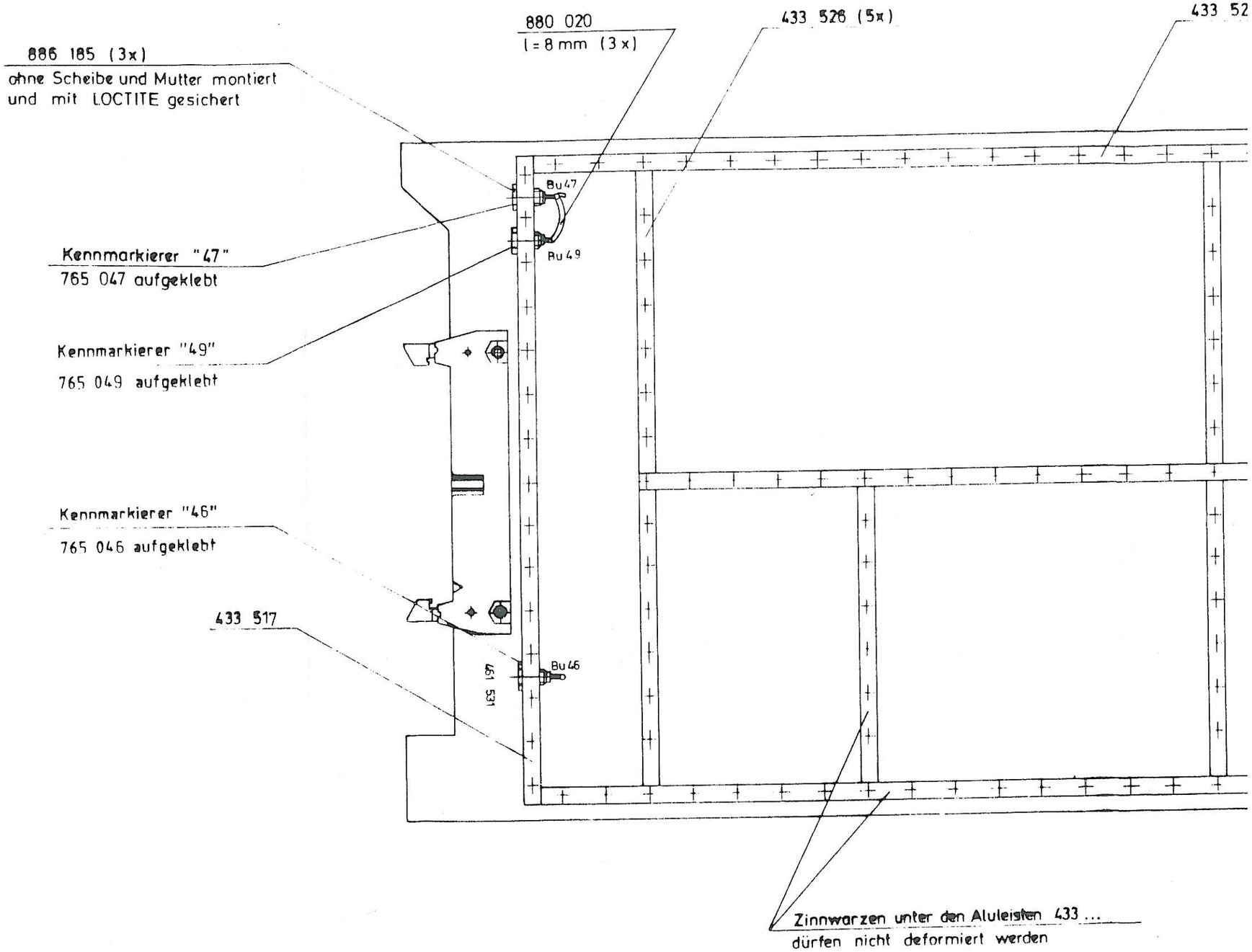
886 185 (3x)
ohne Scheibe und Mutter montiert
und mit LOCTITE gesichert
880 020
l = 8 mm (3 x)
433 528 (5x)
433 52
Bu 47
Bu 49
Kennmarkierer "47"
765 047 aufgeklebt
Kennmarkierer "49"
765 049 aufgeklebt
Kennmarkierer "46"
765 046 aufgeklebt
433 517
Bu 46
451 531
Zinnwarzen unter den Aluleisten 433 ...
dürfen nicht deformiert werden

weich gelötet

(2 x)

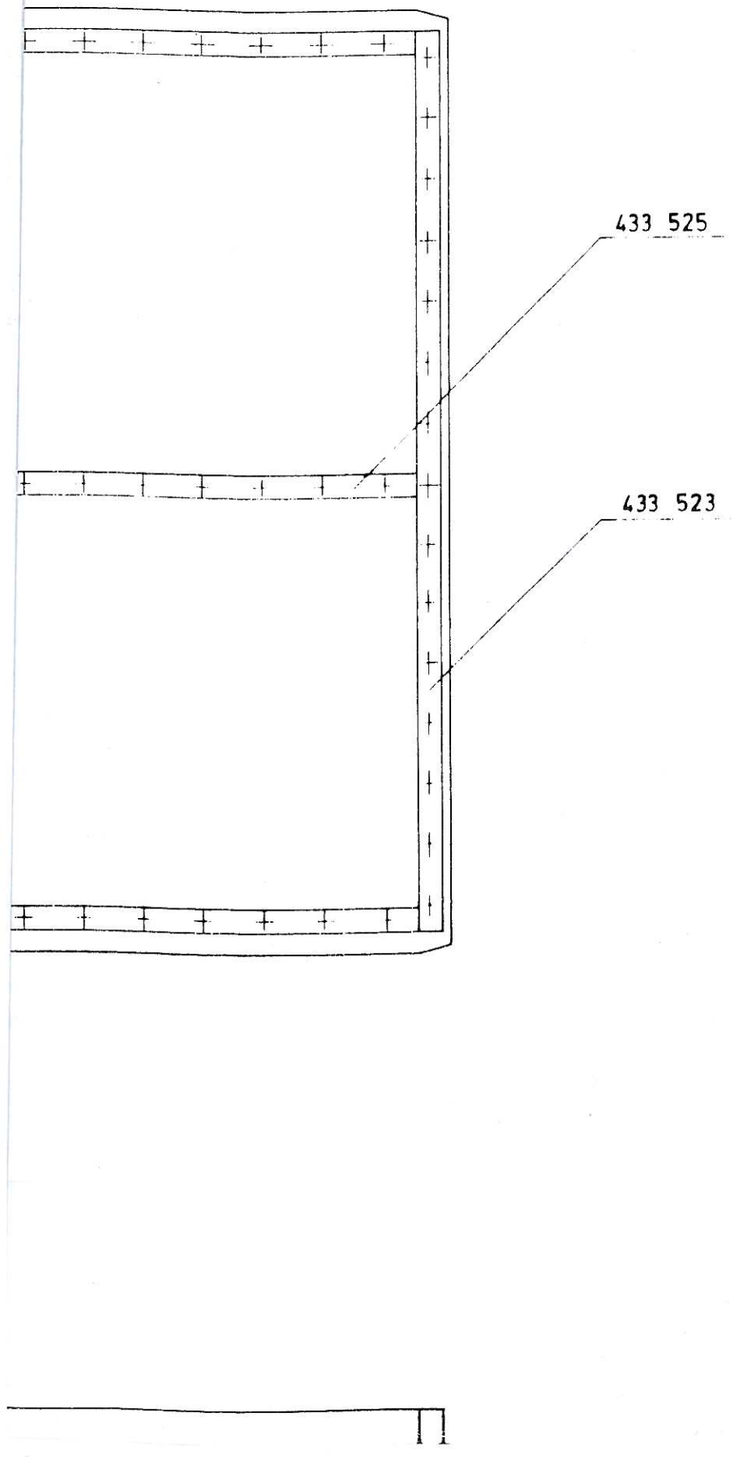

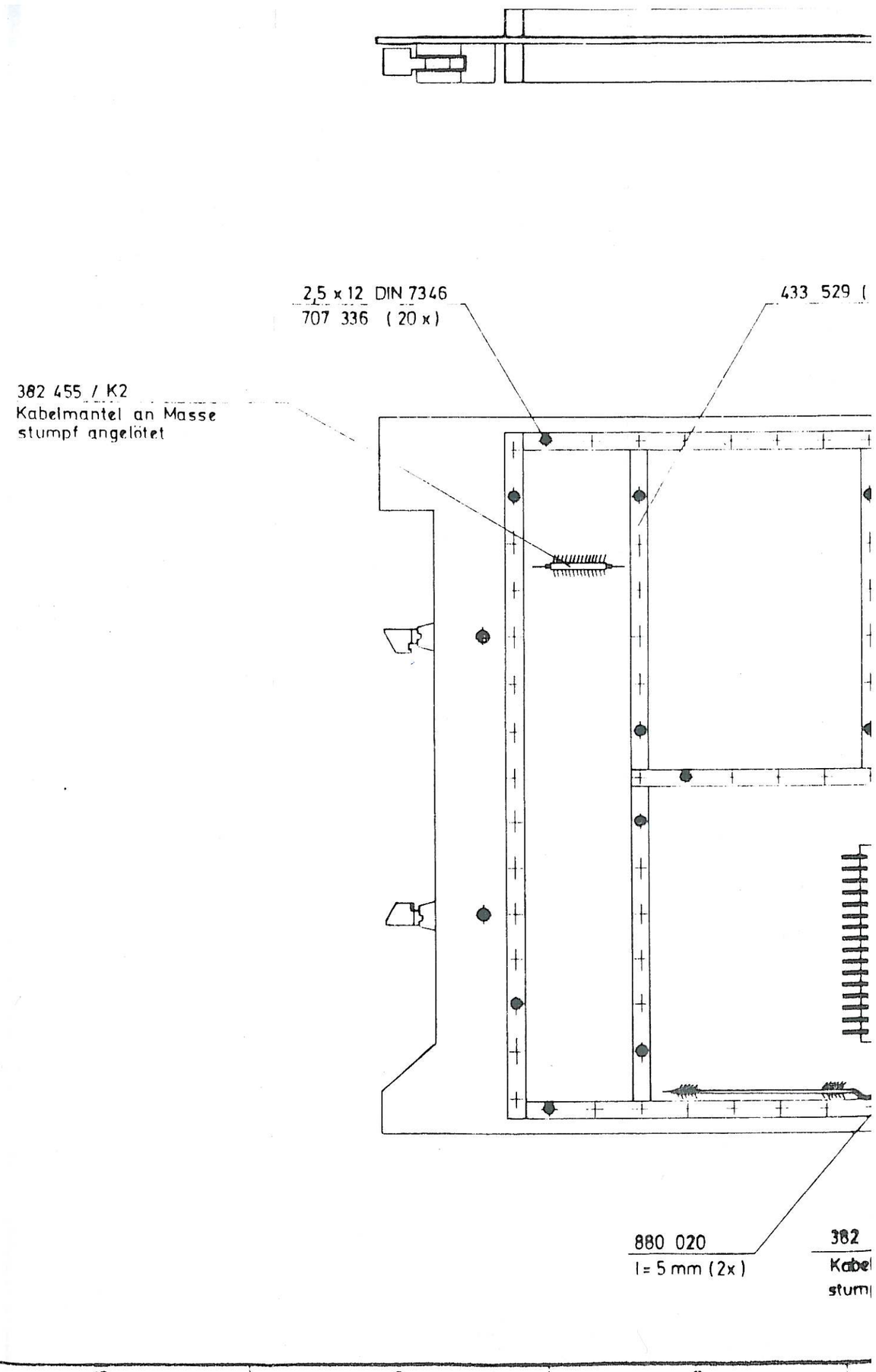

Schaltplanpositionierung = 213 038 S / Sa

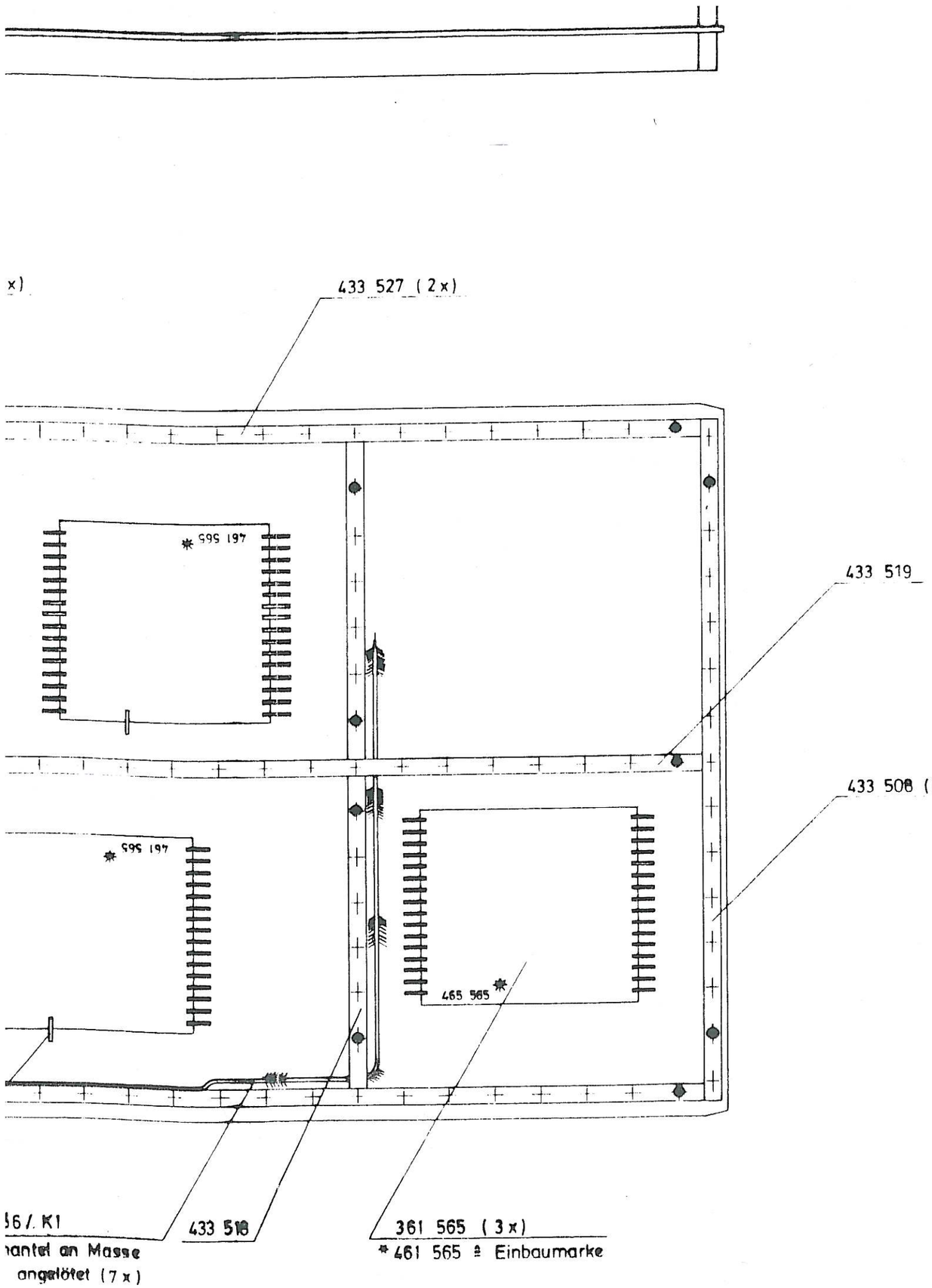

⬭ = Kontrollmaß

03	3089,7	10.8.93	Kr.				
02	3089,4	9.2.93	Kr.				
01	1089,45	14.6.91	Kr.				
00	1089,12	8.2.91	Kr.				
Ausgabe	Änderung Mittig	Datum	Name				

1991	Datum	Name	
ges.	8.2.91	Kr.	
bearb.	4.2.91		
gepr.			

1:1

Schlumberger Technologies
Ingolstädter Straße 83a
8000 München 45

FLAT MODUL
Typ : SYNTHESIS

375 331

Gerät 4015 / 213 038

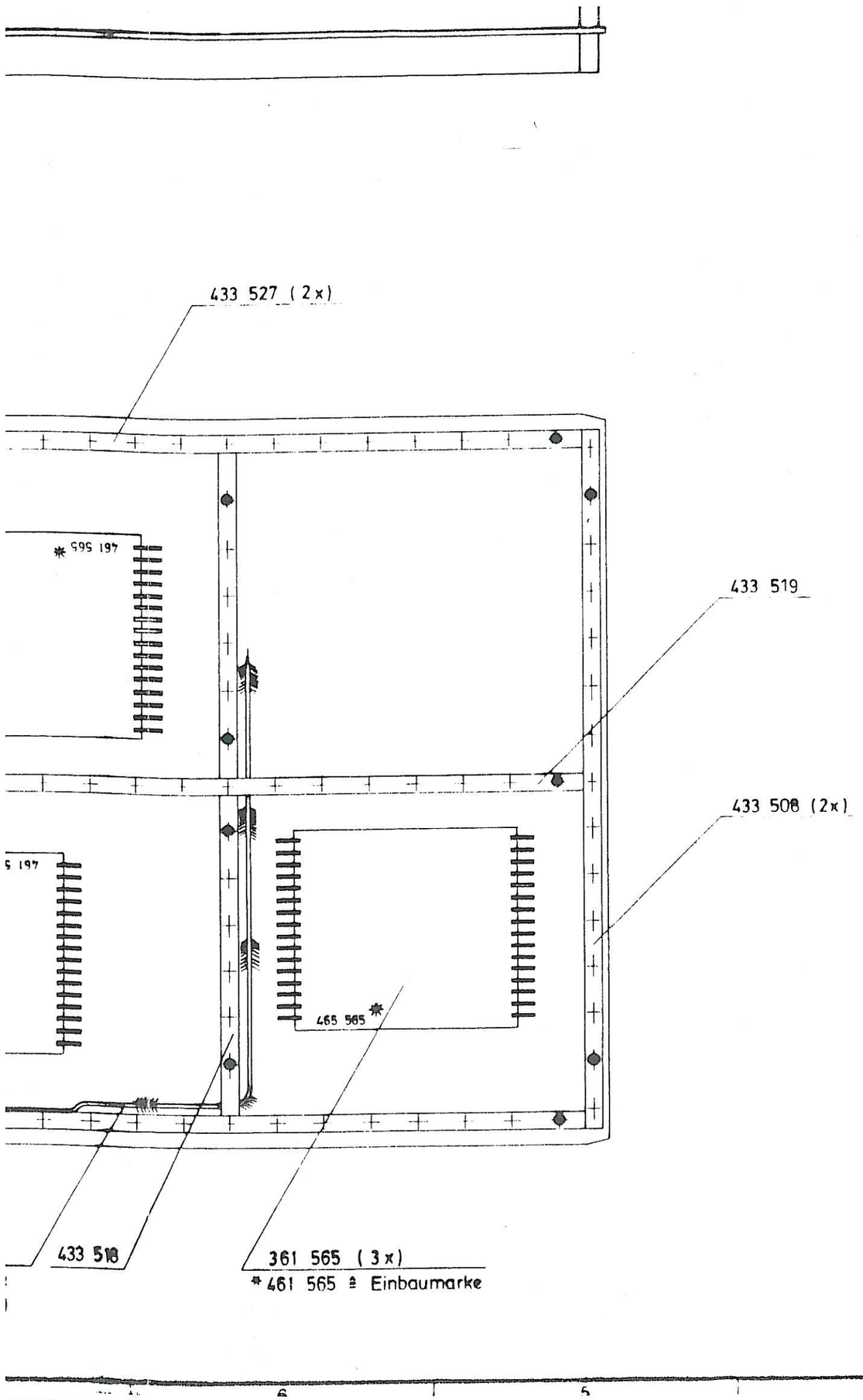

= Kontrollmaß

Ausgabe	Änderung Mittlg.	Datum	Name
03	3089,7	10.8.93	Kr.
02	3089,4	9.2.93	Kr.
01	1089,45	14.6.91	Kr.
00	1089,12	8.2.91	Kr.

Dichte

Werkstoff

Oberfläche

Freimaß Toleranzen

Maßstab 1:1

1991	Datum	Name
gez.	8.2.91	Kr.
bearb.	1.7.91	
gepr.		

Schlumberger Technologies GmbH
Ingolstädter Straße 8 a
8000 München 46

FLAT MODUL
Typ : SYNTHESIS

375 331 E

Gerät 4015 / 213 038

Diese Zeichnung ist unser Eigentum. Vervielfältigung, unbefugte Verwertung, Mitteilung an andere ist strafbar und schadenersatzpflichtig.

Pos. REF. NO.	Wert VALUE	Bezeichnung Schlumberger PART NO.	Hersteller MANUFACT	Pos. REF. NO.	Wert VALUE	Bezeichnung Schlumberger PART. NO	Hersteller MANUFACT
1	Bestückte Leiterplatte	361 531	SCHL				
	hierzu	361 531 Sa					
3	Bestückte Leiterplatte	361 565	SCHL				
	hierzu	361 565 Sa					
Bu 46	82 MCX-50-0-1-133	886 185	SUHN				
Bu 47	82 MCX-50-0-1-133	886 185	SUHN				
Bu 49	82 MCX-50-0-1-133	886 185	SUHN				
K 1	Vollmantelkabel	382 456	SCHL				
K 2	Vollmantelkabel	382 455	SCHL				

07				Schlumberger Meßgeräte GmbH Ingolstädter Straße 67a 8000 München 46	Schaltteilliste EL. PARTS LIST	Liste besteht LIST CONSISTS
06					Benennung DESCRIPTION: SYNTHESIS	aus OF 1
05						
04						Blatt SHEETS
03						
02	1089.12	8.2.´91	Reinh.	1990 / Tag DATE / Name NAME	Bezeichnung Schlumberger PART NO: 213 038 Sa	Blatt Nr SHEET NO
01	0089.46	30.8.90	Si			
--	0089.4	24.4.90	Kr.	geschr 24.4.90 Kr.	Hierzu Schaltplan SEE CIRCUIT DIAGRAM: 213 038 S	1
Ausgabe ISSUE	Änd.-Mittig Nr MODIFIC NO	Tag DATE	Name NAME	bearb / gepr	Gerät: 4015	

Diese Zeichnung ist unser Eigentum. Vervielfältigung, unbefugte Verwertung, Mitteilung an andere ist strafbar und schadenersatzpflichtig.

Erich Feucht, München 10.6397.80

DIVIDER 2

DIVIDER 40

U100

3615655
RF-OSCILLATOR 1

OUTPUT1 CA.+1DBM

OUTPUT2 CA.+1DBM

12V-KONST

+15V/B

+12V-KONST

OSCILLATOR
592..992MHZ

D100
UPB584G

D101
SP8716MP

D102E
PC74HCT00T

D102B
PC74HCT00T

C178 near pin 11

D102C
PC74HCT00T

MP10

DIVIDER
128/129

D103
MC12022AD

T100
BC850B

TP14

DIVIDER.
PHASE DETECTOR

800KHZ

D105
NJ88C24MA

D104B
PC74HCT04T

D104D
PC74HCT04T

A101
TL071CD

DG441DY
A102A

A102B
DG441DY

A102C
DG441DY

AD711KR
A104

TP13

-12V-KONST

DATA

CLOCK

ENABLE-5

A100
S08

TP12

SELECHECK
1=OK

SELECHECK 2

GL101
LSS260-DO

D102A
PC74HCT100T

D104A
PC74HCT04T

D102D
PC74HCT00T

D104G
PC74HCT04T

D104F
PC74HCT04T

D104E
PC74HCT04T

SWEEP CONTROL

09	4089.17	02.12.94	VARGA	DESIGNED			
08	4089.9	30.05.94	Bau	CHECKED			
07	3089.7	17.05.93	VARGA	DRAWN	21.8.89	FLE	
INDEX ISS	A.-NR. MODIF.	DATUM DATE	NAME NAME		DATUM DATE	NAME NAME	

9 8 7 6 5 4 DIESE ZEICHNUNG IST

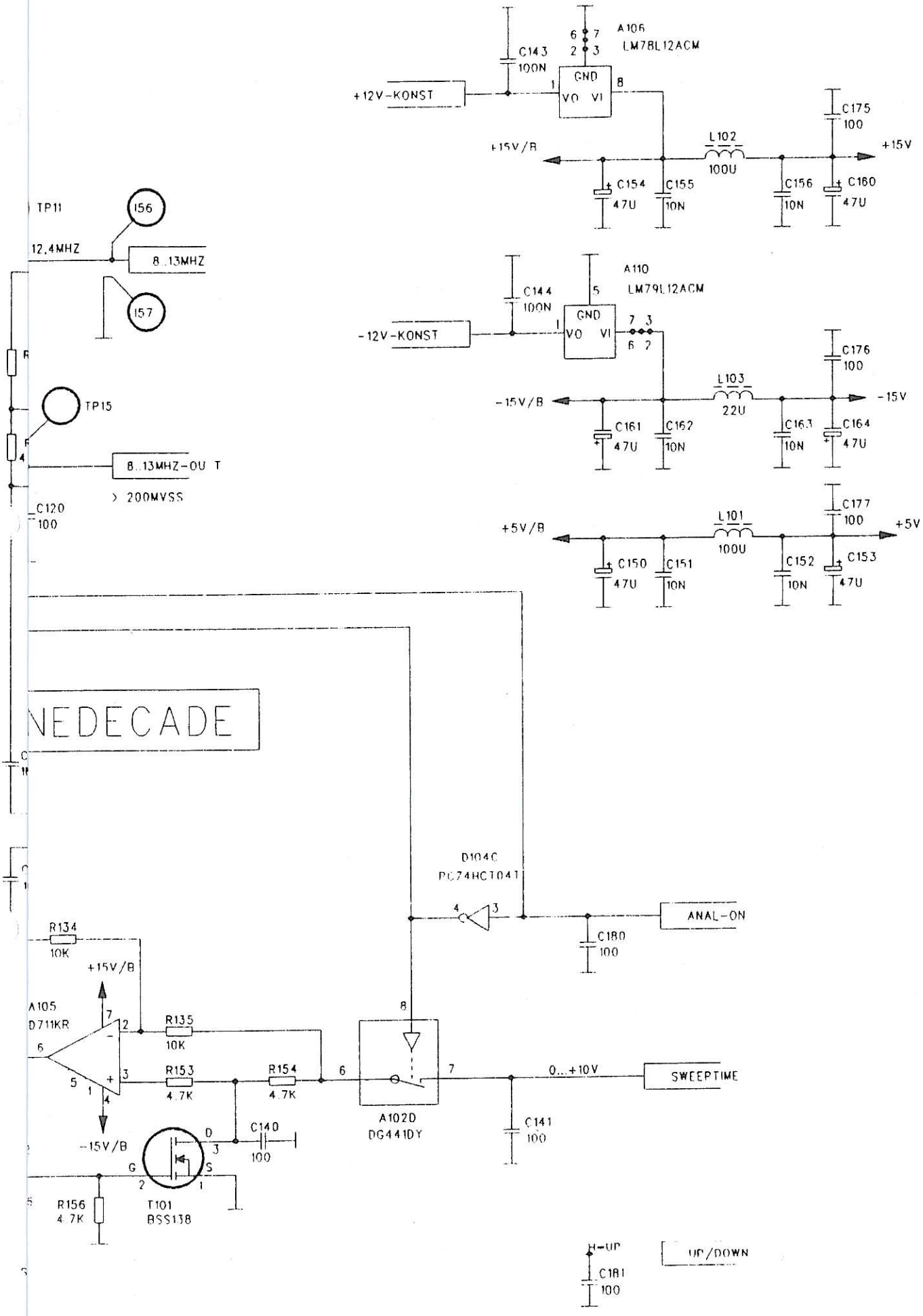

WAVETEK WIRELESS COMMUNICATIONS DIVISION Gutenbergstr. 2-4 85737 ISMANING	BEZEICHNUNG/DESCRIPTION: SYNTHESIS	ZEICHNUNGSNR /DRAWING NO.: 361 531 5	2 VON/OF 6
		PROJECT/GROUP: 4015 / 213 038	BLATT SHEET

UNSER EIGENTUM. VERVIELFÄLTIGUNG, UNBEFUGTE VERWERTUNG, MITTEILUNG AN ANDERE IST STRAFBAR UND SCHADENERSATZPFLICHTIG.

This drawing is the property of WAVETEK. Reproduction, unauthorized use, communikation to a third party is liable to prosection and liable for damages.

C316. C317. C318. C319 auf Lage

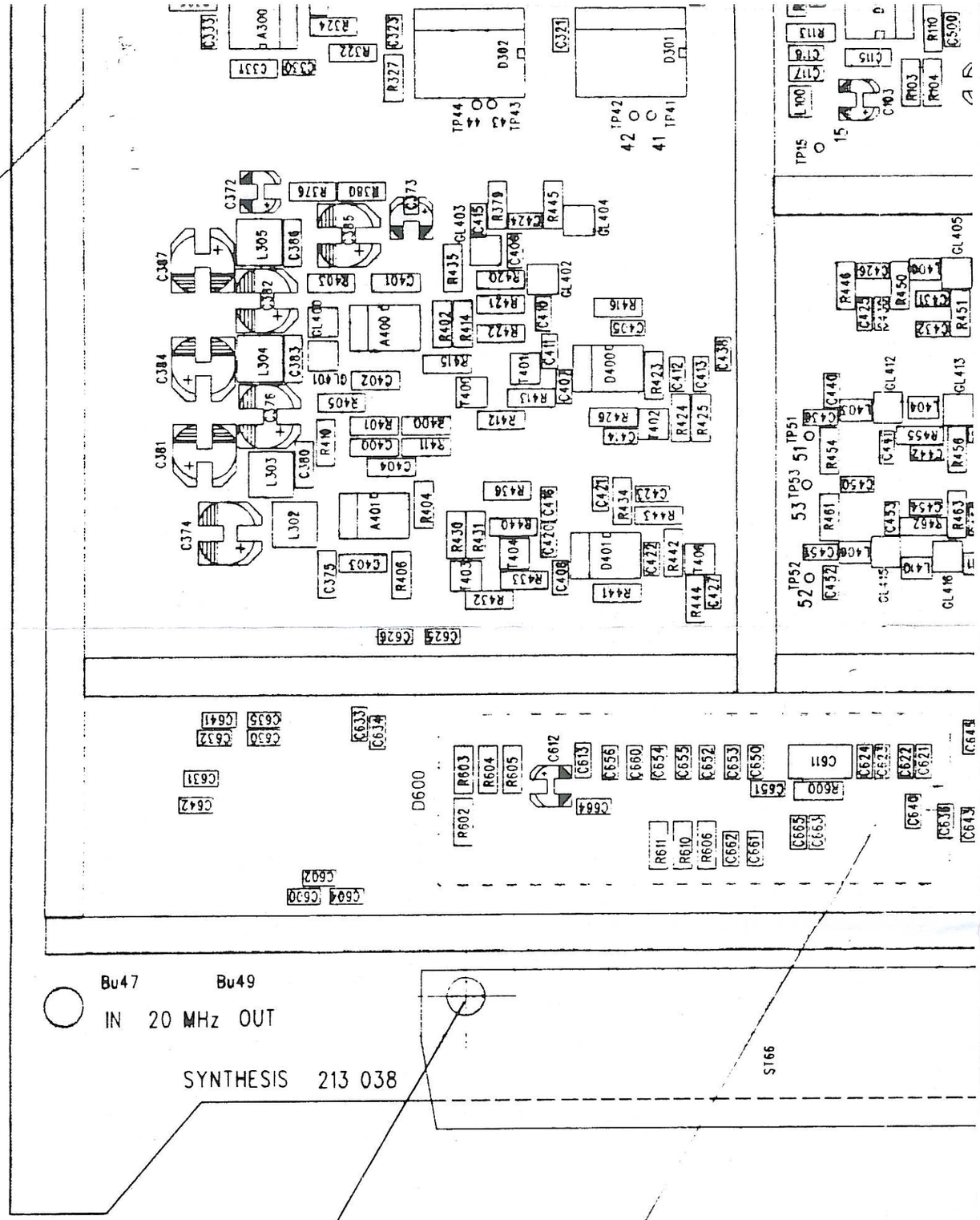

A 2.5x0.3x10 DIN 7340
708 330 (2x)

D600 auf Lage 2

A | B | C | D | E | F

Reflow gelötet und Sonderlötung

Hierzu Bauteilklebemaske 461 531 07

L204 mit 761 021 festgeklebt

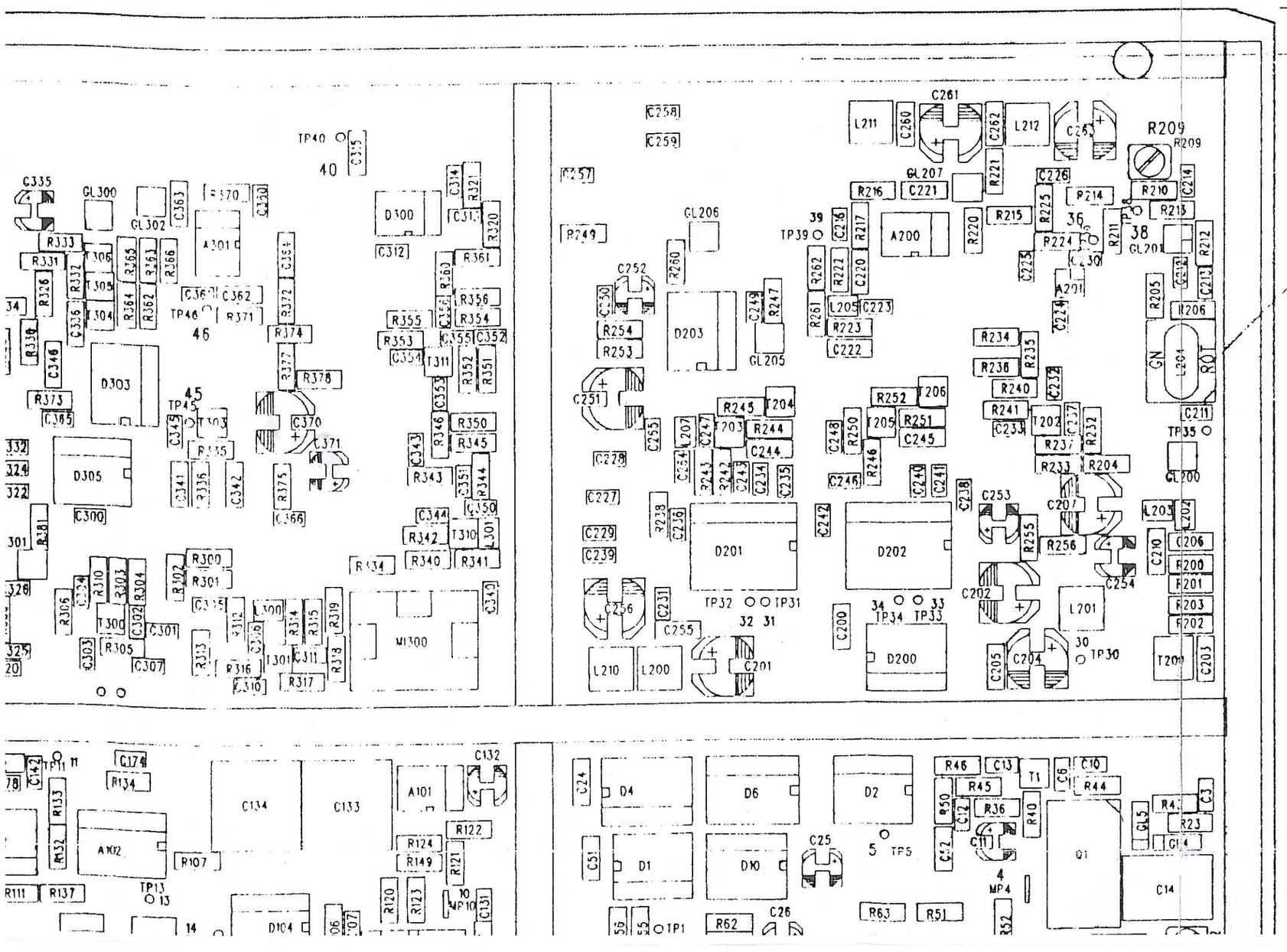

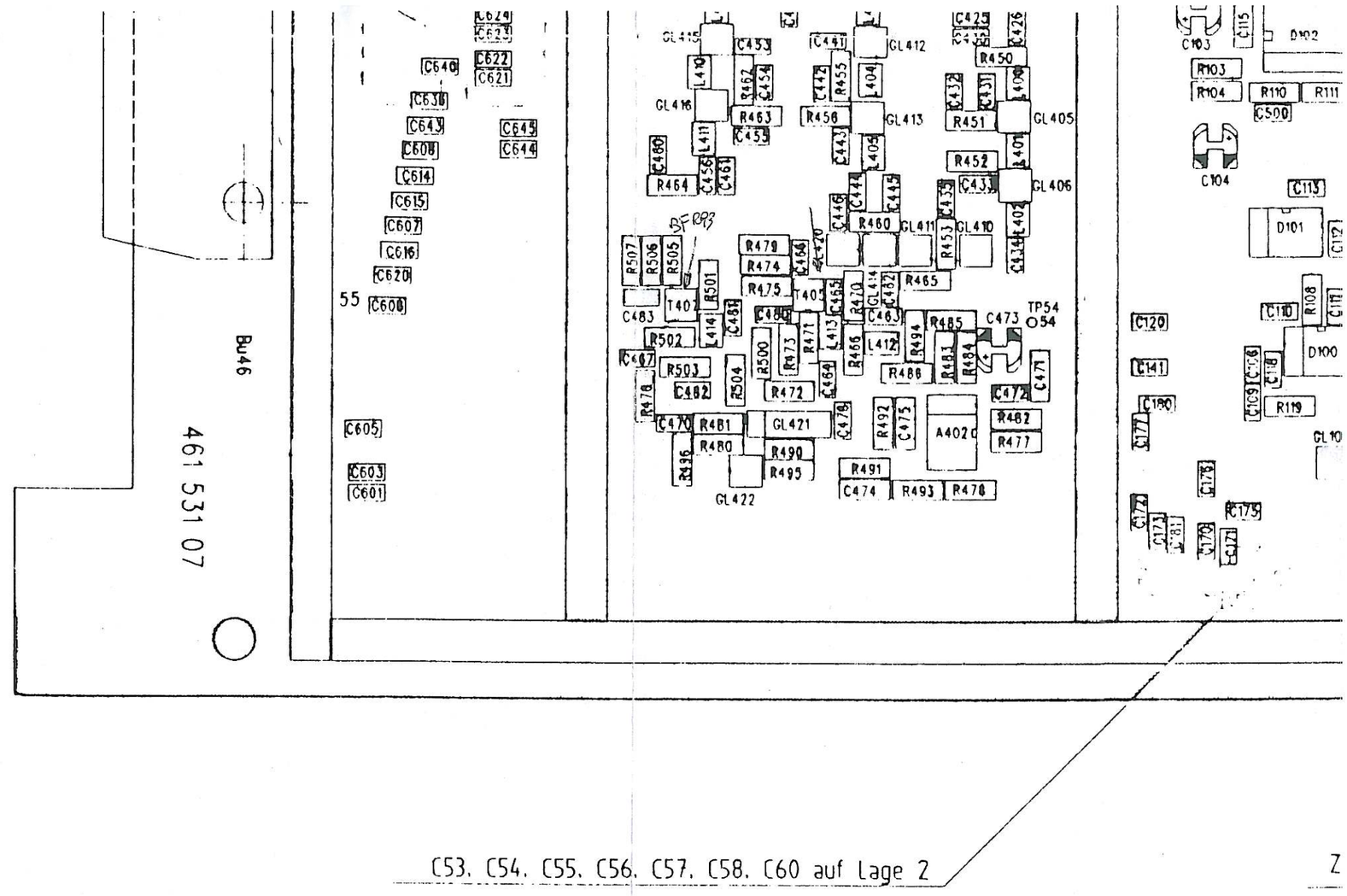

C53. C54. C55. C56. C57. C58. C60 auf Lage 2

Z

G

H

J

K

1 2 3 4 5 6 7 8

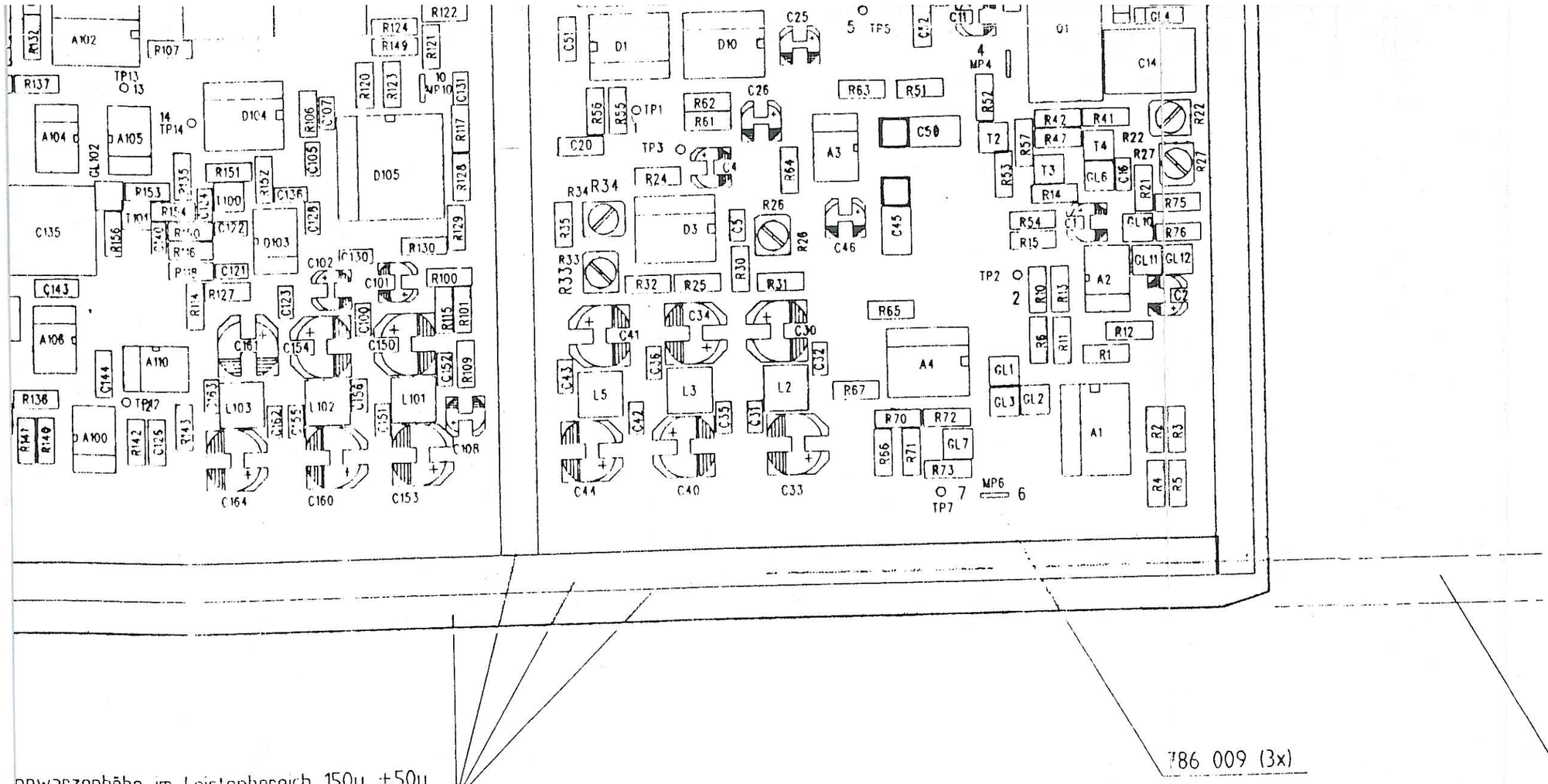
A102
A104
A105
A106
A110
A100
D104
D105
D103
C135
C143
C144
C102
C101
C154
C150
C152
C164
C160
C153
C108
L103
L102
L101
D1
D10
C25
TP5
C51
C20
TP1
TP3
R62
R61
C26
R63
R51
C50
A3
R64
R34
R24
C4
R26
D3
C5
C46
C45
R33
R32
R25
R30
R31
C34
C30
C41
C36
C32
C43
C42
C40
C33
L5
L3
L2
R65
A4
R67
R70
R72
R66
R71
R73
GL7
TP7
MP6
MP4
R52
T2
T4
T3
GL6
C16
R42
R41
R47
R57
R53
R14
R54
R15
R75
R76
GL10
GL11
GL12
C17
C2
TP2
A2
R30
R13
R36
R11
R12
R1
GL1
GL3
GL2
A1
R2
R3
R4
R5
C14
R22
R27
R21
C11
C12
Q1
R124
R149
R121
R122
R120
R123
R131
R117
R128
R129
R130
R100
R101
R115
R109
R107
R137
TP13
TP14
R106
C107
C105
R135
R151
R153
R154
R152
C136
C125
C135
R156
C121
C123
C127
R114
R127
C130
C131
C152
C156
C162
C155
C151
R136
TP12
R147
R140
R142
C125
C145
R143
R144
C163
R145
C165
C166
C167
C168
C169
C170
C171
C172
L100
R148
R150
R116
R118
R119
R155
R157
R158
R159
R160
R161
R162
R163
R164
R165
R166
R167
R168
R169
R170
R171
R172
R173
R174
R175
R176
R177
R178
R179
R180
R181
R182
R183
R184
R185
R186
R187
R188
R189
R190
R191
R192
R193
R194
R195
R196

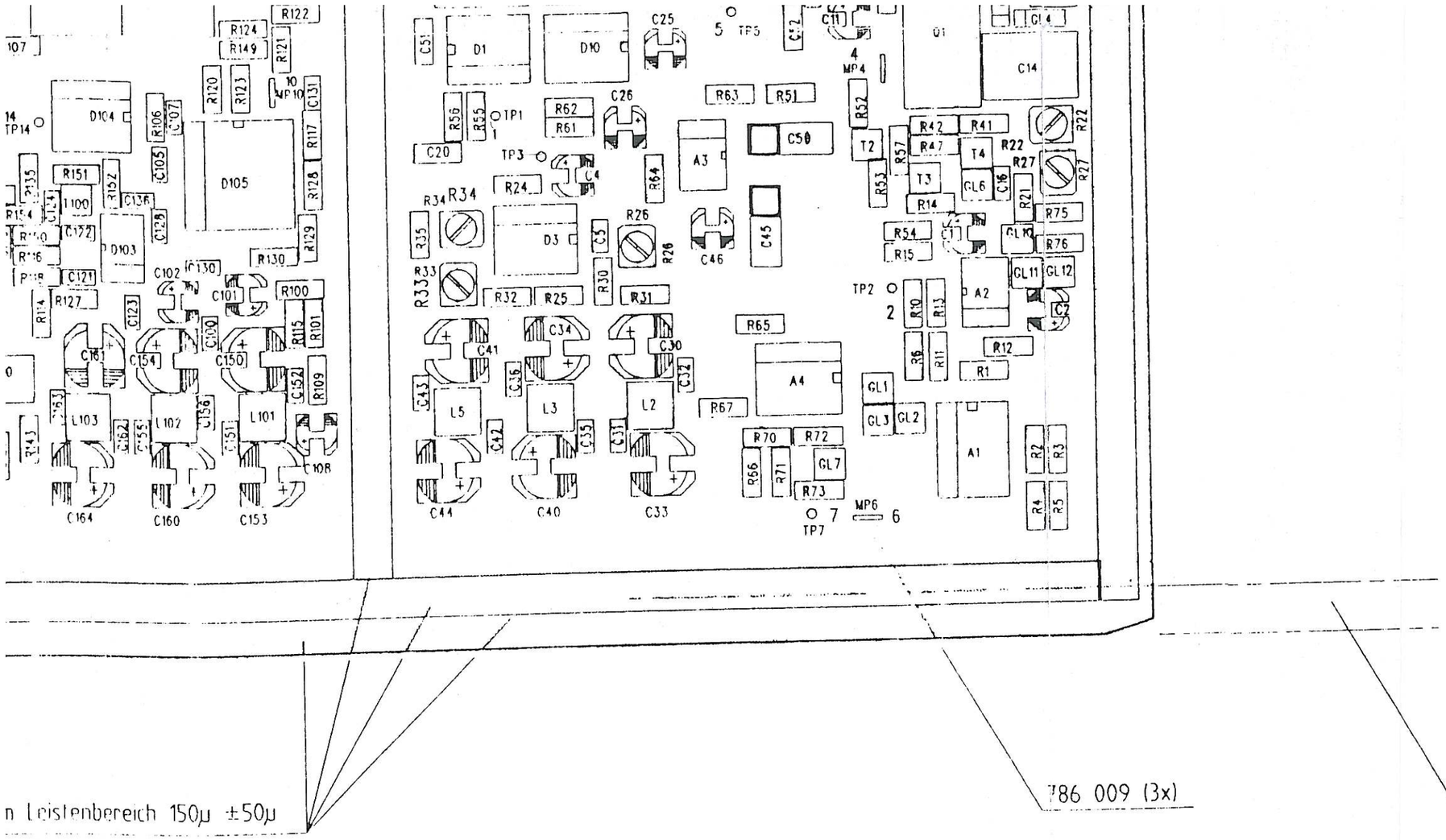

n Leistenbereich 150µ ±50µ

786 009 (3x)

Beide Randstreifen frei von lötbedingtem Zinnauftrag.

= Kontrollmaß
Critical measurements

Schaltplanpositionierung = 361 531 S / Sa

Rev. No.	Rev. Sht.	Date	Name
09			
08			
07			
06	6089 9	8.06.94	Wi.
05	3089 7	27.7.93	Kr.
04			
03			
02			
01			
00			

Rohteil / Initial part

Werkstoff / Material

Oberfläche / Surface

Freimaß toleranzen / default tolerance

Scale 2:1

DIN A1

	1993	Date	Name
Drawn		27.7.93	Kr.
Designed			
Checked			

Schlumberger Technologies GmbH
Gutenbergstr. 2 4
85737 Ismaning

Bezeichnung / Description
Bestückte Leiterplatte
Type SYNTHESIS

Zeichnungsnr. / Drawing No.
361 531

Gerät / Unit 4015 / 375 331

This drawing is the property of SCHLUMBERGER. Reproduction, unauthorized use, communication to a third party is liable to prosecution and liable for damages.

Diese Zeichnung ist unser Eigentum. Vervielfältigung, unbefugte Verwertung, Mitteilung an andere ist strafbar und schadenersatzpflichtig.

DIVIDER :4

+5V/C1

20MHZ

20 MHZ TTL

C200 100N

C201 100U

L200 100U

+5V

D200A
PC74HCT74T

D200B
PC74HCT74T

TP30

5 MHZ TTL 2

AMPLIFIER

L201 22U

C202 100U

C203 100N

C204 100U

C205 100N

T200
BFQ19

R200 100

R201 100

R202 100

R203 100

C206 100N

L202 10N

STEP RECOVERY MULTIPLIER

+5V/C

R204 220

C207 100U

C210 100N

L203 180N

GL200
MA44669-287

C211 4.7

TP35

L204 390048

GN 3 4 GN

RT 1 2 RT

R205 47

R206 47

C212 4.7

C213 4.7

TP36

SAMPLING DETECTOR

R209 10K

R210 15K

TOP VIEW
OF HSMS-2818

GL201
HSMS-2818

R211 47

R212 22K

R213 470

C214 8.2

TOP VIEW
OF MSA-0311

4 3 RED POINT

1 2

BUFFER

C225 1N

R225 150

+15V/C

C226 1N

R224 150

A201
MSA-0311

RF OUT2 1

490 990 MHZ

/A 20DBM

C224 1N

C230 1N

490 990 MHZ

C234 1N

+5V/C

C244 100N

R244 1K

T204
BC860B

R245 4.7K

TP31

TP32

C247 1N

R242 1K

C243 1N

R243 10K

T203
BC850B

10 MHZ TTL

C235 1N

C236 1N

D201
MB1501PF

VP VCC

FC PR

OSCI PP

OSCO FP

FIN FR

DATA DO

CK LD

LE GND

BUFFER

C231 1N

R232 2.7K

R233 150

R237 330

C237 1N

C238 1N

R235 100

C232 1N

T202
BFR93A

R234 82

R236 82

R240 680

R241 10

C233 6.8

C240 1N

+5V/C

D202
MB1501PF

C241 1N

TP33

TP34

C248 1N

R246 1K

C246 1N

R250 10K

T205
BC850B

C245 100N

R251 1K

T206
BC860B

R252 4.7K

R238 56

C242 1N

ENABLE-1

C227 100

CLOCK

DATA

ENABLE-2

C228 100

C229 100

C239 100

OUT OF LOCK DETECTOR

SELFCHECK

D203C
PC74HCT00T

D203D
PC74HCT00T

GL205

BAS16

D203B
PC74HCT00T

C249 10N

R247 470K

R260 1K

GL20
LSS2

+5V/C

D203A
PC74HCT00T

09	4089.17	02.12.94	VARGA	DESIGNED		
08	4089.9	30.05.94	Bau	CHECKED		
07	3089.7	17.05.93	VARGA	DRAWN	21.8.89	FLE
INDEX ISS.	Ä-NR MODIF.	DATUM DATE	NAME NAME		DATUM DATE	NAME NAME

9 8 7 6 5 4

DIESE ZEICHNUNG IST

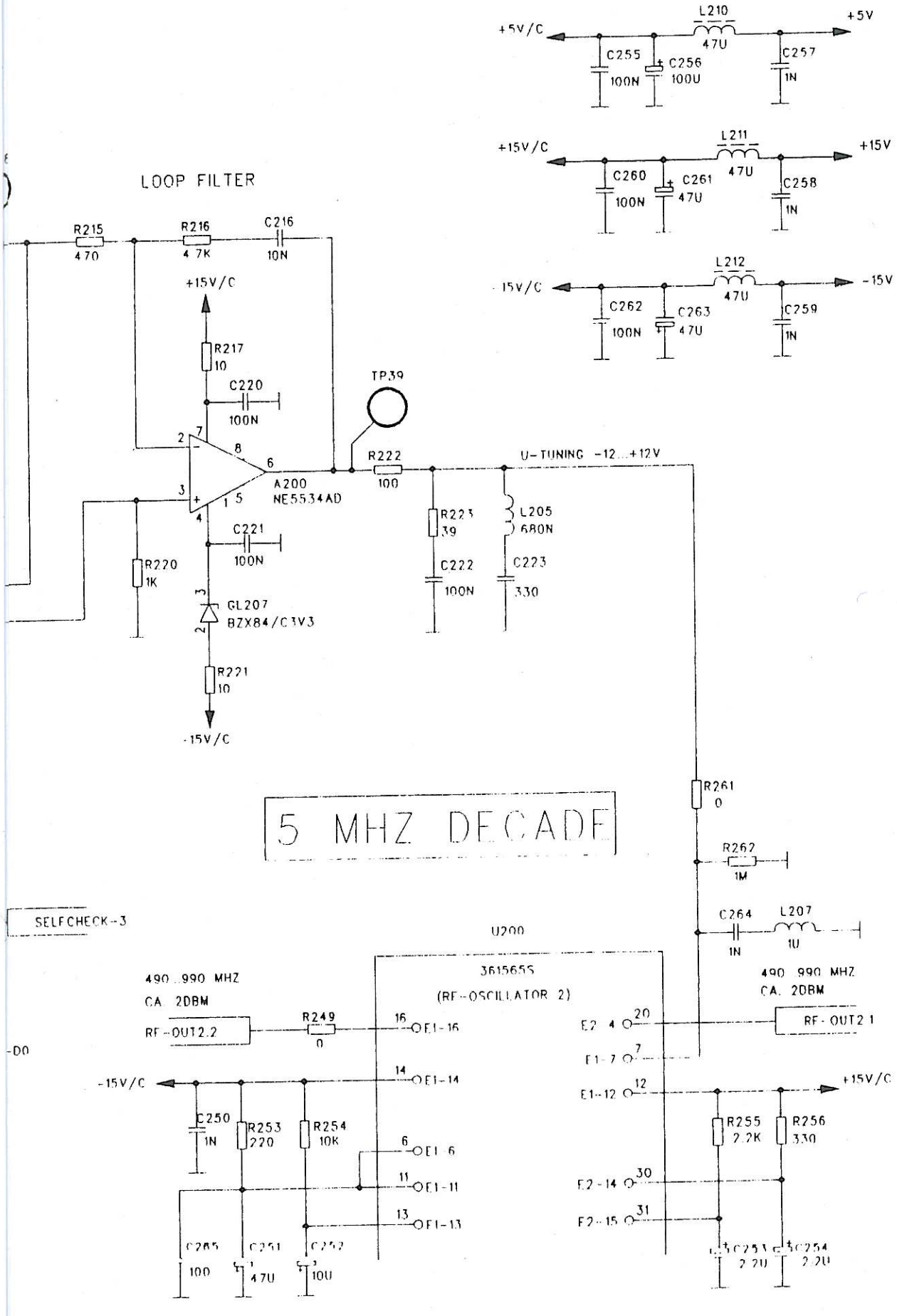

WAVETEK WIRELESS COMMUNICATIONS DIVISION Gutenbergstr. 2-4 85737 ISMANING	BEZEICHNUNG/DESCRIPTION: SYNTHESIS	ZEICHNUNGSNR./DRAWING NO: 361 531 S	3 VON/OF 6
		PROJECT/GROUP: 4015 / 213 038	BLATT SHEET

This drawing is the property of WAVETEK. Reproduction, unauthorized use, communikation to a third party is liable to prosection and liable for damages

ER EIGENTUM VERVIELFALTIGUNG, UNBEFUGTE VERWERTUNG, MITTEILUNG AN ANDERE IST STRAFBAR UND SCHADENERSATZPFLICHTIG.

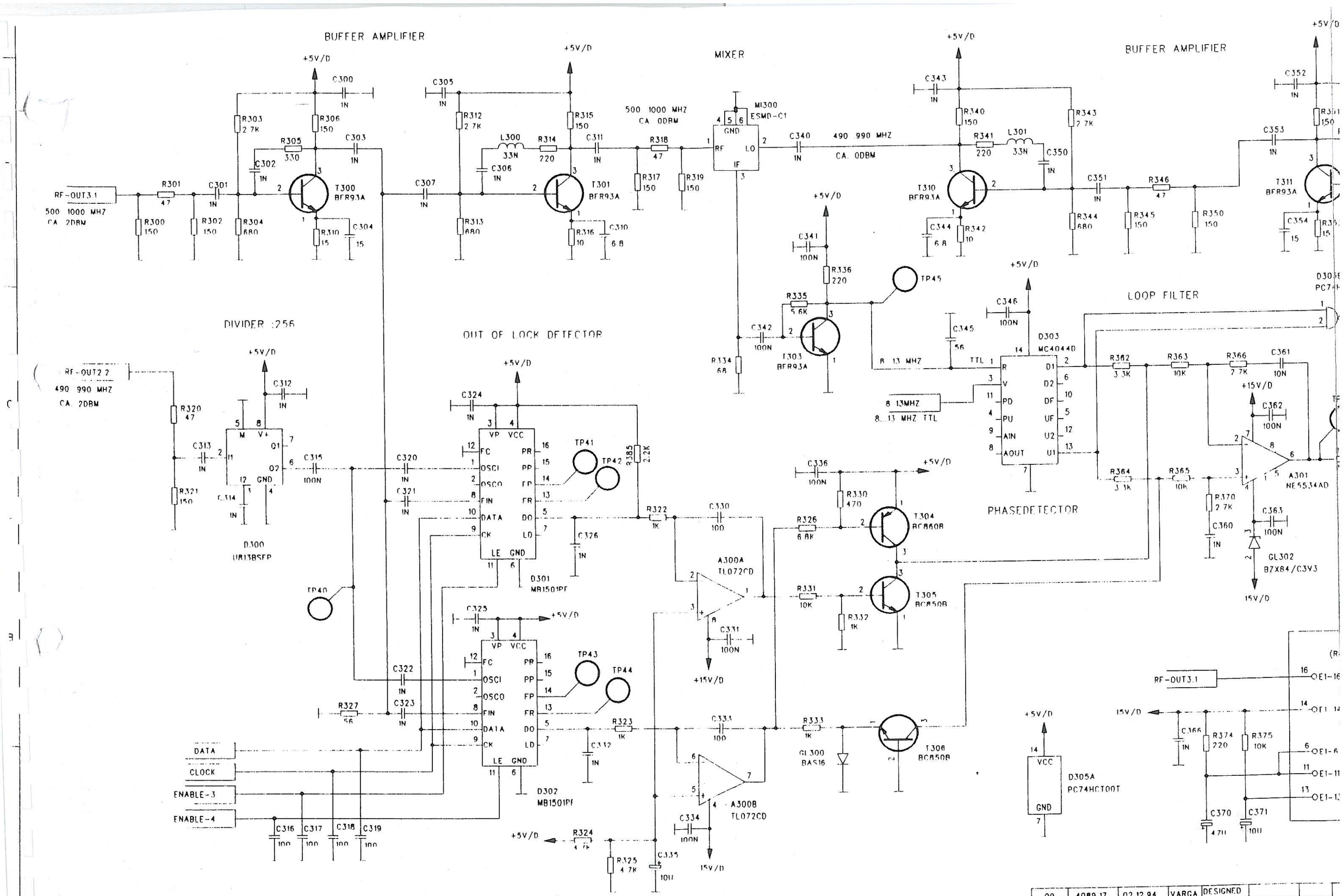

09	4089.17	02.12.94	VARGA	DESIGNED		
08	4089.9	30.05.94	Bau	CHECKED		
07	3089.7	17.05.93	VARGA	DRAWN	21.8.89	FLE
INDEX ISS.	A.-NR. MODIF.	DATUM DATE	NAME NAME		DATUM DATE	NAME NAME

DIESE ZEICHNUNG IST

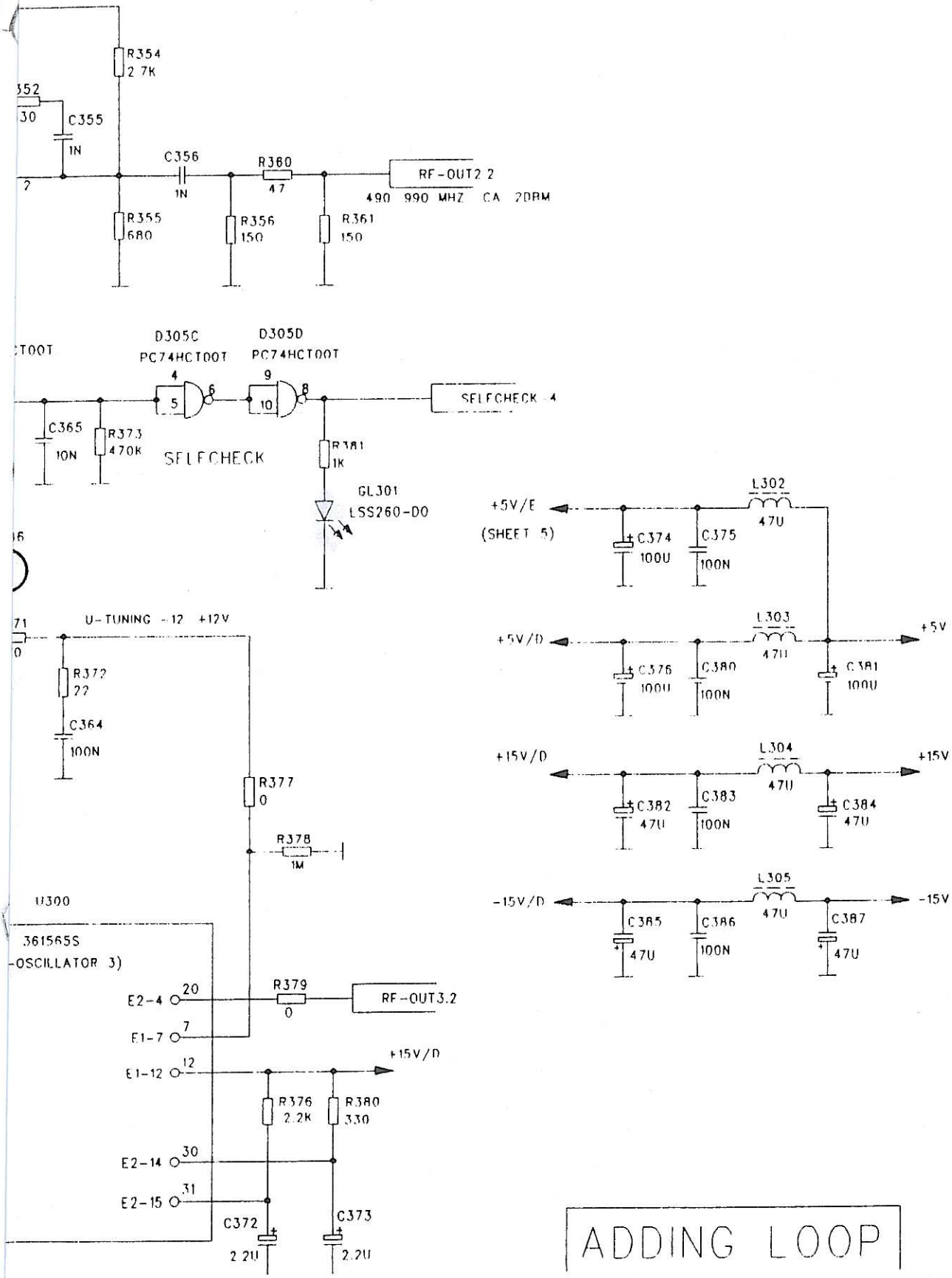

ADDING LOOP

WAVETEK WIRELESS COMMUNICATIONS DIVISION Gutenbergstr. 2-4 85737 ISMANING	BEZEICHNUNG/DESCRIPTION: SYNTHESIS	ZEICHNUNGSNR./DRAWING NO.: 361 531 S	4 VON/OF 6
		PROJECT/GROUP: 4015 / 213 038	BLATT SHEET

UNSER EIGENTUM. VERVIELFALTIGUNG, UNBEFUGTE VERWERTUNG, MITTEILUNG AN ANDERE IST STRAFBAR UND SCHADENERSATZPFLICHTIG.

This drawing is the property of WAVETEK. Reproduction, unauthorized use, communication to a third party is liable to prosecution and liable for damages.

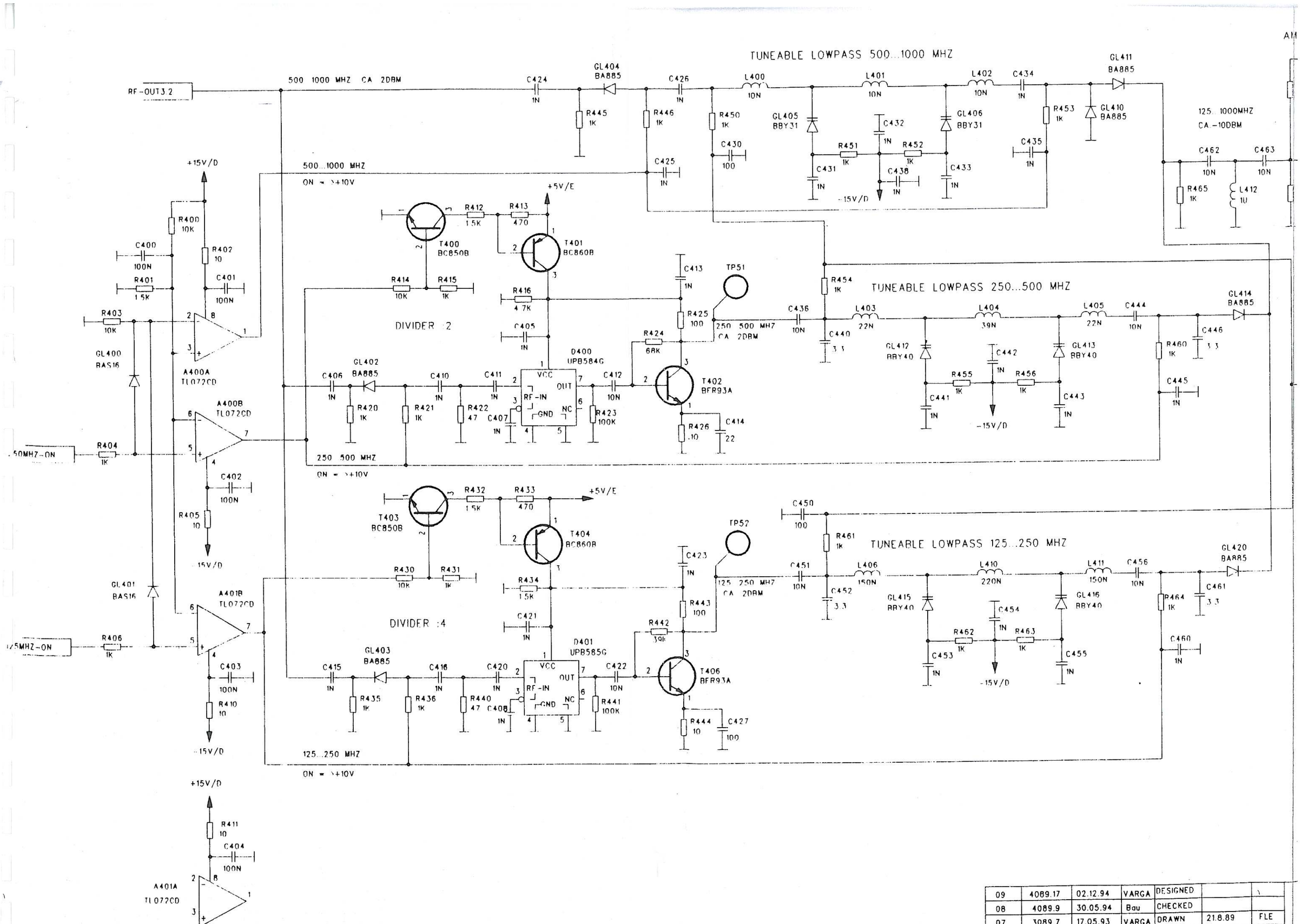

09	4089.17	02.12.94	VARGA	DESIGNED		
08	4089.9	30.05.94	Bau	CHECKED		
07	3089.7	17.05.93	VARGA	DRAWN	21.8.89	FLE
INDEX ISS.	Ä.-NR. MODIF.	DATUM DATE	NAME NAME		DATUM DATE	NAME NAME

9 | 8 | 7 | 6 | 5 | 4 DIESE ZEICHNUNG IST U

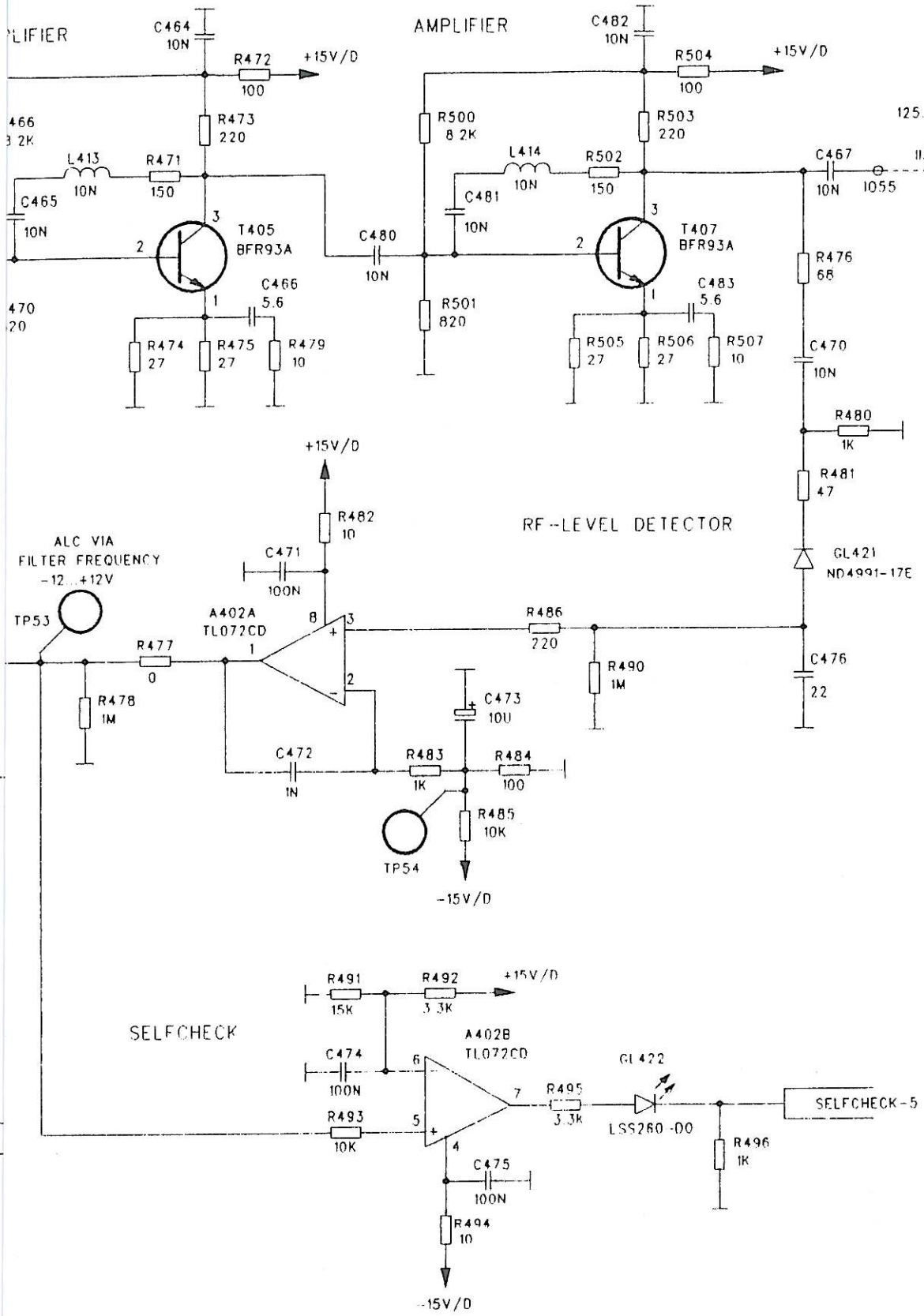

OUTPUT FILTER

WAVETEK WIRELESS COMMUNICATIONS DIVISION Gutenbergstr. 2-4 85737 ISMANING	BEZEICHNUNG/DESCRIPTION: SYNTHESIS	ZEICHNUNGSNR /DRAWING NO 361 531 S	5 VON/OF 6
		PROJECT/GROUP: 4015 / 213 038	BLATT SHEET

This drawing is the property of WAVETEK. Reproduction, unauthorized use, communikation to a third party is liable to prosection and liable for damages.

SER EIGENTUM. VERVIELFÄLTIGUNG, UNBEFUGTE VERWERTUNG, MITTEILUNG AN ANDERE IST STRAFBAR UND SCHADENERSATZPFLICHTIG.

CONTROL UNIT

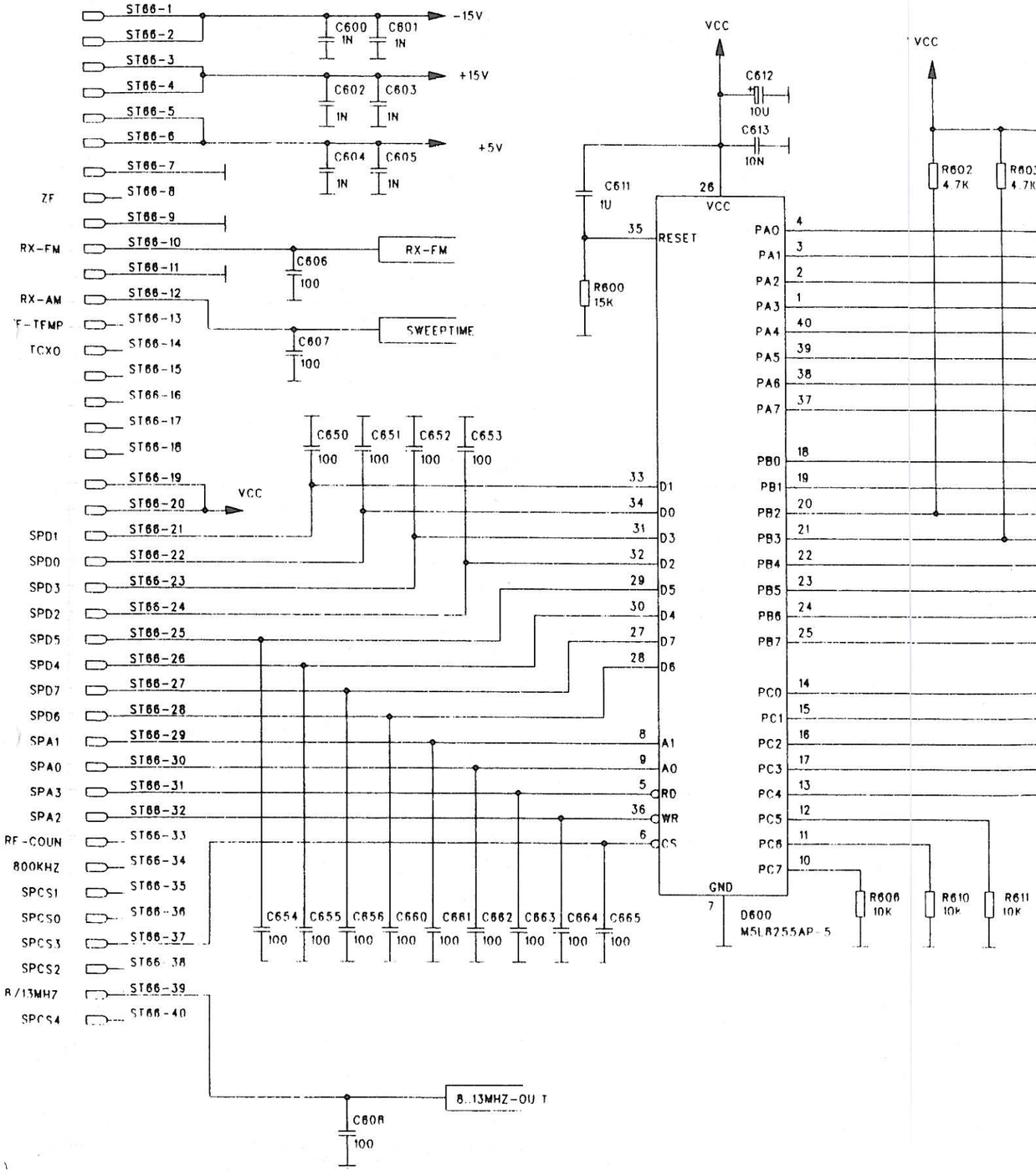

INDEX ISS.	A.-NR. MODIF.	DATUM DATE	NAME NAME		DATUM DATE	NAME NAME
09	4089.17	02.12.94	VARGA	DESIGNED		
08	4089.9	30.05.94	Bau	CHECKED		
07	3089.7	17.05.93	VARGA	DRAWN	21.6.89	FLE

DIESE ZEICHNUNG IST

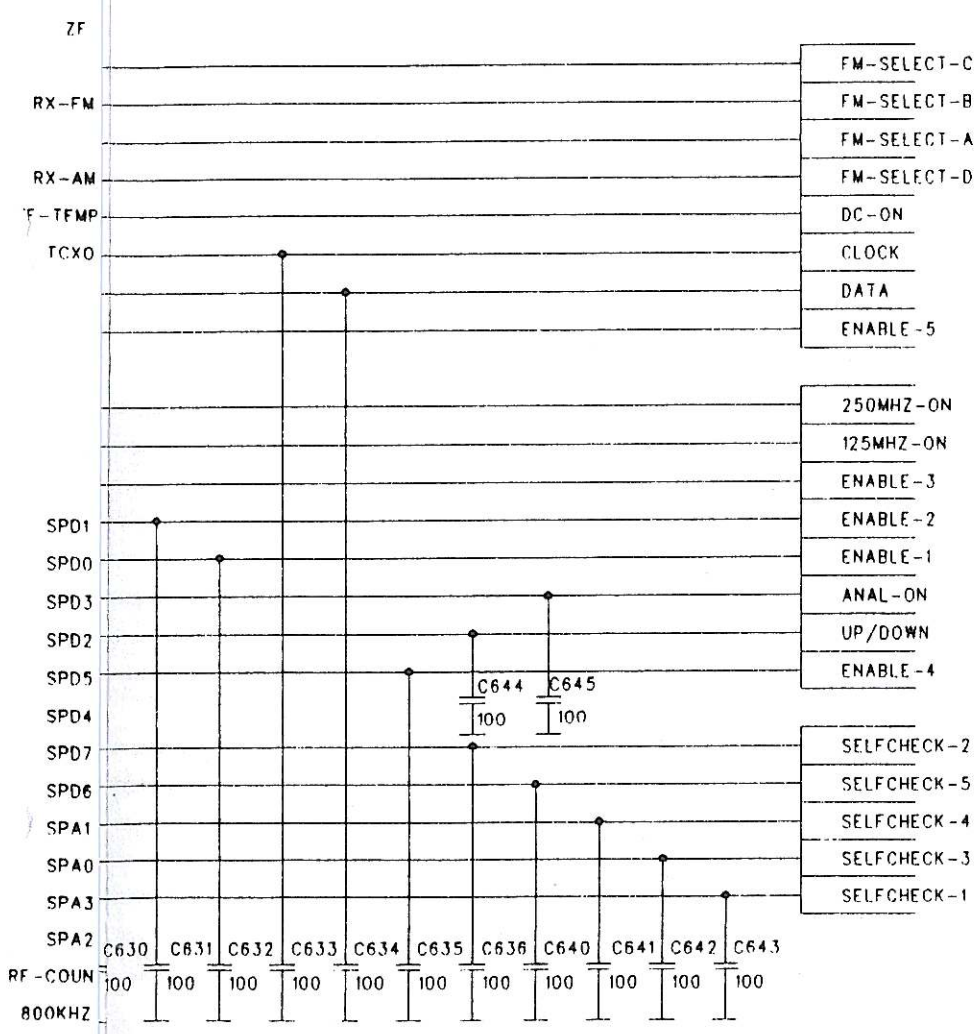

CONTROL UNIT

WAVETEK WIRELESS COMMUNICATIONS DIVISION Gutenbergstr. 2-4 85737 ISMANING	BEZEICHNUNG/DESCRIPTION: SYNTHESIS	ZEICHNUNGSNR./DRAWING NO.: 361 531 S	6 VON/OF 6
		PROJECT/GROUP: 4015 / 213 038	BLATT SHEET

D

This drawing is the property of WAVETEK. Reproduction, unauthorized use, communikation to a third party is liable to prosection and liable for damages.

NSER EIGENTUM. VERVIELFALTIGUNG, UNBEFUGTE VERWERTUNG, MITTEILUNG AN ANDERE IST STRAFBAR UND SCHADENERSATZPFLICHTIG.

RX-FM

MP6

AF-AMPLIFIER

C53* 100

R1 39K

R2 39K

R3 47K

R4 15K

R5 3.9K

R6 15K

R10 10K

HEF4053BT A1C

HEF4053BT A1B

R11 10K

+15V/A

R13 100K

R14 100

C1 10U

A2 AD711KR

GL1 BZX84/C8V2

GL2 BAS70-04

GL3 BZX84/C8V2

A1A HEF4053BT

R12 15K

C2 10U

R15 100

-15V/A

GL10 BAV99

GL11 BAV99

GL12 BAV99

TP2

R21 1.5K

R27 2K

R22 1K

R75 6.8K

R76 27K

R43 47K

C54* 100

C55* 100

C56* 100

C57* 100

FM-SELECT-B

FM-SELECT-C

FM-SELECT-A

FM-SELECT-D

20MHZ OUTPUT

I18

BU49

BU47

I19

20 MHZ TTL

20MHZ INPUT

I09

C20 100N

R56 4.7K

R55 4.7K

D1B PC74HCT00T

TP1

DIVIDER :100

D4A PC74HCT390T

C24 100N

D4B PC74HCT390T

MODULATOR

CRYSTAL OSCILLATOR

U/OSZ

C11 10U

C12 1N

R36 10K

R45 470

Q1 20.0MHZ

T1 BFR93A

C6 100

C10 100

R40 10K

R44 4.7K

R23 3.3K

C3 1N

GL4 BB620

GL5 BB620

R41 4.7K

C14 47N

R42 4.7K

BUFFER

R50 47K

TP5

D2F PC74HCT04T

C13 1N

R46 1K

D2B PC74HCT04T

D2G PC74HCT04T

D2E PC74HCT04T

D2C PC74HCT04T

D2D PC74HCT04T

20MHZ

DIVIDER :100

D6A PC74HCT390T

C25 10U

D6B PC74HCT390T

MP4

R47 0

DC-FM ON/OFF SWITCH

T4 MMBF4860

GL6 BAS16

C16 1N

T3 BC860B

T2 BC850B

R53 10K

R57 10K

R54 10K

R52 10K

-15V/A

+15V/A

D3 LM723CM

R24 4.7K

C4 10U

C5 100

R25 10K

R26 2K

R30 15K

R31 1K

R32 4.7k

R33 1K

R34 20K

R35 5.6k

TP3

U/OSZ

VOLTAGE STABILIZATION

R65 47K

R67 22K

R66 10K

R70 2.2K

R71 1K

A4A LM319D

A4B LM319D

R72 3.3K

SELFCHECK

GL7 LSS260-D0

TP7

R73 1K

C60* 100

SELFCHECK-1

L=OK

361 531
461 531 07

* THIS CAPACITOR IS LOCATED IN THE FINEDECADE

INDEX ISS.	Ä.-NR. MODIF.	DATUM DATE	NAME NAME		DATUM DATE	NAME NAME
09	4089.17	01.12.94	VARGA	DESIGNED		
08	4089.9	30.05.94	Bau	CHECKED		
07	3089.7	17.05.93	VARGA	DRAWN	21.8.89	FLE

9 8 7 6 5 4 DIESE ZEICHNUNG IST

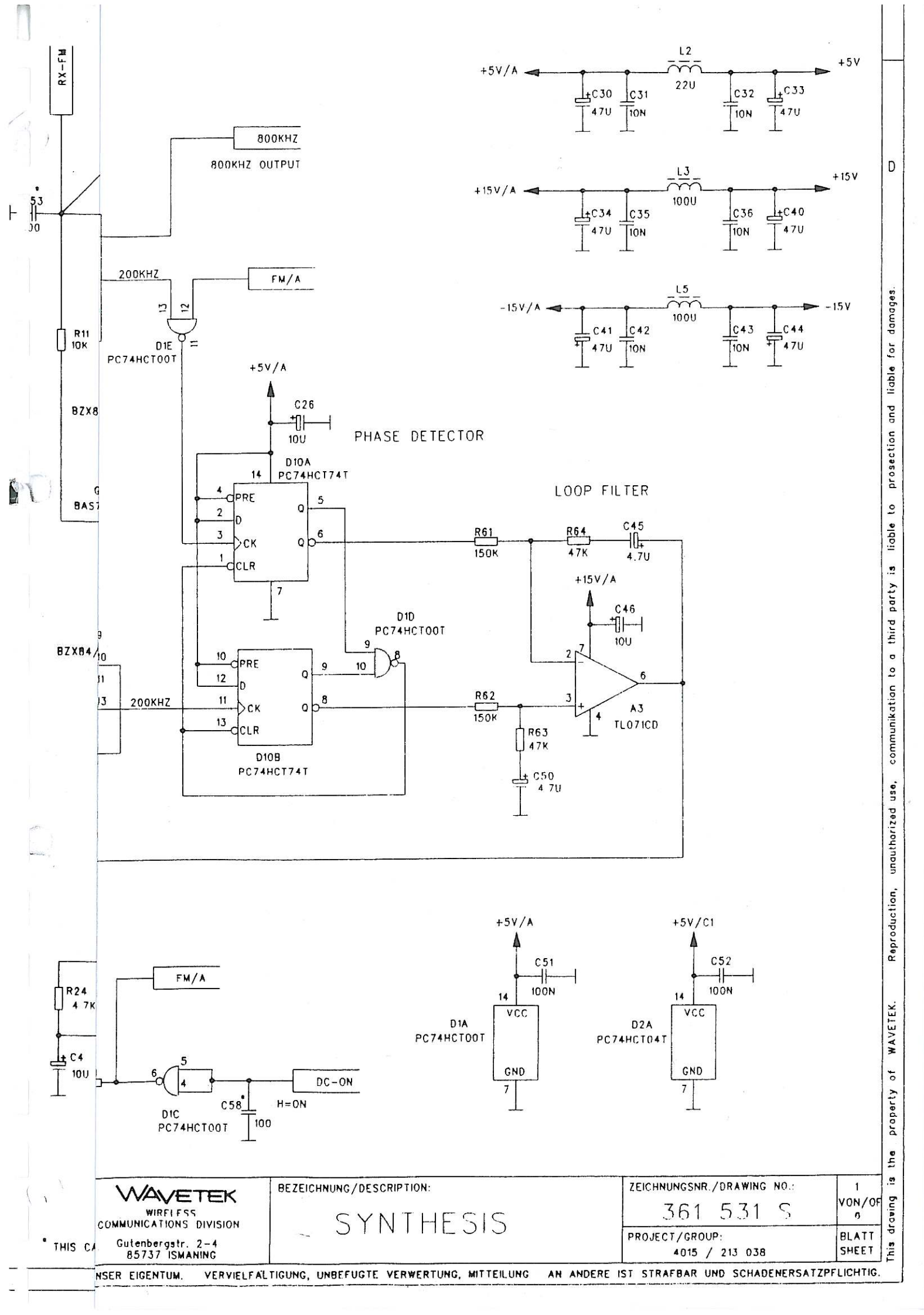

WAVETEK WIRELESS COMMUNICATIONS DIVISION Gutenbergstr. 2-4 85737 ISMANING	BEZEICHNUNG/DESCRIPTION: SYNTHESIS	ZEICHNUNGSNR./DRAWING NO.: 361 531 S	1 VON/OF 6
		PROJECT/GROUP: 4015 / 213 038	BLATT SHEET

This drawing is the property of WAVETEK. Reproduction, unauthorized use, communikation to a third party is liable to prosection and liable for damages.

NSER EIGENTUM. VERVIELFÄLTIGUNG, UNBEFUGTE VERWERTUNG, MITTEILUNG AN ANDERE IST STRAFBAR UND SCHADENERSATZPFLICHTIG.

Pos.	Benennung	Wert	HNK-Nr.	Herst.
C14	MKT-Chip-Kondensator	47nF ±10% 50V-	812601	WIMA
C16	Kondensator NP0	1nF ±5% 50V-	813247	VIT
C20	Kondensator X7R	100nF ±10% 50V-	813375	VIT
C24	Kondensator X7R	100nF ±10% 50V-	813375	VIT
C25	Elko	10µF ±20% 16V-	814382	RÖD
C26	Elko	10µF ±20% 16V-	814382	RÖD
C30	Elko	47µF ±20% 16V-	814386	RÖD
C31	Kondensator X7R	10nF ±10% 50V-	813332	VIT
C32	Kondensator X7R	10nF ±10% 50V-	813332	VIT
C33	Elko	47µF ±20% 16V-	814386	RÖD
C34	Elko	47µF ±20% 16V-	814386	RÖD
C35	Kondensator X7R	10nF ±10% 50V-	813332	VIT
C36	Kondensator X7R	10nF ±10% 50V-	813332	VIT
C40	Elko	47µF ±20% 16V-	814386	RÖD
C41	Elko	47µF ±20% 16V-	814386	RÖD
C42	Kondensator X7R	10nF ±10% 50V-	813332	VIT
C43	Kondensator X7R	10nF ±10% 50V-	813332	VIT
C44	Elko	47µF ±20% 16V-	814386	RÖD
C45	Tantalkondensator	4.7µF ±20% 20V-	814510	NEC
C46	Elko	10µF ±20% 16V-	814382	RÖD
C50	Tantalkondensator	4.7µF ±20% 20V-	814510	NEC
C51	Kondensator X7R	100nF ±10% 50V-	813375	VIT
C52	Kondensator X7R	100nF ±10% 50V-	813375	VIT
C53	Kondensator NP0	100pF ±5% 50V-	813235	VIT
C54	Kondensator NP0	100pF ±5% 50V-	813235	VIT
C55	Kondensator NP0	100pF ±5% 50V-	813235	VIT
C56	Kondensator NP0	100pF ±5% 50V-	813235	VIT
C57	Kondensator NP0	100pF ±5% 50V-	813235	VIT
C58	Kondensator NP0	100pF ±5% 50V-	813235	VIT

Pos.	Benennung	Wert	HNK-Nr.	Herst.
C60	Kondensator NP0	100pF ±5% 50V-	813235	VIT
C100	Kondensator NP0	1nF ±5% 50V-	813247	VIT
C101	Elko	10µF ±20% 16V-	814382	RÖD
C102	Elko	10µF ±20% 16V-	814382	RÖD
C103	Elko	2.2µF ±20% 50V-	814362	RÖD
C104	Elko	2.2µF ±20% 50V-	814362	RÖD
C105	Kondensator NP0	1nF ±5% 50V-	813247	VIT
C106	Kondensator NP0	1nF ±5% 50V-	813247	VIT
C107	Kondensator NP0	1nF ±5% 50V-	813247	VIT
C108	Elko	2.2µF ±20% 50V-	814362	RÖD
C109	Kondensator NP0	1nF ±5% 50V-	813247	VIT
C110	Kondensator NP0	1nF ±5% 50V-	813247	VIT
C111	Kondensator NP0	1nF ±5% 50V-	813247	VIT
C112	Kondensator NP0	1nF ±5% 50V-	813247	VIT
C113	Kondensator NP0	1nF ±5% 50V-	813247	VIT
C115	Kondensator X7R	100nF ±10% 50V-	813375	VIT
C116	Kondensator NP0	100pF ±5% 50V-	813235	VIT
C117	Kondensator NP0	100pF ±5% 50V-	813235	VIT
C118	Kondensator NP0	1nF ±5% 50V-	813247	VIT
C120	Kondensator NP0	100pF ±5% 50V-	813235	VIT
C121	Kondensator NP0	1nF ±5% 50V-	813247	VIT
C122	Kondensator NP0	1nF ±5% 50V-	813247	VIT
C123	Kondensator NP0	1nF ±5% 50V-	813247	VIT
C124	Kondensator NP0	100pF ±5% 50V-	813235	VIT
C126	Kondensator X7R	100nF ±10% 50V-	813375	VIT
C128	Kondensator NP0	1nF ±5% 50V-	813247	VIT
C130	Kondensator X7R	10nF ±10% 50V-	813332	VIT
C131	Kondensator NP0	470pF ±5% 50V-	813243	VIT
C132	Elko	10µF ±20% 16V-	814382	RÖD

Pos.	Benennung	Wert	HNK-Nr.	Herst.
C133	MKT-Chip-Kondensator	470nF ±10% 50V-	812628	WIMA
C134	MKT-Chip-Kondensator	470nF ±10% 50V-	812628	WIMA
C135	MKT-Chip-Kondensator	470nF ±10% 50V-	812628	WIMA
C136	Kondensator X7R	10nF ±10% 50V-	813332	VIT
C140	Kondensator NP0	100pF ±5% 50V-	813235	VIT
C141	Kondensator NP0	100pF ±5% 50V-	813235	VIT
C142	Kondensator NP0	1nF ±5% 50V-	813247	VIT
C143	Kondensator X7R	100nF ±10% 50V-	813375	VIT
C144	Kondensator X7R	100nF ±10% 50V-	813375	VIT
C150	Elko	47µF ±20% 16V-	814386	RÖD
C151	Kondensator X7R	10nF ±10% 50V-	813332	VIT
C152	Kondensator X7R	10nF ±10% 50V-	813332	VIT
C153	Elko	47µF ±20% 16V-	814386	RÖD
C154	Elko	47µF ±20% 16V-	814386	RÖD
C155	Kondensator X7R	10nF ±10% 50V-	813332	VIT
C156	Kondensator X7R	10nF ±10% 50V-	813332	VIT
C160	Elko	47µF ±20% 16V-	814386	RÖD
C161	Elko	47µF ±20% 16V-	814386	RÖD
C162	Kondensator X7R	10nF ±10% 50V-	813332	VIT
C163	Kondensator X7R	10nF ±10% 50V-	813332	VIT
C164	Elko	47µF ±20% 16V-	814386	RÖD
C170	Kondensator NP0	100pF ±5% 50V-	813235	VIT
C171	Kondensator NP0	100pF ±5% 50V-	813235	VIT
C172	Kondensator NP0	100pF ±5% 50V-	813235	VIT
C173	Kondensator NP0	100pF ±5% 50V-	813235	VIT
C174	Kondensator NP0	68pF ±5% 50V-	813233	VIT
C175	Kondensator NP0	100pF ±5% 50V-	813235	VIT
C176	Kondensator NP0	100pF ±5% 50V-	813235	VIT
C177	Kondensator NP0	100pF ±5% 50V-	813235	VIT

Pos.	Benennung	Wert	HNK-Nr.	Herst.
C178	Kondensator NP0	68pF ±5% 50V-	813233	VIT
C180	Kondensator NP0	100pF ±5% 50V-	813235	VIT
C181	Kondensator NP0	100pF ±5% 50V-	813235	VIT
C200	Kondensator X7R	100nF ±10% 50V-	813375	VIT
C201	Elko	100µF ±20% 6.3V	814394	RÖD
C202	Elko	100µF ±20% 6.3V	814394	RÖD
C203	Kondensator X7R	100nF ±10% 50V-	813375	VIT
C204	Elko	100µF ±20% 6.3V	814394	RÖD
C205	Kondensator X7R	100nF ±10% 50V-	813375	VIT
C206	Kondensator X7R	100nF ±10% 50V-	813375	VIT
C207	Elko	100µF ±20% 6.3V	814394	RÖD
C210	Kondensator X7R	100nF ±10% 50V-	813375	VIT
C211	Kondensator NP0	47pF ±5% 50V-	813231	VIT
C212	Kondensator NP0	4.7pF ±0.25pF	813219	VIT
C213	Kondensator NP0	4.7pF ±0.25pF	813219	VIT
C214	Kondensator NP0	8.2pF ±0.5pF	813222	VIT
C216	Kondensator X7R	10nF ±10% 50V-	813332	VIT
C220	Kondensator X7R	100nF ±10% 50V-	813375	VIT
C221	Kondensator X7R	100nF ±10% 50V-	813375	VIT
C222	Kondensator X7R	100nF ±10% 50V-	813375	VIT
C223	Kondensator NP0	330pF ±5% 50V-	813241	VIT
C224	Kondensator NP0	1nF ±5% 50V-	813247	VIT
C225	Kondensator NP0	1nF ±5% 50V-	813247	VIT
C226	Kondensator NP0	1nF ±5% 50V-	813247	VIT
C227	Kondensator NP0	100pF ±5% 50V-	813235	VIT
C228	Kondensator NP0	100pF ±5% 50V-	813235	VIT
C229	Kondensator NP0	100pF ±5% 50V-	813235	VIT
C230	Kondensator NP0	1nF ±5% 50V-	813247	VIT
C231	Kondensator NP0	1nF ±5% 50V-	813247	VIT

WAVETEK Wireless Communications				Schaltteilliste	Anz. d. Seiten
11 Index	4089.17 Ä.Nr.	6.12.1994 Datum	VARGA Name	Bestückte Leiterplatte Typ: SYNTHESIS	28
Erst.: VARGA		Gepr.:		361 531 Sa	Seite Nr
Gerät: 4015 / 231 038 / 375 331					5

Pos.	Benennung	Wert	HNK-Nr.	Herst.
C232	Kondensator NP0	1nF ±5% 50V-	813247	VIT
C233	Kondensator NP0	6.8pF ±0.5pF	813221	VIT
C234	Kondensator NP0	1nF ±5% 50V-	813247	VIT
C235	Kondensator NP0	1nF ±5% 50V-	813247	VIT
C236	Kondensator NP0	1nF ±5% 50V-	813247	VIT
C237	Kondensator NP0	1nF ±5% 50V-	813247	VIT
C238	Kondensator NP0	1nF ±5% 50V-	813247	VIT
C239	Kondensator NP0	100pF ±5% 50V-	813235	VIT
C240	Kondensator NP0	1nF ±5% 50V-	813247	VIT
C241	Kondensator NP0	1nF ±5% 50V-	813247	VIT
C242	Kondensator NP0	1nF ±5% 50V-	813247	VIT
C243	Kondensator NP0	1nF ±5% 50V-	813247	VIT
C244	Kondensator X7R	100nF ±10% 50V-	813375	VIT
C245	Kondensator X7R	100nF ±10% 50V-	813375	VIT
C246	Kondensator NP0	1nF ±5% 50V-	813247	VIT
C247	Kondensator NP0	1nF ±5% 50V-	813247	VIT
C248	Kondensator NP0	1nF ±5% 50V-	813247	VIT
C249	Kondensator X7R	10nF ±10% 50V-	813332	VIT
C250	Kondensator NP0	1nF ±5% 50V-	813247	VIT
C251	Elko	47µF ±20% 16V-	814386	RÖD
C252	Elko	10µF ±20% 16V-	814382	RÖD
C253	Elko	2.2µF ±20% 50V-	814362	RÖD
C254	Elko	2.2µF ±20% 50V-	814362	RÖD
C255	Kondensator X7R	100nF ±10% 50V-	813375	VIT
C256	Elko	100µF ±20% 6.3V	814394	RÖD
C257	Kondensator NP0	1nF ±5% 50V-	813247	VIT
C258	Kondensator NP0	1nF ±5% 50V-	813247	VIT
C259	Kondensator NP0	1nF ±5% 50V-	813247	VIT
C260	Kondensator X7R	100nF ±10% 50V-	813375	VIT

Pos.	Benennung	Wert	HNK-Nr.	Herst.
C261	Elko	47µF ±20% 16V-	814386	RÖD
C262	Kondensator X7R	100nF ±10% 50V-	813375	VIT
C263	Elko	47µF ±20% 16V-	814386	RÖD
C264	Kondensator NP0	1nF ±5% 50V-	813247	VIT
C265	Kondensator NP0	100pF ±5% 50V-	813235	VIT
C300	Kondensator NP0	1nF ±5% 50V-	813247	VIT
C301	Kondensator NP0	1nF ±5% 50V-	813247	VIT
C302	Kondensator NP0	1nF ±5% 50V-	813247	VIT
C303	Kondensator NP0	1nF ±5% 50V-	813247	VIT
C304	Kondensator NP0	15pF ±5% 50V-	813225	VIT
C305	Kondensator NP0	1nF ±5% 50V-	813247	VIT
C306	Kondensator NP0	1nF ±5% 50V-	813247	VIT
C307	Kondensator NP0	1nF ±5% 50V-	813247	VIT
C310	Kondensator NP0	6.8pF ±0.5pF	813221	VIT
C311	Kondensator NP0	1nF ±5% 50V-	813247	VIT
C312	Kondensator NP0	1nF ±5% 50V-	813247	VIT
C313	Kondensator NP0	1nF ±5% 50V-	813247	VIT
C314	Kondensator NP0	1nF ±5% 50V-	813247	VIT
C315	Kondensator X7R	100nF ±10% 50V-	813375	VIT
C316	Kondensator NP0	100pF ±5% 50V-	813235	VIT
C317	Kondensator NP0	100pF ±5% 50V-	813235	VIT
C318	Kondensator NP0	100pF ±5% 50V-	813235	VIT
C319	Kondensator NP0	100pF ±5% 50V-	813235	VIT
C320	Kondensator NP0	1nF ±5% 50V-	813247	VIT
C321	Kondensator NP0	1nF ±5% 50V-	813247	VIT
C322	Kondensator NP0	1nF ±5% 50V-	813247	VIT
C323	Kondensator NP0	1nF ±5% 50V-	813247	VIT
C324	Kondensator NP0	1nF ±5% 50V-	813247	VIT
C325	Kondensator NP0	1nF ±5% 50V-	813247	VIT

Pos.	Benennung	Wert	HNK-Nr.	Herst.
C326	Kondensator NP0	1nF ±5% 50V-	813247	VIT
C330	Kondensator NP0	100pF ±5% 50V-	813235	VIT
C331	Kondensator X7R	100nF ±10% 50V-	813375	VIT
C332	Kondensator NP0	1nF ±5% 50V-	813247	VIT
C333	Kondensator NP0	100pF ±5% 50V-	813235	VIT
C334	Kondensator X7R	100nF ±10% 50V-	813375	VIT
C335	Elko	10µF ±20% 16V-	814382	RÖD
C336	Kondensator X7R	100nF ±10% 50V-	813375	VIT
C340	Kondensator NP0	1nF ±5% 50V-	813247	VIT
C341	Kondensator X7R	100nF ±10% 50V-	813375	VIT
C342	Kondensator X7R	100nF ±10% 50V-	813375	VIT
C343	Kondensator NP0	1nF ±5% 50V-	813247	VIT
C344	Kondensator NP0	6.8pF ±0.5pF	813221	VIT
C345	Kondensator NP0	56pF ±5% 50V-	813232	VIT
C346	Kondensator X7R	100nF ±10% 50V-	813375	VIT
C350	Kondensator NP0	1nF ±5% 50V-	813247	VIT
C351	Kondensator NP0	1nF ±5% 50V-	813247	VIT
C352	Kondensator NP0	1nF ±5% 50V-	813247	VIT
C353	Kondensator NP0	1nF ±5% 50V-	813247	VIT
C354	Kondensator NP0	15pF ±5% 50V-	813225	VIT
C355	Kondensator NP0	1nF ±5% 50V-	813247	VIT
C356	Kondensator NP0	1nF ±5% 50V-	813247	VIT
C360	Kondensator NP0	1nF ±5% 50V-	813247	VIT
C361	Kondensator X7R	10nF ±10% 50V-	813332	VIT
C362	Kondensator X7R	100nF ±10% 50V-	813375	VIT
C363	Kondensator X7R	100nF ±10% 50V-	813375	VIT
C364	Kondensator X7R	100nF ±10% 50V-	813375	VIT
C365	Kondensator X7R	10nF ±10% 50V-	813332	VIT
C366	Kondensator NP0	1nF ±5% 50V-	813247	VIT

WAVETEK Wireless Communications				Schaltteilliste	Anz. d. Seiten
11 Index	4089.17 Ä.Nr.	6.12.1994 Datum	VARGA Name	Bestückte Leiterplatte Typ: SYNTHESIS	28
Erst.: VARGA		Gepr.:		361 531 Sa	Seite Nr
Gerät: 4015 / 231 038 / 375 331					8

Pos.	Benennung	Wert	HNK-Nr.	Herst.
C370	Elko	47µF ±20% 16V-	814386	RÖD
C371	Elko	10µF ±20% 16V-	814382	RÖD
C372	Elko	2.2µF ±20% 50V-	814362	RÖD
C373	Elko	2.2µF ±20% 50V-	814362	RÖD
C374	Elko	100µF ±20% 6.3V	814394	RÖD
C375	Kondensator X7R	100nF ±10% 50V-	813375	VIT
C376	Elko	100µF ±20% 6.3V	814394	RÖD
C380	Kondensator X7R	100nF ±10% 50V-	813375	VIT
C381	Elko	100µF ±20% 6.3V	814394	RÖD
C382	Elko	47µF ±20% 16V-	814386	RÖD
C383	Kondensator X7R	100nF ±10% 50V-	813375	VIT
C384	Elko	47µF ±20% 16V-	814386	RÖD
C385	Elko	47µF ±20% 16V-	814386	RÖD
C386	Kondensator X7R	100nF ±10% 50V-	813375	VIT
C387	Elko	47µF ±20% 16V-	814386	RÖD
C400	Kondensator X7R	100nF ±10% 50V-	813375	VIT
C401	Kondensator X7R	100nF ±10% 50V-	813375	VIT
C402	Kondensator X7R	100nF ±10% 50V-	813375	VIT
C403	Kondensator X7R	100nF ±10% 50V-	813375	VIT
C404	Kondensator X7R	100nF ±10% 50V-	813375	VIT
C405	Kondensator NP0	1nF ±5% 50V-	813247	VIT
C406	Kondensator NP0	1nF ±5% 50V-	813247	VIT
C407	Kondensator NP0	1nF ±5% 50V-	813247	VIT
C408	Kondensator NP0	1nF ±5% 50V-	813247	VIT
C410	Kondensator NP0	1nF ±5% 50V-	813247	VIT
C411	Kondensator NP0	1nF ±5% 50V-	813247	VIT
C412	Kondensator X7R	10nF ±10% 50V-	813332	VIT
C413	Kondensator NP0	1nF ±5% 50V-	813247	VIT
C414	Kondensator NP0	22pF ±5% 50V-	813227	VIT

Pos.	Benennung	Wert	HNK-Nr.	Herst.
C415	Kondensator NP0	1nF ±5% 50V-	813247	VIT
C416	Kondensator NP0	1nF ±5% 50V-	813247	VIT
C420	Kondensator NP0	1nF ±5% 50V-	813247	VIT
C421	Kondensator NP0	1nF ±5% 50V-	813247	VIT
C422	Kondensator X7R	10nF ±10% 50V-	813332	VIT
C423	Kondensator NP0	1nF ±5% 50V-	813247	VIT
C424	Kondensator NP0	1nF ±5% 50V-	813247	VIT
C425	Kondensator NP0	1nF ±5% 50V-	813247	VIT
C426	Kondensator NP0	1nF ±5% 50V-	813247	VIT
C427	Kondensator NP0	100pF ±5% 50V-	813235	VIT
C430	Kondensator NP0	100pF ±5% 50V-	813235	VIT
C431	Kondensator NP0	1nF ±5% 50V-	813247	VIT
C432	Kondensator NP0	1nF ±5% 50V-	813247	VIT
C433	Kondensator NP0	1nF ±5% 50V-	813247	VIT
C434	Kondensator NP0	1nF ±5% 50V-	813247	VIT
C435	Kondensator NP0	1nF ±5% 50V-	813247	VIT
C436	Kondensator X7R	10nF ±10% 50V-	813332	VIT
C438	Kondensator NP0	1nF ±5% 50V-	813247	VIT
C440	Kondensator NP0	3.3pF ±0.25pF	813217	VIT
C441	Kondensator NP0	1nF ±5% 50V-	813247	VIT
C442	Kondensator NP0	1nF ±5% 50V-	813247	VIT
C443	Kondensator NP0	1nF ±5% 50V-	813247	VIT
C444	Kondensator X7R	10nF ±10% 50V-	813332	VIT
C445	Kondensator NP0	1nF ±5% 50V-	813247	VIT
C446	Kondensator NP0	3.3pF ±0.25pF	813217	VIT
C450	Kondensator NP0	100pF ±5% 50V-	813235	VIT
C451	Kondensator X7R	10nF ±10% 50V-	813332	VIT
C452	Kondensator NP0	3.3pF ±0.25pF	813217	VIT
C453	Kondensator NP0	1nF ±5% 50V-	813247	VIT

Pos.	Benennung	Wert	HNK-Nr.	Herst.
C454	Kondensator NP0	1nF ±5% 50V-	813247	VIT
C455	Kondensator NP0	1nF ±5% 50V-	813247	VIT
C456	Kondensator X7R	10nF ±10% 50V-	813332	VIT
C460	Kondensator NP0	1nF ±5% 50V-	813247	VIT
C461	Kondensator NP0	3.3pF ±0.25pF	813217	VIT
C462	Kondensator X7R	10nF ±10% 50V-	813332	VIT
C463	Kondensator X7R	10nF ±10% 50V-	813332	VIT
C464	Kondensator X7R	10nF ±10% 50V-	813332	VIT
C465	Kondensator X7R	10nF ±10% 50V-	813332	VIT
C466	Kondensator NP0	5.6pF ±0.5pF	813220	VIT
C467	Kondensator X7R	10nF ±10% 50V-	813332	VIT
C470	Kondensator X7R	10nF ±10% 50V-	813332	VIT
C471	Kondensator X7R	100nF ±10% 50V-	813375	VIT
C472	Kondensator NP0	1nF ±5% 50V-	813247	VIT
C473	Elko	10µF ±20% 16V-	814382	RÖD
C474	Kondensator X7R	100nF ±10% 50V-	813375	VIT
C475	Kondensator X7R	100nF ±10% 50V-	813375	VIT
C476	Kondensator NP0	22pF ±5% 50V-	813227	VIT
C480	Kondensator X7R	10nF ±10% 50V-	813332	VIT
C481	Kondensator X7R	10nF ±10% 50V-	813332	VIT
C482	Kondensator X7R	10nF ±10% 50V-	813332	VIT
C483	Kondensator NP0	5.6pF ±0.5pF	813220	VIT
C500	Kondensator NP0	1nF ±5% 50V-	813247	VIT
C600	Kondensator NP0	1nF ±5% 50V-	813247	VIT
C601	Kondensator NP0	1nF ±5% 50V-	813247	VIT
C602	Kondensator NP0	1nF ±5% 50V-	813247	VIT
C603	Kondensator NP0	1nF ±5% 50V-	813247	VIT
C604	Kondensator NP0	1nF ±5% 50V-	813247	VIT
C605	Kondensator NP0	1nF ±5% 50V-	813247	VIT

Pos.	Benennung	Wert	HNK-Nr.	Herst.
C606	Kondensator NP0	100pF ±5% 50V-	813235	VIT
C607	Kondensator NP0	100pF ±5% 50V-	813235	VIT
C608	Kondensator NP0	100pF ±5% 50V-	813235	VIT
C611	Kondensator Z5U	1µF ±20% 50V-	813390	VIT
C612	Elko	10µF ±20% 16V-	814382	RÖD
C613	Kondensator X7R	10nF ±10% 50V-	813332	VIT
C614	Kondensator NP0	100pF ±5% 50V-	813235	VIT
C615	Kondensator NP0	100pF ±5% 50V-	813235	VIT
C616	Kondensator NP0	100pF ±5% 50V-	813235	VIT
C620	Kondensator NP0	100pF ±5% 50V-	813235	VIT
C621	Kondensator NP0	100pF ±5% 50V-	813235	VIT
C622	Kondensator NP0	100pF ±5% 50V-	813235	VIT
C623	Kondensator NP0	100pF ±5% 50V-	813235	VIT
C624	Kondensator NP0	100pF ±5% 50V-	813235	VIT
C625	Kondensator NP0	100pF ±5% 50V-	813235	VIT
C626	Kondensator NP0	100pF ±5% 50V-	813235	VIT
C630	Kondensator NP0	100pF ±5% 50V-	813235	VIT
C631	Kondensator NP0	100pF ±5% 50V-	813235	VIT
C632	Kondensator NP0	100pF ±5% 50V-	813235	VIT
C633	Kondensator NP0	100pF ±5% 50V-	813235	VIT
C634	Kondensator NP0	100pF ±5% 50V-	813235	VIT
C635	Kondensator NP0	100pF ±5% 50V-	813235	VIT
C636	Kondensator NP0	100pF ±5% 50V-	813235	VIT
C640	Kondensator NP0	100pF ±5% 50V-	813235	VIT
C641	Kondensator NP0	100pF ±5% 50V-	813235	VIT
C642	Kondensator NP0	100pF ±5% 50V-	813235	VIT
C643	Kondensator NP0	100pF ±5% 50V-	813235	VIT
C644	Kondensator NP0	100pF ±5% 50V-	813235	VIT
C645	Kondensator NP0	100pF ±5% 50V-	813235	VIT

Pos.	Benennung	Wert	HNK-Nr.	Herst.
C650	Kondensator NP0	100pF ±5% 50V-	813235	VIT
C651	Kondensator NP0	100pF ±5% 50V-	813235	VIT
C652	Kondensator NP0	100pF ±5% 50V-	813235	VIT
C653	Kondensator NP0	100pF ±5% 50V-	813235	VIT
C654	Kondensator NP0	100pF ±5% 50V-	813235	VIT
C655	Kondensator NP0	100pF ±5% 50V-	813235	VIT
C656	Kondensator NP0	100pF ±5% 50V-	813235	VIT
C660	Kondensator NP0	100pF ±5% 50V-	813235	VIT
C661	Kondensator NP0	100pF ±5% 50V-	813235	VIT
C662	Kondensator NP0	100pF ±5% 50V-	813235	VIT
C663	Kondensator NP0	100pF ±5% 50V-	813235	VIT
C664	Kondensator NP0	100pF ±5% 50V-	813235	VIT
C665	Kondensator NP0	100pF ±5% 50V-	813235	VIT
D1	NAND-Gatter	PC74HCT00T	834430	VAL
D2	Inverter	PC74HCT04T	834432	VAL
D3	Spannungsregler	LM723CM	834245	NS
D4	Decade Counter	PC74HCT390T	834438	VAL
D6	Decade Counter	PC74HCT390T	834438	VAL
D10	Flip-Flop	PC74HCT74T	834433	VAL
D100	2.5GHz Teiler :2	UPB584G	835396	NEC
D101	Frequenzteiler	SP8716MP	834447	PLES
D102	NAND-Gatter	PC74HCT00T	834430	VAL
D103	Frequenzteiler	MC12022AD	835359	MOT
D104	Inverter	PC74HCT04T	834432	VAL
D105	PLL-Synthesizer	NJ88C24MAMP	835399	PLES
D200	Flip-Flop	PC74HCT74T	834433	VAL
D201	PLL-Synthesizer	MB1501PF	835346	FUJI
D202	PLL-Synthesizer	MB1501PF	835346	FUJI

Pos.	Benennung	Wert	HNK-Nr.	Herst.
D203	NAND-Gatter	PC74HCT00T	834430	VAL
D300	1.1GHz Frequenzteiler	U813BSFP	835348	TF
D301	PLL-Synthesizer	MB1501PF	835346	FUJI
D302	PLL-Synthesizer	MB1501PF	835346	FUJI
D303	Phase-Frequency Detector	MC4044D	835345	MOT
D305	NAND-Gatter	PC74HCT00T	834430	VAL
D400	2.5GHz Teiler :2	UPB584G	835396	NEC
D401	2.5GHz Teiler :4	UPB585G	835395	NEC
D600	PIA (NMOS)	M5L8255AP-5	835027	MITSU
GL1	Zener-Diode	BZX84/C8V2	830478	VAL
GL2	Schottky-Diode	BAS70-04	830031	SIE
GL3	Zener-Diode	BZX84/C8V2	830478	VAL
GL4	Kapazitätsdiode	BB620	830622	SIE
GL5	Kapazitätsdiode	BB620	830622	SIE
GL6	Diode	BAS16	830552	VAL
GL7	Leuchtdiode rot	LSS260-D0	856200	SIE
GL10	Diode	BAV99	830491	VAL
GL11	Diode	BAV99	830491	VAL
GL12	Diode	BAV99	830491	VAL
GL101	Leuchtdiode rot	LSS260-D0	856200	SIE
GL102	Diode	BAS16	830552	VAL
GL200	Step Recovery Diode	MA44669-287	830518	M/ACOM
GL201	Diodenquartett	HSMS-2818	830555	HP
GL205	Diode	BAS16	830552	VAL
GL206	Leuchtdiode rot	LSS260-D0	856200	SIE
GL207	Zener-Diode	BZX84/C3V3	830496	VAL
GL300	Diode	BAS16	830552	VAL
GL301	Leuchtdiode rot	LSS260-D0	856200	SIE

Pos.	Benennung	Wert	HNK-Nr.	Herst.
GL302	Zener-Diode	BZX84/C3V3	830496	VAL
GL400	Diode	BAS16	830552	VAL
GL401	Diode	BAS16	830552	VAL
GL402	PIN-Diode	BA885	830533	SIE
GL403	PIN-Diode	BA885	830533	SIE
GL404	PIN-Diode	BA885	830533	SIE
GL405	Abstimm-Diode	BBY31	830618	VAL
GL406	Abstimm-Diode	BBY31	830618	VAL
GL410	PIN-Diode	BA885	830533	SIE
GL411	PIN-Diode	BA885	830533	SIE
GL412	Abstimm-Diode	BBY40	830619	VAL
GL413	Abstimm-Diode	BBY40	830619	VAL
GL414	PIN-Diode	BA885	830533	SIE
GL415	Abstimm-Diode	BBY40	830619	VAL
GL416	Abstimm-Diode	BBY40	830619	VAL
GL420	PIN-Diode	BA885	830533	SIE
GL421	Schottky-Diode	ND4991-17E	830508	NEC
GL422	Leuchtdiode rot	LSS260-D0	856200	SIE
L2	Ferrit-Spule	22µH ±15%	821318	SIE
L3	Ferrit-Spule	100µH ±15%	821322	SIE
L5	Ferrit-Spule	100µH ±15%	821322	SIE
L100	Keramik-Spule	1µH ±5%	821227	STET
L101	Ferrit-Spule	100µH ±15%	821322	SIE
L102	Ferrit-Spule	100µH ±15%	821322	SIE
L103	Ferrit-Spule	22µH ±15%	821318	SIE
L200	Ferrit-Spule	100µH ±15%	821322	SIE
L201	Ferrit-Spule	22µH ±15%	821318	SIE
L202	Keramik-Spule	10nH ±20%	821207	STET

WAVETEK Wireless Communications				Schaltteilliste	Anz. d. Seiten
11 Index	4089.17 Ä.Nr.	6.12.1994 Datum	VARGA Name	Bestückte Leiterplatte Typ: SYNTHESIS	28
Erst.: VARGA		Gepr.:		361 531 Sa	Seite Nr
Gerät: 4015 / 231 038 / 375 331					15

Pos.	Benennung	Wert	HNK-Nr.	Herst.
L203	Keramik-Spule	180nH ±5%	821218	STET
L204	HF-Übertrager		390048	STG
L205	Keramik-Spule	680nH ±5%	821225	STET
L207	Keramik-Spule	1µH ±5%	821227	STET
L210	Ferrit-Spule	47µH ±15%	821320	SIE
L211	Ferrit-Spule	47µH ±15%	821320	SIE
L212	Ferrit-Spule	47µH ±15%	821320	SIE
L300	Keramik-Spule	33nH ±10%	821209	STET
L301	Keramik-Spule	33nH ±10%	821209	STET
L302	Ferrit-Spule	47µH ±15%	821320	SIE
L303	Ferrit-Spule	47µH ±15%	821320	SIE
L304	Ferrit-Spule	47µH ±15%	821320	SIE
L305	Ferrit-Spule	47µH ±15%	821320	SIE
L400	Keramik-Spule	10nH ±20%	821207	STET
L401	Keramik-Spule	10nH ±20%	821207	STET
L402	Keramik-Spule	10nH ±20%	821207	STET
L403	Keramik-Spule	22nH ±20%	821208	STET
L404	Keramik-Spule	39nH ±10%	821210	STET
L405	Keramik-Spule	22nH ±20%	821208	STET
L406	Keramik-Spule	150nH ±5%	821217	STET
L410	Keramik-Spule	220nH ±5%	821219	STET
L411	Keramik-Spule	150nH ±5%	821217	STET
L412	Keramik-Spule	1µH ±5%	821227	STET
L413	Keramik-Spule	10nH ±20%	821207	STET
L414	Keramik-Spule	10nH ±20%	821207	STET
MI300	Mischer	ESMD-C1	872082	EURO
MP4	Stecklötöse		786009	ETT

WAVETEK Wireless Communications				Schaltteilliste	Anz. d. Seiten
11 Index	4089.17 Ä.Nr.	6.12.1994 Datum	VARGA Name	Bestückte Leiterplatte Typ: SYNTHESIS	28
Erst.: VARGA Gepr.:				361 531 Sa	Seite Nr
Gerät: 4015 / 231 038 / 375 331					16

Pos.	Benennung	Wert	HNK-Nr.	Herst.
MP6	Stecklötöse		786009	ETT
MP10	Stecklötöse		786009	ETT
Q1	Quarz HC45	20.0MHz	853103	TELEQ
R1	Chip-Widerstand	39kΩ ±1%	804756	VAL
R2	Chip-Widerstand	39kΩ ±1%	804756	VAL
R3	Chip-Widerstand	47kΩ ±1%	804757	VAL
R4	Chip-Widerstand	15kΩ ±1%	804751	VAL
R5	Chip-Widerstand	3.9kΩ ±1%	804744	VAL
R6	Chip-Widerstand	15kΩ ±1%	804751	VAL
R10	Chip-Widerstand	10kΩ ±1%	804749	VAL
R11	Chip-Widerstand	10kΩ ±1%	804749	VAL
R12	Chip-Widerstand	15kΩ ±1%	804751	VAL
R13	Chip-Widerstand	100kΩ ±1%	804761	VAL
R14	Chip-Widerstand	100Ω ±1%	804725	VAL
R15	Chip-Widerstand	100Ω ±1%	804725	VAL
R21	Chip-Widerstand	1.5kΩ ±1%	804739	VAL
R22	Potentiometer	1kΩ ±25%	807737	BOURNS
R23	Chip-Widerstand	3.3kΩ ±1%	804743	VAL
R24	Chip-Widerstand	4.7kΩ ±1%	804745	VAL
R25	Chip-Widerstand	10kΩ ±1%	804749	VAL
R26	Potentiometer	2kΩ ±25%	807738	BOURNS
R27	Potentiometer	2kΩ ±25%	807738	BOURNS
R30	Chip-Widerstand	15kΩ ±1%	804751	VAL
R31	Chip-Widerstand	1kΩ ±1%	804737	VAL
R32	Chip-Widerstand	4.7kΩ ±1%	804745	VAL
R33	Potentiometer	1kΩ ±25%	807737	BOURNS
R34	Potentiometer	20kΩ ±25%	807741	BOURNS

Pos.	Benennung	Wert	HNK-Nr.	Herst.
R35	Chip-Widerstand	5.6kΩ ±1%	804746	VAL
R36	Chip-Widerstand	10kΩ ±1%	804749	VAL
R40	Chip-Widerstand	10kΩ ±1%	804749	VAL
R41	Chip-Widerstand	4.7kΩ ±1%	804745	VAL
R42	Chip-Widerstand	4.7kΩ ±1%	804745	VAL
R43	Chip-Widerstand	47kΩ ±1%	804757	VAL
R44	Chip-Widerstand	4.7kΩ ±1%	804745	VAL
R45	Chip-Widerstand	470Ω ±1%	804733	VAL
R46	Chip-Widerstand	1kΩ ±1%	804737	VAL
R47	Chip-Widerstand	0Ω	804700	VAL
R50	Chip-Widerstand	47kΩ ±1%	804757	VAL
R51	Chip-Widerstand	10kΩ ±1%	804749	VAL
R52	Chip-Widerstand	10kΩ ±1%	804749	VAL
R53	Chip-Widerstand	10kΩ ±1%	804749	VAL
R54	Chip-Widerstand	10kΩ ±1%	804749	VAL
R55	Chip-Widerstand	47kΩ ±1%	804757	VAL
R56	Chip-Widerstand	4.7kΩ ±1%	804745	VAL
R57	Chip-Widerstand	10kΩ ±1%	804749	VAL
R61	Chip-Widerstand	150kΩ ±1%	804763	VAL
R62	Chip-Widerstand	150kΩ ±1%	804763	VAL
R63	Chip-Widerstand	47kΩ ±1%	804757	VAL
R64	Chip-Widerstand	47kΩ ±1%	804757	VAL
R65	Chip-Widerstand	47kΩ ±1%	804757	VAL
R66	Chip-Widerstand	10kΩ ±1%	804749	VAL
R67	Chip-Widerstand	22kΩ ±1%	804753	VAL
R70	Chip-Widerstand	2.2kΩ ±1%	804741	VAL
R71	Chip-Widerstand	1kΩ ±1%	804737	VAL
R72	Chip-Widerstand	3.3kΩ ±1%	804743	VAL
R73	Chip-Widerstand	1kΩ ±1%	804737	VAL

Pos.	Benennung	Wert	HNK-Nr.	Herst.
R75	Chip-Widerstand	6.8kΩ ±1%	804747	VAL
R76	Chip-Widerstand	27kΩ ±1%	804754	VAL
R100	Chip-Widerstand	33Ω ±5%	804719	VAL
R101	Chip-Widerstand	15kΩ ±1%	804751	VAL
R103	Chip-Widerstand	680Ω ±1%	804735	VAL
R104	Chip-Widerstand	150Ω ±1%	804727	VAL
R106	Chip-Widerstand	3.9kΩ ±1%	804744	VAL
R107	Chip-Widerstand	0Ω	804700	VAL
R108	Chip-Widerstand	100kΩ ±1%	804761	VAL
R109	Chip-Widerstand	4.7kΩ ±1%	804745	VAL
R110	Chip-Widerstand	10kΩ ±1%	804749	VAL
R111	Chip-Widerstand	3.9kΩ ±1%	804744	VAL
R112	Chip-Widerstand	470Ω ±1%	804733	VAL
R113	Chip-Widerstand	220Ω ±1%	804729	VAL
R114	Chip-Widerstand	0Ω	804700	VAL
R115	Chip-Widerstand	15kΩ ±1%	804751	VAL
R116	Chip-Widerstand	150Ω ±1%	804727	VAL
R117	Chip-Widerstand	22kΩ ±1%	804753	VAL
R118	Chip-Widerstand	47Ω ±5%	804721	VAL
R119	Chip-Widerstand	47Ω ±5%	804721	VAL
R120	Chip-Widerstand	100kΩ ±1%	804761	VAL
R121	Chip-Widerstand	10kΩ ±1%	804749	VAL
R122	Chip-Widerstand	10kΩ ±1%	804749	VAL
R123	Chip-Widerstand	1kΩ ±1%	804737	VAL
R124	Chip-Widerstand	1.5kΩ ±1%	804739	VAL
R127	Chip-Widerstand	150Ω ±1%	804727	VAL
R128	Chip-Widerstand	4.7kΩ ±1%	804745	VAL
R129	Chip-Widerstand	4.7kΩ ±1%	804745	VAL
R130	Chip-Widerstand	4.7kΩ ±1%	804745	VAL

Pos.	Benennung	Wert	HNK-Nr.	Herst.
R132	Chip-Widerstand	150kΩ ±1%	804763	VAL
R133	Chip-Widerstand	10kΩ ±1%	804749	VAL
R134	Chip-Widerstand	10kΩ ±1%	804749	VAL
R135	Chip-Widerstand	10kΩ ±1%	804749	VAL
R136	Chip-Widerstand	470Ω ±1%	804733	VAL
R137	Chip-Widerstand	150kΩ ±1%	804763	VAL
R140	Chip-Widerstand	47kΩ ±1%	804757	VAL
R141	Chip-Widerstand	100kΩ ±1%	804761	VAL
R142	Chip-Widerstand	47kΩ ±1%	804757	VAL
R143	Chip-Widerstand	47kΩ ±1%	804757	VAL
R149	Chip-Widerstand	100kΩ ±1%	804761	VAL
R150	Chip-Widerstand	2.2kΩ ±1%	804741	VAL
R151	Chip-Widerstand	100kΩ ±1%	804761	VAL
R152	Chip-Widerstand	470Ω ±1%	804733	VAL
R153	Chip-Widerstand	4.7kΩ ±1%	804745	VAL
R154	Chip-Widerstand	4.7kΩ ±1%	804745	VAL
R156	Chip-Widerstand	4.7kΩ ±1%	804745	VAL
R200	Chip-Widerstand	100Ω ±1%	804725	VAL
R201	Chip-Widerstand	100Ω ±1%	804725	VAL
R202	Chip-Widerstand	100Ω ±1%	804725	VAL
R203	Chip-Widerstand	100Ω ±1%	804725	VAL
R204	Chip-Widerstand	220Ω ±1%	804729	VAL
R205	Chip-Widerstand	47Ω ±5%	804721	VAL
R206	Chip-Widerstand	47Ω ±5%	804721	VAL
R209	Potentiometer	10kΩ ±25%	807740	BOURNS
R210	Chip-Widerstand	15kΩ ±1%	804751	VAL
R211	Chip-Widerstand	47Ω ±5%	804721	VAL
R212	Chip-Widerstand	22kΩ ±1%	804753	VAL
R213	Chip-Widerstand	470Ω ±1%	804733	VAL

Pos.	Benennung	Wert	HNK-Nr.	Herst.
R214	Chip-Widerstand	0Ω	804700	VAL
R215	Chip-Widerstand	470Ω ±1%	804733	VAL
R216	Chip-Widerstand	4.7kΩ ±1%	804745	VAL
R217	Chip-Widerstand	10Ω ±5%	804713	VAL
R220	Chip-Widerstand	1kΩ ±1%	804737	VAL
R221	Chip-Widerstand	10Ω ±5%	804713	VAL
R222	Chip-Widerstand	100Ω ±1%	804725	VAL
R223	Chip-Widerstand	39Ω ±5%	804720	VAL
R224	Chip-Widerstand	150Ω ±1%	804727	VAL
R225	Chip-Widerstand	150Ω ±1%	804727	VAL
R232	Chip-Widerstand	2.7kΩ ±1%	804742	VAL
R233	Chip-Widerstand	150Ω ±1%	804727	VAL
R234	Chip-Widerstand	82Ω ±5%	804724	VAL
R235	Chip-Widerstand	100Ω ±1%	804725	VAL
R236	Chip-Widerstand	82Ω ±5%	804724	VAL
R237	Chip-Widerstand	330Ω ±1%	804731	VAL
R238	Chip-Widerstand	56Ω ±5%	804722	VAL
R240	Chip-Widerstand	680Ω ±1%	804735	VAL
R241	Chip-Widerstand	10Ω ±5%	804713	VAL
R242	Chip-Widerstand	1kΩ ±1%	804737	VAL
R243	Chip-Widerstand	10kΩ ±1%	804749	VAL
R244	Chip-Widerstand	1kΩ ±1%	804737	VAL
R245	Chip-Widerstand	4.7kΩ ±1%	804745	VAL
R246	Chip-Widerstand	1kΩ ±1%	804737	VAL
R247	Chip-Widerstand	470kΩ ±1%	804769	VAL
R249	Chip-Widerstand	0Ω	804700	VAL
R250	Chip-Widerstand	10kΩ ±1%	804749	VAL
R251	Chip-Widerstand	1kΩ ±1%	804737	VAL
R252	Chip-Widerstand	4.7kΩ ±1%	804745	VAL

Pos.	Benennung	Wert	HNK-Nr.	Herst.
R253	Chip-Widerstand	220Ω ±1%	804729	VAL
R254	Chip-Widerstand	10kΩ ±1%	804749	VAL
R255	Chip-Widerstand	2.2kΩ ±1%	804741	VAL
R256	Chip-Widerstand	330Ω ±1%	804731	VAL
R260	Chip-Widerstand	1kΩ ±1%	804737	VAL
R261	Chip-Widerstand	0Ω	804700	VAL
R262	Chip-Widerstand	1MΩ ±1%	804773	VAL
R300	Chip-Widerstand	150Ω ±1%	804727	VAL
R301	Chip-Widerstand	47Ω ±5%	804721	VAL
R302	Chip-Widerstand	150Ω ±1%	804727	VAL
R303	Chip-Widerstand	2.7kΩ ±1%	804742	VAL
R304	Chip-Widerstand	680Ω ±1%	804735	VAL
R305	Chip-Widerstand	330Ω ±1%	804731	VAL
R306	Chip-Widerstand	150Ω ±1%	804727	VAL
R310	Chip-Widerstand	15Ω ±5%	804715	VAL
R312	Chip-Widerstand	2.7kΩ ±1%	804742	VAL
R313	Chip-Widerstand	680Ω ±1%	804735	VAL
R314	Chip-Widerstand	220Ω ±1%	804729	VAL
R315	Chip-Widerstand	150Ω ±1%	804727	VAL
R316	Chip-Widerstand	10Ω ±5%	804713	VAL
R317	Chip-Widerstand	150Ω ±1%	804727	VAL
R318	Chip-Widerstand	47Ω ±5%	804721	VAL
R319	Chip-Widerstand	150Ω ±1%	804727	VAL
R320	Chip-Widerstand	47Ω ±5%	804721	VAL
R321	Chip-Widerstand	150Ω ±1%	804727	VAL
R322	Chip-Widerstand	1kΩ ±1%	804737	VAL
R323	Chip-Widerstand	1kΩ ±1%	804737	VAL
R324	Chip-Widerstand	4.7kΩ ±1%	804745	VAL
R325	Chip-Widerstand	4.7kΩ ±1%	804745	VAL

Pos.	Benennung	Wert	HNK-Nr.	Herst.
R326	Chip-Widerstand	6.8kΩ ±1%	804747	VAL
R327	Chip-Widerstand	56Ω ±5%	804722	VAL
R330	Chip-Widerstand	470Ω ±1%	804733	VAL
R331	Chip-Widerstand	10kΩ ±1%	804749	VAL
R332	Chip-Widerstand	1kΩ ±1%	804737	VAL
R333	Chip-Widerstand	1kΩ ±1%	804737	VAL
R334	Chip-Widerstand	68Ω ±5%	804723	VAL
R335	Chip-Widerstand	5.6kΩ ±1%	804746	VAL
R336	Chip-Widerstand	220Ω ±1%	804729	VAL
R340	Chip-Widerstand	150Ω ±1%	804727	VAL
R341	Chip-Widerstand	220Ω ±1%	804729	VAL
R342	Chip-Widerstand	10Ω ±5%	804713	VAL
R343	Chip-Widerstand	2.7kΩ ±1%	804742	VAL
R344	Chip-Widerstand	680Ω ±1%	804735	VAL
R345	Chip-Widerstand	150Ω ±1%	804727	VAL
R346	Chip-Widerstand	47Ω ±5%	804721	VAL
R350	Chip-Widerstand	150Ω ±1%	804727	VAL
R351	Chip-Widerstand	150Ω ±1%	804727	VAL
R352	Chip-Widerstand	330Ω ±1%	804731	VAL
R353	Chip-Widerstand	15Ω ±5%	804715	VAL
R354	Chip-Widerstand	2.7kΩ ±1%	804742	VAL
R355	Chip-Widerstand	680Ω ±1%	804735	VAL
R356	Chip-Widerstand	150Ω ±1%	804727	VAL
R360	Chip-Widerstand	47Ω ±5%	804721	VAL
R361	Chip-Widerstand	150Ω ±1%	804727	VAL
R362	Chip-Widerstand	3.3kΩ ±1%	804743	VAL
R363	Chip-Widerstand	10kΩ ±1%	804749	VAL
R364	Chip-Widerstand	3.3kΩ ±1%	804743	VAL
R365	Chip-Widerstand	10kΩ ±1%	804749	VAL

Pos.	Benennung	Wert	HNK-Nr.	Herst.
R366	Chip-Widerstand	2.7kΩ ±1%	804742	VAL
R370	Chip-Widerstand	2.7kΩ ±1%	804742	VAL
R371	Chip-Widerstand	220Ω ±1%	804729	VAL
R372	Chip-Widerstand	22Ω ±5%	804717	VAL
R373	Chip-Widerstand	470kΩ ±1%	804769	VAL
R374	Chip-Widerstand	220Ω ±1%	804729	VAL
R375	Chip-Widerstand	10kΩ ±1%	804749	VAL
R376	Chip-Widerstand	2.2kΩ ±1%	804741	VAL
R377	Chip-Widerstand	0Ω	804700	VAL
R378	Chip-Widerstand	1MΩ ±1%	804773	VAL
R379	Chip-Widerstand	0Ω	804700	VAL
R380	Chip-Widerstand	330Ω ±1%	804731	VAL
R381	Chip-Widerstand	1kΩ ±1%	804737	VAL
R385	Chip-Widerstand	2.2kΩ ±1%	804741	VAL
R400	Chip-Widerstand	10kΩ ±1%	804749	VAL
R401	Chip-Widerstand	1.5kΩ ±1%	804739	VAL
R402	Chip-Widerstand	10Ω ±5%	804713	VAL
R403	Chip-Widerstand	10kΩ ±1%	804749	VAL
R404	Chip-Widerstand	1kΩ ±1%	804737	VAL
R405	Chip-Widerstand	10Ω ±5%	804713	VAL
R406	Chip-Widerstand	1kΩ ±1%	804737	VAL
R410	Chip-Widerstand	10Ω ±5%	804713	VAL
R411	Chip-Widerstand	10Ω ±5%	804713	VAL
R412	Chip-Widerstand	1.5kΩ ±1%	804739	VAL
R413	Chip-Widerstand	470Ω ±1%	804733	VAL
R414	Chip-Widerstand	10kΩ ±1%	804749	VAL
R415	Chip-Widerstand	1kΩ ±1%	804737	VAL
R416	Chip-Widerstand	4.7kΩ ±1%	804745	VAL
R420	Chip-Widerstand	1kΩ ±1%	804737	VAL

Pos.	Benennung	Wert	HNK-Nr.	Herst.
R421	Chip-Widerstand	1kΩ ±1%	804737	VAL
R422	Chip-Widerstand	47Ω ±5%	804721	VAL
R423	Chip-Widerstand	100kΩ ±1%	804761	VAL
R424	Chip-Widerstand	68kΩ ±1%	804759	VAL
R425	Chip-Widerstand	100Ω ±1%	804725	VAL
R426	Chip-Widerstand	10Ω ±5%	804713	VAL
R430	Chip-Widerstand	10kΩ ±1%	804749	VAL
R431	Chip-Widerstand	1kΩ ±1%	804737	VAL
R432	Chip-Widerstand	1.5kΩ ±1%	804739	VAL
R433	Chip-Widerstand	470Ω ±1%	804733	VAL
R434	Chip-Widerstand	1.5kΩ ±1%	804739	VAL
R435	Chip-Widerstand	1kΩ ±1%	804737	VAL
R436	Chip-Widerstand	1kΩ ±1%	804737	VAL
R440	Chip-Widerstand	47Ω ±5%	804721	VAL
R441	Chip-Widerstand	100kΩ ±1%	804761	VAL
R442	Chip-Widerstand	39kΩ ±1%	804756	VAL
R443	Chip-Widerstand	100Ω ±1%	804725	VAL
R444	Chip-Widerstand	10Ω ±5%	804713	VAL
R445	Chip-Widerstand	1kΩ ±1%	804737	VAL
R446	Chip-Widerstand	1kΩ ±1%	804737	VAL
R450	Chip-Widerstand	1kΩ ±1%	804737	VAL
R451	Chip-Widerstand	1kΩ ±1%	804737	VAL
R452	Chip-Widerstand	1kΩ ±1%	804737	VAL
R453	Chip-Widerstand	1kΩ ±1%	804737	VAL
R454	Chip-Widerstand	1kΩ ±1%	804737	VAL
R455	Chip-Widerstand	1kΩ ±1%	804737	VAL
R456	Chip-Widerstand	1kΩ ±1%	804737	VAL
R460	Chip-Widerstand	1kΩ ±1%	804737	VAL
R461	Chip-Widerstand	1kΩ ±1%	804737	VAL

Pos.	Benennung	Wert	HNK-Nr.	Herst.
R462	Chip-Widerstand	1kΩ ±1%	804737	VAL
R463	Chip-Widerstand	1kΩ ±1%	804737	VAL
R464	Chip-Widerstand	1kΩ ±1%	804737	VAL
R465	Chip-Widerstand	1kΩ ±1%	804737	VAL
R466	Chip-Widerstand	8.2kΩ ±1%	804748	VAL
R470	Chip-Widerstand	820Ω ±1%	804736	VAL
R471	Chip-Widerstand	150Ω ±1%	804727	VAL
R472	Chip-Widerstand	100Ω ±1%	804725	VAL
R473	Chip-Widerstand	220Ω ±1%	804729	VAL
R474	Chip-Widerstand	27Ω ±5%	804718	VAL
R475	Chip-Widerstand	27Ω ±5%	804718	VAL
R476	Chip-Widerstand	68Ω ±5%	804723	VAL
R477	Chip-Widerstand	0Ω	804700	VAL
R478	Chip-Widerstand	1MΩ ±1%	804773	VAL
R479	Chip-Widerstand	10Ω ±5%	804713	VAL
R480	Chip-Widerstand	1kΩ ±1%	804737	VAL
R481	Chip-Widerstand	47Ω ±5%	804721	VAL
R482	Chip-Widerstand	10Ω ±5%	804713	VAL
R483	Chip-Widerstand	1kΩ ±1%	804737	VAL
R484	Chip-Widerstand	100Ω ±1%	804725	VAL
R485	Chip-Widerstand	10kΩ ±1%	804749	VAL
R486	Chip-Widerstand	220Ω ±1%	804729	VAL
R490	Chip-Widerstand	1MΩ ±1%	804773	VAL
R491	Chip-Widerstand	15kΩ ±1%	804751	VAL
R492	Chip-Widerstand	3.3kΩ ±1%	804743	VAL
R493	Chip-Widerstand	10kΩ ±1%	804749	VAL
R494	Chip-Widerstand	10Ω ±5%	804713	VAL
R495	Chip-Widerstand	3.3kΩ ±1%	804743	VAL
R496	Chip-Widerstand	1kΩ ±1%	804737	VAL

Pos.	Benennung	Wert	HNK-Nr.	Herst.
R500	Chip-Widerstand	8.2kΩ ±1%	804748	VAL
R501	Chip-Widerstand	820Ω ±1%	804736	VAL
R502	Chip-Widerstand	150Ω ±1%	804727	VAL
R503	Chip-Widerstand	220Ω ±1%	804729	VAL
R504	Chip-Widerstand	100Ω ±1%	804725	VAL
R505	Chip-Widerstand	27Ω ±5%	804718	VAL
R506	Chip-Widerstand	27Ω ±5%	804718	VAL
R507	Chip-Widerstand	10Ω ±5%	804713	VAL
R600	Chip-Widerstand	15kΩ ±1%	804751	VAL
R602	Chip-Widerstand	4.7kΩ ±1%	804745	VAL
R603	Chip-Widerstand	4.7kΩ ±1%	804745	VAL
R604	Chip-Widerstand	4.7kΩ ±1%	804745	VAL
R605	Chip-Widerstand	4.7kΩ ±1%	804745	VAL
R606	Chip-Widerstand	10kΩ ±1%	804749	VAL
R610	Chip-Widerstand	10kΩ ±1%	804749	VAL
R611	Chip-Widerstand	10kΩ ±1%	804749	VAL
ST66	Stiftleiste 90°	40polig	884486	AMP
T1	NPN Transistor	BFR93A	832287	VAL
T2	NPN Transistor	BC850B	832284	SIE
T3	PNP Transistor	BC860B	832285	VAL
T4	N-Kanal JFET	MMBF4860	832434	MOT
T100	NPN Transistor	BC850B	832284	SIE
T101	N-Kanal SIPMOS	BSS138	832439	SIE
T200	NPN Transistor	BFQ19	832290	SIE
T202	NPN Transistor	BFR93A	832287	VAL
T203	NPN Transistor	BC850B	832284	SIE
T204	PNP Transistor	BC860B	832285	VAL

Pos.	Benennung	Wert	HNK-Nr.	Herst.
T205	NPN Transistor	BC850B	832284	SIE
T206	PNP Transistor	BC860B	832285	VAL
T300	NPN Transistor	BFR93A	832287	VAL
T301	NPN Transistor	BFR93A	832287	VAL
T303	NPN Transistor	BFR93A	832287	VAL
T304	PNP Transistor	BC860B	832285	VAL
T305	NPN Transistor	BC850B	832284	SIE
T306	NPN Transistor	BC850B	832284	SIE
T310	NPN Transistor	BFR93A	832287	VAL
T311	NPN Transistor	BFR93A	832287	VAL
T400	NPN Transistor	BC850B	832284	SIE
T401	PNP Transistor	BC860B	832285	VAL
T402	NPN Transistor	BFR93A	832287	VAL
T403	NPN Transistor	BC850B	832284	SIE
T404	PNP Transistor	BC860B	832285	VAL
T405	NPN Transistor	BFR93A	832287	VAL
T406	NPN Transistor	BFR93A	832287	VAL
T407	NPN Transistor	BFR93A	832287	VAL

Oscillator

The oscillator comprises the functional units oscillation generation, level control and output amplifier.

The oscillator circuit with transistor T1 as its active element works as a negative-impedance oscillator and can be tuned over more than an octave with a voltage that acts via control line E1-7 on variable-capacitance diodes GL5, GL6.

The generated signal is applied to a PIN-diode attenuator with diodes GL4, GL3, GL2 and is then distributed on the two signal paths E1-16 and E2-4 by amplifiers A1 and A2.

The PIN-diode attenuator is part of an amplitude-control circuit. The actual value of the output voltage is fed to the integral-action controller by operational amplifier A3 from the peak rectification of the RF signal by diode GL1. By comparison with the setpoint, set by voltage divider R22, R21, the controller determines the current through the PIN diodes.

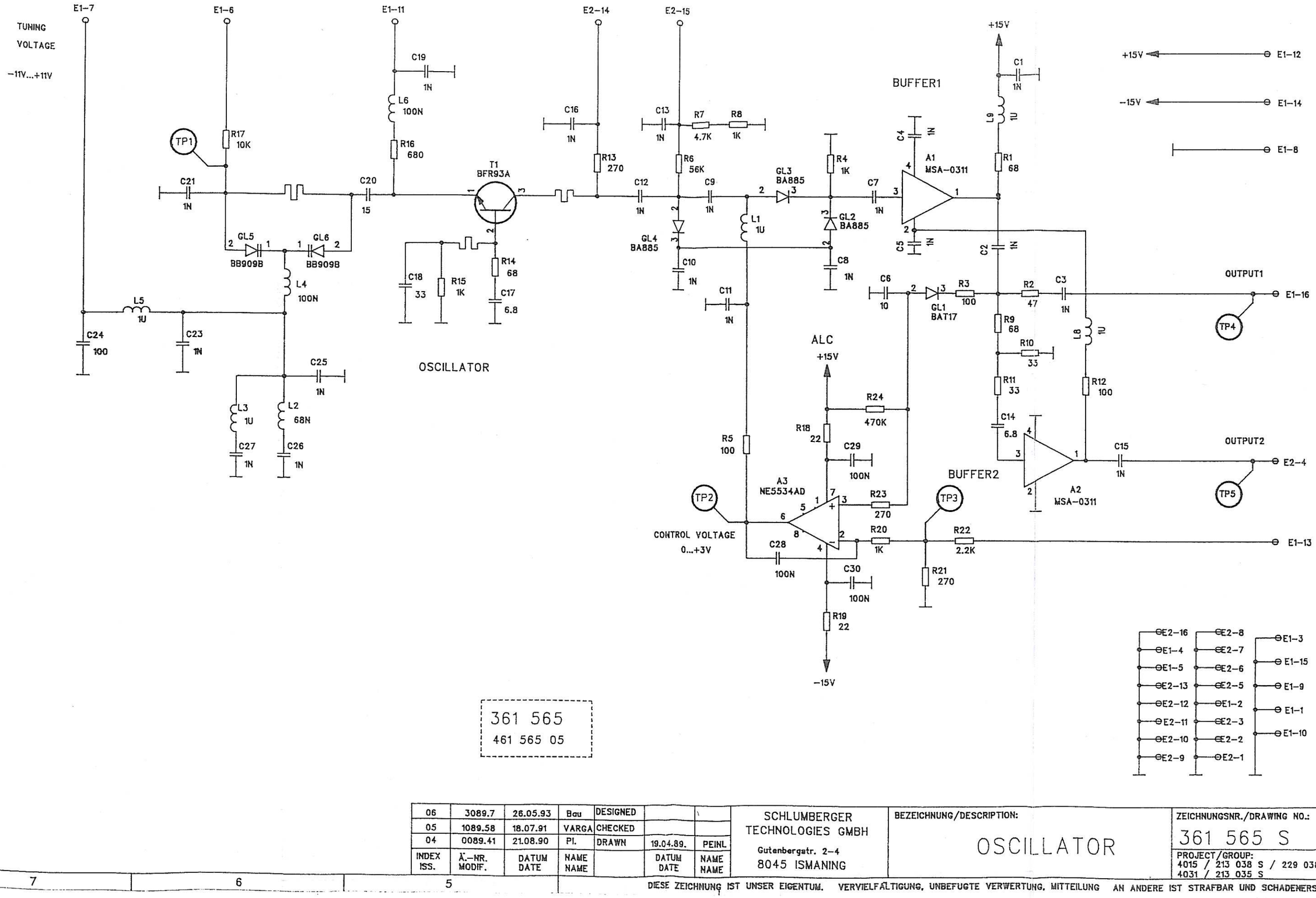

361 565
461 565 05

INDEX ISS.	Ä.−NR. MODIF.	DATUM DATE	NAME NAME		DATUM DATE	NAME NAME
06	3089.7	26.05.93	Bau	DESIGNED		
05	1089.58	18.07.91	VARGA	CHECKED		
04	0089.41	21.08.90	PI.	DRAWN	19.04.89.	PEINL

SCHLUMBERGER TECHNOLOGIES GMBH
Gutenbergstr. 2−4
8045 ISMANING

BEZEICHNUNG/DESCRIPTION:
OSCILLATOR

ZEICHNUNGSNR./DRAWING NO.: 361 565 S
1 VON/OF 1
PROJECT/GROUP: 4015 / 213 038 S / 229 038 S
4031 / 213 035 S
BLATT SHEET

DIESE ZEICHNUNG IST UNSER EIGENTUM. VERVIELFÄLTIGUNG, UNBEFUGTE VERWERTUNG, MITTEILUNG AN ANDERE IST STRAFBAR UND SCHADENERSATZPFLICHTIG.

This drawing is the property of SCHLUMBERGER. Reproduction, unauthorized use, communikation to a third party is liable to prosecution and liable for damages.

Reflow gelötet und Sonderlötung
hierzu Bauteilklebemaske 461 565 05

Ansicht mit Leiterbahnen nur zur Orientierung

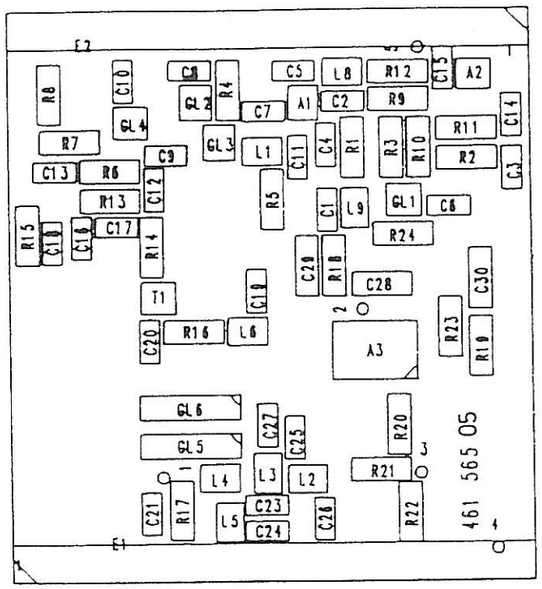

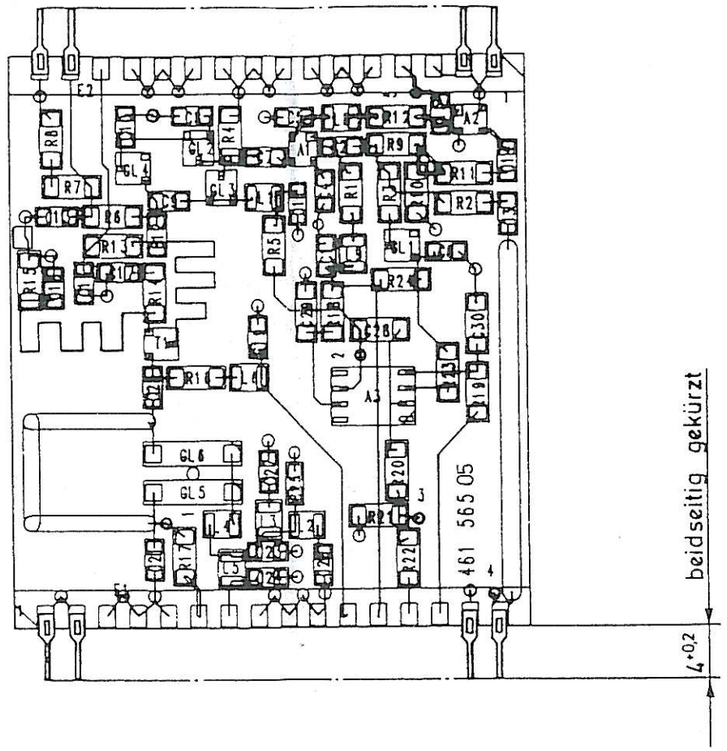

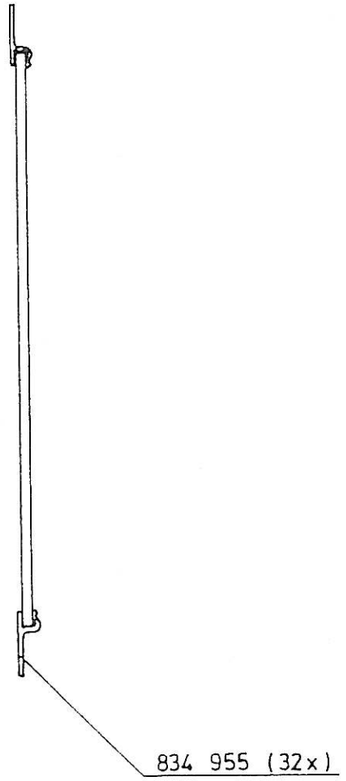

Schaltplanpositionierung = 361 565 S / Sa

				Richter	Format (Toleranz)	Maßstab	Schlumberger Meßgeräte GmbH		
							Ingolstadter Straße 67 a 8000 München 46		
				Werkstoff		2 : 1	Bestückte Leiterplatte		
							Typ : OSCILLATOR		
				Oberfläche	1993	Datum	Name		
04	3089,7	27.7.93	Kr.		gez	27.7.93	Kr.	361 565	
Ausgabe	Änderung	Datum	Name		bearb				
					gepr			Gerät 4015 / 213 038, 375 331 / 229 038, 375 333	

Pos.	Benennung	Wert	HNK-Nr.	Herst.
A1	Verstärker	MSA-0311	834229	AVAN
A2	Verstärker	MSA-0311	834229	AVAN
A3	OPV	NE5534AD	834209	VAL
C1	Kondensator NP0	1nF ±5% 50V-	813247	VIT
C2	Kondensator NP0	1nF ±5% 50V-	813247	VIT
C3	Kondensator NP0	1nF ±5% 50V-	813247	VIT
C4	Kondensator NP0	1nF ±5% 50V-	813247	VIT
C5	Kondensator NP0	1nF ±5% 50V-	813247	VIT
C6	Kondensator NP0	10pF ±5% 50V-	813223	VIT
C7	Kondensator NP0	1nF ±5% 50V-	813247	VIT
C8	Kondensator NP0	1nF ±5% 50V-	813247	VIT
C9	Kondensator NP0	1nF ±5% 50V-	813247	VIT
C10	Kondensator NP0	1nF ±5% 50V-	813247	VIT
C11	Kondensator NP0	1nF ±5% 50V-	813247	VIT
C12	Kondensator NP0	1nF ±5% 50V-	813247	VIT
C13	Kondensator NP0	1nF ±5% 50V-	813247	VIT
C14	Kondensator NP0	6.8pF ±0.5pF	813221	VIT
C15	Kondensator NP0	1nF ±5% 50V-	813247	VIT
C16	Kondensator NP0	1nF ±5% 50V-	813247	VIT
C17	Kondensator NP0	6.8pF ±0.5pF	813221	VIT
C18	Kondensator NP0	33pF ±5% 50V-	813229	VIT
C19	Kondensator NP0	1nF ±5% 50V-	813247	VIT
C20	Kondensator NP0	15pF ±5% 50V-	813225	VIT
C21	Kondensator X7R	1nF ±10% 50V-	813320	VIT
C23	Kondensator NP0	1nF ±5% 50V-	813247	VIT
C24	Kondensator NP0	100pF ±5% 50V-	813235	VIT
C25	Kondensator NP0	1nF ±5% 50V-	813247	VIT
C26	Kondensator NP0	1nF ±5% 50V-	813247	VIT

Schlumberger Technologies GmbH				Schaltteilliste	Anz. d. Seiten
05 Index	3089.7 Ä.Nr.	26.5.1993 Datum	Bau Name	Bestückte Leiterplatte Typ: OSCILLATOR	3
Erst.: UNGER		Gepr.:		361 565 Sa	Seite Nr
Gerät: 4015 / 213 038 , 375 331 / 229 038 , 375 333					1

Pos.	Benennung	Wert	HNK-Nr.	Herst.
C27	Kondensator NP0	1nF ±5% 50V-	813247	VIT
C28	Kondensator X7R	100nF ±10% 50V-	813375	VIT
C29	Kondensator X7R	100nF ±10% 50V-	813375	VIT
C30	Kondensator X7R	100nF ±10% 50V-	813375	VIT
GL1	Schottky-Diode	BAT17	830516	VAL
GL2	PIN-Diode	BA885	830533	SIE
GL3	PIN-Diode	BA885	830533	SIE
GL4	PIN-Diode	BA885	830533	SIE
GL5	Abstimmdiode	BB909B	830616	VAL
GL6	Abstimmdiode	BB909B	830616	VAL
L1	Keramik-Spule	1µH ±5%	821227	STET
L2	Keramik-Spule	68nH ±5%	821213	STET
L3	Keramik-Spule	1µH ±5%	821227	STET
L4	Keramik-Spule	100nH ±5%	821215	STET
L5	Keramik-Spule	1µH ±5%	821227	STET
L6	Keramik-Spule	100nH ±5%	821215	STET
L8	Keramik-Spule	1µH ±5%	821227	STET
L9	Keramik-Spule	1µH ±5%	821227	STET
R1	Chip-Widerstand	68Ω ±5%	804723	VAL
R2	Chip-Widerstand	47Ω ±5%	804721	VAL
R3	Chip-Widerstand	100Ω ±1%	804725	VAL
R4	Chip-Widerstand	1kΩ ±1%	804737	VAL
R5	Chip-Widerstand	100Ω ±1%	804725	VAL
R6	Chip-Widerstand	56kΩ ±1%	804758	VAL
R7	Chip-Widerstand	4.7kΩ ±1%	804745	VAL
R8	Chip-Widerstand	1kΩ ±1%	804737	VAL

Pos.	Benennung	Wert	HNK-Nr.	Herst.
R9	Chip-Widerstand	68Ω ±5%	804723	VAL
R10	Chip-Widerstand	33Ω ±5%	804719	VAL
R11	Chip-Widerstand	33Ω ±5%	804719	VAL
R12	Chip-Widerstand	100Ω ±1%	804725	VAL
R13	Chip-Widerstand	270Ω ±1%	804730	VAL
R14	Chip-Widerstand	68Ω ±5%	804723	VAL
R15	Chip-Widerstand	1kΩ ±1%	804737	VAL
R16	Chip-Widerstand	680Ω ±1%	804735	VAL
R17	Chip-Widerstand	10kΩ ±1%	804749	VAL
R18	Chip-Widerstand	22Ω ±5%	804717	VAL
R19	Chip-Widerstand	22Ω ±5%	804717	VAL
R20	Chip-Widerstand	1kΩ ±1%	804737	VAL
R21	Chip-Widerstand	270Ω ±1%	804730	VAL
R22	Chip-Widerstand	2.2kΩ ±1%	804741	VAL
R23	Chip-Widerstand	270Ω ±1%	804730	VAL
R24	Chip-Widerstand	470kΩ ±1%	804769	VAL
T1	NPN Transistor	BFR93A	832287	VAL

Schlumberger Technologies GmbH				Schaltteilliste	Anz. d. Seiten
05 Index	3089.7 Ä.Nr.	26.5.1993 Datum	Bau Name	Bestückte Leiterplatte Typ: OSCILLATOR	3
Erst.: UNGER		Gepr.:		361 565 Sa	Seite Nr
Gerät: 4015 / 213 038 , 375 331 / 229 038 , 375 333					3

Functioning of 4015 Computer

Functional Blocks

The microprocessor system of the 4015 consists of the following major functional blocks:

- microprocessor
- function control with decoders, bus and clock control
- system memory for program and battery-buffered data
- system control with interrupt processing unit
- digital signal synthesizer
- graphics display controller with display medium

Fig. 1 at the end of this section shows a block diagram of the functional blocks. Their locations are shaded in Fig. 2 through 8 (see also component layout).

Functional Description

For the periphery the CPU 68000 works in two different modes, synchronous or asynchronous. In the former case the CPU only works as fast as the slowest synchronous peripheral device, while its speed in asynchronous mode adapts to the individual speed of the particular peripheral device that is addressed. To be able to differentiate between the two modes, the CPU weights the signals VPA and DTACK at certain points in time, and these signals cannot go active (L) until the addressed peripheral device has actually completed its task. The microprocessor executes word accesses on the memory and the DSP part. The remaining peripheral access operations are byte-oriented without affecting efficiency.

The asynchronous peripherals include data and program memories D2, D3, D19, D20 (RAM) and P3, P4 (EPROM), the DSP and GDC part as well as interrupt controller D7. D103 (optional output register) and D104 (optional input buffer with version code) plus the version buffer (ROV) of the optional printer interface also work asynchronously. The DSP and GDC parts, because of the abbreviated addressing, are within the upper 32 Kbytes of the address space so that - to the DSP part in particular - access is possible with greater timing efficiency.

All parts of the periphery that are not time-critical work synchronously, ie AFCOUNTER D1, IFCOUNTER D18, PIABUS devices D15 and D16 as well as the periphery of the optional printer interface.

Besides the internal interrupt sources of controller D7, the system works with eight external interrupt sources on level 2 of the CPU interrupts. The individual sources have the following priority:

Interrupt priority	Interrupt source
0	Serial interface
1	IF counter
2	Key strobe from front panel
3	Rotor strobe from spinwheel
4	AF counter 1
5	Option 1: IEEE bus, RS-232-C, ASCII keyboard or Option 2: Centronics, RS-232-C, ASCII keyboard
6	External sync
7	AF counter 0

The priority increases with significance.

The function control (Fig. 3) generates all the initialization and clock signals that are necessary for the working of the computer; it also includes the address and signal decoders to ensure full functionality of the microprocessor.

With the aid of PLL circuit D100 the clock of 8 MHz for microprocessor D23, the counter timing for AF counters D1 and D18, the clocks of 4 MHz and 800 kHz for the serial bus controller plus the 400-kHz clock for the serial transfer rate are derived from an 800-kHz sinusoidal signal of low amplitude and low in harmonics. By changing the EPLD D101 it is possible to switch the processor timing to 11 MHz on D101 33 without affecting the remainder of the timing. Digital squarewave signals of 16 MHz must appear on D100 4 and of 800 kHz on D100 3.

To ensure a valid program start when powering on or when the RESET key is struck, device A105 generates a RESET and a HALT signal of defined duration for the microprocessor. Then all peripheral devices are initialized and relevant parameters are set. After that the set is ready to receive entries and work as programmed.

In the normal bus cycle the microprocessor first sets the function code and the valid address. Then the specific STROBE signals for data (UDS, LDS) and addresses (AS, VMA) and the data-direction signal R/W are made active. The signal decoders of the function control produce, as a result of the bus status, the relevant acknowledgement signals (DTACK, VPA), according to which the microprocessor differentiates between synchronous and asynchronous access. If the acknowledgement signals are missing because of error or interference, the microprocessor automatically inserts wait cycles. There is also signal conversion to match devices of different signal specifications to the bus.

A further task of the function control is to supervise correct processing of program interrupts. If an external interrupt appears, the function code FC0 through FC2 of CPU D23 is used to acknowledge the interrupt to interrupt controller D7. At the same time DTACK must ensure that the CPU executes an asynchronous access. In an interrupt-acknowledge cycle controller D7 then sends the vector of the relevant interrupt and the CPU goes into interrupt processing.

The system control (Fig. 5) consists of the interface devices of the parallel PIABUS and the serial bus as well as the controller device (D15, D16, D7). The PIABUS controls the EXTERNAL MEMORY INTERFACE, the front panel, all AF/RF stages and an optional passive/intelligent, parallel interface. It consists of eight data lines HPD0 through HPD7 or SPD0 through SPD7, the four address lines HPA0 through HPA3 or SPA0 through SPA3 and the eleven select lines SPCS0 through SPCS7, HPCS0, HPCS2 and HPCS3. Valid data XPDi are taken under bus address XPAj with select signal XPCSk from the addressed latch of the particular stage.

In addition to the PIABUS there is, for reasons of compatibility with STABILOCK 4031, a slot with a serial interface for the DATA MODULE. The required control signals are generated with D16 (DMS0, DMS1, DMRTS). The related interrupt control and data processing are handled by D7. The clock DMSCLK for serial transfer is processed in D101 synchronously with the 800-kHz clock and is 400 kHz. This results in a transfer rate of 50 kbauds.

The layout of the system memory (Fig. 4) is designed so that devices of greater memory capacity can also be used. By simply exchanging the 32 K * 8-bit RAMs (D2, D3, D19, D20) for those of 128 K * 8 bits it is possible to increase the capacity of data memory from 128 to 512 Kbytes. P1 has to be altered accordingly for selecting the PAL. The address plan is as shown in Table 1. RAMs D2 and D3 are battery-backed by devices D27 and D28 to preserve current instrument settings.

As far as data retention is concerned, it should be noted that the conditions

(1) $V_{batt} \geq 2.0$ V

and

(2) $V_{CC} \geq V_{batt} - 0.2$ V

must be maintained and that, if the minimum supply voltage is not maintained, no unwanted write operations are triggered by interference on the select lines. All of these conditions are guaranteed by devices D27 and D28: if Vcc falls below the minimum figure of 4.75 to 4.5 V, the select signal of the address decoders is isolated from the RAMs and held at H. In this way no unwanted write cycles can occur. If Vcc falls below the value of the battery voltage, the supply to the RAMs is automatically taken over by the battery. It is ensured at all times that the level of the select signals satisfies condition (2). If Vcc drops below 4.5 V, the RESET device A105 responds and ensures defined resetting of the processor including the connected peripherals.

Program memory is formed of the two 2-Mbit EPROMs D8 and D9. Here too the circuit is designed so that optionally 4-Mbit and 8-Mbit EPROMs can be inserted. The jumpers S1, S2, S3 and S4 are wired as follows:

EPROM	S1	S2	S3	S4
2 Mbits	open	open	open	open
4 Mbits	closed	closed	open	open
8 Mbits	closed	closed	closed	closed

Table 1: Memory MAP

No.	A23 A22 A21 A20	A17 A15	A14 A13
0	0 0 0 0		EPROM
1			
2	0 0 1 0	[1])	RAM
3	0 0 1 1		ROV
4	0 1 0 0		ENIN
5	0 1 0 1		ENOUT
6	0 1 1 0		D7
7			
8	1 0 0 0		D1
9	1 0 0 1		OPT2 (CENTR./STABTXTR)
A	1 0 1 0		D15
B	1 0 1 1		D16
C	1 1 0 0		D18
D	1 1 0 1		OPT0 (IEEE)
E	1 1 1 0		OPT1 (RS-232-C)
F	1 1 1 1	1	0 0
		1	0 1 DSP PART
		1	1 0 GDC PART

[1]) Depending on the memory configuration (4*32 Kbytes or 4*128 Kbytes) address bit A15 or A17 is used for memory decoding, meaning that:

No.	A23 A22 A21 A20	A17/A15	
2	0 0 1 0	0	RAM0 (32/128 Kwords)
2		1	RAM1 (32/128 Kwords)

The tasks of the DSP part (Fig. 8) are the measurement of analog signals, their computation into measured values (power, rms, etc) and the synthesizing of filters. For these purposes there is a 16-bit accumulator/multiplier D105 and the A/D converter A8. A multiplexer selects the individual signal sources on the DEMOD stage. Registers D113 and D114 are for isolation between A/D converter A8 and the microprocessor bus and for simple extension of the signed 12-bit measured results to word length.

The core element of the GDC part (Fig. 7) is graphics processor D50. With its control information it generates and modifies the pixels of the required graphics elements or reads them for transfer to the printer. The display is electroluminescent. To prevent interference between the display and the graphics processor there are two pixel memories D57, D58 and D63, D64. For clocking the graphics processor and the start/stop oscillator, 5.5 and 11 MHz are required, these being derived from a crystal oscillator (22 MHz).

The counter part consists of an AF and an RF/IF counter D1 and D18 with a maximum count frequency of 10 MHz in each case.

The interface between the system bus and the IF counter consists of a multiplexer D66, with which it is possible to switch between the two signals AF-COUNT and IF-COUNT, which are filtered by lowpasses. The interface between the system bus and AF counters consists of a multiplexer D66, with which it is possible to switch between the signals AF-COUNT and IF-COUNT or from an interconnected lowpass filter to eliminate inteference.

The function control contains the required logic for controlling the two counters D1 and D18 in timing and frequency measurements.

Startup and Troubleshooting of 4015 Computer

Insert the computer in the correct slot of the set. Switch on STABILOCK 4015 and wait until the startup procedure (illumination of all LEDs, acoustic signal) has been completed.

After this it is possible to perform functional tests according to the following diagnostics schedule. According to what happens in a functional test ("YES" or "NO"), the schedule branches to further tests.

Signals:

Squarewave signal = signal of stated frequency within signal levels "0" and "1"
"1" = signal level ≥ 2.0 V
"0" = signal level ≤ 0.8 V

Testpoints:

Dxyz a = component **D** number **xyz** pin **a**

Diagnostics Schedule

1. Clock signal 8 MHz present?

Microprocessor D23 must have a clock signal of 8 MHz on pin 15.
If the actual frequency differs very much from this, the cause is very likely to be found in PLL D100.

1.1. D23 15 8 MHz squarewave signal

Function OK?
If YES, continue with 2.
If NO, continue with 1.2.

1.2 Check signal path.

D110 11 8 MHz squarewave signal

Function OK?
If YES, continue with 1.3.
If NO, then

D110 12/13 8 MHz squarewave signal

Function OK?
If YES, D110 defective?
shortcircuit?
back to 1.
If NO, continue with 1.3.

1.3 Check signal path.

D101 6 8 MHz squarewave signal

Function OK?
If YES, continue with 1.4.
If NO, then

D101 16 800 kHz squarewave signal

Function OK?
If YES, continue with 1.4.
If NO, D101 defective?
shortcircuit?

1.4 Check signal path.

D100 3 800 kHz squarewave signal

Function OK?
If YES, continue with 1.6.
If NO, continue with 1.5.

1.5 Check signal path.

D100 4 16 MHz squarewave signal

Function OK?
If YES, continue with 2.
If NO, continue with 1.6.

1.6 Check signal path.

D100 14 800 kHz sinusoidal signal, 200 mV

Function OK?
If YES, continue with 2.

2. RESET signal active?

After a faultless program start, RESET (D23 20) and HALT (D23 19) will be logic 1. If this is not so, go through the diagnostics:

2.1 Check signal path.
Press the RESET key a number of times and measure:

D23 20 1/0/1 transition

Function OK?
If YES, continue with 3.
If NO, continue with 2.2.

2.2 Check signal path..
Press the RESET key a number of times and measure:

D101 3 1/0/1 transition

Function OK?
If YES, continue with 2.3.
If NO, missing connection?
shortcircuit?
A105 defective?

2.3 Check signal path.
Press the RESET key a number of times and measure:

D101 7 0/1/0 transition

Function OK?
If YES, continue with 2.4.
If NO, EPLD defective?

2.4 Check signal path.
Press the RESET key a number of times and measure:

D101 8 1/0/1 transition

Function OK?
If YES, continue with 2.5.
If NO, EPLD defective?

2.5 Check signal path.
Press the RESET key a number of times and measure:

D101 9 1/0/1 transition

Function OK?
If YES, continue with 3.
If NO, EPLD defective?

2.6 Check signal path.
Press the RESET key a number of times and measure:

D23 19 1/0/1 transition

Function OK?
If YES, continue with 4.
If NO, continue with 3.

3. HALT signal active?

3.1 Check signal path.
Press the RESET key a number of times and measure:

D23 19 1/0/1 transition

Function OK?
If YES, continue with 4.
If NO, continue with 3.2.

3.2 Check signal path.
Press the RESET key a number of times and measure:

D101 3 1/0/1 transition

Function OK?
If YES, continue with 3.3.
If NO, missing connection?
shortcircuit?
A105 defective?

3.3 Check signal path.
Press the RESET key a number of times and measure:

D101 7 0/1/0 transition

Function OK?
If YES, continue with 3.4.
If NO, EPLD defective?

3.4 Check signal path.
Press the RESET key a number of times and measure:

D101 8 1/0/1 transition

Function OK?
If YES, continue with 3.5.
If NO, EPLD defective?

3.5 Check signal path.
Press the RESET key a number of times and measure:

D101 9 1/0/1 transition

Function OK?
If YES, continue with 3.6.
If NO, EPLD defective?

3.6 Check signal path.
Press the RESET key a number of times and measure:

D23 20 1/0/1 transition

Function OK?
If YES, continue with 4.
If NO, continue with 3.7.

3.7 Check signal path.
Keep the RESET key depressed and measure:
D23 19 = 0
D23 20 = 0
Release the RESET key and wait a moment:
If now D23 19 = 0 and D23 20 = 1, this means that there is most likely a fault in memory access (missing connection, shortcircuit on address or data bus).

4. STROBE signals?

If the signals

AS: D23 6
LDS: D23 8
UDS: D23 7

are steady 0, the CPU has received either no VPA or no DTACK signal. Possible causes of the fault are the devices P2 and D7.

5. End of diagnostics

Fig. 1: Block diagram of COMPUTER board

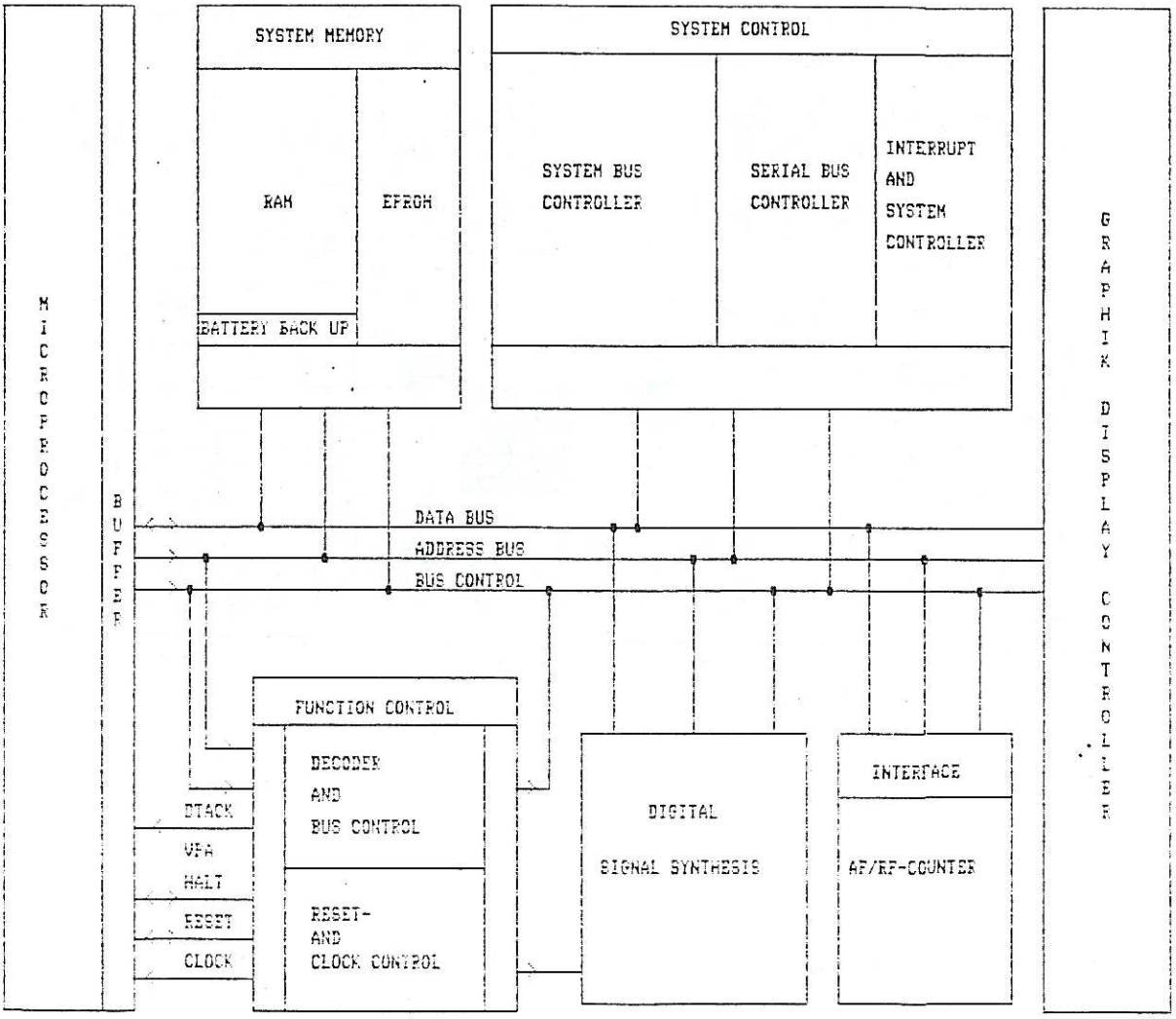

Fig. 2: Processor part. This consists of microprocessor D23 (MC68000), address buffers D12 and D13 and data buffers D21 and D22.

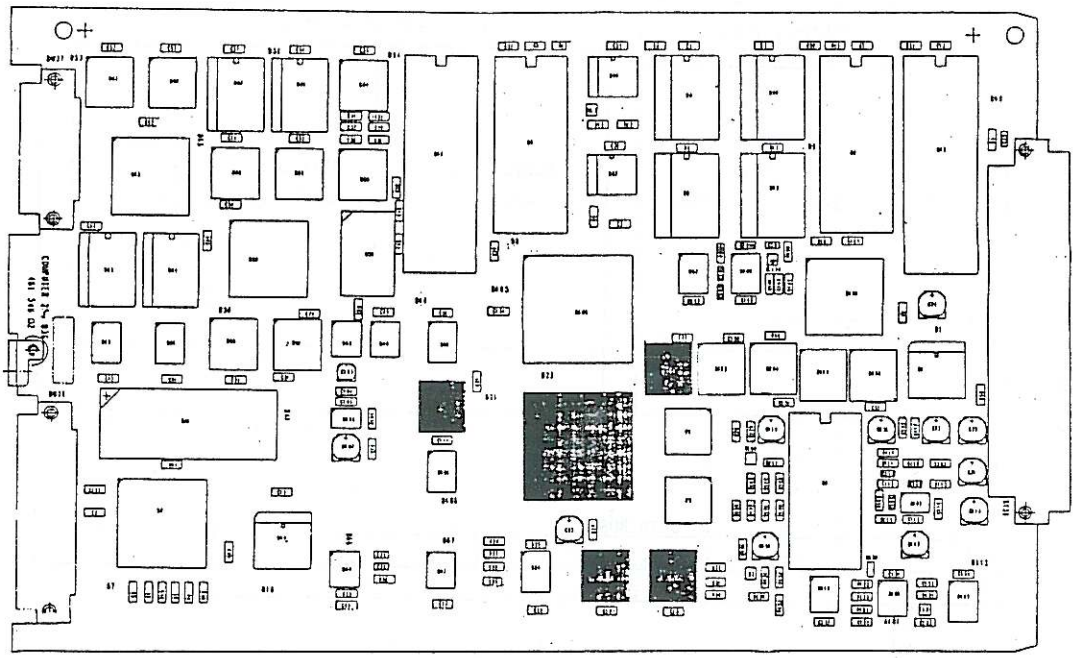

Fig. 3: Overall function control, consisting of the two units RESET and CLOCK CONTROL plus DECODER and BUS CONTROL.

RESET/CLOCK CONTROL

When the power supply is switched on and off, device A105 generates for 3.0 V ≤ Vcc ≤ 4.5 V a defined RESET and HALT signal for initializing the microprocessor and the peripherals. In the entire range Vcc ≤ 4.5 V the system memory is write-protected by controllers D26, D27. Pressing the RESET key also initializes the computer again. The clock frequency for the CPU, the clocks for timers D18 and D1 as well as for serial transfer are conditioned in D101 from the external 800-kHz signal generated by PLL-IC D100.

DECODER/BUS CONTROL

With the aid of PALs P1 and P2, the asynchronous peripherals are decoded out of the address space and the synchronous (/VPA) and asynchronous (/DTACK) CPU control is derived. Device D24 handles the decoding of the synchronous peripherals. The write/read signal of the INTEL periphery (D26-B) and the graphics-display part (D26-A) is generated by device D26. The interrupt acknowledgement and the disabling of the synchronous CPU control (/VPA) are performed by D101 and P2.

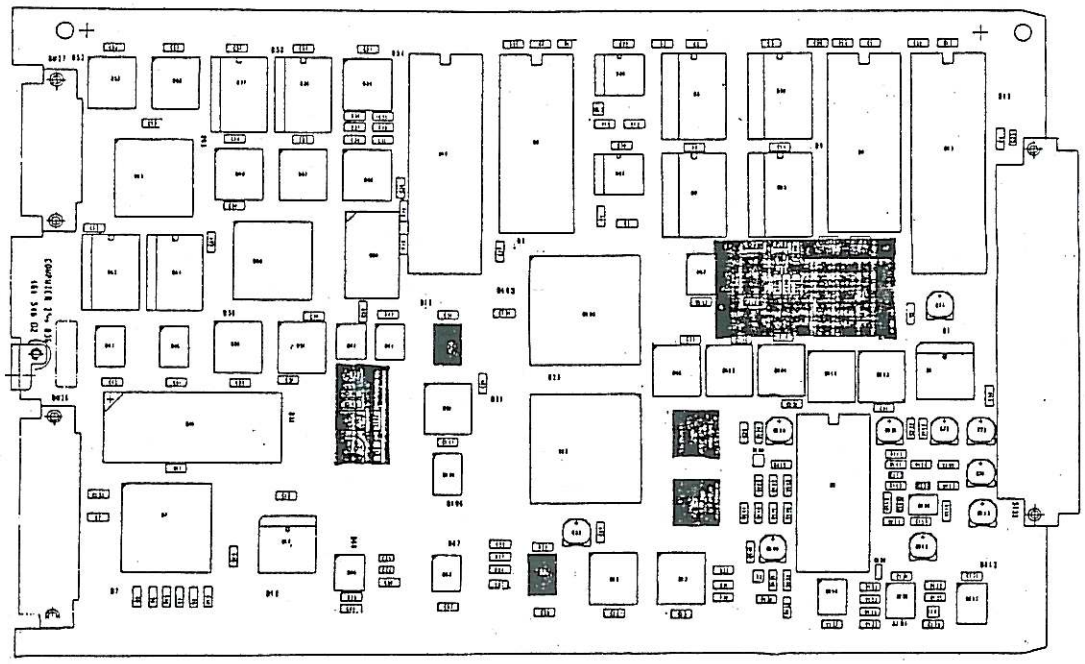

Fig. 4: Overall system memory, consisting of RAMs D2, D3, D19 and D20 as well as EPROMs D8 and D9. RAMs D2 and D3 are battery-backed by the two controllers D27 and D28 (BA1) and at power off and on also write-protected.

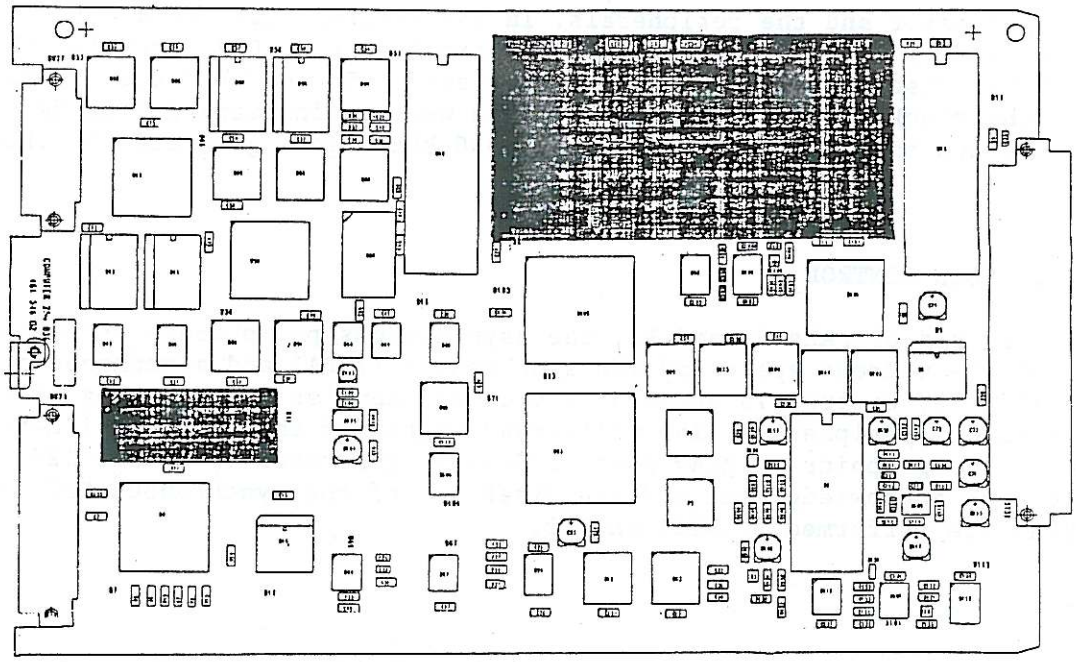

Fig. 5: Parts of system control; including the two PIAs D15 and D16, by which the individual stages of the set are driven, and device D7, containing a timer, an interrupt controller and the serial interface for the optional DATA MODULE. As options there are an output register D103 and a 4-bit input buffer D104 on the board; the latter also contains the version number of the computer board.

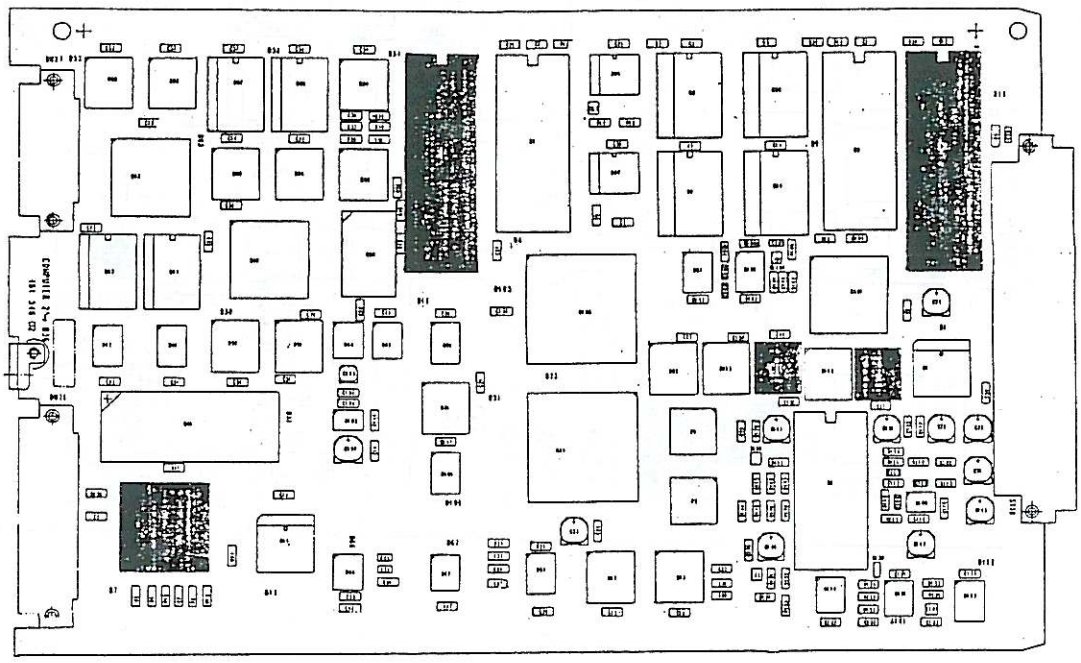

Fig. 6: AF (D1) and RF/IF counter (D18). Parts of the external logic are contained in D66 and D101 and are controlled by PIA D16.

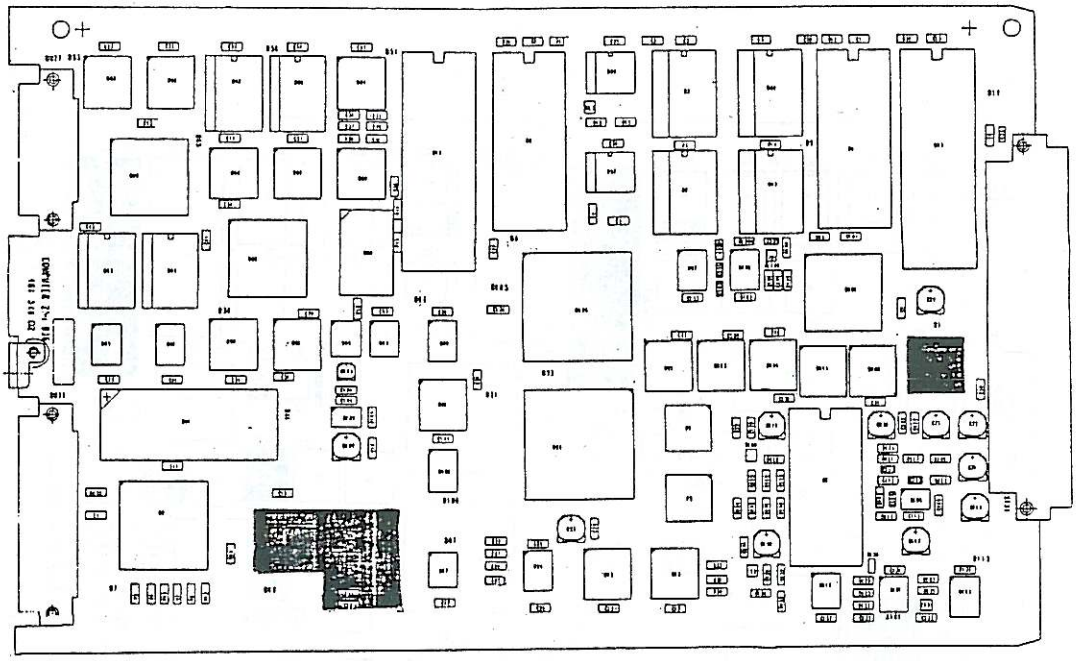

Fig. 7: Overall graphics display controller

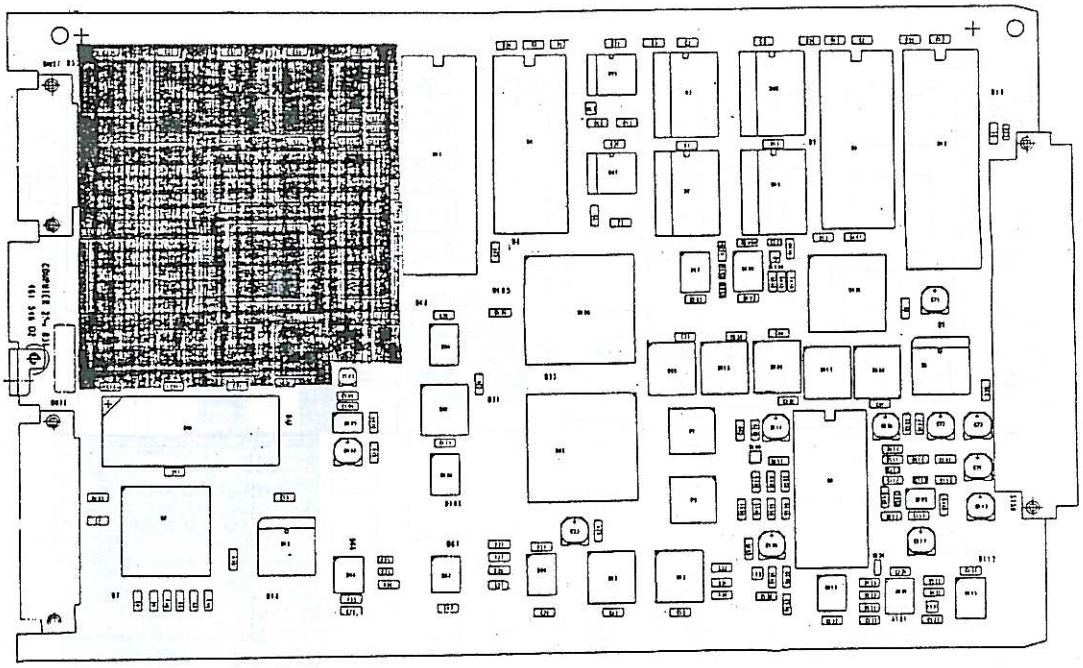

Fig. 8: Analog and DSP part of computer, consisting primarily of A/D converter A8 and a 16-bit multiplier plus accumulator.

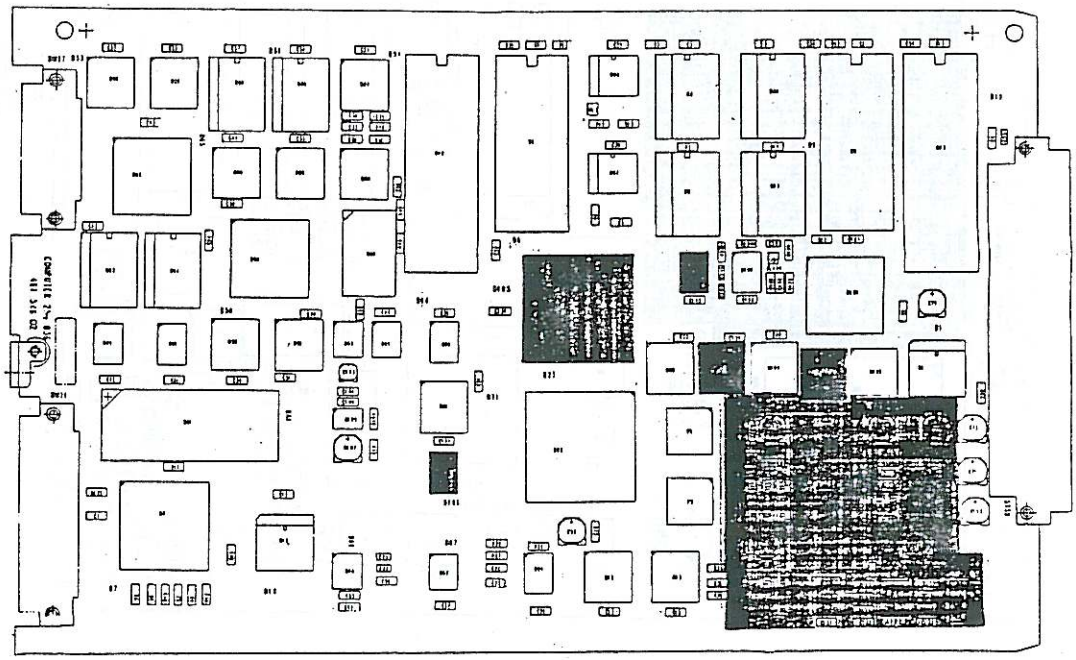

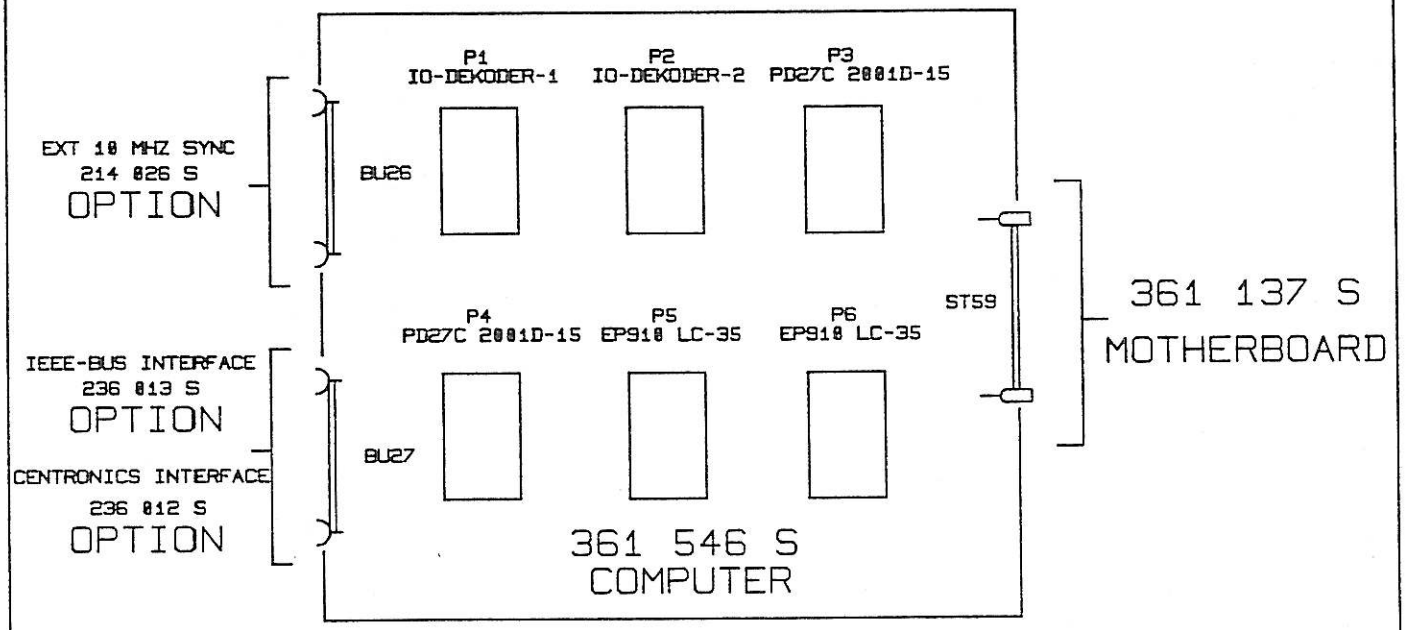

				NORM.		
				GEPR.		
00	0089.68	23.11.90	HUBER	BEARB.		
INDEX ISS.	Ä.-NR. MODIF.	DATUM DATE	NAME NAME		DATUM DATE	NAME NAME

SCHLUMBERGER TECHNOLOGIES GMBH
INGOLSTÄDTER STR.67 A
8000 MÜNCHEN 46

COMPUTER

250 036 S

GERÄT:4015/201 238

DIESE ZEICHNUNG IST UNSER EIGENTUM. VERVIELFÄLTIGUNG, UNBEFUGTE VERWERTUNG, MITTEILUNG AN ANDERE IST STRAFBAR

"D SCHADENERSATZPFLICHTIG.

1	2	3	4	5	6	7	8
Pos. REF. NO	Wert VALUE	Bezeichnung Schlumberger PART NO.	Hersteller MANUFACT	Pos. REF. NO	Wert VALUE	Bezeichnung Schlumberger PART. NO.	Hersteller MANUFACT
1	Bestückte Leiterplatte	361 546					
	hierzu	361 546 Sa					
P1	IO-Dekoder-1	893 390	STG				
P2	IO-Dekoder-2	893 395	STG				
P3	µPD 27 C 2001 D-15	893 350	STG				
P4	µPD 27 C 2001 D-15						
P5	EP 910 LC-35	893 349	STG				
P6	EP 910 LC-35	893 348	STG				

Ausgabe ISSUE	Änd.-Mitlg Nr MODIFIC. NO	Tag DATE	Name NAME
07			
06			
05			
04			
03			
02			
01			
00	0089.68	27.11.90	Kr.

Schlumberger Meßgeräte GmbH
Ingolstädter Straße 67 a
8000 München 46

1990	Tag DATE	Name NAME
geschr.	27.11.90	Kr.
bearb		
gepr.		

Schaltteilliste
EL. PARTS LIST

Benennung DESCRIPTION: COMPUTER

Bezeichnung Schlumberger PART NO: 250 036 Sa

Hierzu Schaltplan SEE CIRCUIT DIAGRAM: 250 036 S

Gerät: 4.015

Liste besteht LIST CONSISTS aus OF 1 Blatt SHEETS

Blatt Nr SHEET NO: 1

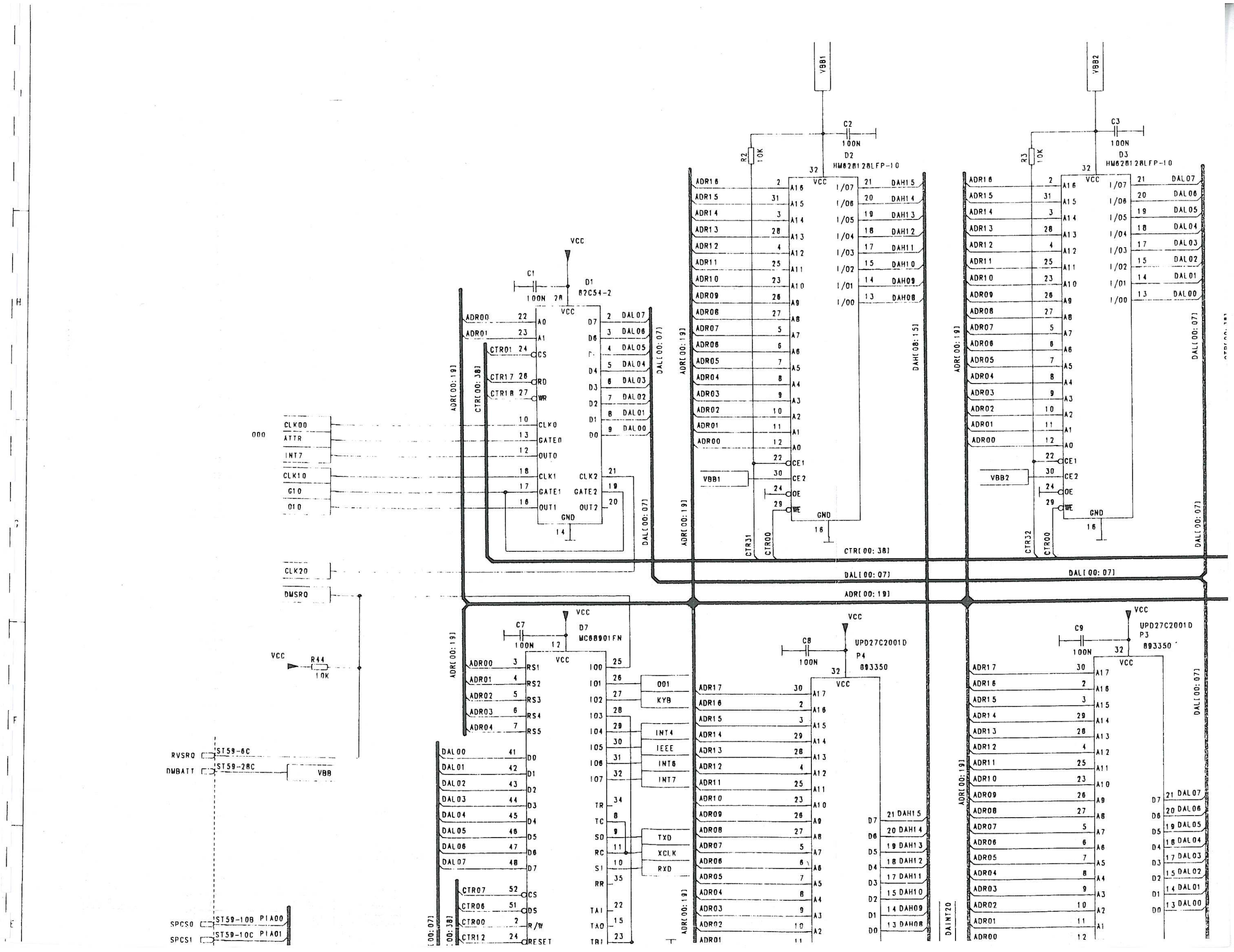

VBB1
VBB2
C2
100N
C3
100N
R2
10K
R3
10K
D2
HM62B128LFP-10
D3
HM62B128LFP-10
VCC
C1
100N
D1
82C54-2
ADR[00:19]
CTR[00:38]
DAL[00:07]
DAH[08:15]
CTR31
CTR00
CTR32
CLK00
ATTR
INT7
CLK10
G10
O10
CLK20
DMSRQ
R44
10K
RVSRQ
DMBATT
ST59-6C
ST59-28C
VBB
SPCS0
SPCS1
ST59-10B
ST59-10C
PIA00
PIA01
C7
100N
D7
MC68901FN
C8
100N
UPD27C2001D
P4
893350
C9
100N
UPD27C2001D
P3
893350
DAINT20
001
KYB
INT4
IEEE
INT6
INT7
TXD
XCLK
RXD

VBB
R12 100
R10 820
BAT54
GL2
C29 100N
VCC
D28 DS1210S
VCC1 VBAT1 VBAT2 CE1 TOL GND VCCO CEO
VBB2
CTR03
R9 820
BAT54
GL1
C30 100N
D27 DS1210S
VBB1
CTR32
CTR31
CTR02
BA1 2.4V
DAINT[00:23]
DAINT23 R25 4.7K
DAINT22 R26 4.7K
DAINT21 R27 4.7K
DAINT20 R28 4.7K
R34 10K
DAINT15 R30 4.7K
DAINT14 R31 4.7K
DAINT13 R32 4.7K
DISVPA
ROOPTERS
OC-TEST
C27 100N
P2 PALCE16V8H-15JC
CTR[00:38]
CTR07 D7-CS
CTR38 EMOUT
CTR37 ENIN
CTR33 DTACKO
CTR29 VPA
CTR22 DTACKI
DISVPA
IO2 IO1 ROV SO1 ENO ENI DTO VPA DTI DVP
A23 A22 A21 A20 A14 A13 AS LDS
DAINT23 DAINT22 DAINT21 DAINT20 ADR14 ADR13
ADR[00:19]
C28 100N
P1 PALCE16V8H-15JC
DAINT23 DAINT22 DAINT21 DAINT20
A23 A22 A21 A20 A17 A15 A14 A13 UDS LDS
UNIDEC ELD RM1L RM0L RM1U RM0U EP-L EP-U
CTR05 CTR04 CTR20 CTR03 CTR19 CTR02 CTR09 CTR08
ADR14 ADR13 CTR26 CTR06
OPT2 OPT0 OPT1
C26 100N
D24 74ACT138SC
Y7 Y6 Y5 Y4 Y3 Y2 Y1 Y0
CTR28 CS-D18 CTR16 CS-D16 CTR15 CS-D15 CTR01 CS-D1
DAINT20 DAINT21 DAINT22 DAINT23
CTR27 CTR26 CTR06 CTR00 CTR25
C23 47U
C24 100N
D23 MC68000FN8
VMA R/W LDS UDS AS
DAINT01 DAINT02 DAINT03 DAINT04 DAINT05 DAINT06 DAINT07 DAINT08 DAINT09 DAINT10 DAINT11 DAINT12 DAINT13 DAINT14 DAINT15 DAINT16
RESET BG BGACK BR VPA E
CTR12 CTR29 CTR24
CTR27 /AS
CTR23 RESINT
CTR05 UNIDEC
CTR12 /RESINT
CTR24 E
ADR17 R29 4.7K
ADR15 S5-1 S5-2
ADR17 S6-1 S6-2
ENTWEDER RAM: 256KBIT
ODER RAM: 1MBIT
C12 100N
D12 SN74LS645DW
C13 100N
D13 SN74LS645DW
ADR04 ADR03 ADR02 ADR01 ADR00 ADR05 ADR06 ADR07
ADR08 ADR09 ADR10 ADR11 ADR12 ADR13
DAINT05 DAINT04 DAINT03 DAINT02 DAINT01 DAINT06 DAINT07 DAINT08
DAINT09 DAINT10 DAINT11 DAINT12 DAINT13 DAINT14
DIR ENG
R51 330

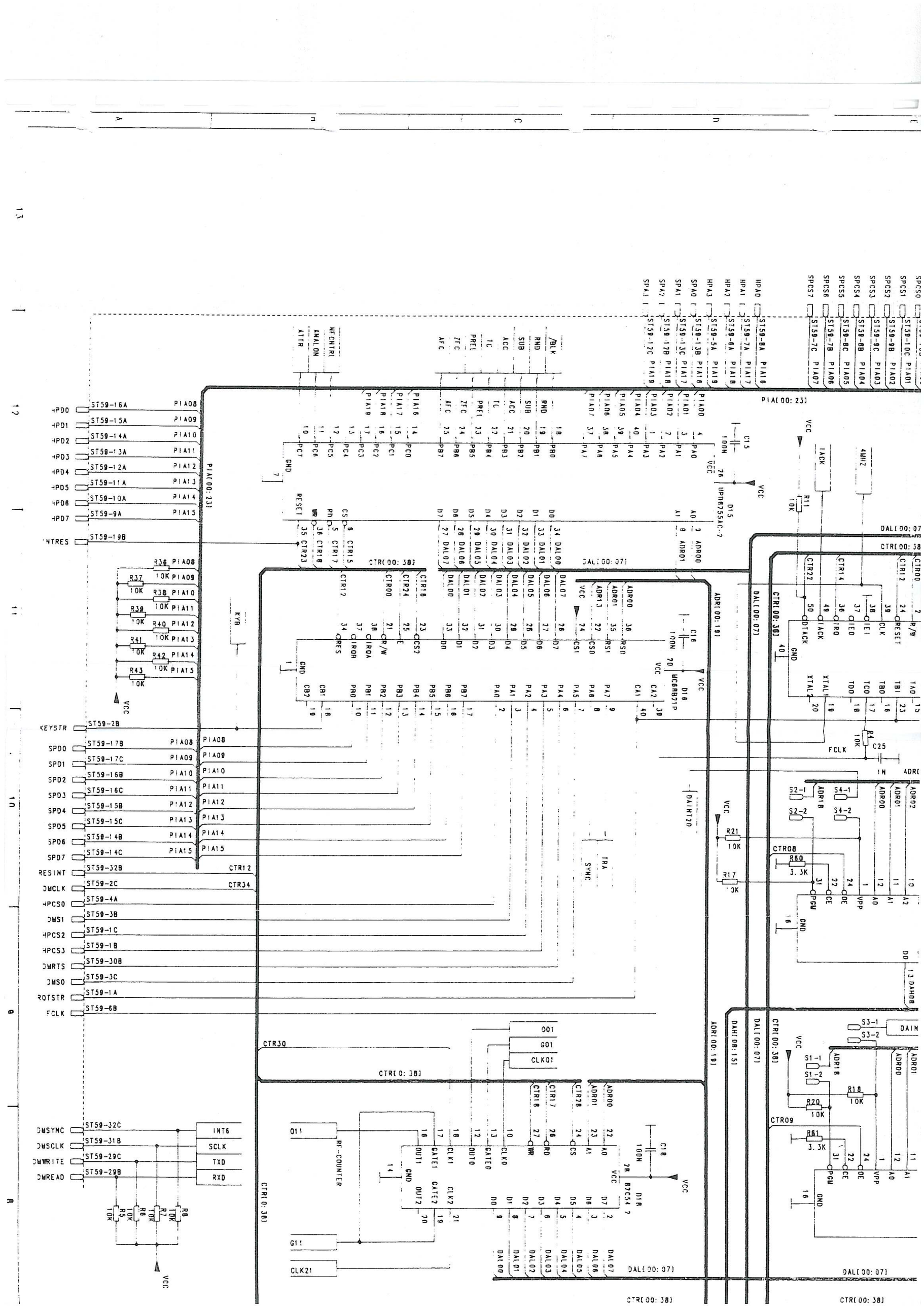

PIA[00:23]
CTR[00:38]
DAL[00:07]
ADR[00:19]
DAH[08:15]
KEYSTR
SPD0
SPD1
SPD2
SPD3
SPD4
SPD5
SPD6
SPD7
RESINT
DMCLK
HPCS0
DMS1
HPCS2
HPCS3
DMRTS
DMS0
ROTSTR
FCLK
DMSYNC
DMSCLK
DMWRITE
DMREAD
INT6
SCLK
TXD
RXD
RF-COUNTER
VCC
GND

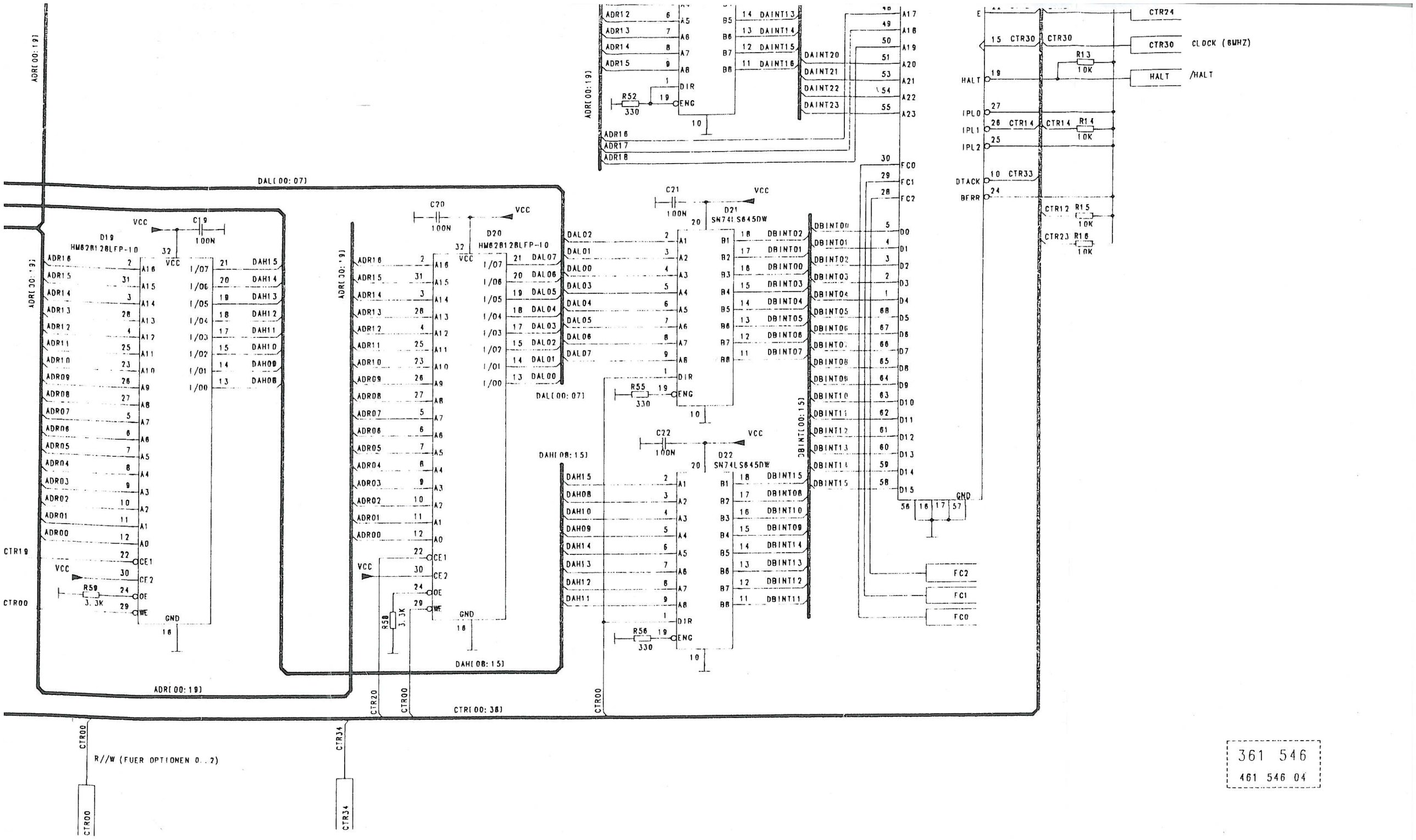

361 546
461 546 04

05	1089.62	22.07.91	VARGA	DESIGNED			SCHLUMBERGER TECHNOLOGIES GMBH INGOLSTÄDTER STR. 67A 8000 MÜNCHEN 46	BEZEICHNUNG/DESCRIPTION: COMPUTER
04	1089.13	04.02.91	GRI.	CHECKED	13.07.91	VARGA		ZEICHNUNGSNR./DRAWING NO.: 361 546 S
03	0089.61	05.11.90	Kr.	DRAWN				PROJECT/GROUP: 4015 / 250 038 S
INDEX ISS.	Ä.-NR. MODIF.	DATUM DATE	NAME NAME		DATUM DATE	NAME NAME		

DIESE ZEICHNUNG IST UNSER EIGENTUM. VERVIELFÄLTIGUNG, UNBEFUGTE VERWERTUNG, MITTEILUNG AN ANDERE IST STRAFBAR UND SCHADENERSATZ

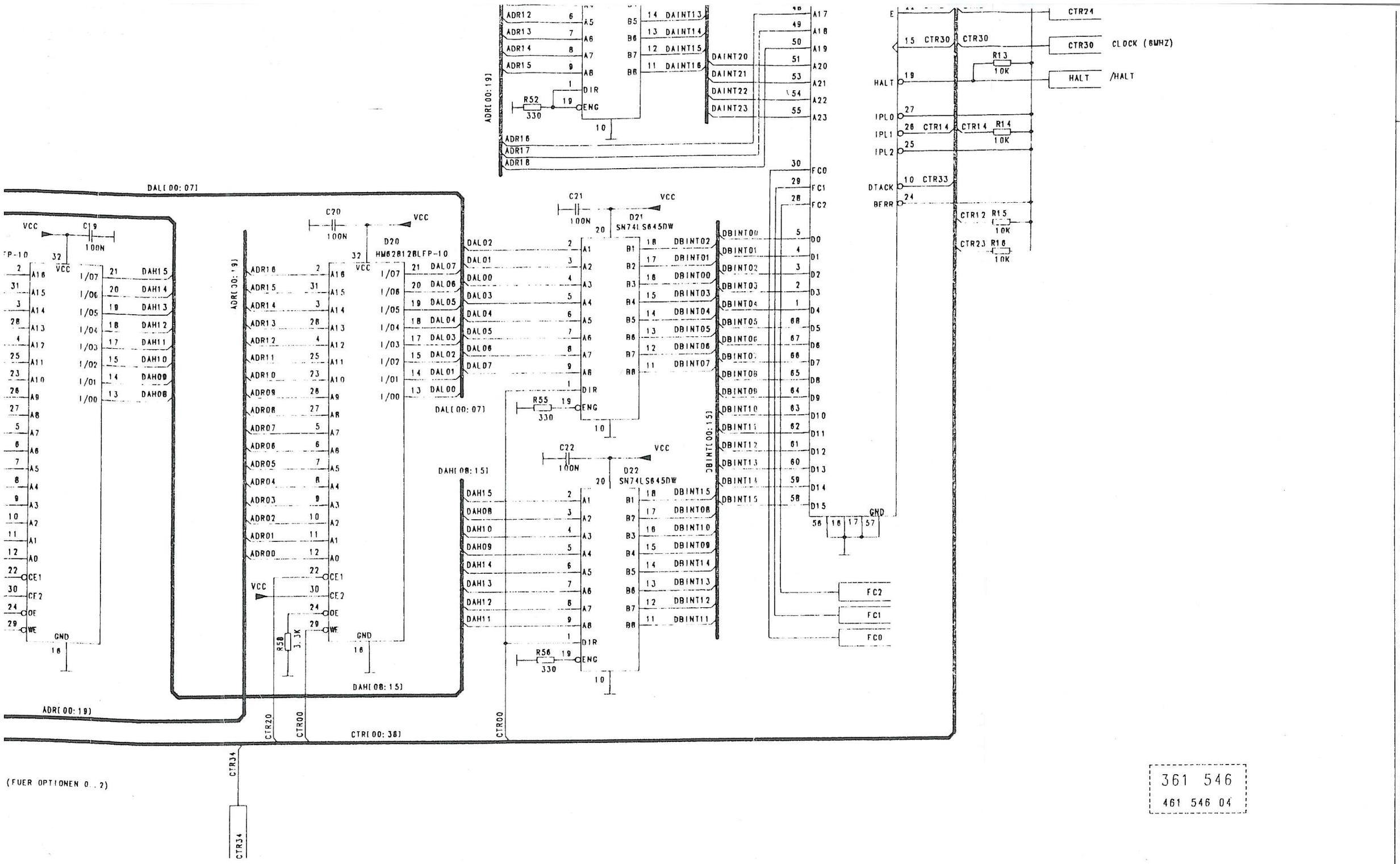

361 546
461 546 04

05	1089.02	22.07.91	VARGA	DESIGNED			SCHLUMBERGER TECHNOLOGIES GMBH INGOLSTÄDTER STR. 67A 8000 MÜNCHEN 46
04	1089.13	04.02.91	GRI.	CHECKED	13.07.91	VARGA	BEZEICHNUNG/DESCRIPTION: COMPUTER
03	0089.01	05.11.90	Kr.	DRAWN			ZEICHNUNGSNR./DRAWING NO.: 361 546 S
INDEX ISS.	Ä.-NR. MODIF.	DATUM DATE	NAME NAME		DATUM DATE	NAME NAME	PROJECT/GROUP: 4015 / 250 038 S

1 VON/OF 3 BLATT SHEET

This drawing is the property of SCHLUMBERGER. Reproduction unauthorized - use, communication to a third party is liable to prosecution and liable for damages.

DIESE ZEICHNUNG IST UNSER EIGENTUM. VERVIELFÄLTIGUNG, UNBEFUGTE VERWERTUNG, MITTEILUNG AN ANDERE IST STRAFBAR UND SCHADENERSATZPFLICHTIG.

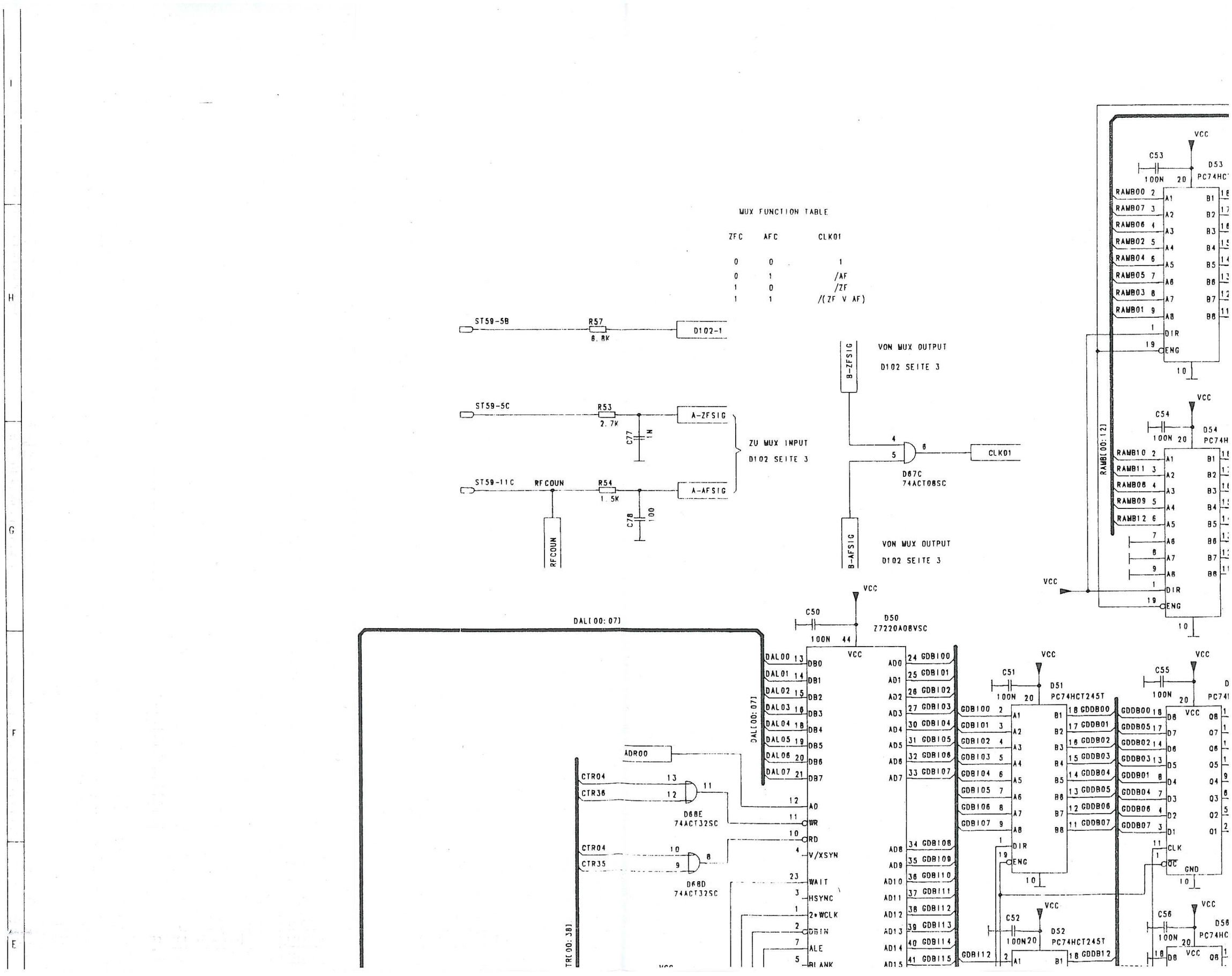
MUX FUNCTION TABLE
ZFC AFC CLK01
0 0 1
0 1 /AF
1 0 /ZF
1 1 /(ZF V AF)
ST59-5B
R57
6.8K
D102-1
ST59-5C
R53
2.7K
C77
1N
A-ZFSIG
ZU MUX INPUT
D102 SEITE 3
ST59-11C
RFCOUN
R54
1.5K
C78
100
A-AFSIG
RFCOUN
B-ZFSIG
VON MUX OUTPUT
D102 SEITE 3
D67C
74ACT08SC
CLK01
B-AFSIG
VON MUX OUTPUT
D102 SEITE 3
VCC
C53
100N
D53
PC74HC
RAMB00
RAMB07
RAMB06
RAMB02
RAMB04
RAMB05
RAMB03
RAMB01
DIR
ENG
C54
100N
D54
PC74H
RAMB10
RAMB11
RAMB08
RAMB09
RAMB12
RAMB[00:12]
C50
100N
D50
Z7220A08VSC
DAL[00:07]
DAL00
DAL01
DAL02
DAL03
DAL04
DAL05
DAL06
DAL07
DB0
DB1
DB2
DB3
DB4
DB5
DB6
DB7
A0
WR
RD
V/XSYN
WAIT
HSYNC
2*WCLK
DBIN
ALE
BLANK
AD0
AD1
AD2
AD3
AD4
AD5
AD6
AD7
AD8
AD9
AD10
AD11
AD12
AD13
AD14
AD15
GDB100
GDB101
GDB102
GDB103
GDB104
GDB105
GDB106
GDB107
GDB108
GDB109
GDB110
GDB111
GDB112
GDB113
GDB114
GDB115
ADR00
CTR04
CTR36
D68E
74ACT32SC
CTR04
CTR35
D68D
74ACT32SC
C51
100N
D51
PC74HCT245T
C52
100N
D52
PC74HCT245T
GDB112
GDDB00
GDDB01
GDDB02
GDDB03
GDDB04
GDDB05
GDDB06
GDDB07
C55
100N
C56
100N
D56
PC74HC
CLK
GND
TR[00:38]

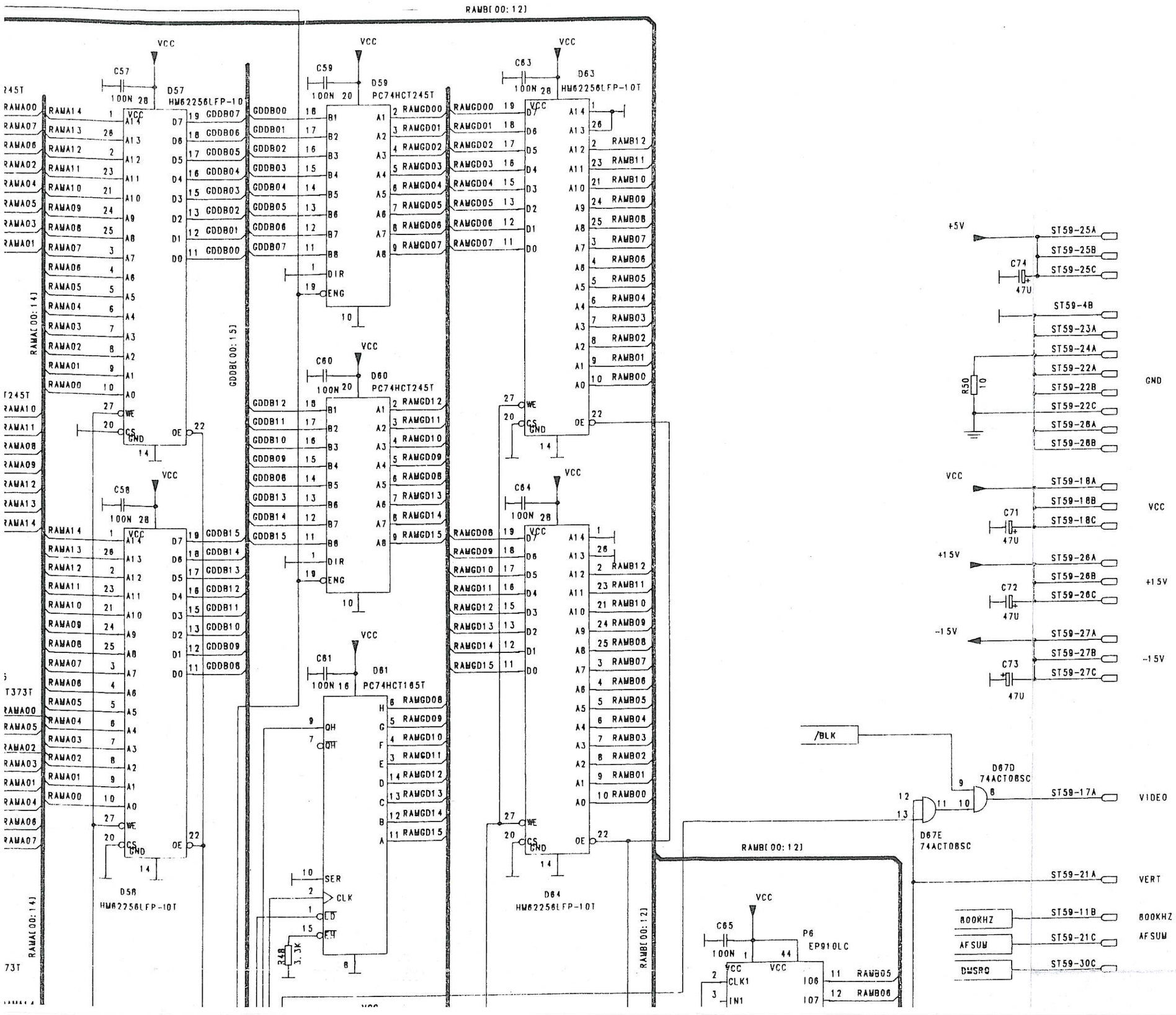
RAMB[00:12]
VCC
C57
100N
D57
HM62256LFP-10
C59
100N
D59
PC74HCT245T
C63
100N
D63
HM62256LFP-10T
C60
100N
D60
PC74HCT245T
C58
100N
D58
HM62256LFP-10T
C61
100N
D61
PC74HCT165T
C64
100N
D64
HM62256LFP-10T
RAMA[00:14]
GDDB[00:15]
RAMB[00:12]
C65
100N
P6
EP910LC
R48
3.3K
+5V
C74
47U
ST59-25A
ST59-25B
ST59-25C
ST59-4B
ST59-23A
ST59-24A
ST59-22A
ST59-22B
ST59-22C
ST59-28A
ST59-28B
R50
10
GND
VCC
C71
47U
ST59-18A
ST59-18B
ST59-18C
VCC
+15V
C72
47U
ST59-26A
ST59-26B
ST59-26C
+15V
-15V
C73
47U
ST59-27A
ST59-27B
ST59-27C
-15V
/BLK
D67D
74ACT08SC
D67E
74ACT08SC
ST59-17A
VIDEO
ST59-21A
VERT
800KHZ
AFSUM
DMSRQ
ST59-11B
ST59-21C
ST59-30C
800KHZ
AFSUM

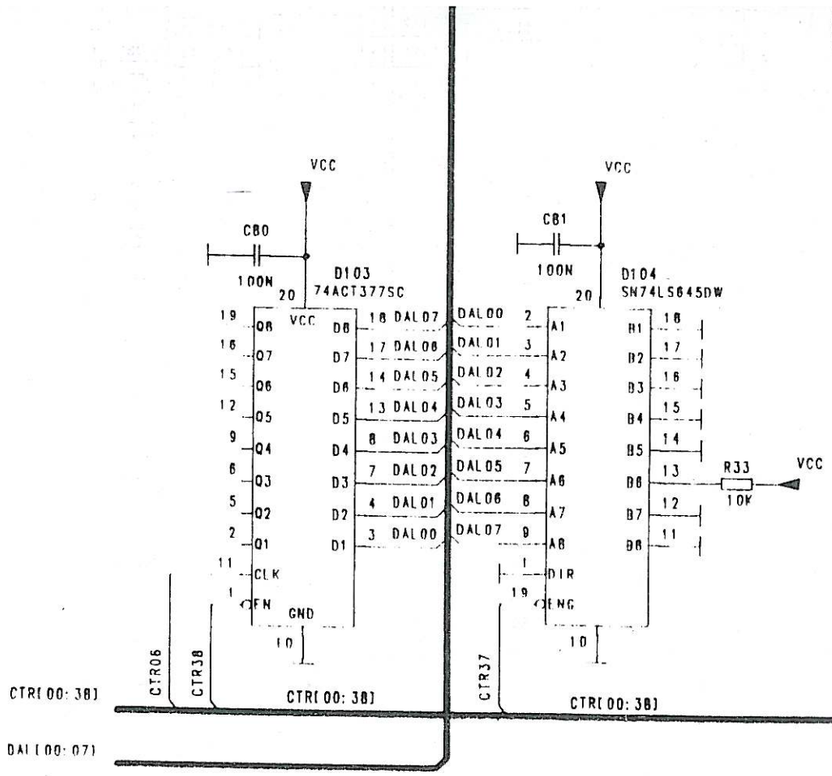
C80
100N
VCC
D103
74ACT377SC
Q8 Q7 Q6 Q5 Q4 Q3 Q2 Q1 CLK EN
D8 D7 D6 D5 D4 D3 D2 D1
DAL07 DAL06 DAL05 DAL04 DAL03 DAL02 DAL01 DAL00
GND
C81
100N
D104
SN74LS645DW
A1 A2 A3 A4 A5 A6 A7 A8 DIR ENG
B1 B2 B3 B4 B5 B6 B7 B8
R33
10K
CTR[00:38]
CTR06
CTR38
CTR37
DAL[00:07]

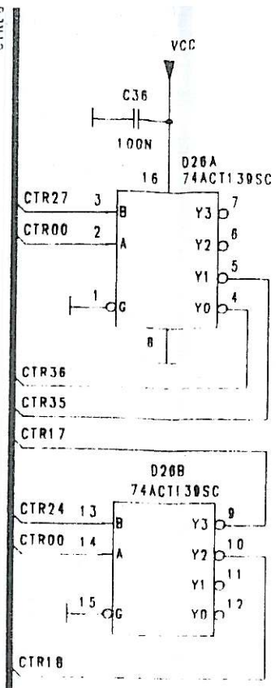
C36
100N
VCC
D26A
74ACT139SC
CTR27
CTR00
Y3 Y2 Y1 Y0
CTR36
CTR35
CTR17
D26B
74ACT139SC
CTR24
CTR00
CTR18
CTR[0

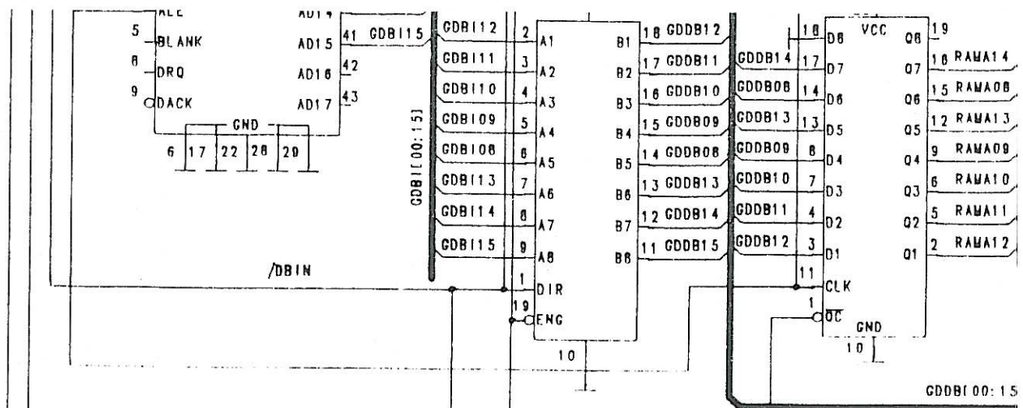
BLANK
DRQ
DACK
GND
AD15
AD16
AD17
GDBI15
GDBI12
GDBI11
GDBI10
GDBI09
GDBI08
GDBI13
GDBI14
GDBI15
GDBI[00:15]
/DBIN
DIR
ENG
GDDB12
GDDB11
GDDB10
GDDB09
GDDB08
GDDB13
GDDB14
GDDB15
GDDB[00:15]
CLK
OC
RAMA14
RAMA08
RAMA13
RAMA09
RAMA10
RAMA11
RAMA12

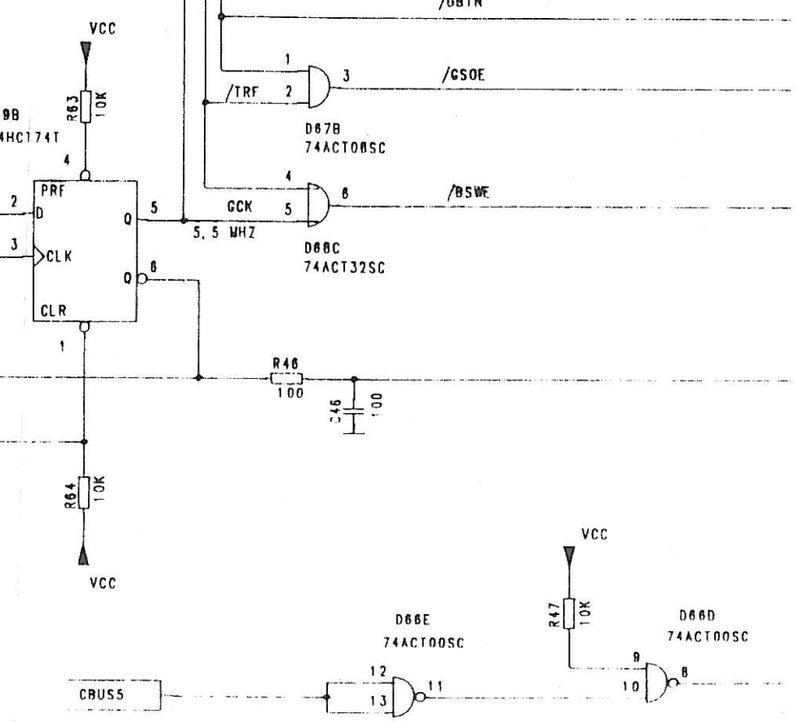
D66B
74ACT00SC
/DBIN
/TRF
/CSOE
D67B
74ACT08SC
/BSWE
D66C
74ACT32SC
GCK
5, 5 MHZ
R62
10K
R63
10K
D69B
PC74HC174T
D69C
PC74HCT74T
PRE
CLK
CLR
R46
100
C46
100
R64
10K
11 MHZ
VCC
CBUS5
D66E
74ACT00SC
D66D
74ACT00SC
R47
10K

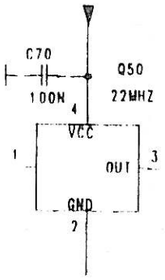
C70
100N
Q50
22MHZ
VCC
OUT
GND

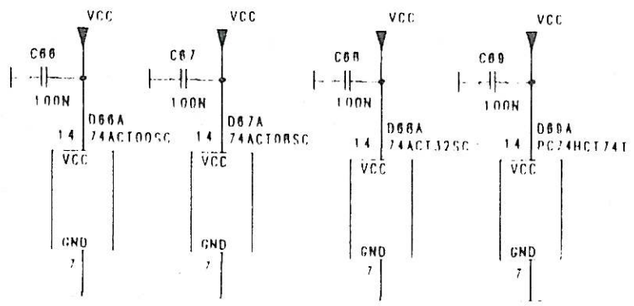
C66
C67
C68
C69
100N
D66A
74ACT00SC
D67A
74ACT08SC
D68A
74ACT32SC
D69A
PC74HCT74T
VCC
GND

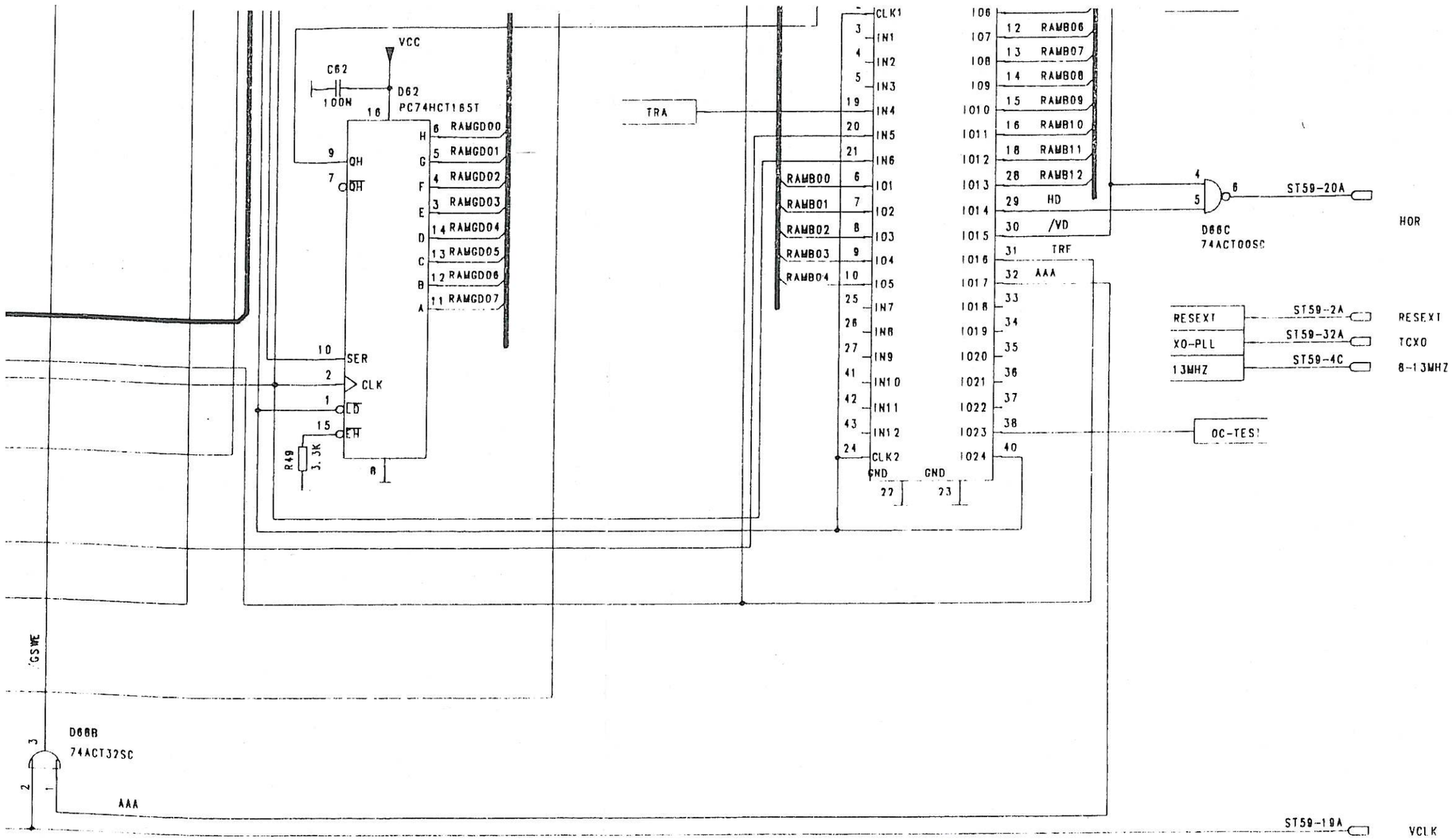

05	1089.02	22.07.91	VARGA	DESIGNED			SCHLUMBERGER TECHNOLOGIES GMBH INGOLSTÄDTER STR. 67A 8000 MÜNCHEN 46
04	1089.13	04.02.91	GRI.	CHECKED	13.07.91	VARGA	
03	0089.81	05.11.90	Kr.	DRAWN	25.04.89	FLE.	
INDEX ISS.	Ä.-NR. MODIF.	DATUM DATE	NAME NAME		DATUM DATE	NAME NAME	

BEZEICHNUNG/DESCRIPTION: COMPUTER

ZEICHNUNGSNR. /DRAWING N: 361 546

PROJECT/GROUP: 4015 / 250 036 S

DIESE ZEICHNUNG IST UNSER EIGENTUM. VERVIELFÄLTIGUNG, UNBEFUGTE VERWERTUNG, MITTEILUNG AN ANDERE IST STRAFBAR UND SCHADENE

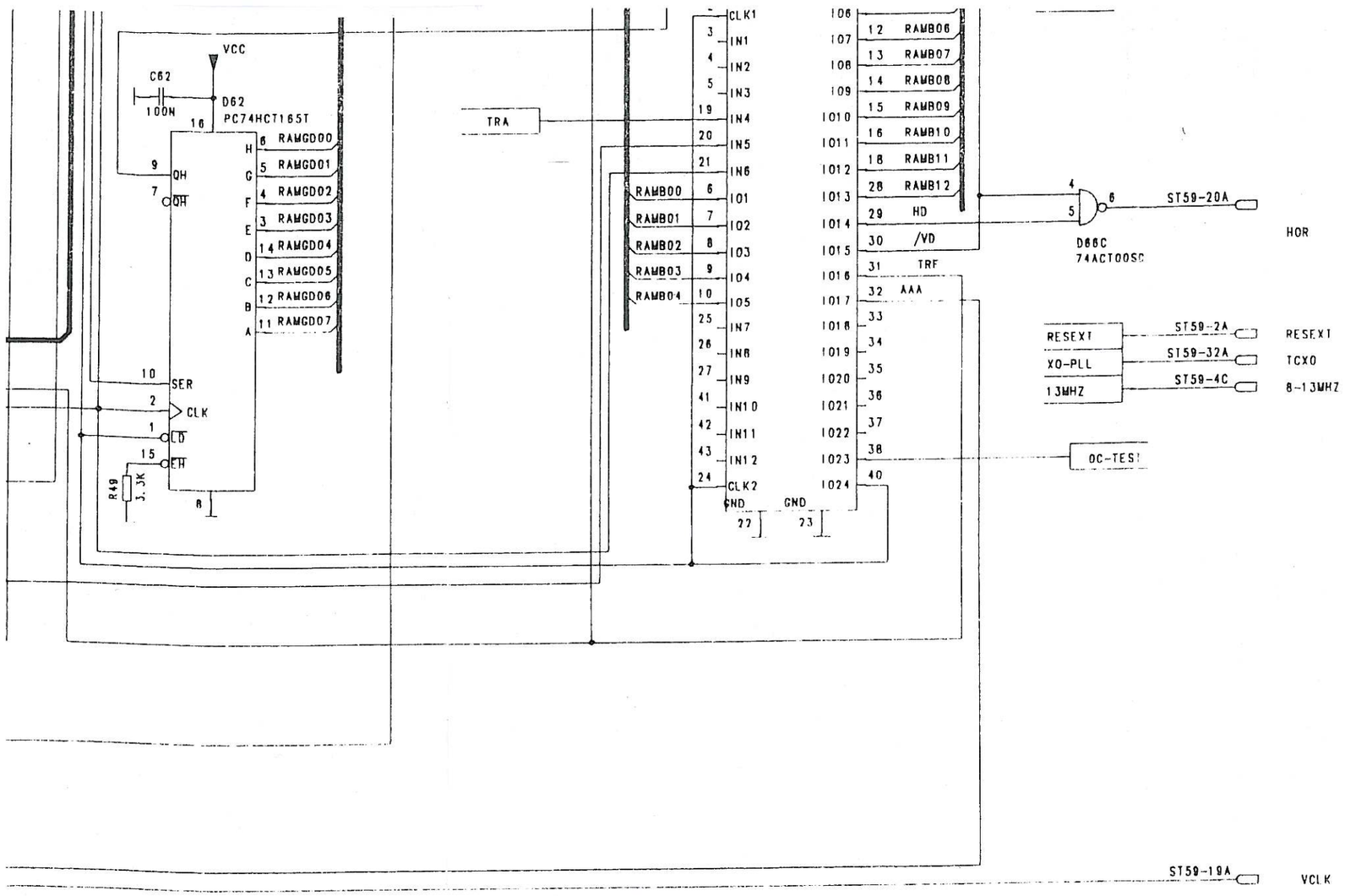

05	1089.02	22.07.91	VARGA	DESIGNED			SCHLUMBERGER TECHNOLOGIES GMBH INGOLSTÄDTER STR. 67A 8000 MÜNCHEN 46	BEZEICHNUNG/DESCRIPTION: COMPUTER	ZEICHNUNGSNR. /DRAWING NO.: 361 546 S
04	1089.13	04.02.91	GRI.	CHECKED	13.07.91	VARGA			PROJECT/GROUP: 4015 / 250 038 S
03	0089.61	05.11.90	Kr.	DRAWN	25.04.89	FLE.			
INDEX ISS.	Å.-NR. MODIF.	DATUM DATE	NAME NAME		DATUM DATE	NAME NAME			

2 VON/OF 3 BLATT SHEET

This drawing is the property of SCHLUMBERGER. Reproduction, unauthorized use, communication to a third party is liable to prosecution and liable for damages.

DIESE ZEICHNUNG IST UNSER EIGENTUM. VERVIELFÄLTIGUNG, UNBEFUGTE VERWERTUNG, MITTEILUNG AN ANDERE IST STRAFBAR UND SCHADENERSATZPFLICHTIG.

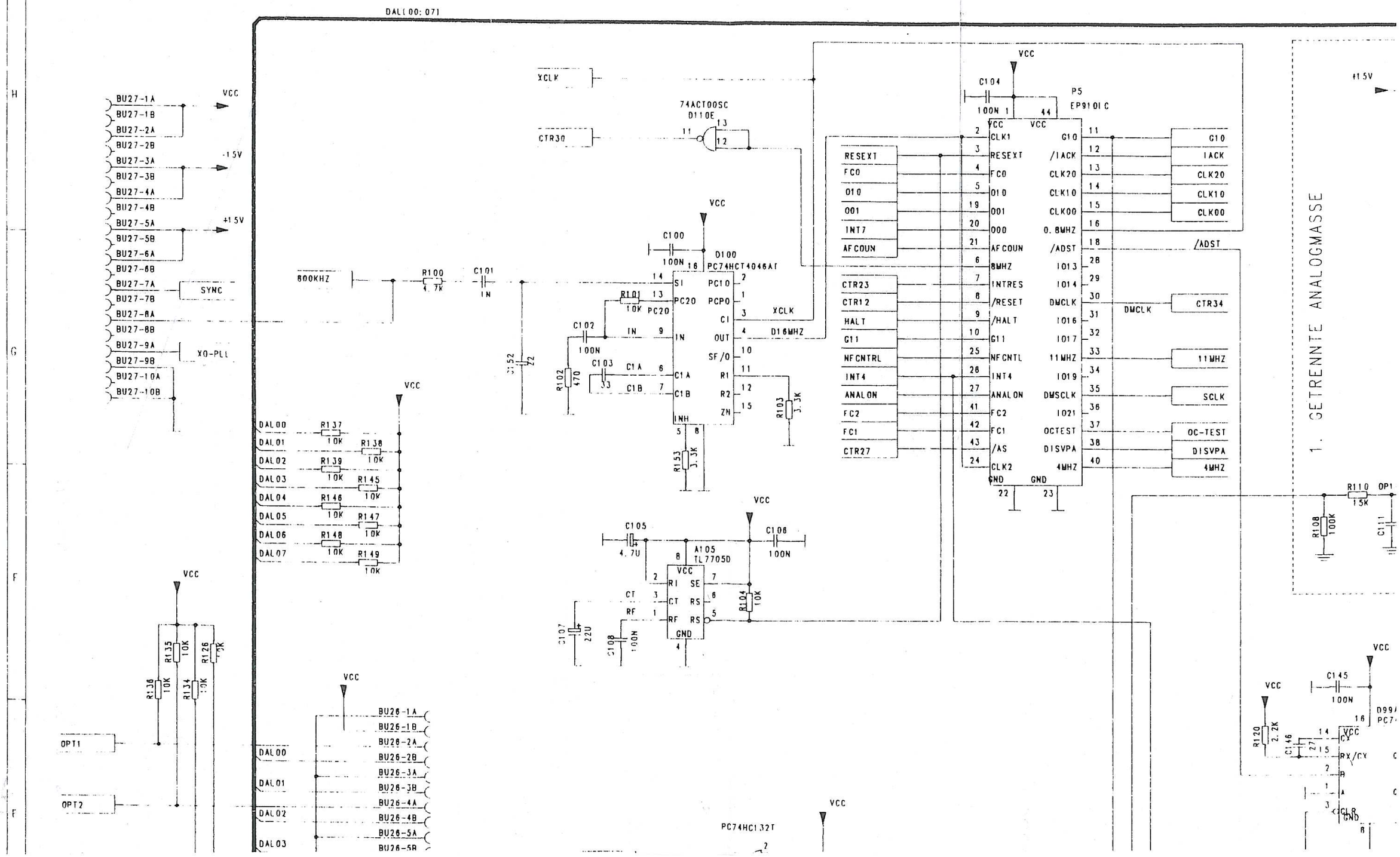

DAL[00:07]
BU27-1A
BU27-1B
BU27-2A
BU27-2B
BU27-3A
BU27-3B
BU27-4A
BU27-4B
BU27-5A
BU27-5B
BU27-6A
BU27-6B
BU27-7A
BU27-7B
BU27-8A
BU27-8B
BU27-9A
BU27-9B
BU27-10A
BU27-10B
VCC
-15V
+15V
SYNC
XO-PLL
XCLK
CTR30
74ACT00SC
D110E
800KHZ
R100
4.7K
C101
1N
C100
100N
D100
PC74HCT4046AT
R101
10K
C102
100N
C103
33
R102
470
C152
22
XCLK
D16MHZ
R103
3.3K
R153
3.3K
DAL00
DAL01
DAL02
DAL03
DAL04
DAL05
DAL06
DAL07
R137
R138
R139
R145
R146
R147
R148
R149
10K
C104
100N
P5
EP9101C
RESEXT
FC0
010
001
INT7
AFCOUN
CTR23
CTR12
HALT
G11
NFCNTRL
INT4
ANALON
FC2
FC1
CTR27
CLK1
RESEXT
FC0
010
001
000
AFCOUN
8MHZ
INTRES
/RESET
/HALT
G11
NFCNTL
INT4
ANALON
FC2
FC1
/AS
CLK2
GND
G10
/IACK
CLK20
CLK10
CLK00
0.8MHZ
/ADST
IO13
IO14
DMCLK
IO16
IO17
11MHZ
IO19
DMSCLK
IO21
OCTEST
DISVPA
4MHZ
G10
IACK
CLK20
CLK10
CLK00
/ADST
DMCLK
CTR34
11MHZ
SCLK
OC-TEST
DISVPA
4MHZ
1. GETRENNTE ANALOGMASSE
+15V
R110
15K
R108
100K
C111
C105
4.7U
A105
TL7705D
C106
100N
R104
10K
C107
22U
C108
100N
R135
R126
R136
R134
OPT1
OPT2
BU26-1A
BU26-1B
BU26-2A
BU26-2B
BU26-3A
BU26-3B
BU26-4A
BU26-4B
BU26-5A
BU26-5B
PC74HC132T
C145
100N
R120
2.2K
C146
27

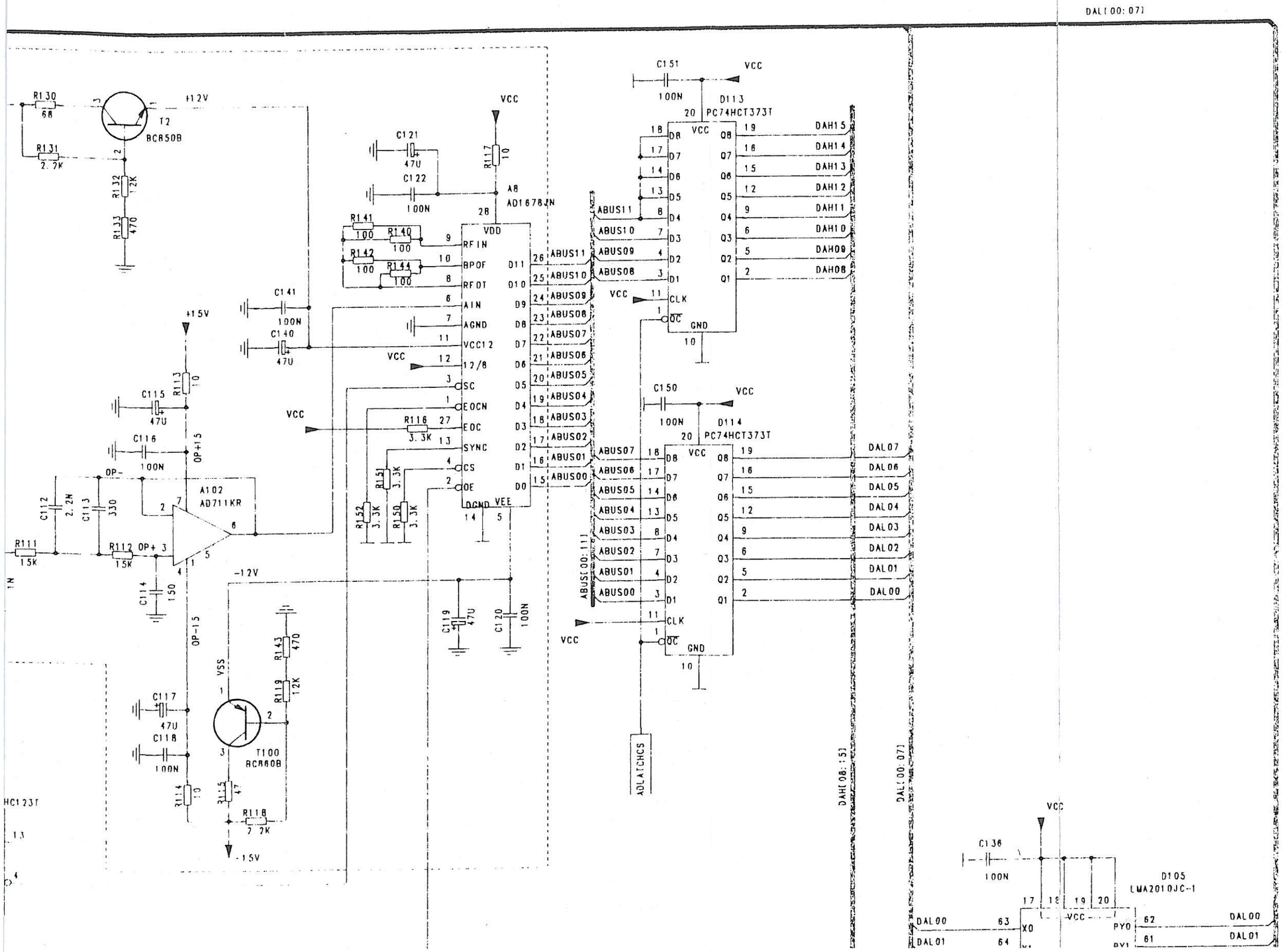
DAL[00:07]
R130
68
T2
BC850B
+12V
R131
2.2K
R132
12K
R133
470
C121
47U
C122
100N
R117
10
A8
AD1678JN
VDD
RFIN
BPOF
RFOT
AIN
AGND
VCC12
12/8
SC
EOCN
EOC
SYNC
CS
OE
DGND
VEE
R141
100
R140
100
R142
100
R144
100
C141
100N
C140
47U
+15V
R113
10
C115
47U
C116
100N
OP+15
OP-
A102
AD711KR
C112
2.2N
C113
330
R111
15K
R112
15K
OP+
C114
150
-12V
OP-15
R116
3.3K
R151
3.3K
R152
3.3K
R150
3.3K
C119
47U
C120
100N
R143
470
R119
12K
VSS
T100
BC860B
C117
47U
C118
100N
R114
10
R115
47
R118
2.2K
-15V
HC123T
C151
100N
D113
PC74HCT373T
C150
100N
D114
PC74HCT373T
ABUS11
ABUS10
ABUS09
ABUS08
ABUS07
ABUS06
ABUS05
ABUS04
ABUS03
ABUS02
ABUS01
ABUS00
ABUS[00:11]
CLK
OC
GND
ADLATCHCS
DAH15
DAH14
DAH13
DAH12
DAH11
DAH10
DAH09
DAH08
DAL07
DAL06
DAL05
DAL04
DAL03
DAL02
DAL01
DAL00
DAH[08:15]
DAL[00:07]
C136
100N
D105
LMA2010JC-1
X0
PY0
PY1

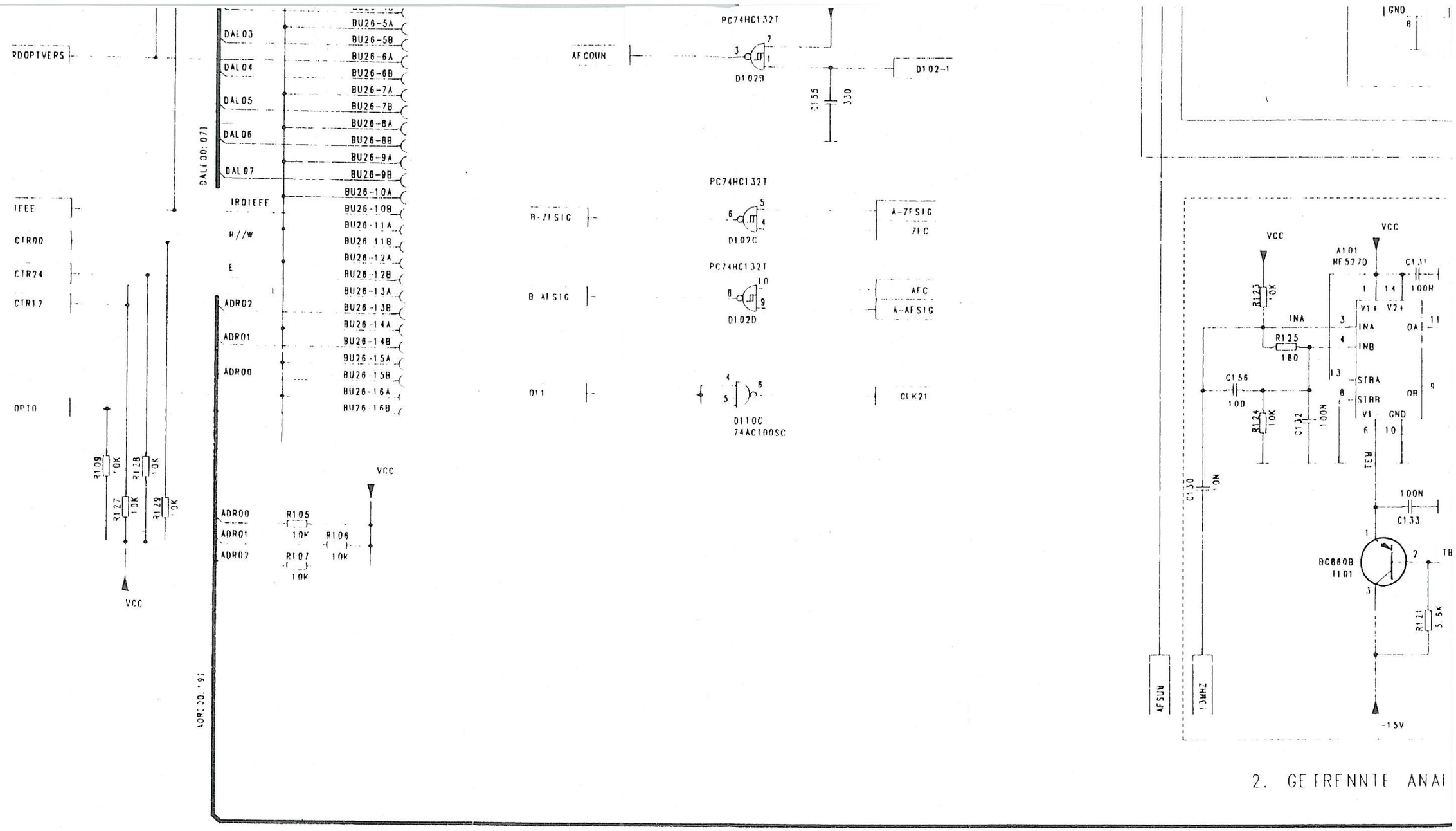
RDOPTVERS
IFEE
CTR00
CTR24
CTR12
OPT0
R109 10K
R128 10K
R127 10K
R129 10K
VCC
DAL03
DAL04
DAL05
DAL06
DAL07
DAL[00:07]
IRQIEEE
R//W
E
ADR02
ADR01
ADR00
BU26-5A
BU26-5B
BU26-6A
BU26-6B
BU26-7A
BU26-7B
BU26-8A
BU26-8B
BU26-9A
BU26-9B
BU26-10A
BU26-10B
BU26-11A
BU26 11B
BU26-12A
BU26-12B
BU26-13A
BU26-13B
BU26-14A
BU26-14B
BU26-15A
BU26 15B
BU26-16A
BU26 16B
ADR00
ADR01
ADR02
R105 10K
R106 10K
R107 10K
VCC
ADR[00:19]
AFCOUN
PC74HC132T
D102B
C155 330
D102-1
B-ZFSIG
PC74HC132T
D102C
A-ZFSIG
ZFC
B AFSIG
PC74HC132T
D102D
AFC
A-AFSIG
011
D110C
74ACT00SC
CLK21
GND
A101
NF527D
C131
100N
R123 10K
INA
R125 180
C156 100
R124 10K
C132 100N
V1+
V2+
INB
STBA
STBB
V1-
GND
C130 10N
100N
C133
BC860B
T101
R121 5.6K
-15V
AFSUN
13MHZ
2. GETRENNTE ANAL
C137 100N
D110A
74AC100SC
C139 100N
D112A
PC74HCT112T
C153 470
C154 100N
D102A
PC74HC132T
D99B
PC74HC123T
D112B
PC74HCT112T
D102E
PC74HC132T
10
9
8

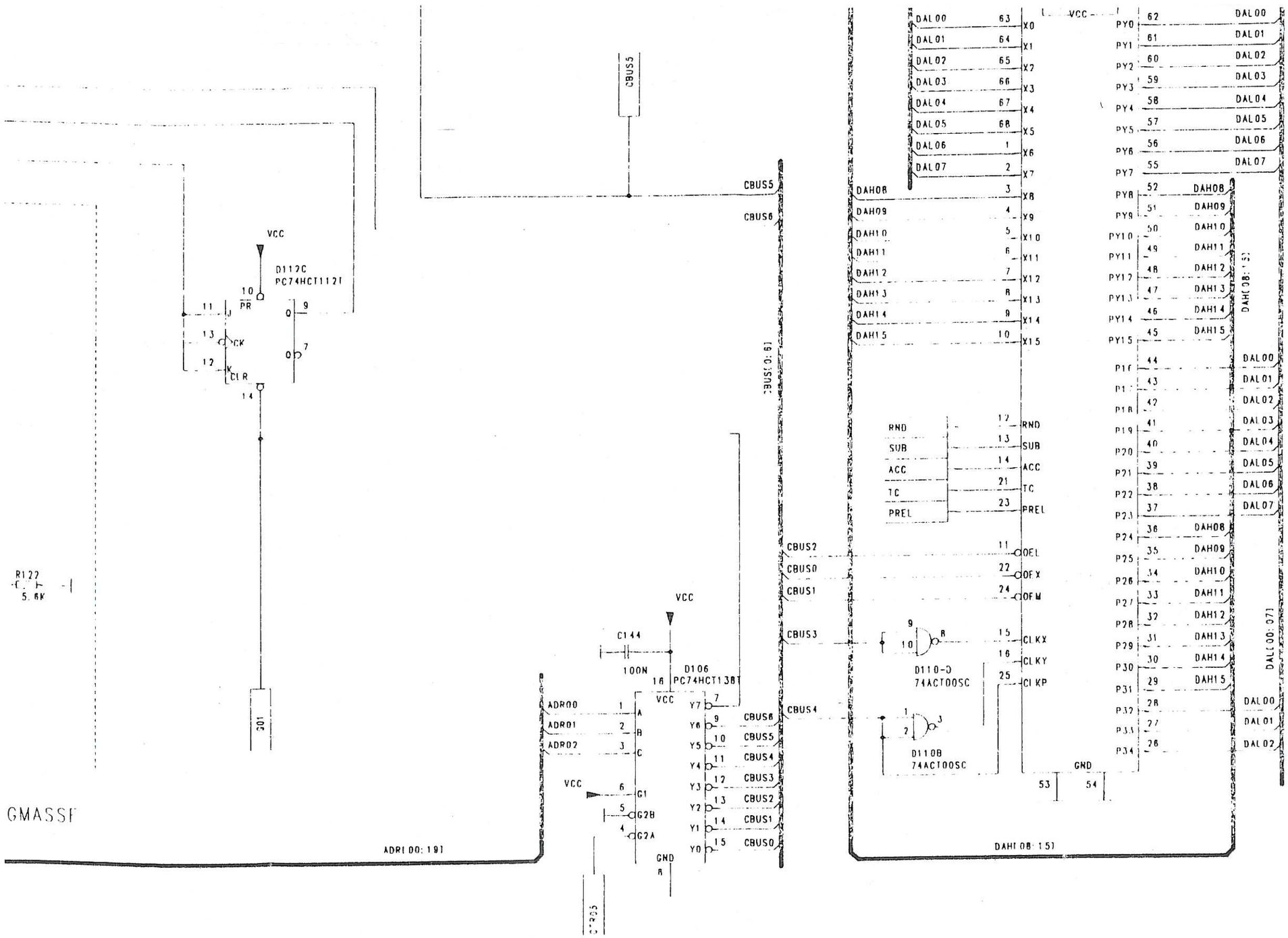

INDEX ISS	À -NR. MODIF	DATUM DATE	NAME NAME				
05	1089.02	22.07.91	VARGA	DESIGNED			
04	1089.13	04.02.91	GRI.	CHECKED	13.07.91	VARGA	
03	0089.01	05.11.90	Kr	DRAWN	25.4.89	FLE	

SCHLUMBERGER
TECHNOLOGIES GMBH
INGOLSTÄDTER STR. 67A
8000 MÜNCHEN 40

BEZEICHNUNG/DESCRIPTION:
COMPUTER

ZEICHNUNGSNR. /DRAWING
361 546
PROJECT/GROUP:
4015 / 250 036.5

DIESE ZEICHNUNG IST UNSER EIGENTUM. VERVIELFÄLTIGUNG, UNBEFUGTE VERWERTUNG, MITTEILUNG AN ANDERE IST STRAFBAR UND SCHADE

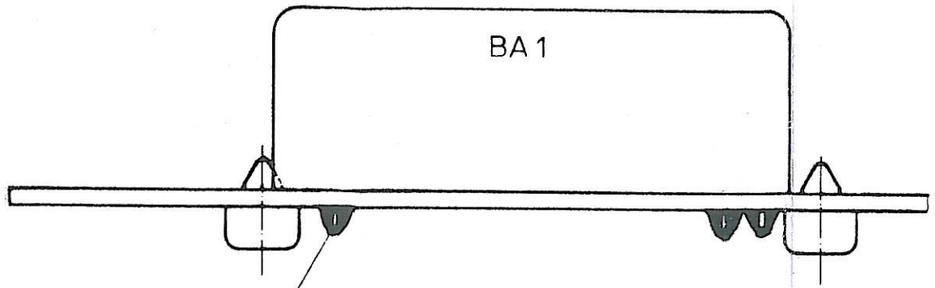

Batterieanschlüsse +/- auf Lötseite
mit 761 021 isoliert

mit Schutzkappe 884 593
abgedeckt

834 963 (2×)
(P5 & P6)

Serien- und Fertigungsnummer
aufgeklebt
Klebeschild Typ 1 NW 10 R 5×16

Reflow gelötet
Hierzu Bauteilklebemaske 461 546 04

914 (2×)
& D16)

834 958 (2×)
(P3 & P4)

884 182

A2,5×0,3×10 DIN7340
708 330 (6×)

884 931
Codierelements A-F vorhanden

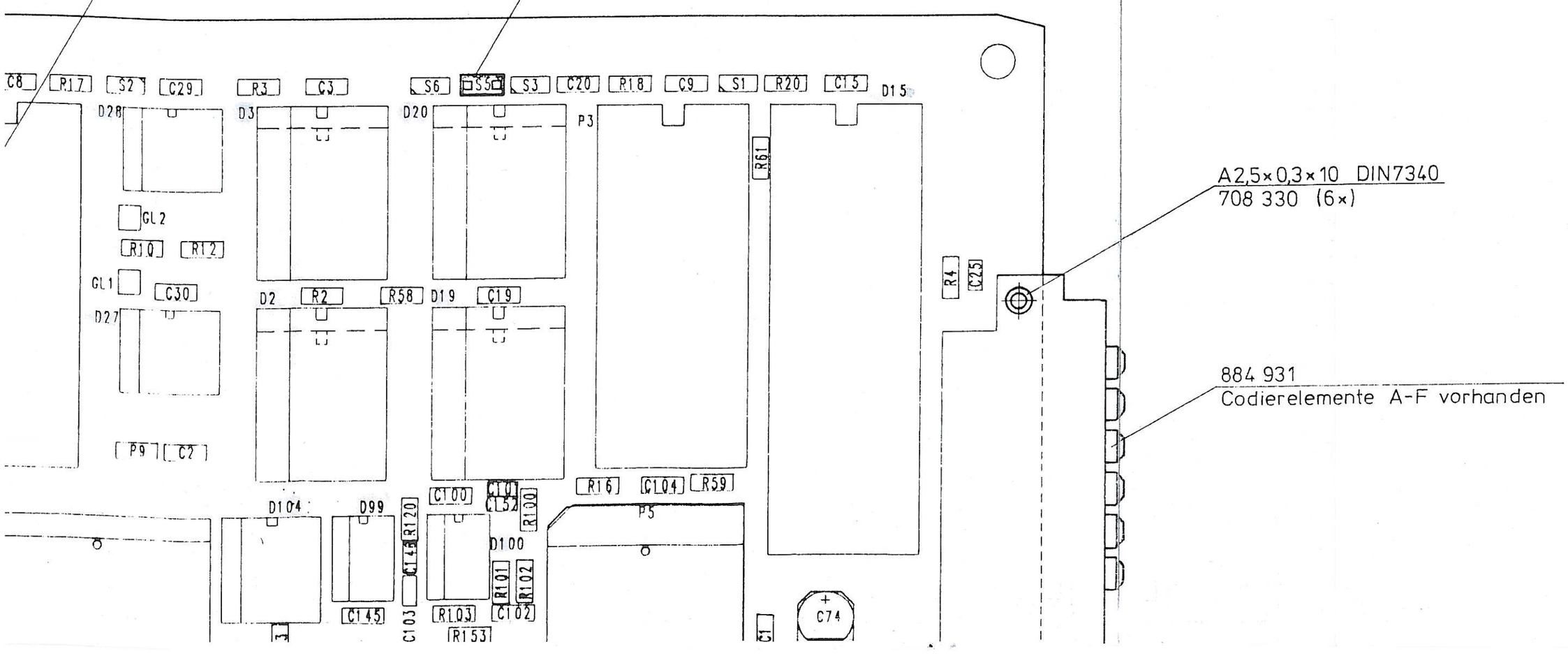

Klebeschild Typ 1 NW 10 R 5×16
selbstzerstörend

501258
(2×)

mit Schutzkappe 884 592
abgedeckt

834 964

834 965

254,7 +0,5

Schaltplanpositionierung = 361 546 S / Sa

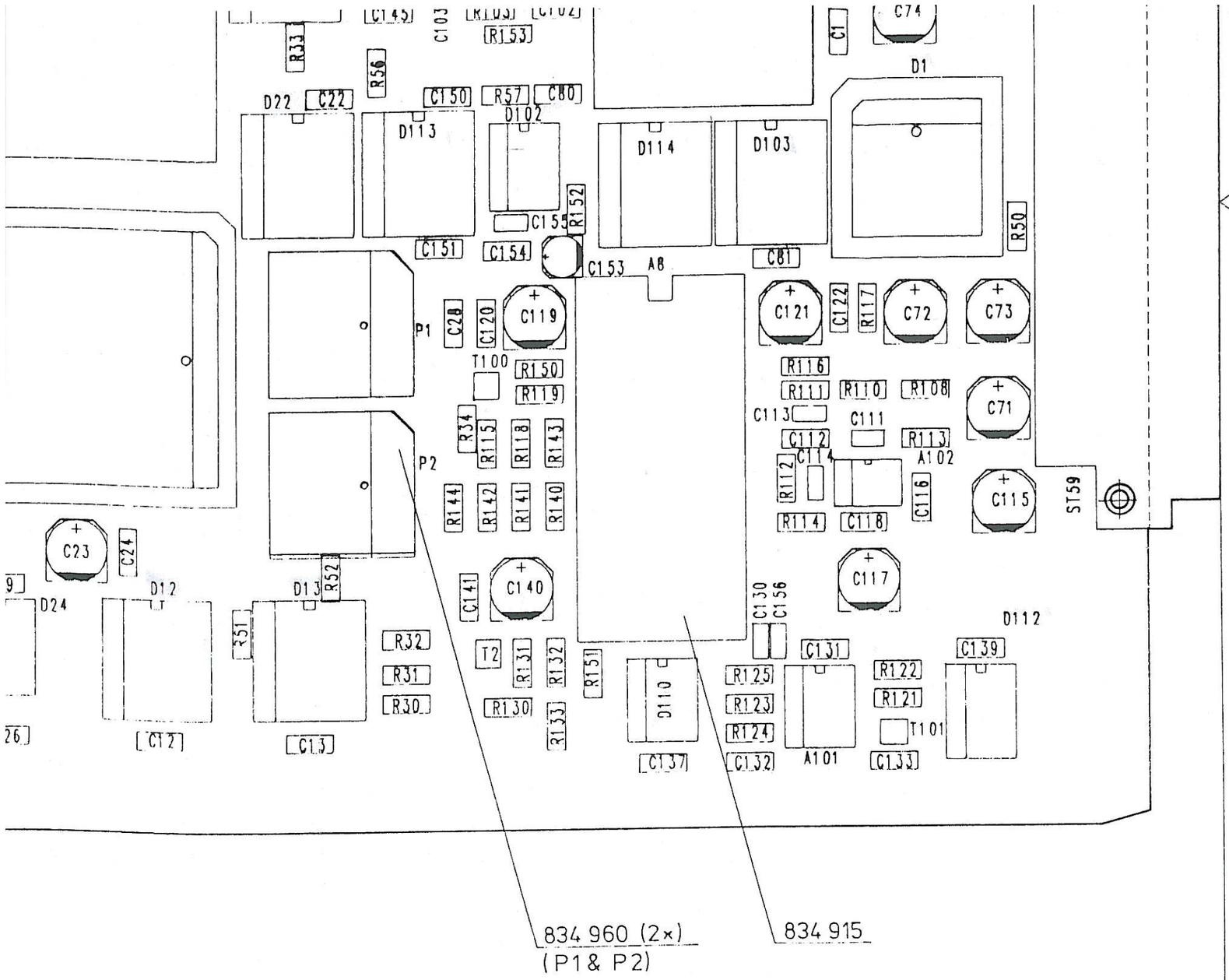

834 960 (2×)
(P1 & P2)

834 915

mit Schutzkappe 884 591
abgedeckt

790 081
M2,5×6 DIN 7985
701 654

1

– Kontrollmaß
Critical measurements

Rev No	Rev Sht	Date	Name	Remarks
09				
08				
07				
06				
05	3089.21	22.11.93	Ba.	
04	2089.8	11.3.92	Gr	
03	1089.13	7.2.'91	Reinh	
02				
01				
00				

Rohteil / Initial part

Werkstoff / Material

Oberfläche / Surface

Freimaß-toleranzen / default tolerance

Scale 2:1

DIN A 1

Schlumberger Technol
Ingolstädter Straße
8000 München 4

Bezeichnung / Description
Bestückte Leit
Typ: COMPUTER

	Date	Name
1991 Drawn	7.2.	Reinhold
Designed		
Checked		

Zeichnungsnr / Drawing No
361 546

Gerät / Unit 4015 / 250 036

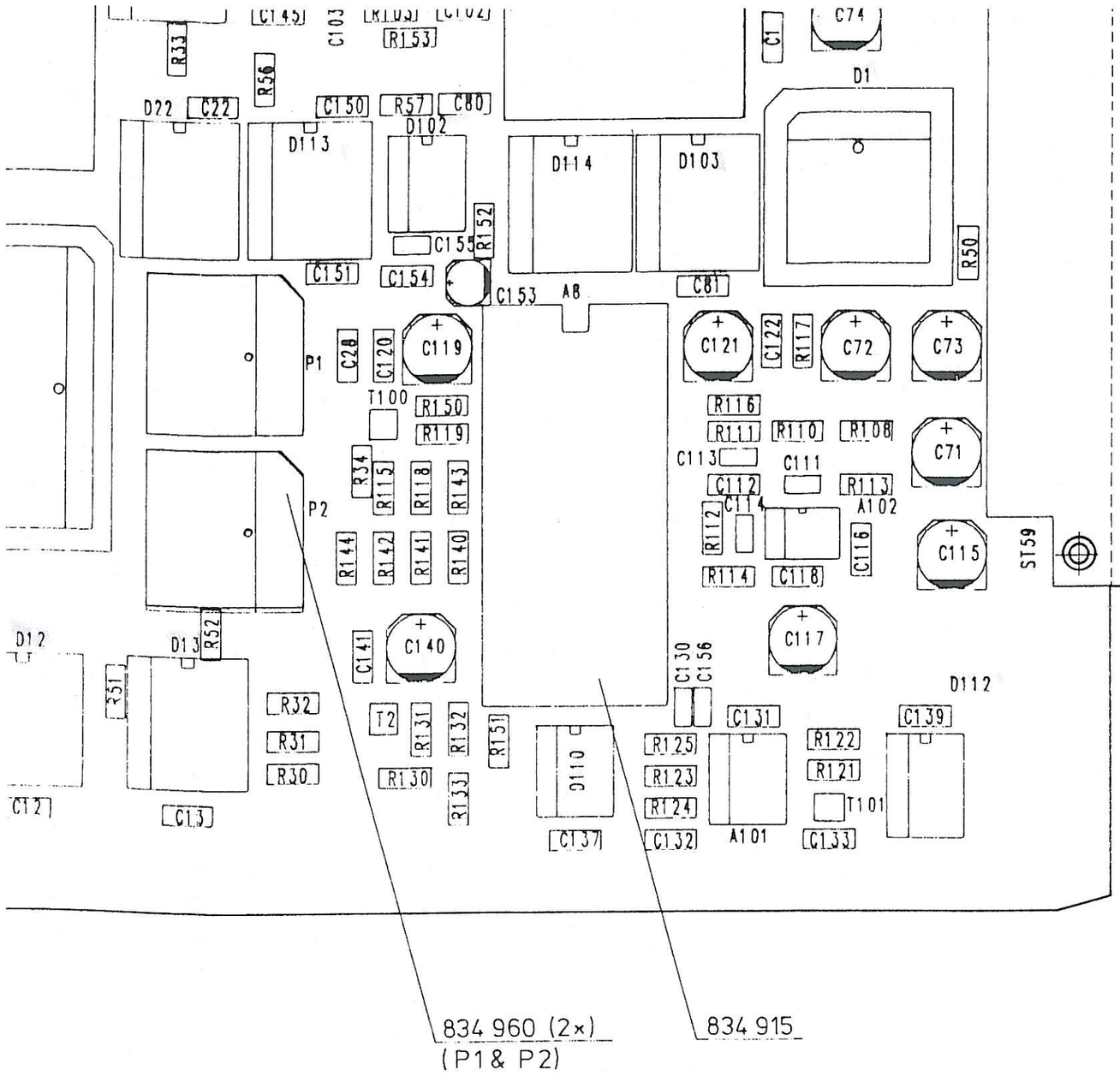

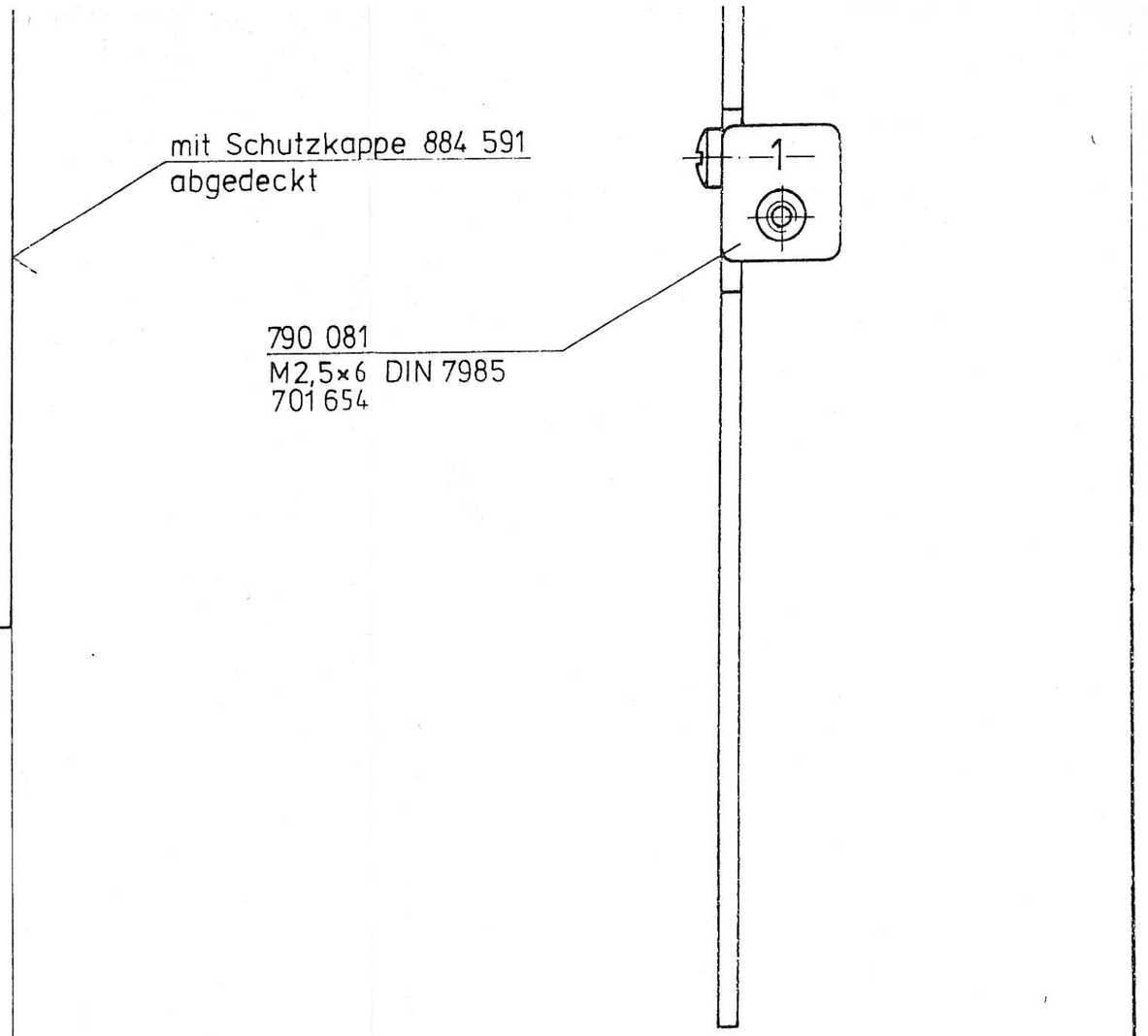

Kontrollmaß
Critical measurements

Rev No	Rev Stat	Date	Name
09			
08			
07			
06			
05	3089.21	22.11.93	Ba.
04	2089.8	12.3.92	Gm
03	1089.13	7.2.'91	Reinh.
02			
01			
00			

Rohteil / Initial part

Werkstoff / Material

Oberfläche / Surface

Freimaßtoleranzen / default tolerance

Scale: 2:1

DIN A1

Schlumberger Technologies GmbH
Ingolstädter Straße 67 a
8000 München 46

Bezeichnung / Description
Bestückte Leiterplatte
Typ: COMPUTER

	Date	Name
1991		
Drawn	7.2.	Reinhold
Designed		
Checked		

Zeichnungsnr / Drawing No
361 546 2/2 F

Gen.Nr / Unit 4015 / 250 036

Pos.	Benennung	Wert	HNK-Nr.	Herst.
A8	12-Bit ADC	AD1678JN	834151	ANAL
A101	Komparator	NE527D	834218	VAL
A102	OPV	AD711KR	835210	ANAL
A105	Spannungswächter	TL7705D	834281	TI
BA1	Batterie DS 2 GT	2.4V	859003	GE
BU26	Federleiste DIN 41612	32polig a/b inv	884535	ERNI
BU27	Federleiste DIN 41612	20polig a/b inv	884534	ERNI
C1	Kondensator X7R	100nF ±10% 50V-	813375	VIT
C2	Kondensator X7R	100nF ±10% 50V-	813375	VIT
C3	Kondensator X7R	100nF ±10% 50V-	813375	VIT
C7	Kondensator X7R	100nF ±10% 50V-	813375	VIT
C8	Kondensator X7R	100nF ±10% 50V-	813375	VIT
C9	Kondensator X7R	100nF ±10% 50V-	813375	VIT
C12	Kondensator X7R	100nF ±10% 50V-	813375	VIT
C13	Kondensator X7R	100nF ±10% 50V-	813375	VIT
C15	Kondensator X7R	100nF ±10% 50V-	813375	VIT
C16	Kondensator X7R	100nF ±10% 50V-	813375	VIT
C18	Kondensator X7R	100nF ±10% 50V-	813375	VIT
C19	Kondensator X7R	100nF ±10% 50V-	813375	VIT
C20	Kondensator X7R	100nF ±10% 50V-	813375	VIT
C21	Kondensator X7R	100nF ±10% 50V-	813375	VIT
C22	Kondensator X7R	100nF ±10% 50V-	813375	VIT
C23	Elko	47µF ±20% 16V-	814386	RÖD
C24	Kondensator X7R	100nF ±10% 50V-	813375	VIT
C25	Kondensator NP0	1nF ±5% 50V-	813247	VIT
C26	Kondensator X7R	100nF ±10% 50V-	813375	VIT

Pos.	Benennung	Wert	HNK-Nr.	Herst
C27	Kondensator X7R	100nF ±10% 50V-	813375	VIT
C28	Kondensator X7R	100nF ±10% 50V-	813375	VIT
C29	Kondensator X7R	100nF ±10% 50V-	813375	VIT
C30	Kondensator X7R	100nF ±10% 50V-	813375	VIT
C36	Kondensator X7R	100nF ±10% 50V-	813375	VIT
C46	Kondensator NP0	100pF ±5% 50V-	813235	VIT
C50	Kondensator X7R	100nF ±10% 50V-	813375	VIT
C51	Kondensator X7R	100nF ±10% 50V-	813375	VIT
C52	Kondensator X7R	100nF ±10% 50V-	813375	VIT
C53	Kondensator X7R	100nF ±10% 50V-	813375	VIT
C54	Kondensator X7R	100nF ±10% 50V-	813375	VIT
C55	Kondensator X7R	100nF ±10% 50V-	813375	VIT
C56	Kondensator X7R	100nF ±10% 50V-	813375	VIT
C57	Kondensator X7R	100nF ±10% 50V-	813375	VIT
C58	Kondensator X7R	100nF ±10% 50V-	813375	VIT
C59	Kondensator X7R	100nF ±10% 50V-	813375	VIT
C60	Kondensator X7R	100nF ±10% 50V-	813375	VIT
C61	Kondensator X7R	100nF ±10% 50V-	813375	VIT
C62	Kondensator X7R	100nF ±10% 50V-	813375	VIT
C63	Kondensator X7R	100nF ±10% 50V-	813375	VIT
C64	Kondensator X7R	100nF ±10% 50V-	813375	VIT
C65	Kondensator X7R	100nF ±10% 50V-	813375	VIT
C66	Kondensator X7R	100nF ±10% 50V-	813375	VIT
C67	Kondensator X7R	100nF ±10% 50V-	813375	VIT
C68	Kondensator X7R	100nF ±10% 50V-	813375	VIT
C69	Kondensator X7R	100nF ±10% 50V-	813375	VIT
C70	Kondensator X7R	100nF ±10% 50V-	813375	VIT
C71	Elko	47µF ±20% 16V-	814386	RÖD
C72	Elko	47µF ±20% 16V-	814386	RÖD

Pos.	Benennung	Wert	HNK-Nr.	Herst.
C73	Elko	47µF ±20% 16V-	814386	RÖD
C74	Elko	47µF ±20% 16V-	814386	RÖD
C77	Kondensator NP0	1nF ±5% 50V-	813247	VIT
C78	Kondensator NP0	100pF ±5% 50V-	813235	VIT
C80	Kondensator X7R	100nF ±10% 50V-	813375	VIT
C81	Kondensator X7R	100nF ±10% 50V-	813375	VIT
C100	Kondensator X7R	100nF ±10% 50V-	813375	VIT
C101	Kondensator NP0	1nF ±5% 50V-	813247	VIT
C102	Kondensator X7R	100nF ±10% 50V-	813375	VIT
C103	Kondensator NP0	33pF ±5% 50V-	813229	VIT
C104	Kondensator X7R	100nF ±10% 50V-	813375	VIT
C105	Elko	4.7µF ±20% 25V-	814372	RÖD
C106	Kondensator X7R	100nF ±10% 50V-	813375	VIT
C107	Elko	22µF ±20% 25V-	814376	RÖD
C108	Kondensator X7R	100nF ±10% 50V-	813375	VIT
C111	Kondensator NP0	1nF ±1% 50V-	813447	VIT
C112	Kondensator NP0	2.2nF ±1% 50V-	813451	VIT
C113	Kondensator NP0	330pF ±5% 50V-	813241	VIT
C114	Kondensator NP0	150pF ±5% 50V-	813237	VIT
C115	Elko	47µF ±20% 16V-	814386	RÖD
C116	Kondensator X7R	100nF ±10% 50V-	813375	VIT
C117	Elko	47µF ±20% 16V-	814386	RÖD
C118	Kondensator X7R	100nF ±10% 50V-	813375	VIT
C119	Elko	47µF ±20% 16V-	814386	RÖD
C120	Kondensator X7R	100nF ±10% 50V-	813375	VIT
C121	Elko	47µF ±20% 16V-	814386	RÖD
C122	Kondensator X7R	100nF ±10% 50V-	813375	VIT
C130	Kondensator X7R	10nF ±10% 50V-	813332	VIT
C131	Kondensator X7R	100nF ±10% 50V-	813375	VIT

Pos.	Benennung	Wert	HNK-Nr.	Herst
C132	Kondensator X7R	100nF ±10% 50V-	813375	VIT
C133	Kondensator X7R	100nF ±10% 50V-	813375	VIT
C136	Kondensator X7R	100nF ±10% 50V-	813375	VIT
C137	Kondensator X7R	100nF ±10% 50V-	813375	VIT
C139	Kondensator X7R	100nF ±10% 50V-	813375	VIT
C140	Elko	47µF ±20% 16V-	814386	RÖD
C141	Kondensator X7R	100nF ±10% 50V-	813375	VIT
C144	Kondensator X7R	100nF ±10% 50V-	813375	VIT
C145	Kondensator X7R	100nF ±10% 50V-	813375	VIT
C146	Kondensator NP0	27pF ±5% 50V-	813228	VIT
C150	Kondensator X7R	100nF ±10% 50V-	813375	VIT
C151	Kondensator X7R	100nF ±10% 50V-	813375	VIT
C152	Kondensator NP0	22pF ±5% 50V-	813227	VIT
C153	Elko	4.7µF ±20% 25V-	814372	RÖD
C154	Kondensator X7R	100nF ±10% 50V-	813375	VIT
C155	Kondensator NP0	330pF ±5% 50V-	813241	VIT
C156	Kondensator NP0	100pF ±5% 50V-	813235	VIT
D1	Timer	N82C54-2	835016	INTEL
D2	32k x 8 CMOS Static RAM	HM62256-10T	834770	HIT
D3	32k x 8 CMOS Static RAM	HM62256-10T	834770	HIT
D7	Multi-Function Peripheral	MC68901FN	835015	MOT
D12	Bidir. Bustreiber	SN74LS645DW	835323	TI
D13	Bidir. Bustreiber	SN74LS645DW	835323	TI
D15	PIA (NMOS)	µPD8255AC-2	835027	NEC
D16	PIA	MC68B21P	835017	MOT
D18	Timer	N82C54-2	835016	INTEL
D19	32k x 8 CMOS Static RAM	HM62256-10T	834770	HIT
D20	32k x 8 CMOS Static RAM	HM62256-10T	834770	HIT

Schlumberger Technologies GmbH				Schaltteilliste	Anz. d. Seiten
05 Index	1089.62 Ä.Nr.	22.07.1991 Datum	VARGA Name	Bestückte Leiterplatte Typ: COMPUTER	10
Erst.: VARGA		Gepr.:		361 546 Sa	Seite Nr
Gerät: 4015 / 250 036					4

Pos.	Benennung	Wert	HNK-Nr.	Herst.
D21	Bidir. Bustreiber	SN74LS645DW	835323	TI
D22	Bidir. Bustreiber	SN74LS645DW	835323	TI
D23	16-Bit Microprozessor	MC68000FN8	835014	MOT
D24	3:8 Decoder	74ACT138SC	835372	NS
D26	2:4 Decoder	74ACT139SC	835373	NS
D27	Nonvolatile Controller	DS1210S	835366	DSC
D28	Nonvolatile Controller	DS1210S	835366	DSC
D50	Graphic-Display Contr.	Z7220A08VSC	835012	ZILOG
D51	Bidir. Bustreiber	PC74HCT245T	835327	VAL
D52	Bidir. Bustreiber	PC74HCT245T	835327	VAL
D53	Bidir. Bustreiber	PC74HCT245T	835327	VAL
D54	Bidir. Bustreiber	PC74HCT245T	835327	VAL
D55	8 Bit Latch	PC74HCT373T	835328	VAL
D56	8 Bit Latch	PC74HCT373T	835328	VAL
D57	32k x 8 CMOS Static RAM	HM62256-10T	834770	HIT
D58	32k x 8 CMOS Static RAM	HM62256-10T	834770	HIT
D59	Bidir. Bustreiber	PC74HCT245T	835327	VAL
D60	Bidir. Bustreiber	PC74HCT245T	835327	VAL
D61	8-bit Schieberegister	PC74HCT165T	835326	VAL
D62	8-bit Schieberegister	PC74HCT165T	835326	VAL
D63	32k x 8 CMOS Static RAM	HM62256-10T	834770	HIT
D64	32k x 8 CMOS Static RAM	HM62256-10T	834770	HIT
D66	NAND-Gatter	74ACT00SC	835332	NS
D67	AND-Gatter	74ACT08SC	835333	NS
D68	OR-Gatter	74ACT32SC	835334	NS
D69	Flip-Flop	PC74HCT74T	834433	VAL
D99	Multivibrator	PC74HC123T	834483	VAL
D100	PLL / VCO	PC74HCT4046AT	834440	VAL
D102	NAND Schmitt-Trigger	PC74HC132T	835368	VAL

Schlumberger Technologies GmbH				Schaltteilliste	Anz. d. Seiten
05 Index	1089.62 Ä.Nr.	22.07.1991 Datum	VARGA Name	Bestückte Leiterplatte Typ: COMPUTER	10
Erst.: VARGA		Gepr.:		361 546 Sa	Seite Nr
Gerät: 4015 / 250 036					5

Pos.	Benennung	Wert	HNK-Nr.	Herst.
D103	8-bit Latch	74ACT377SC	835371	NS
D104	Bidir. Bustreiber	SN74LS645DW	835323	TI
D105	16x16 Multiplizierer	LMA2010JC-1	835013	LOGIC
D106	3:8 Decoder	PC74HCT138T	835325	VAL
D110	NAND-Gatter	74ACT00SC	835332	NS
D112	Flip-Flop	PC74HCT112T	835324	VAL
D113	8 Bit Latch	PC74HCT373T	835328	VAL
D114	8 Bit Latch	PC74HCT373T	835328	VAL
GL1	Diode	BAT54	830498	VAL
GL2	Diode	BAT54	830498	VAL
P1	IC-Sockel	20polig	834960	AMP
P2	IC-Sockel	20polig	834960	AMP
P3	IC-Sockel	32polig	834958	STG
P4	IC-Sockel	32polig	834958	STG
P5	IC-Sockel	44polig	834963	AMP
P6	IC-Sockel	44polig	834963	AMP
Q50	Quarzoszillator	22MHz	853306	DAMO
R2	Chip-Widerstand	10kΩ ±1%	804749	VAL
R3	Chip-Widerstand	10kΩ ±1%	804749	VAL
R4	Chip-Widerstand	10kΩ ±1%	804749	VAL
R5	Chip-Widerstand	10kΩ ±1%	804749	VAL
R6	Chip-Widerstand	10kΩ ±1%	804749	VAL
R7	Chip-Widerstand	10kΩ ±1%	804749	VAL
R8	Chip-Widerstand	10kΩ ±1%	804749	VAL
R9	Chip-Widerstand	820Ω ±1%	804736	VAL

Schlumberger Technologies GmbH				Schaltteilliste	Anz. d. Seiten
05 Index	1089.62 Ä.Nr.	22.07.1991 Datum	VARGA Name	Bestückte Leiterplatte Typ: COMPUTER	10
Erst.: VARGA		Gepr.:		361 546 Sa	Seite Nr
Gerät: 4015 / 250 036					6

Pos.	Benennung	Wert	HNK-Nr.	Herst.
R10	Chip-Widerstand	820Ω ±1%	804736	VAL
R11	Chip-Widerstand	10kΩ ±1%	804749	VAL
R12	Chip-Widerstand	100Ω ±1%	804725	VAL
R13	Chip-Widerstand	10kΩ ±1%	804749	VAL
R14	Chip-Widerstand	10kΩ ±1%	804749	VAL
R15	Chip-Widerstand	10kΩ ±1%	804749	VAL
R16	Chip-Widerstand	10kΩ ±1%	804749	VAL
R17	Chip-Widerstand	10kΩ ±1%	804749	VAL
R18	Chip-Widerstand	10kΩ ±1%	804749	VAL
R20	Chip-Widerstand	10kΩ ±1%	804749	VAL
R21	Chip-Widerstand	10kΩ ±1%	804749	VAL
R25	Chip-Widerstand	4.7kΩ ±1%	804745	VAL
R26	Chip-Widerstand	4.7kΩ ±1%	804745	VAL
R27	Chip-Widerstand	4.7kΩ ±1%	804745	VAL
R28	Chip-Widerstand	4.7kΩ ±1%	804745	VAL
R29	Chip-Widerstand	4.7kΩ ±1%	804745	VAL
R30	Chip-Widerstand	4.7kΩ ±1%	804745	VAL
R31	Chip-Widerstand	4.7kΩ ±1%	804745	VAL
R32	Chip-Widerstand	4.7kΩ ±1%	804745	VAL
R33	Chip-Widerstand	10kΩ ±1%	804749	VAL
R34	Chip-Widerstand	10kΩ ±1%	804749	VAL
R36	Chip-Widerstand	10kΩ ±1%	804749	VAL
R37	Chip-Widerstand	10kΩ ±1%	804749	VAL
R38	Chip-Widerstand	10kΩ ±1%	804749	VAL
R39	Chip-Widerstand	10kΩ ±1%	804749	VAL
R40	Chip-Widerstand	10kΩ ±1%	804749	VAL
R41	Chip-Widerstand	10kΩ ±1%	804749	VAL
R42	Chip-Widerstand	10kΩ ±1%	804749	VAL
R43	Chip-Widerstand	10kΩ ±1%	804749	VAL

Schlumberger Technologies GmbH				Schaltteilliste	Anz. d. Seiten
05 Index	1089.62 Ä.Nr.	22.07.1991 Datum	VARGA Name	Bestückte Leiterplatte Typ: COMPUTER	10
Erst.: VARGA		Gepr.:		361 546 Sa	Seite Nr
Gerät: 4015 / 250 036					7

Pos.	Benennung	Wert	HNK-Nr.	Herst.
R44	Chip-Widerstand	10kΩ ±1%	804749	VAL
R46	Chip-Widerstand	100Ω ±1%	804725	VAL
R47	Chip-Widerstand	10kΩ ±1%	804749	VAL
R48	Chip-Widerstand	3.3kΩ ±1%	804743	VAL
R49	Chip-Widerstand	3.3kΩ ±1%	804743	VAL
R50	Chip-Widerstand	10Ω ±5%	804713	VAL
R51	Chip-Widerstand	330Ω ±1%	804731	VAL
R52	Chip-Widerstand	330Ω ±1%	804731	VAL
R53	Chip-Widerstand	2.7kΩ ±1%	804742	VAL
R54	Chip-Widerstand	1.5kΩ ±1%	804739	VAL
R55	Chip-Widerstand	330Ω ±1%	804731	VAL
R56	Chip-Widerstand	330Ω ±1%	804731	VAL
R57	Chip-Widerstand	6.8kΩ ±1%	804747	VAL
R58	Chip-Widerstand	3.3kΩ ±1%	804743	VAL
R59	Chip-Widerstand	3.3kΩ ±1%	804743	VAL
R60	Chip-Widerstand	3.3kΩ ±1%	804743	VAL
R61	Chip-Widerstand	3.3kΩ ±1%	804743	VAL
R62	Chip-Widerstand	10kΩ ±1%	804749	VAL
R63	Chip-Widerstand	10kΩ ±1%	804749	VAL
R64	Chip-Widerstand	10kΩ ±1%	804749	VAL
R100	Chip-Widerstand	4.7kΩ ±1%	804745	VAL
R101	Chip-Widerstand	10kΩ ±1%	804749	VAL
R102	Chip-Widerstand	470Ω ±1%	804733	VAL
R103	Chip-Widerstand	3.3kΩ ±1%	804743	VAL
R104	Chip-Widerstand	10kΩ ±1%	804749	VAL
R105	Chip-Widerstand	10kΩ ±1%	804749	VAL
R106	Chip-Widerstand	10kΩ ±1%	804749	VAL
R107	Chip-Widerstand	10kΩ ±1%	804749	VAL
R108	Chip-Widerstand	100kΩ ±1%	804761	VAL

Pos.	Benennung	Wert	HNK-Nr.	Herst.
R109	Chip-Widerstand	10kΩ ±1%	804749	VAL
R110	Chip-Widerstand	15kΩ ±1%	804751	VAL
R111	Chip-Widerstand	15kΩ ±1%	804751	VAL
R112	Chip-Widerstand	15kΩ ±1%	804751	VAL
R113	Chip-Widerstand	10Ω ±5%	804713	VAL
R114	Chip-Widerstand	10Ω ±5%	804713	VAL
R115	Chip-Widerstand	47Ω ±5%	804721	VAL
R116	Chip-Widerstand	3.3kΩ ±1%	804743	VAL
R117	Chip-Widerstand	10Ω ±5%	804713	VAL
R118	Chip-Widerstand	2.2kΩ ±1%	804741	VAL
R119	Chip-Widerstand	12kΩ ±1%	804750	VAL
R120	Chip-Widerstand	2.2kΩ ±1%	804741	VAL
R121	Chip-Widerstand	5.6kΩ ±1%	804746	VAL
R122	Chip-Widerstand	5.6kΩ ±1%	804746	VAL
R123	Chip-Widerstand	10kΩ ±1%	804749	VAL
R124	Chip-Widerstand	10kΩ ±1%	804749	VAL
R125	Chip-Widerstand	180Ω ±1%	804728	VAL
R126	Chip-Widerstand	10kΩ ±1%	804749	VAL
R127	Chip-Widerstand	10kΩ ±1%	804749	VAL
R128	Chip-Widerstand	10kΩ ±1%	804749	VAL
R129	Chip-Widerstand	10kΩ ±1%	804749	VAL
R130	Chip-Widerstand	68Ω ±5%	804723	VAL
R131	Chip-Widerstand	2.2kΩ ±1%	804741	VAL
R132	Chip-Widerstand	12kΩ ±1%	804750	VAL
R133	Chip-Widerstand	470Ω ±1%	804733	VAL
R134	Chip-Widerstand	10kΩ ±1%	804749	VAL
R135	Chip-Widerstand	10kΩ ±1%	804749	VAL
R136	Chip-Widerstand	10kΩ ±1%	804749	VAL
R137	Chip-Widerstand	10kΩ ±1%	804749	VAL

Pos.	Benennung	Wert	HNK-Nr.	Herst.
R138	Chip-Widerstand	10kΩ ±1%	804749	VAL
R139	Chip-Widerstand	10kΩ ±1%	804749	VAL
R140	Chip-Widerstand	100Ω ±1%	804725	VAL
R141	Chip-Widerstand	100Ω ±1%	804725	VAL
R142	Chip-Widerstand	100Ω ±1%	804725	VAL
R143	Chip-Widerstand	470Ω ±1%	804733	VAL
R144	Chip-Widerstand	100Ω ±1%	804725	VAL
R145	Chip-Widerstand	10kΩ ±1%	804749	VAL
R146	Chip-Widerstand	10kΩ ±1%	804749	VAL
R147	Chip-Widerstand	10kΩ ±1%	804749	VAL
R148	Chip-Widerstand	10kΩ ±1%	804749	VAL
R149	Chip-Widerstand	10kΩ ±1%	804749	VAL
R150	Chip-Widerstand	3.3kΩ ±1%	804743	VAL
R151	Chip-Widerstand	3.3kΩ ±1%	804743	VAL
R152	Chip-Widerstand	3.3kΩ ±1%	804743	VAL
R153	Chip-Widerstand	3.3kΩ ±1%	804743	VAL
S1	Wire-Wrap Stiftleiste	2polig	884179	COM
S2	Wire-Wrap Stiftleiste	2polig	884179	COM
S3	Wire-Wrap Stiftleiste	2polig	884179	COM
S4	Wire-Wrap Stiftleiste	2polig	884179	COM
S5	Wire-Wrap Stiftleiste	2polig	884179	COM
S6	Wire-Wrap Stiftleiste	2polig	884179	COM
ST59	Messerleiste DIN 41612	96polig a/b/c	884510	SIE
T2	NPN Transistor	BC850B	832284	SIE
T100	PNP Transistor	BC860B	832285	VAL
T101	PNP Transistor	BC860B	832285	VAL