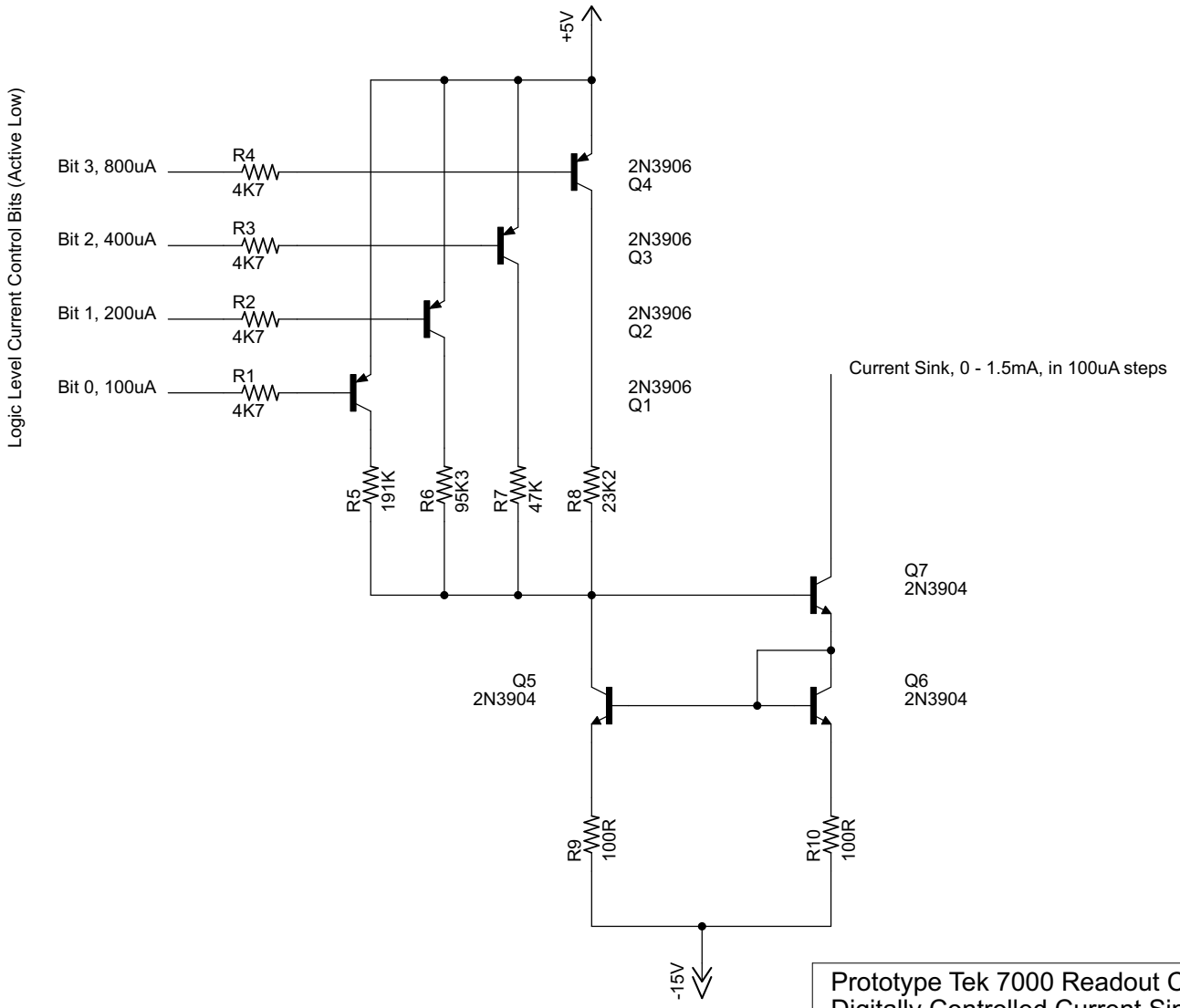

Prototype Tek 7000 Readout Column/Row
Digitally Controlled Current Sink

TITLE: readout_current_sink_v1

Document Number:

REV:

Date: 7/28/21 8:46 AM

Sheet: 1/1