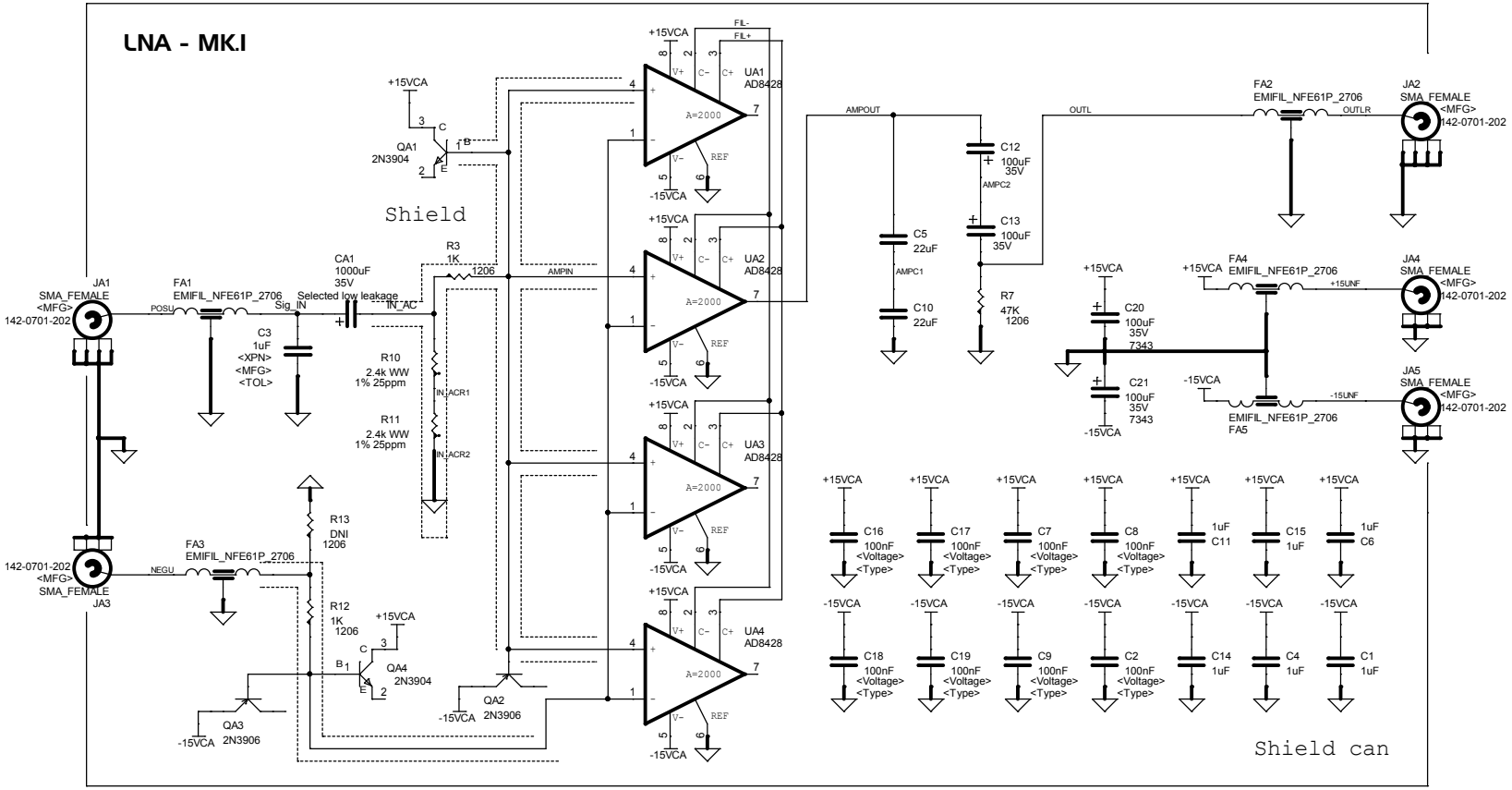

Title	<Title>	
Size A3	Document Number <Doc>	Rev <RevCode>
Date: Sunday, October 30, 2016	Sheet 6 of 10	