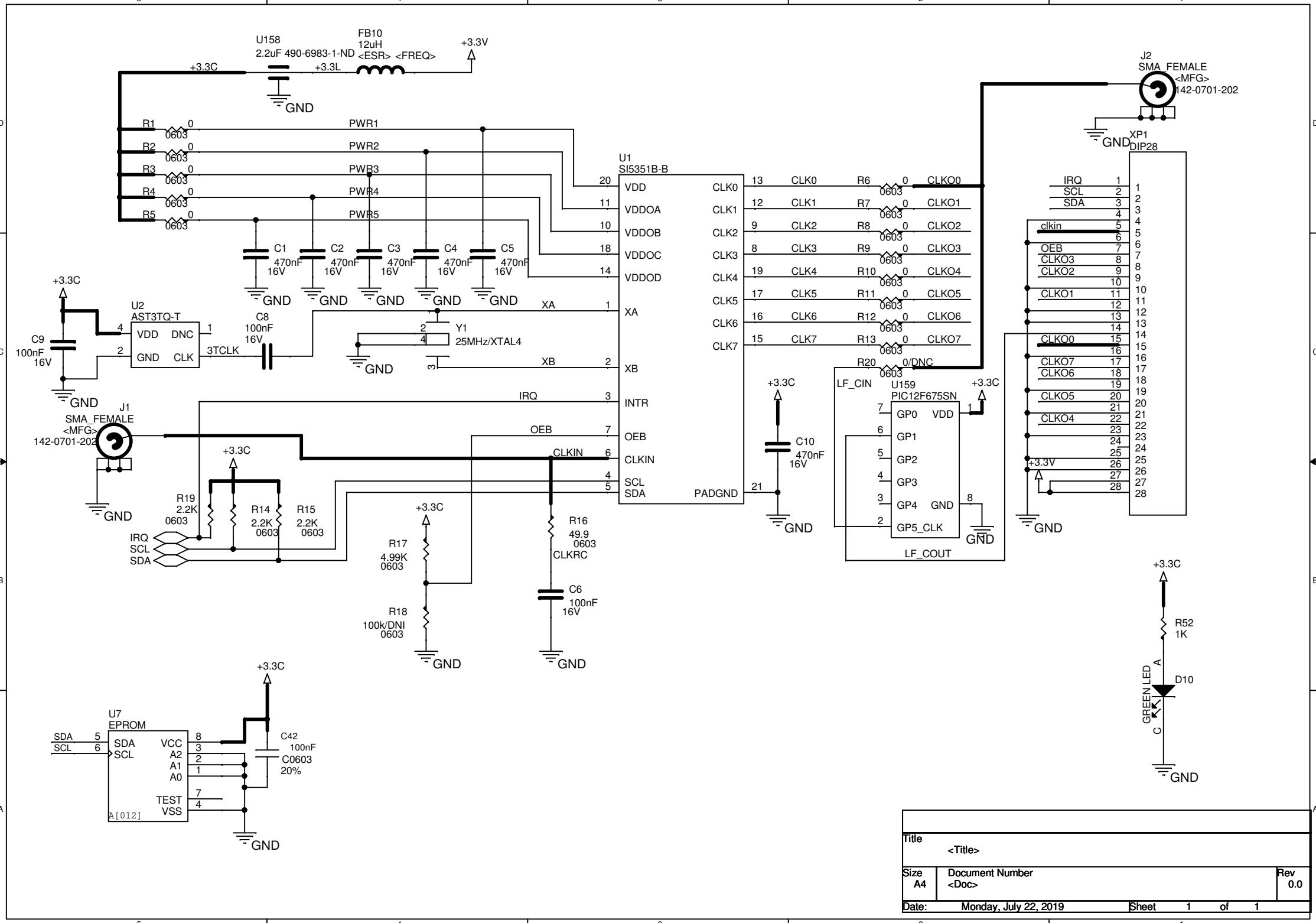

Title <Title>		
Size A4	Document Number <Doc>	Rev 0.0
Date: Monday, July 22, 2019	Sheet 1 of 1	