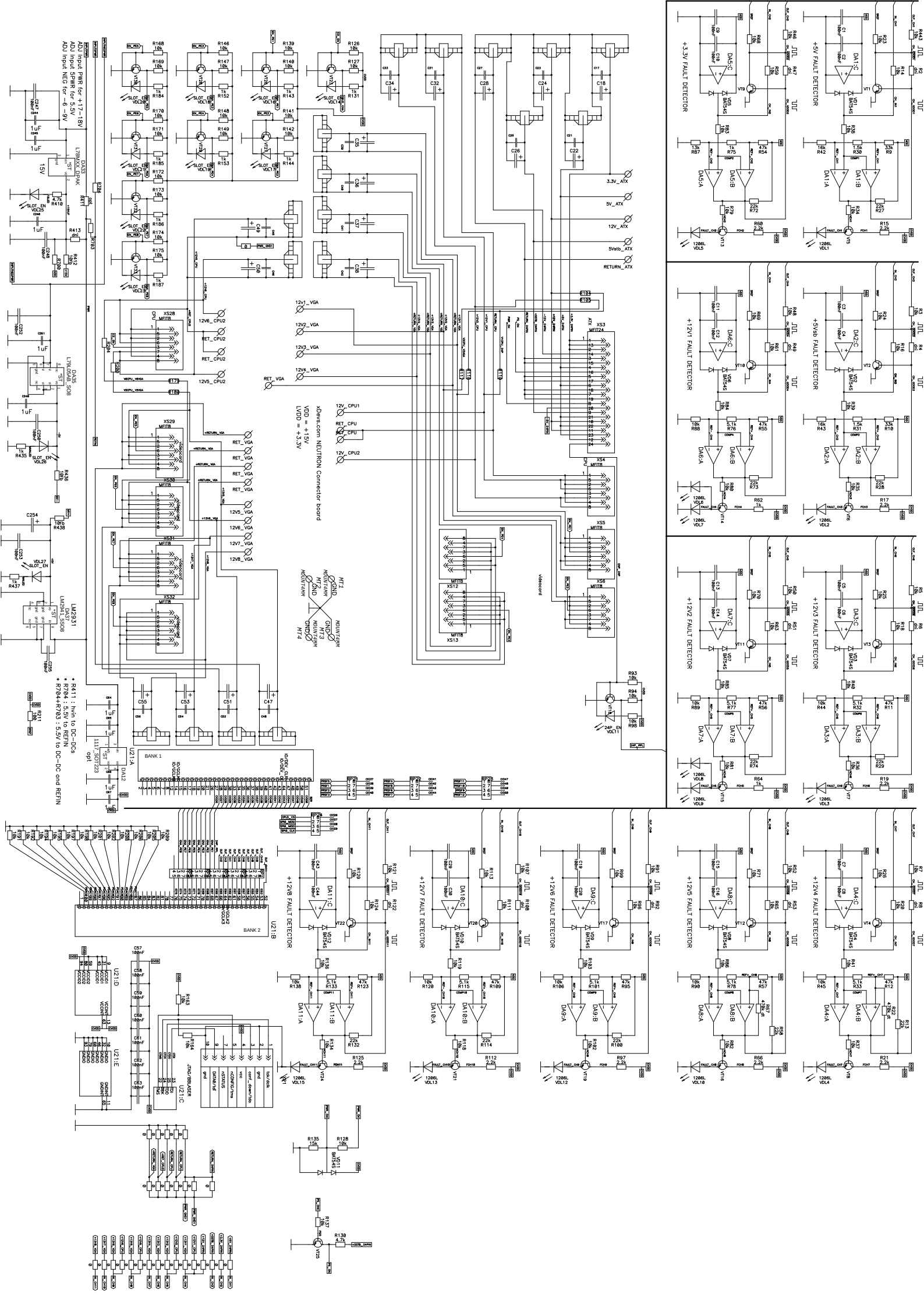
xDevs.com NEUTRON Connector board
VDD = +15V
LVDD = +3.3V
+3.3V FAULT DETECTOR
+5V FAULT DETECTOR
+12V1 FAULT DETECTOR
+5Vsb FAULT DETECTOR
+12V2 FAULT DETECTOR
+12V3 FAULT DETECTOR
+12V8 FAULT DETECTOR
+12V7 FAULT DETECTOR
+12V6 FAULT DETECTOR
+12V5 FAULT DETECTOR
+12V4 FAULT DETECTOR
3.3V_ATX
5V_ATX
12V_ATX
5Vsb_ATX
RETURN_ATX
12V1_VGA
12V2_VGA
12V3_VGA
12V4_VGA
RET_VGA
12V_CPU1
RET_CPU
12V_CPU2
12V6_CPU2
RET_CPU2
12V5_CPU2
12V5_VGA
12V6_VGA
12V7_VGA
12V8_VGA
ADJ Input PWR for +17~18V
ADJ Input SPWR for 5.5V
ADJ Input NEG for -6 ~ -9V
* R411 : hiin to DC-DC3
* R704+R703 : 5.5V to DC-DC and REFIN
BANK 1
BANK 2
JTAG/BBLASER

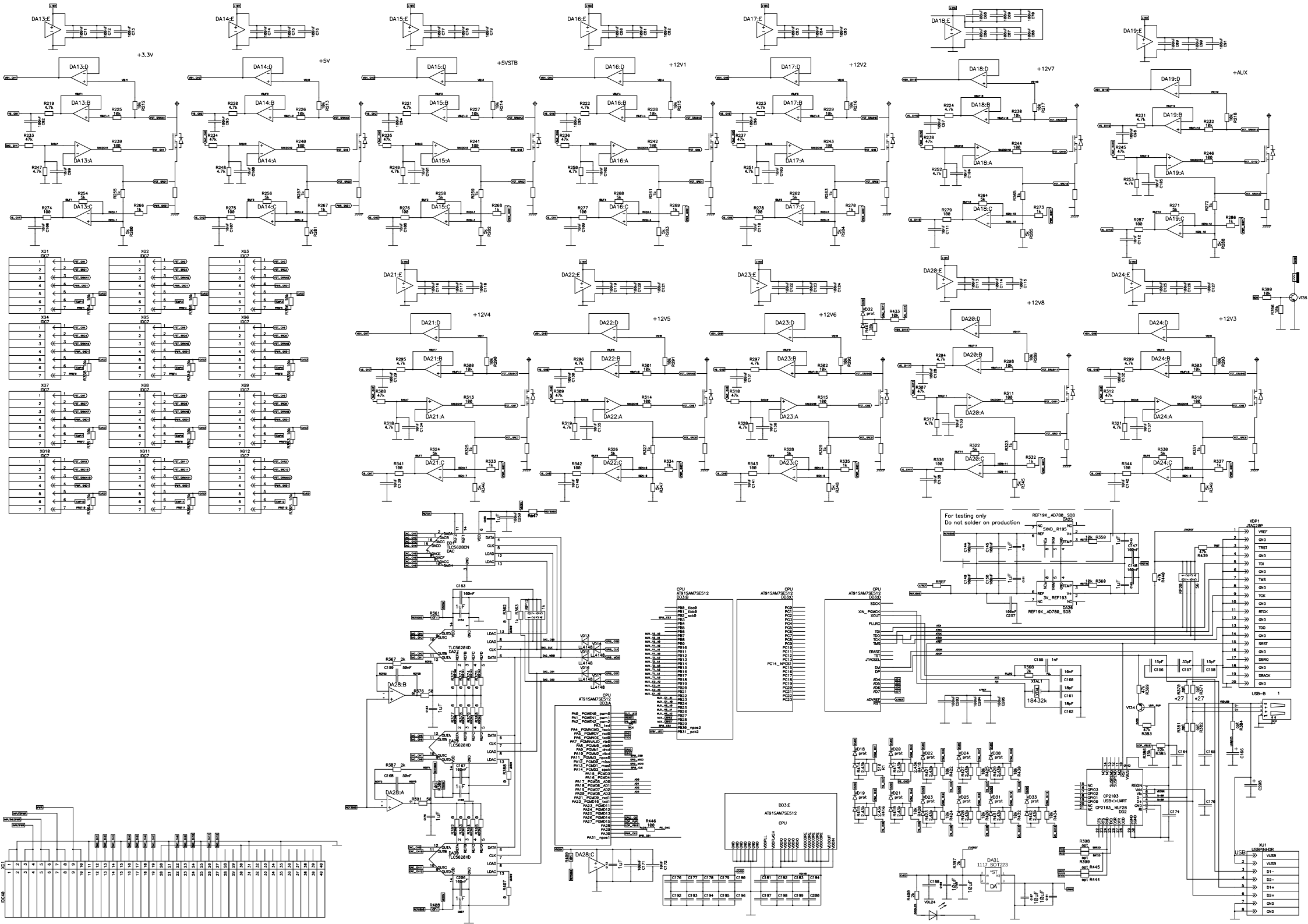
+3.3V
+5V
+5VSTB
+12V1
+12V2
+12V7
+AUX
+12V4
+12V5
+12V6
+12V8
+12V3
For testing only
Do not solder on production
CPU
AT91SAM7SE512
TLC5620CN
TLC5620XD
CP2103
USB<>UART
USB-B
USB
XDP1
JTAG20P
XU1
USBPINHDR
XG1
XG2
XG3
XG4
XG5
XG6
XG7
XG8
XG9
XG10
XG11
XG12
XO1
IDC40

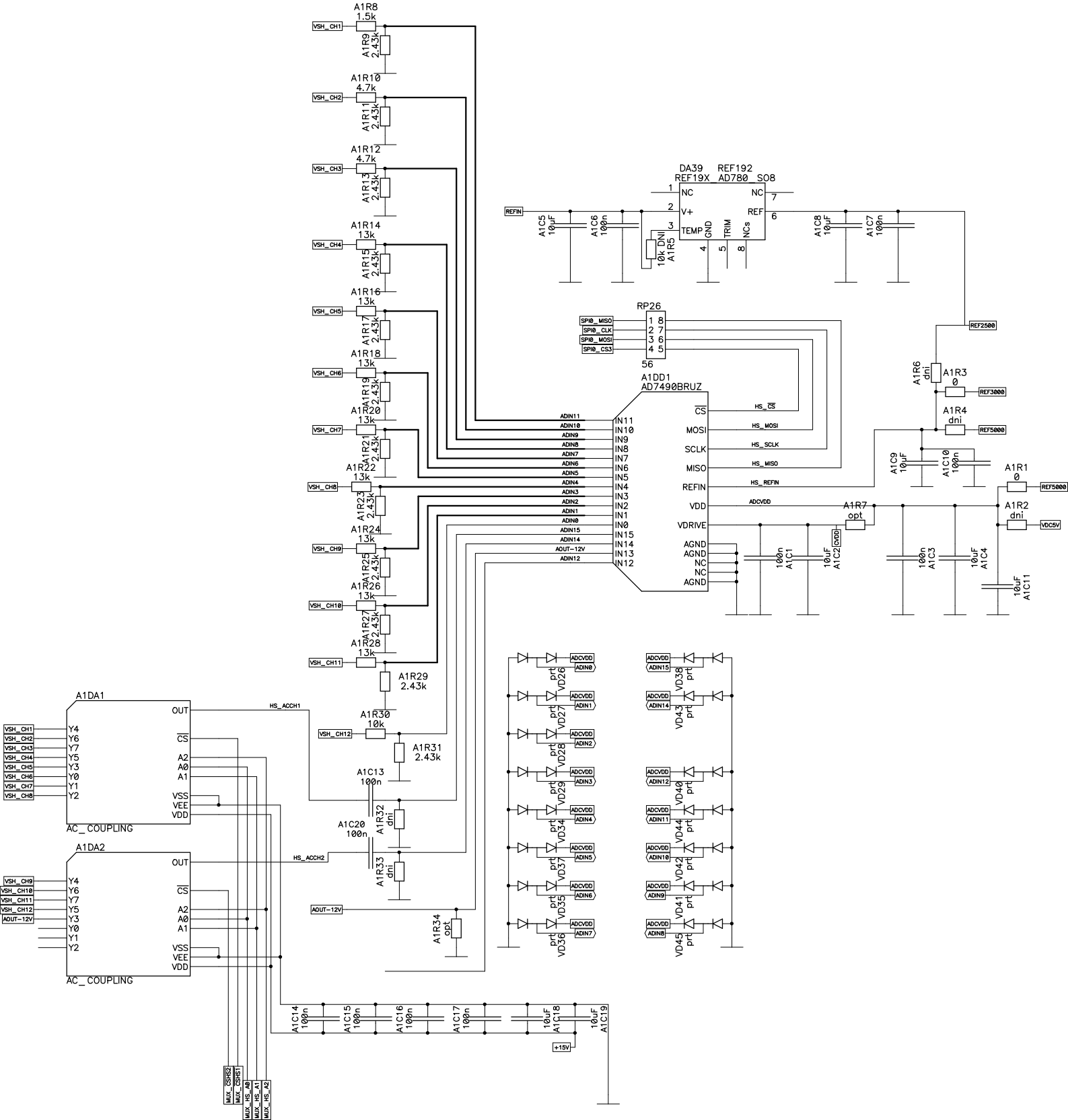
A1R8 1.5k
A1R9 2.43k
A1R10 4.7k
A1R11 2.43k
A1R12 4.7k
A1R13 2.43k
A1R14 13k
A1R15 2.43k
A1R16 13k
A1R17 2.43k
A1R18 13k
A1R19 2.43k
A1R20 13k
A1R21 2.43k
A1R22 13k
A1R23 2.43k
A1R24 13k
A1R25 2.43k
A1R26 13k
A1R27 2.43k
A1R28 13k
A1R29 2.43k
A1R30 10k
A1R31 2.43k
A1R32 dni
A1R33 dni
A1R34 opt
A1R5 10k DNI
DA39 REF192
REF19X AD780 SO8
NC
V+
TEMP
GND
TRIM
NCs
REF
A1C5 10µF
A1C6 100n
A1C8 10µF
A1C7 100n
RP26
A1DD1
AD7490BRUZ
CS
MOSI
SCLK
MISO
REFIN
VDD
VDRIVE
AGND
A1R6 dni
A1R3 0
A1R4 dni
A1R1 0
A1R2 dni
A1R7 opt
A1C9 10µF
A1C10 100n
A1C1 100n
A1C2 10uF
A1C3 100n
A1C4 10uF
A1C11 10uF
A1DA1
A1DA2
AC_COUPLING
OUT
CS
A2
A0
A1
VSS
VEE
VDD
HS_ACCH1
HS_ACCH2
A1C13 100n
A1C20 100n
A1C14 100n
A1C15 100n
A1C16 100n
A1C17 100n
A1C18 10uF
A1C19 10uF
+15V
MUX_CSHS2
MUX_CSHS1
MUX_HS_A0
MUX_HS_A1
MUX_HS_A2

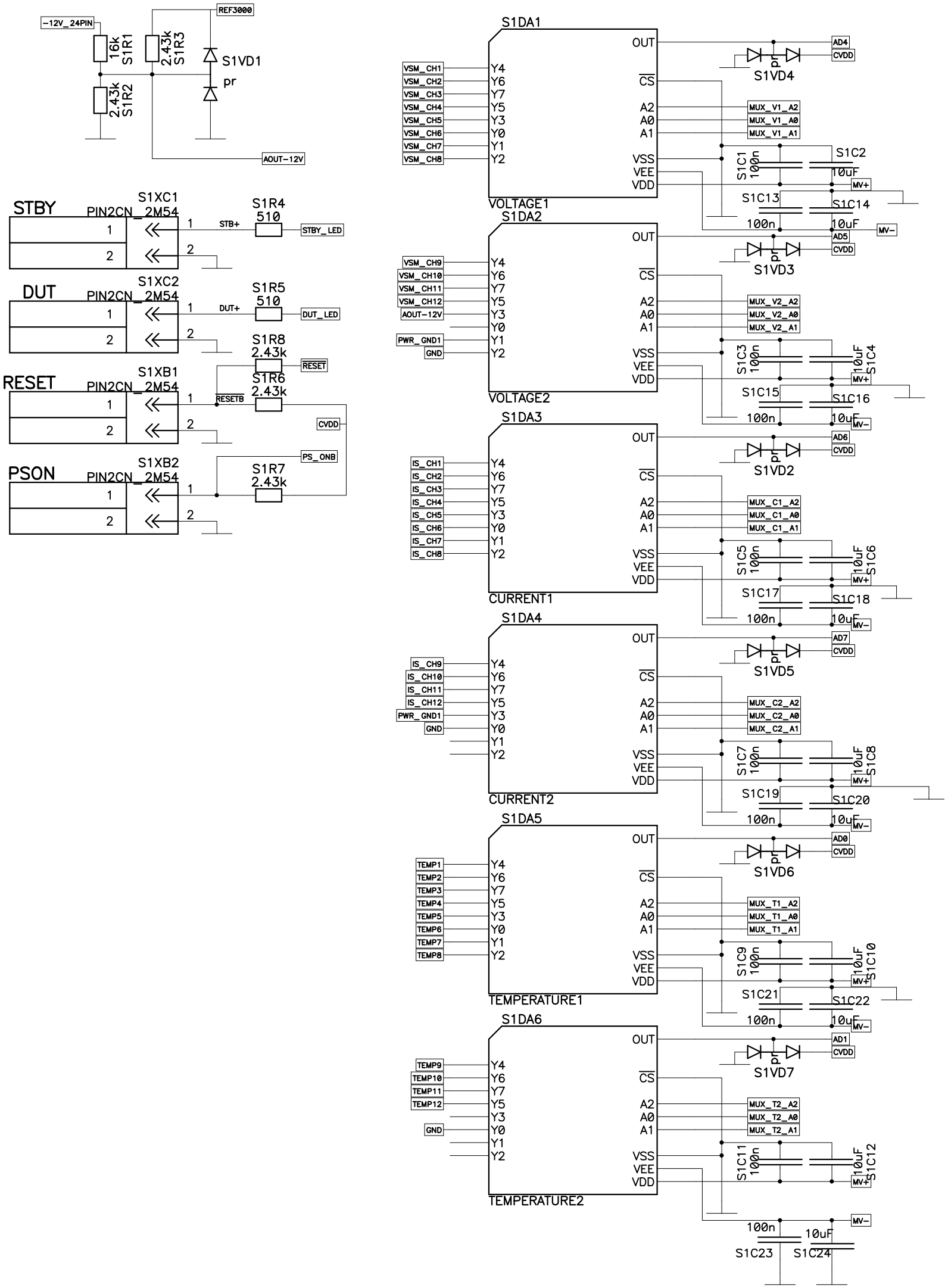
-12V_24PIN
16k S1R1
2.43k S1R2
2.43k S1R3
REF3000
S1VD1
pr
AOUT-12V
STBY
S1XC1
PIN2CN_2M54
S1R4 510
STB+
STBY_LED
DUT
S1XC2
PIN2CN_2M54
S1R5 510
DUT+
DUT_LED
S1R8 2.43k
RESET
RESET
S1XB1
PIN2CN_2M54
S1R6 2.43k
RESETB
CVDD
PS_ONB
PSON
S1XB2
PIN2CN_2M54
S1R7 2.43k
S1DA1
VOLTAGE1
VSM_CH1
VSM_CH2
VSM_CH3
VSM_CH4
VSM_CH5
VSM_CH6
VSM_CH7
VSM_CH8
AD4
S1VD4
MUX_V1_A2
MUX_V1_A0
MUX_V1_A1
S1C1 100n
S1C2 10uF
MV+
S1C13 100n
S1C14 10uF
MV-
S1DA2
VOLTAGE2
VSM_CH9
VSM_CH10
VSM_CH11
VSM_CH12
AOUT-12V
PWR_GND1
GND
AD5
S1VD3
MUX_V2_A2
MUX_V2_A0
MUX_V2_A1
S1C3 100n
S1C4 10uF
S1C15 100n
S1C16 10uF
S1DA3
CURRENT1
IS_CH1
IS_CH2
IS_CH3
IS_CH4
IS_CH5
IS_CH6
IS_CH7
IS_CH8
AD6
S1VD2
MUX_C1_A2
MUX_C1_A0
MUX_C1_A1
S1C5 100n
S1C6 10uF
S1C17 100n
S1C18 10uF
S1DA4
CURRENT2
IS_CH9
IS_CH10
IS_CH11
IS_CH12
PWR_GND1
GND
AD7
S1VD5
MUX_C2_A2
MUX_C2_A0
MUX_C2_A1
S1C7 100n
S1C8 10uF
S1C19 100n
S1C20 10uF
S1DA5
TEMPERATURE1
TEMP1
TEMP2
TEMP3
TEMP4
TEMP5
TEMP6
TEMP7
TEMP8
AD0
S1VD6
MUX_T1_A2
MUX_T1_A0
MUX_T1_A1
S1C9 100n
S1C10 10uF
S1C21 100n
S1C22 10uF
S1DA6
TEMPERATURE2
TEMP9
TEMP10
TEMP11
TEMP12
GND
AD1
S1VD7
MUX_T2_A2
MUX_T2_A0
MUX_T2_A1
S1C11 100n
S1C12 10uF
100n
10uF
S1C23
S1C24